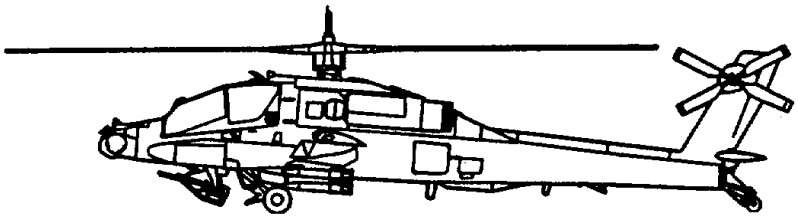

TECHNICAL MANUAL

BATTLEFIELD DAMAGE ASSESSMENT AND REPAIR

FOR
HELICOPTER, ATTACK,
AH-64A APACHE
(NSN 1520-01-106-9519)
(EIC: RHA)

CHAPTER 1 GENERAL INFORMATION
CHAPTER 2 AIRFRAME
CHAPTER 3 LANDING GEAR SYSTEM
CHAPTER 4 POWER PLANT INSTALLATION SYSTEM
CHAPTER 5 ROTOR SYSTEM
CHAPTER 6 DRIVE SYSTEM
CHAPTER 7 HYDRAULIC AND PNEUMATIC SYSTEMS
CHAPTER 8 INSTRUMENTS
CHAPTER 9 ELECTRICAL SYSTEM
CHAPTER 10 FUEL SYSTEM
CHAPTER 11 FLIGHT CONTROL SYSTEM
CHAPTER 12 UTILITY SYSTEMS
CHAPTER 13 ENVIRONMENTAL CONTROL SYSTEM
CHAPTER 14 HOISTS AND WINCHES
CHAPTER 15 AUXILIARY POWER UNIT
CHAPTER 16 MISSION EQUIPMENT
CHAPTER 17 EMERGENCY EQUIPMENT
CHAPTER 18 AVIONICS
CHAPTER 19 AREA WEAPONS SYSTEM
APPENDIX A REFERENCES
APPENDIX B SPECIAL TOOLS LIST
APPENDIX C EXPENDABLE SUPPLIES AND MATERIALS
APPENDIX D CANNIBALIZATION
APPENDIX E SUBSTITUTE MATERIALS AND PARTS
APPENDIX F MISSION CAPABILITIES
GLOSSARY
ALPHABETICAL INDEX

DISTRIBUTION STATEMENT A.
Approved for public release;
distribution is unlimited.

HEADQUARTERS, DEPARTMENT OF THE ARMY

15 MARCH 1996

WARNING

Personnel performing operations, procedures, and practices which are included or implied in this technical manual shall observe the following warnings. Disregard of these warnings and precautionary information can cause serious injury and death.

WARNING

The standards contained herein allow aircraft to be flown with battle damage substantially in excess of peacetime limits. Under no circumstances shall this manual be used wholly or in part for peacetime maintenance of the aircraft. Assessment of aircraft battle-damage requires extreme care and diligence and strict adherence to the instructions and standards contained in this manual. If at any stage of damage assessment the assessor believes that oversights or errors have been made, the assessment shall be stopped at that point and repeated from the beginning. Under no circumstances shall the requirements of this manual be waived or circumvented without the express approval of the commander or his designated representative.

WARNING

Battle-damaged areas should be inspected for unexploded ordinance before attempting repairs. Disposal of unexploded ordinance should be accomplished by qualified EOD personnel.

WARNING

Dynamic components which have experienced sudden stoppage, overtemperature, overtorque, or overspeed shall be evaluated prior to reuse.

WARNING

Substitute or repair hoses must meet system pressure and fluid requirements.

WARNING

Adhesives and materials must be compatible with the system fluid.

WARNING

In all cases, it is preferable to replace flight control rods rather than repair. Repairs should be made as a last resort for a one-time flight only.

WARNING

Hoisted components can cause injury or death if they fall. Keep away from hoisted components and loaded crane. If injury occurs, seek medical aid.

WARNING

ARMAMENT

Loaded weapons or weapons being loaded or unloaded, shall be pointed in a direction which offers the least exposure to personnel or property in the event of accidental firing. Personnel shall remain clear of hazardous area of all loaded weapons.

CLEANING SOLVENTS

Cleaning solvents may be flammable and toxic. Use only in well ventilated areas. Avoid inhalation of vapor and skin contact. Do not use solvents near open flame or in areas where very high temperatures prevail.

COMPRESSED AIR

Compressed air can blow dust and other particles into eyes. Wear eye protection. Do not exceed 30 psig air pressure.

ELECTROLYTE

Corrosive Battery Electrolyte (Potassium Hydroxide). Wear rubber gloves, apron, and faceshield when handling leaking batteries. If potassium hydroxide is spilled on clothing or other material, wash immediately with clean water. If spilled on personnel, immediately start flushing the affected area with clean water. Continue washing until medical assistance arrives.

EXPLOSIVES

Battle damaged areas should be inspected for unexploded ordnance before attempting repairs. Disposal of unexploded ordnance should be accomplished by qualified personnel.

EXTERNAL ELECTRICAL AND HYDRAULIC POWER

Application of external power or APU operation could cause injury to personnel. Make certain all switches and controls are in a safe condition. Inform all personnel working on helicopter that external power is being applied. If injury occurs, seek medical aid.

EXTERNAL STORES AND FIRE EXTINGUISHER CARTRIDGES

Static electricity can fire cartridges. To prevent injury to personnel, avoid contact with cartridge primer. Maintenance instructions must be followed to prevent accidental firing of cartridges. If injury occurs, seek medical aid.

FIRE EXTINGUISHER

Exposure to high concentrations of monobromotrifluoromethane (CF3BR) extinguishing agent or decomposition products should be avoided. The liquid should not be allowed to come into contact with the skin, as it may cause frostbite or low temperature burns.

WARNING

FUELING AND DEFUELING

- When refueling helicopter, the refueling vehicle or forward air refueling unit must be parked a minimum of 20 feet from the helicopter. Before starting the fueling operation, always insert fueling nozzle grounding chain of fuel truck ground wire into GROUND HERE receptacle located on the right side of the helicopter aft of the cabin area. Refer to TM 10-68.

- When defueling, turn off all electrical switches and disconnect external power from the helicopter. The helicopter must be electrically grounded prior to defueling.

- Jet engine fuel is toxic and explosive. Do not breathe vapors. Do not get fuel on clothes or skin. Use water to remove fuel from skin. If injury occurs, seek medical aid.

- Do not allow sparks or flame near helicopter when servicing or maintaining fuel system. Make certain helicopter is grounded. If injury occurs, seek medical aid.

GROUND OPERATION

The engines shall be started and run by assigned people only. When near tail rotor of helicopter, tell person at controls people are in tail rotor area. Approach tail rotor section of helicopter only from aft right side when engines are running. If injury occurs, seek medical aid.

HYDRAULIC FLUID

Prolonged contact with liquid or mist can irritate eyes and skin. After any prolonged contact with skin, immediately wash contacted area with soap and water. If liquid contacts eyes, flush immediately with clean water. If liquid is swallowed, do not induce vomiting, get immediate medical attention. Wear rubber gloves when handling liquid. If prolonged contact with mist is likely, wear appropriate respirator. When fluid is decomposed by heating, toxic gases are released.

NOISE

Sound pressure levels in this helicopter during some operating conditions exceed the Surgeon General hearing conservation criteria, as defined in TB MED 601. Hearing protection devices, such as aviator helmet or ear plugs are required to be worn by all personnel in and around the helicopter during its operation.

RADIOACTIVE MATERIALS

Self-luminous dials and ignition units may contain radioactive materials. If such an instrument or unit is broken or becomes unsealed , avoid personal contact. Use forceps or gloves made of rubber of polyethylene to pack up contaminated material. Place materials and gloves in a plastic bag. Seal bag and dispose of it as radioactive waste in accordance with AR 755-15 and TM 3-261-9, refer to TB 43-0108). Repair procedures shall conform to requirements in AM 700-52.

WARNING

ROTOR BLADES

Personnel will stay clear of rotor blades during operation.

SANDING DUST

Sanding on reinforced laminated glass produces fine dust that may cause skin irritations. Observe necessary protective measures.

TOXIC POISONS

Turbine fuels and lubricating oils contain additives which are poisonous and readily absorbed through the skin. Do not allow them to remain on skin longer than necessary.

TECHNICAL MANUAL

HEADQUARTERS
DEPARTMENT OF THE ARMY
WASHINGTON, D.C., 15 March 1996

NO. 1-1520-238-BD

TECHNICAL MANUAL

BATTLEFIELD DAMAGE ASSESSMENT AND REPAIR FOR

HELICOPTER, ATTACK,
AH-64A APACHE
(NSN 1520-01-106-9519)
(EIC: RHA)

REPORTING ERRORS AND RECOMMENDING IMPROVEMENTS

You can help improve this manual. If you find any mistakes, or if you know of a way to improve these procedures, please let us know. Mail your letter or DA Form 2028 (Recommended Changes to Publications and Blank Forms), or DA Form 2028-2 located in the back of this manual directly to: Commander, US Army Aviation and Troop Command, ATTN: AMSAT-I-MP, 4300 Goodfellow Blvd., St. Louis, MO 63120-1798. You may also submit your recommended changes by E-mail directly to <mpmt%avma28@st-louis-emh7.army.mil>. A reply will be furnished directly to you.

DISTRIBUTION STATEMENT A: Approved for public release; distribution is unlimited

TABLE OF CONTENTS

	Title	Page No.
	HOW TO USE THIS MANUAL	xv
	SAFETY SUMMARY	xvii
CHAPTER 1	GENERAL INFORMATION	1-1
Section I.	Introduction	1-1
Section II.	Standards and Practices	1-1
Section III.	Tasks and Responsibilities	1-9
Section IV.	Combat Threats	1-21
CHAPTER 2	AIRFRAME	2-1
Section I.	Introduction	2-1
Section II.	Airframe Battle Damage Inspection	2-10
Section III.	Airframe Battle Damage Evaluation	2-16
Section IV.	Airframe Battle Damage Repair Deferrability Assessment	2-53
Section V.	Airframe Battle Damage Limit and Deferment Tables	2-61
Section VI.	Airframe Battle Damage Repair	2-95
Section VII.	Airframe Structural Material Charts	2-130

TABLE OF CONTENTS - continued

	Title	Page No
CHAPTER 3	LANDING GEAR SYSTEM	3-1
CHAPTER 4	POWER PLANT INSTALLATION SYSTEM	4-1
CHAPTER 5	ROTOR SYSTEM	5-1
Section I.	Introduction	5-1
Section II.	Main Rotor Blades	5-11
CHAPTER 6	DRIVE SYSTEM	6-1
CHAPTER 7	HYDRAULIC AND PNEUMATIC SYSTEMS	7-1
Section I.	Introduction	7-1
Section II.	Hydraulic Tubing	7-15
CHAPTER 8	INSTRUMENTS	8-1
CHAPTER 9	ELECTRICAL SYSTEM	9-1
Section I.	Introduction	9-1
Section II.	Electrical Wiring	9-20
CHAPTER 10	FUEL SYSTEM	10-1
Section I.	Introduction	10-1
Section II.	Fuel Lines and Hoses	10-7
Section III.	Fuel Cell	10-11
Section IV.	External Fuel Tank	10-15
CHAPTER 11	FLIGHT CONTROL SYSTEM	11-1
Section I.	Introduction	11-1
Section II.	Control Rods	11-11
CHAPTER 12	UTILITY SYSTEMS	12-1
CHAPTER 13	ENVIRONMENTAL CONTROL SYSTEM	13-1
Section I.	Introduction	13-1
Section II.	Environmental Control Unit (ENCU)	13-5
Section III.	Ducting	13-7
Section IV.	Bleed Air Lines	13-8
CHAPTER 14	HOIST AND WINCHES	14-1
CHAPTER 15	AUXILIARY POWER UNIT	15-1
CHAPTER 16	MISSION EQUIPMENT	16-1
CHAPTER 17	EMERGENCY EQUIPMENT	17-1

TABLE OF CONTENTS - continued

	Title	Page No.
CHAPTER 18	AVIONICS	18-1
CHAPTER 19	AREA WEAPONS SYSTEM	19-1
APPENDIX A	REFERENCES	A-1
APPENDIX B	SPECIAL TOOLS LIST	B-1
Section I.	Introduction	B-1
Section II.	Special Tools List	B-2
APPENDIX C	EXPENDABLE SUPPLIES AND MATERIALS LIST	C-1
Section I.	Introduction	C-1
Section II.	Expendable Supplies and Materials List	C-2
APPENDIX D	CANNIBALIZATION	D-1
Section I.	Cannibalization Candidates Lists	D-1
Section II.	Group Removal/Installation Procedures	D-13
APPENDIX E	SUBSTITUTE MATERIALS AND PARTS	E-1
Section I.	Introduction	E-1
Section II.	Interchangeable parts	E-1
Section III.	O-Rings, Packings, and Gaskets	E-18
Section IV.	Petrolatum, Oil, and Lubricant (POL)	E-20
Section V.	Structural Metal Alloys	E-25
Section VI.	Structural Fasteners	E-27
APPENDIX F	MISSION CAPABILITIES	F-1
GLOSSARY		Glossary 1
Section I.	Acronyms and Abbreviations	Glossary 1
Section II.	Definitions of Unusual Terms	Glossary 9
ALPHABETICAL INDEX		Index 1

LIST OF ILLUSTRATIONS

	Title	Page No.
Figure 1-1.	10-Hour/14-Day Inspection Flow Diagram	1-5
Figure 1-2.	AH-64 Aircraft Zones	1-12
Figure 1-3.	Triage Assessment Chart	1-13
Figure 1-4.	Damage Assessment Markings	1-18
Figure 1-5.	Typical HEI Projectile	1-24
Figure 1-6.	Fragmentation Patterns Associated with a Typical HEI Projectile	1-24
Figure 2-1.	AH-64A Airframe from Above	2-4
Figure 2-2.	AH-64A Airframe from Below	2-5
Figure 2-3.	Rotor Support Component Location	2-6
Figure 2-4.	Longitudinal and Lateral Servocylinder Bracket Location	2-7
Figure 2-5.	AH-64AAirframe Dimensions	2-8
Figure 2-6.	AH-64A Airframe Station Location	2-9
Figure 2-7.	Use of Damage,Diagrams	2-14
Figure 2-8.	Labeling Damage	2-15
Figure 2-9.	Measuring Distance Between Damage Sites and Section Losses	2-18
Figure 2-10.	Measuring Area Losses	2-21
Figure 2-11.	Evaluating Damage to Built-Up Sheet Metal Beams	2-24
Figure 2-12.	Evaluating Damage to Built-Up Sheet Metal Frames	2-26
Figure 2-13.	Evaluating Damage to Built-Up Sheet Metal Bulkheads	2-28
Figure 2-14.	Evaluating Damage to Machined Frames and Beams	2-30
Figure 2-15.	Critical Regions of Machined Frames and Beams	2-31
Figure 2-16.	Evaluating Damage to Machined Fittings	2-33
Figure 2-17.	Evaluating Damage to Longerons	2-35
Figure 2-18.	Evaluating Damage to Splices, Straps, Doublers, and Gussets	2-37
Figure 2-19.	Evaluating Damage to Stringers	2-40
Figure 2-20.	Evaluating Damage to Skin Panels	2-42
Figure 2-21.	Evaluating Combined Skin/Stringer/Frame Damage	2-44
Figure 2-22.	Evaluating Damage to Honeycomb Sandwich Structures	2-47
Figure 2-23.	Evaluating Damage to Sheet Metal Floors and Decks	2-48
Figure 2-24.	Evaluating Damage to Sheet Metal Ribs, Formers, Intercostals, and Channels	2-50
Figure 2-25.	Skin/Stringer Proximity Relationships	2-55
Figure 2-26.	Minimum Separation Requirements	2-56
Figure 2-27.	Repair Deferrability Assessment Logic	2-57

LIST OF ILLUSTRATIONS - continued

	Title	Page No.
Figure 2-28.	Tailboom Sectional Zones	2-75
Figure 2-29.	Tailboom Frames 530.09 and 547.15 Sectional Zones and Critical Damage Areas	2-75
Figure 2-30.	Horizontal Stabilator Sectional Zones	2-76
Figure 2-31.	Vertical Stabilizer Sectional Zones	2-77
Figure 2-32.	Repair Concept 1: Damage to Tailboom Skin and Stringer	2-99
Figure 2-33.	Repair Concept 1: Overall Configuration	2-100
Figure 2-34.	Repair Concept 1: Planform View	2-101
Figure 2-35.	Repair Concept 1: Stringer Repair	2-102
Figure 2-36.	Repair Concept 2: Skin Cutout	2-104
Figure 2-37.	Repair Concept 2: Frame Repair	2-105
Figure 2-38.	Repair Concept 3: Frame Isometric Exploded View	2-107
Figure 2-39.	Repair Concept 3: Frame Repair	2-108
Figure 2-40.	Repair Concept 3: Skin and Stringer Repair	2-109
Figure 2-41.	Repair Concept 4: Damage to Vertical Spar	2-111
Figure 2-42.	Repair Concept 4: External Angle and Skin Patch	2-112
Figure 2-43.	Repair Concept 4: Isometric Exploded View	2-113
Figure 2-44.	Repair Concept 5: Damage Removal	2-115
Figure 2-45.	Repair Concept 5: Web and Cap Repair	2-116
Figure 2-46.	Repair Concept 5: Skin Repair	2-117
Figure 2-47.	Repair Concept 6: Damage to Forged Frame	2-119
Figure 2-48.	Repair Concept 6: Isometric View	2-120
Figure 2-49.	Repair Concept 7: Isometric View	2-122
Figure 2-50.	Repair Concept 8: Damage Cleanup and Web and Cap Repair	2-124
Figure 2-51.	Repair Concept 9: Isometric View	2-126
Figure 2-52.	EMI Protected Doors, Panels, and Fairings Location	2-128
Figure 2-53.	AH-64A Fuselage Frame Structure	2-131
Figure 2-54.	Fuselage Skin Plates	2-141
Figure 2-55.	Nacelle Structure	2-143
Figure 2-56.	Nacelle Skin Plates	2-145
Figure 2-57.	Wing Structure	2-147
Figure 2-58.	Wing Skin Plates	2-150
Figure 2-59.	Vertical Stabilizer Frame Structure	2-152
Figure 2-60.	Horizontal Stabilator Frame Structure	2-154

LIST OF ILLUSTRATIONS - continued

	Title	Page No.
Figure 2-61.	Vertical Stabilizer/Horizontal Stabilator Skin Plates	2-157
Figure 3-1.	Main Landing Gear Subsystem Component Location	3-5
Figure 3-2.	Tail Landing Gear Subsystem Component Location	3-6
Figure 3-3.	Brake Subsystem Component Location	3-7
Figure 4-1.	Power Plant Installation Component Location	4-4
Figure 5-1.	Main Rotor Subsystem Component Location	5-3
Figure 5-2.	Tail Rotor Subsystem Component Location	5-9
Figure 5-3.	Application of Skin Patch	5-14
Figure 5-4.	Curing Patch with Blade Repair Fixture	5-15
Figure 5-5.	AH-64A Apache Blade Repair Area	5-17
Figure 5-6.	Typical Double Plug Patch Repair	5-17
Figure 5-7.	Installation of Plug Patch	5-20
Figure 6-1.	Drive Shaft Subsystem Component Location	6-8
Figure 6-2.	Nose Gearbox Component Location	6-9
Figure 6-3.	Main Transmission Component Location	6-10
Figure 6-4.	Intermediate Gearbox Component Location	6-12
Figure 6-5.	Tail Rotor Gearbox Component Location	6-13
Figure 6-6.	Engine Nose Gearbox Housing and Cover High Stress Areas	6-14
Figure 6-7.	Main Transmission Housing High Stress Areas	6-15
Figure 6-8.	Intermediate Gearbox Housing High Stress Areas	6-17
Figure 6-9.	Tail Rotor Gearbox Housing and Cover High Stress Areas	6-19
Figure 7-1.	Utility Hydraulic Subsystem Component Location	7-7
Figure 7-2.	Primary Hydraulic Subsystem Component Location	7-8
Figure 7-3.	Pneumatic Subsystem Component Location	7-9
Figure 7-4.	Pressurized Air System Component Location	7-10
Figure 7-5.	Utility Hydraulic Subsystem Functional Diagram	7-11
Figure 7-6.	Primary Hydraulic Subsystem Functional Diagram	7-12
Figure 7-7.	Pressurized Air System Functional Diagram	7-13
Figure 7-8.	Tubing Repair (MS Fittings)	7-16
Figure 7-9.	Tubing Repair (AN Fittings)	7-16
Figure 7-10.	Damaged Tube Section	7-17
Figure 7-11.	MS Fittings on Undamaged Tube Ends	7-18
Figure 7-12.	Hose Assembly Replacement	7-18
Figure 8-1.	Engine Flight Instruments Component Location	8-3

LIST OF ILLUSTRATIONS - continued

	Title	Page No.
Figure 8-2.	Flight Instruments Component Location	8-5
Figure 8-3.	Navigation Instruments Component Location	8-7
Figure 8-4.	Miscellaneous Instruments Component Location	8-8
Figure 9-1.	Electrical Generation Subsystem Component Location	9-3
Figure 9-2.	External Electrical Distribution Subsystem Component Location	9-6
Figure 9-3.	Miscellaneous Electrical Subsystem Component Location	9-7
Figure 9-4.	Circuit Protection Subsystem Component Location	9-8
Figure 9-5.	Caution and Warning Subsystem Component Location	9-11
Figure 9-6.	Lighting Subsystem Component Location	9-13
Figure 9-7.	Shielded Cable Splice Repair	9-26
Figure 9-8.	Shielded Cable Repair Segments	9-27
Figure 10-1.	Fuel System Component Location	10-4
Figure 10-2.	Fuel System Functional Diagram	10-5
Figure 10-3.	Dual Clamp with String Bead Fuel Tubing Repair	10-9
Figure 10-4.	Repair of Small Hole in Tube with Hose Patch	10-9
Figure 10-5.	Expedient Repair of Damaged Hose	10-10
Figure 10-6.	Replacement of Damaged Hose Section	10-10
Figure 10-7.	Plug Modification for Three Plane Repair	10-14
Figure 10-8.	Quick-Fix Plug Repair	10-15
Figure 11-1.	Main Rotor (Lateral and Longitudinal) Flight Control Subsystem Component Location	11-6
Figure 11-2.	Main Rotor (Collective) Flight Control Subsystem Component Location	11-7
Figure 11-3.	Upper Flight Controls Component Location	11-8
Figure 11-4.	Tail Rotor (Directional) Flight Control Subsystem Component Location	11-9
Figure 11-5.	Control Rod Splice	11-13
Figure 11-6.	Control Rod with Bearing and Clevis Assemblies	11-14
Figure 11-7.	Damaged Control Rods	11-16
Figure 12-1.	Windshield Wiper Subsystem Component Location	12-2
Figure 12-2.	Rotor Blade De-Ice Subsystem Component Location	12-3
Figure 12-3.	Engine Anti-Ice Subsystem Component Location	12-5
Figure 12-4.	Canopy Anti-Ice Subsystem Component Location	12-7
Figure 12-5.	TADS/PNVS Anti-Ice Subsystem Component Location	12-7
Figure 12-6.	Pitot Anti-Ice Subsystem Component Location	12-8
Figure 12-7.	Fire Detection Subsystem Component Location	12-9

LIST OF ILLUSTRATIONS - continued

	Title	Page No.
Figure 12-8.	Fire Extinguishing Subsystem Component Location	12-13
Figure 12-9.	Canopy Jettison Subsystem Component Location	12-14
Figure 13-1.	ENCU Subsystem Component Location	13-3
Figure 13-2.	Defog Subsystem Component Location	13-4
Figure 13-3.	ENCU Repairs	13-6
Figure 13-4.	Bleed Air Line Patch Repair	13-9
Figure 15-1.	APU System Component Location	15-3
Figure 16-1.	External Stores System Component Location	16-3
Figure 18-1.	Communication Subsystem Component Location	18-4
Figure 18-2.	Navigation Subsystem Component Location	18-6
Figure 18-3.	IFF Subsystem Component Location	18-9
Figure 18-4.	Penetration Aids and Countermeasures Subsystem Component Location	18-10
Figure 18-5.	TADS/PNVS System Component Location	18-14
Figure 18-6.	Fire Control/Multiplex System Component Location	18-15
Figure 18-7.	IHADSS System Component Location	18-17
Figure 19-1.	Area Weapon System Component Location	19-3
Figure B-1.	Electrical Connector Maintenance Kit (5935-01-161-5883)	B-4
Figure B-2.	A/C Fuel Tank Repair Kit (4920-01-331-0908)	B-8
Figure B-3.	Emergency Wire Repair Kit (4920-01-266-7535)	B-9
Figure B-4.	Fluid Line Repair Kit (4920-01-266-7534)	B-10
Figure B-5.	Wire Repair Kit (5935-01-254-1688)	B-13
Figure B-6.	Electrical Test Kit (4920-01-266-7536)	B-16
Figure C-1.	Extruded Tee Flange	C-6
Figure D-1.	Empennage Assembly Block Diagram	D-9
Figure D-2.	Main Rotor Upper Control Block Diagram	D-10
Figure D-3.	Directional Control Block Diagram	D-11
Figure D-4.	Main Landing Gear Block Diagram	D-11
Figure D-5.	Tail Landing Gear Block Diagram	D-12
Figure D-6.	No. 5 Drive Shaft Removal/Installation	D-13
Figure D-7.	Directional Flight Control Rod Aft End Removal/Installation	D-14
Figure D-8.	Directional Flight Control Rod Forward End Removal/Installation	D-14
Figure D-9.	Stabilator Actuator Removal/Installation	D-14
Figure D-10.	Stabilator Rig Pin Removal/Installation	D-14
Figure D-11.	Electrical and Coaxial Connector Detachment/Attachment	D-15

LIST OF ILLUSTRATIONS - continued

	Title	Page No.
Figure D-12.	Connector P124 Detachment/Attachment	D-15
Figure D-13.	Primary Hydraulic Quick-Disconnect Removal/Installation	D-15
Figure D-14.	Utility Hydraulic Quick-Disconnect Removal/Installation	D-15
Figure D-15.	Empennage Assembly Removal/Installation	D-16
Figure D-16.	Connector P57 Detachment/Attachment	D-20
Figure D-17.	Connector P2 Detachment/Attachment	D-20
Figure D-18.	Connector P950 Detachment/Attachment	D-20
Figure D-19.	Right Chip Detector Wiring Clamp Removal/Installation	D-21
Figure D-20.	Transmission Oil Cooler Line Quick-Disconnect Removal/Installation	D-21
Figure D-21.	Oil Line and Wire Harness Removal/Installation	D-21
Figure D-22.	Shaft Driven Compressor Inlet Housing Removal/Installation	D-21
Figure D-23.	Jackscrew Removal/Installation	D-22
Figure D-24.	Sling Assembly Removal/Installation	D-23
Figure D-25.	Hoist and Sling Assembly Removal/Installation	D-23
Figure D-26.	Lower Transmission Strut Nuts Loosen/Torque	D-24
Figure D-27.	Mast Support Base Removal/Installation	D-24
Figure D-28.	Upper Rotor Assembly Removal/Installation	D-25
Figure D-29.	Primary Hydraulic Lines Removal/Installation and Connector P224 Detachment/Attachment	D-28
Figure D-30.	Utility Hydraulic Lines Removal/Installation	D-28
Figure D-31.	Grounding Strap Removal/Installation	D-29
Figure D-32.	Connectors P215 and P223 Detachment/Attachment	D-29
Figure D-33.	Control Rod Removal/Installation	D-29
Figure D-34.	No. 6 Driveshaft Removal/Installation	D-29
Figure D-35.	Temperature Sensor Removal/Installation	D-30
Figure D-36.	Sensor Harness Removal/Installation	D-30
Figure D-37.	De-Ice Wire Harness Clamps Removal/Installation	D-30
Figure D-38.	Tail Rotor Brush Block Removal/Installation	D-31
Figure D-39.	Grounding Strap and Wire Clamp Removal/Installation	D-31
Figure D-40.	Connector P58 Detachment/Attachment	D-31
Figure D-41.	Tail Rotor Gearbox Strut Removal/Installation	D-32
Figure D-42.	Tail Rotor Gearbox Assembly Removal/Installation	D-32
Figure D-43.	Tailboom Jacking Point	D-36
Figure D-44.	Grounding Straps Removal/Installation	D-36

LIST OF ILLUSTRATIONS - continued

Title		Page No.
Figure D-45.	Tail Wheel Lock Actuator Hose Removal/Installation	D-37
Figure D-46.	Connector P760 Detachment/Attachment	D-37
Figure D-47.	Shock Strut Removal/Installation	D-37
Figure D-48.	Trailing Arms Removal/Installation	D-37

LIST OF TABLES

	Title	Page No.
Table 1-1.	AH-64A ACM/BDR - Preflight Inspection	1-2
Table 1-2.	AH-64AACM/BDR - 10-Hour/14-Day Inspection	1-3
Table 1-3.	Zone #1 - Forward Fuselage Critical Components	1-14
Table 1-4.	Zone #2 - Center Fuselage Critical Components	1-14
Table 1-5.	Zone #3 - Aft Fuselage/Tailboom Critical Components	1-14
Table 1-6.	Zone #4 - Wings Critical Components	1-14
Table 1-7.	Zone #5 - Crew Station Critical Components	1-14
Table 1-8.	Zone #6 - Engine Nacelles Critical Components	1-15
Table 1-9.	Zone #7 - Empennage Critical Components	1-15
Table 1-10.	Zone #8 - Main Rotor/Upper Controls Critical Components	1-15
Table 1-11.	Ballistic Damage Modes	1-22
Table 2-1.	Airframe Cannibalization Candidates	2-2
Table 2-2.	Tailboom Frame (Category I) Type I Damage Limits	2-61
Table 2-3.	Tailboom Stringer (Category II) Type I Damage Limits	2-63
Table 2-4.	Tailboom Skin (Category II) Type I Damage Limits	2-67
Table 2-5.	Horizontal Stabilator Spar (Category I) Type I Damage Limits	2-69
Table 2-6.	Horizontal Stabilator Rib (Category I) Type I Damage Limits	2-70
Table 2-7.	Horizontal Stabilator Machined Fittings (Category I) Type I Damage Limits	2-70
Table 2-8.	Horizontal Stabilator Skin (Category II) Type I Damage Limits	2-70
Table 2-9.	Vertical Stabilizer Spar (Category I) Type I Damage Limits	2-71
Table 2-10.	Vertical Stabilizer Rib (Category I) Type I Damage Limits	2-73
Table 2-11.	Vertical Stabilizer Machined Fittings (Category I) Type I Damage Limits	2-73
Table 2-12.	Vertical Stabilizer Skin (Category II) Type I Damage Limits	2-74
Table 2-13.	Tailboom Frame (Category I) Type II Damage Limits	2-78
Table 2-14.	Tailboom Stringer (Category II) Type II Damage Limits	2-80
Table 2-15.	Tailboom Skin (Category II) Type II Damage Limits	2-83
Table 2-16.	Horizontal Stabilator Spar (Category I) Type II Damage Limits	2-85
Table 2-17.	Horizontal Stabilator Rib (Category I) Type II Damage Limits	2-86
Table 2-18.	Horizontal Stabilator Machined Fittings (Category I) Type II Damage Limits	2-86
Table 2-19.	Horizontal Stabilator Skin (Category II) Type II Damage Limits	2-86
Table 2-20.	Vertical Stabilizer Spar (Category I) Type II Damage Limits	2-87
Table 2-21.	Vertical Stabilizer Rib (Category I) Type II Damage Limits	2-89
Table 2-22.	Vertical Stabilizer Machined Fittings (Category I) Type II Damage Limits	2-89
Table 2-23.	Vertical Stabilizer Skin (Category II) Type II Damage Limits	2-90

LIST OF TABLES - continued

	Title	Page No.
Table 2-24.	Tailboom Frame (Category I) Type I Deferment	2-91
Table 2-25.	Tailboom Stringer and Skin (Category II) Type I Deferment	2-91
Table 2-26.	Horizontal Stabilator Spars, Ribs, and Machined Fittings (Category I) Type I Deferment	2-91
Table 2-27.	Horizontal Stabilator Skin (Category II) Type I Deferment	2-92
Table 2-28.	Vertical Stabilizer Spars, Ribs, and Machined Fittings (Category I) Type I Deferment	2-92
Table 2-29.	Vertical Stabilizer Skin (Category II) Type I Deferment	2-92
Table 2-30.	Tailboom Frame (Category I) Type II Deferment	2-93
Table 2-31.	Tailboom Stringer and Skin (Category II) Type II Deferment	2-93
Table 2-32.	Horizontal Stabilator Spars, Ribs, and Machined Fittings (Category I) Type II Deferment	2-93
Table 2-33.	Horizontal Stabilator Skin (Category II) Type II Deferment	2-94
Table 2-34.	Vertical Stabilizer Spars, Ribs, and Machined Fittings (Category I) Type II Deferment	2-94
Table 2-35.	Vertical Stabilizer Skin (Category II) Type II Deferment	2-94
Table 2-36.	Repair Materials Chart	2-95
Table 2-37.	AH-64A Fuselage Frame Structure Material Chart	2-136
Table 2-38.	Fuselage Skin Plates Material Chart	2-142
Table 2-39.	Nacelle Structure MaterialChart	2-144
Table 2-40.	Nacelle Skin Plates Material Chart	2-146
Table 2-41.	Wing Structure Material Chart	2-148
Table 2-42.	Wing Skin Plates Material Chart	2-151
Table 2-43.	Vertical Stabilizer Frame Material Chart	2-153
Table 2-44.	Horizontal Stabilator Frame Material Chart	2-155
Table 2-45.	Vertical Stabilizer/Horizontal Stabilator Skin Plates Material Chart	2-158
Table 3-1.	Landing Gear System Components Expanded Combat Damage Criteria	3-2
Table 3-2.	Landing Gear System Cannibalization Candidates	3-3
Table 4-1.	Power Plants Installation System Components Expanded Combat Damage Criteria	4-2
Table 4-2.	Power Plants Installation System Quick Release Pins Suitable Substitutes	4-2
Table 4-3.	Power Plant Installation System Cannibalization Candidates	4-3
Table 5-1.	Rotor System Cannibalization Candidates	5-2
Table 5-2.	Skin Patch Repair Kits	5-11
Table 5-3.	Plug Patch Repair Kits	5-16
Table 6-1.	Drive System Components Expanded Combat Damage Criteria	6-2

LIST OF TABLES - continued

	Title	Page No.
Table 6-2.	Drive System Components Oil System Combat Inspection Criteria	6-3
Table 6-3.	Main Transmission Housing Damage Criteria	6-5
Table 6-4.	Engine Nose Gearbox Housing Damage Criteria	6-5
Table 6-5.	Intermediate Gearbox Housing Damage Criteria	6-5
Table 6-6.	Tail Rotor Gearbox Housing Damage Criteria	6-5
Table 6-7.	Drive System Cannibalization Candidates	6-6
Table 7-1.	Hydraulic and Pneumatic System Components Expanded Combat Damage Criteria	7-2
Table 7-2.	SDC Oil System Combat Inspection Criteria	7-4
Table 7-3.	Hydraulic Tubes Expanded Combat Damage Criteria	7-4
Table 7-4.	Pneumatic Tubes Expanded Combat Damage Criteria	7-5
Table 7-5.	Hydraulic and Pneumatic System Cannibalization Candidates	7-6
Table 8-1.	Instruments System Cannibalization Candidates	8-1
Table 9-1.	Electrical System Cannibalization Candidates	9-2
Table 10-1.	Fuel System Components Expanded Combat Damage Criteria	10-2
Table 10-2.	Fuel Cell Expanded Combat Damage Criteria	10-3
Table 10-3.	Fuel System Cannibalization Candidates	10-3
Table 11-1.	Flight Control System Components Expanded Combat Damage Criteria	11-2
Table 11-2.	Flight Control System Cannibalization Candidates	11-5
Table 13-1.	ECS System Cannibalization Candidates	13-2
Table 15-1.	APU System Components Expanded Combat Damage Criteria	15-1
Table 15-2.	APU Oil System Combat Inspection Criteria	15-2
Table 15-3.	APU System Cannibalization Candidates	15-2
Table 16-1.	Mission Equipment System Cannibalization Candidates	16-1
Table 18-1.	Avionics System Cannibalization Candidates	18-2
Table 19-1.	Area Weapon System Cannibalization Candidates	19-1
Table C-1.	Extruded Tee Flange	C-6
Table D-1.	AH-64A Major Component Cannibalization Candidates	D-1
Table D-2.	AH-64A Electrical/Avionic Major Component Cannibalization Candidates	D-6
Table E-1.	Structural Interchangeability-Replaceability List	E-1
Table E-2.	Packing Reference and Temperature Guide	E-18
Table E-3.	Substitute U.S. Fuels	E-20
Table E-4.	Substitute Foreign Fuels	E-21
Table E-5.	Substitute Commercial Fuels	E-22

LIST OF TABLES - continued

	Title	Page No.
Table E-6.	Alternate and Expedient Fuel Blends	E-23
Table E-7.	Substitute Lubricants and Hydraulic Fluids	E-24
Table E-8.	Metal Substitution Chart	E-25
Table E-9.	Substitute Structural Fastener Chart	E-27
Table F-1.	Mission Capabilities Chart	F-1
Table F-2.	Autonomous Weapons Engagement (Night Mission)	F-8
Table F-3.	Autonomous Weapons Engagement (Day Mission)	F-9
Table F-4.	Remote Weapons Engagement (Night Mission)	F-10
Table F-5.	Remote Weapons Engagement (Day Mission)	F-11

HOW TO USE THIS MANUAL

This manual has been developed to assist the soldier in a battlefield environment to make assessment and repair of battle damage on the Army AH-64A Apache attack helicopter which cannot, due to asset availability or environmental factors, be repaired in the normal prescribed manner.

Within this technical manual, the word shall is used to indicate a mandatory requirement. The word should is used to indicate a non-mandatory but preferred method of accomplishment. The word may is used to indicate an acceptable method of accomplishment. The word will is used for declaration of purpose.

Warnings, cautions, and notes are used to emphasize important and critical instructions and are used for the following conditions:

WARNING

An operating procedure or practice, which if not correctly followed, could result in personal injury or loss of life.

CAUTION

An operating procedure or practice, which if not strictly observed, could result in damage to or destruction of equipment.

NOTE

An operating procedure or condition, which is essential to highlight.

This manual contains a general information chapter (Chapter 1), eighteen specific repair chapters for each major functional group (Chapters 2 thru 19), six appendices, a glossary, and an index.

The major functional group chapters in this manual correspond with the functional groups of the TM 1-1520-238-23 series manuals that are employed in routine peacetime repairs to the AH-64A helicopter. Each functional group chapter is organized as follows:

a. Section I - Introduction.

(1) Scope. Purpose and application of the chapter.
(2) System Description and Location. Description of system and subsystem components and their location in the aircraft.
(3) Assessment Procedure. Assessment of damage to the system and determine if deferment, repair, or non-repair will be applied.
(4) Serviceability Criteria. General and specific serviceability criteria used in evaluation of system components.
(5) Cannibalization Criteria. List of critical components of the system that should be salvaged from crippled aircraft.
(6) Repair Procedure Index. List of all applicable repair tasks within the chapter.

b. Section II - Repair Item.

(1) General. Nature and cause of the damage and repair.
(2) Repair Item and Trouble.

(a) Limitations of repair.
(b) Personnel/time required for repair.
(c) Materials/tools required for repair.
(d) Procedural steps to perform repair.

(3) Options. If more than one method of repair can be utilized, the various options will be listed. The first option is the preferred repair method, the second option is the next preferred, etc. Selection of the option should be the most preferred method possible under the circumstances and with the materials and manpower available.

HOW TO USE THIS MANUAL - continued

c. Finding Repair Procedures in this Manual.

When the damage is obvious and known, find the functional group chapter of which the damaged item is a part. Turn to the repair procedure index and locate the item being repaired. Then turn to the appropriate repair section and review each option to ascertain the appropriate fix. Read the entire section for the option, then perform the repairs following the procedures given. If the chapter does not have a repair procedure for that specific system/component, refer to the manual(s) listed for repair of the system/component.

d. Preparation.

Each mechanic/technician shall read Chapter 1 and shall be familiar with the repairs and layout of the manual prior to attempting any BDR repairs. All warnings, cautions, and standard safety precautions shall be followed, inasmuch as possible, at all times during BDR procedures so as not to further damage or jeopardize either personnel or equipment during or subsequent to the BDR action. Ensure all documentation is completed as directed in this manual and by local command.

e. Expendable Supplies and Materials.

Each fix or repair option contains a list of materials and tools considered basic to the repair. It is important to note that the expendable materials listed usually cover a wide range for any one item. One of the key points concerning successful BDR repairs is flexibility. The users of this manual should strive to use the items on hand, provided a safe repair is made. The stringent requirements of peacetime maintenance are usually lifted in a combat environment.

SAFETY SUMMARY

This publication describes physical and chemical processes which may require the use of chemicals, solvents, paints, or other commercially available material. The user of this publication should obtain the material safety data sheets (Occupational Safety and Health Act (OSHA) Form 20 or equivalent) from the manufacturers or suppliers of materials to be used. The user must become completely familiar with the manufacturer/supplier information and adhere to the procedures, recommendations, warnings, and cautions of the manufacturer/supplier for the safe use, handling, storage, and disposal of these materials. The following are general safety precautions and instructions that people must understand and apply during many phases of operation and maintenance to ensure personal safety and health and the protection of DOD property. Portions of this safety summary may be repeated elsewhere in this publication for emphasis.

WARNING AND CAUTION STATEMENTS

WARNING and CAUTION statements have been strategically placed throughout this text prior to operating or maintenance procedures, practices, or conditions considered essential to the protection of personnel (WARNING) or equipment and property (CAUTION). A WARNING or CAUTION will apply each time the related step is repeated. Prior to starting any task, the WARNINGS or CAUTIONS included in the text for that task will be reviewed and understood. Refer to the materials list figure at the beginning of the appropriate manual section for material used during maintenance of this equipment. The detailed warnings for hazardous material only are listed separately in the safety summary as the "Hazardous Materials Warnings" section.

HAZARDOUS MATERIALS WARNINGS

Warnings for hazardous material in this manual are designed to warn personnel of hazards associated with such items when they come in contact with them during actual use. For each hazardous material used, a material safety data sheet (MSDS) is required to be provided and available for review by the users. Consult your local safety and health staff concerning any questions on hazardous chemicals, MSDSs, personal protective equipment requirements, and appropriate handling and emergency procedures. This Hazardous Materials Warnings section gives the complete warnings for hazardous material used in this manual. To help the user understand the potential hazards of these materials, a more detailed warning for these materials and an explanation of the hazard symbols follow.

EXPLANATION OF HAZARD SYMBOLS

The rapidly expanding symbol shows that the material may explode if subjected to high temperatures, sources of ignition, or high pressure.

The symbol of a flame shows that a material can ignite and burn you.

The symbol of a human figure in a cloud shows that vapors of a material present a danger to your life or health.

The symbol of drops of a liquid onto a hand shows that the material will cause burns or irritation of human skin or tissue.

The symbol of a person wearing goggles shows that the material will injure your eyes.

CHAPTER 1
GENERAL INFORMATION

BDAR TM PROCEDURES. THE EXPEDIENT REPAIR PROCEDURES IN BDAR TM ARE FOR USE IN COMBAT ONLY. STANDARD MAINTENANCE/REPAIR PROCEDURES ARE TO BE USED AS SOON THEREAFTER AS POSSIBLE.

Section I. INTRODUCTION

1-1. PURPOSE.

This manual provides information and instructions for assessing and repairing battle damage to the Army AH-64A Apache Helicopter. The purpose of the manual is to assist the damage assessor in identifying and classifying aircraft battle damage, assessing the extent of the damage, and determining if repair can be made or deferred. Methods of expedient battle damage repair (BDR) are also presented.

1-2. SCOPE.

This manual is to be used by aviation unit maintenance (AVUM) and aviation intermediate maintenance (AVIM) personnel during combat operations and for training of personnel.

1-3. APPLICATION.

These procedures are to be used during combat operations only. The commander determines when normal maintenance procedures may be deferred. Repairs are made using interim techniques, off-the-shelf standard hardware (not necessarily aircraft related), and without concern for appearance. As new repair procedures, materials, tools, and equipment become available they will be introduced and incorporated into this manual.

1-4. TERMS AND DEFINITIONS.

There is a variety of special terms and definitions used with battle damage assessment and repair. The reader should familiarize himself with the terms in the glossary before continuing.

Section II. STANDARDS AND PRACTICES

1-5. BDR CHARACTERISTICS.

During the first few days of combat, maximum aircraft availability is essential. Aircraft will sustain varying degrees of damage during combat operations. The damage must be assessed and repaired as quickly as possible. Maximum availability must be maintained for further sorties. In addition to combat damage, aircraft will have higher component failure rates because of increased flying hours and higher stress levels. Aircraft combat maintenance/battle damage repair (ACM/BDR) is an operational concept for maintaining aircraft at a high level of readiness in combat. Peacetime maintenance procedures and methods must be modified to achieve this.

Aircraft which have battle damage will be inspected and classified by a damage assessor using a method similar to the medical concept of "triage" (deferment, repair, non-repair). Following assessment, some aircraft will be returned to service immediately through deferment. Other aircraft will be repaired using approved BDR techniques. Those aircraft requiring extensive repair (4 to 24 hours) will be set aside and repaired as manpower and parts become available. Aircraft that have sustained major battle damage so that BDR is not practical may be ground-recovered or evacuated to a facility with required repair sources, cannibalized for spare components, or destroyed in place to prevent enemy capture.

Scheduled maintenance and inspections will be completed in accordance with paragraph 1-6. Necessary lubrication, servicing, and operational checks (TM 1-1520-238-23) will not be deferred. When conditions permit, the "overflown" inspection will be completed. When expedient repairs are made on the aircraft or repair of damage is deferred, to ensure flight safety or mission accomplishment, it may be necessary to schedule inspections at subsequent flight hour intervals. Scheduled battle damage inspections of this type will not be deferred.

During periods of intense combat, aircraft will receive only that maintenance needed for the next scheduled mission. They will often be flown with nonessential components damaged, inoperative, or missing. Repair of systems and subsystems which are not critical to mission accomplishment, may be deferred unless they might cause further damage. Items may be deferred even if it places operational limitations on the aircraft, as long as the restricted aircraft can accomplish designated missions and can contribute to the battle. Deferment of repairs for a one-time flight to a higher maintenance level, or for self-recovery from a combat area, is highly desirable. This eliminates the need for another aircraft to accomplish the recovery, or the loss of the aircraft if recovery is not available. The maintenance officer or assessor will make the decision based on an analysis of the overall situation and air worthiness of the aircraft.

1-6. INSPECTIONS.

1-6.1. ACM/BDR Preflight and 10-Hour/14 Day Inspection. The ACM/BDR modified preflight (TM 1-1520-238-10) and 10-hour/14-day (TM 1-1520-238-PMS) inspections are the only preventive maintenance required. All phases can be deferred for the 100 flight hours or 30 days.

As stated in the AH-64A Operator's Manual (TM 1-1520-238-10), “The preflight inspection may be as comprehensive as conditions warrant, at the discretion of the pilot”. Considering that the aircraft has been engaged in combat operations and has been recently post-flighted and considered fit for continued operation, the preflight inspection is not intended to be a detailed mechanical inspection, but rather a quick look for obvious discrepancies. Ensure all major components (landing gear, wings, empennage, etc.) are intact and have no severe damage. Ensure that all tools, equipment, and potential FOD materials have been removed and all panels, doors, and fairings (if available) are secured in place. Check all accessible tubes, hoses, and fittings for excessive leakage.

The 10-hour/14-day inspection should be more detailed and will involve the removal of panels and doors to provide access to internal components. Check for excessive wear, damage, and loose or missing hardware and wiring. Ensure that all systems have been properly serviced and all tubing, hoses, and fittings are intact and free from excessive leakage. Refer to Figure 1-1.

Maintenance personnel should refer to Tables 1-1 and 1-2 which identify the recommended list of ACM/BDR inspections for both preflight and 10-hour/14-day requirements.

Table 1-1. AH-64A ACM/BDR - Preflight Inspection

Task Description
Gun Turret - Mounting, Feed Chute
Right Forward Avionics Bay
Right MLG and Wheel Assembly
Main Transmission
Right Engine Nose Gearbox
Right Engine Inlet
Upper Flight Control Components
Stationary Swashplate
Rotating Swashplate
Main Rotor Head/Blades/Strap Packs
Rotor Hub
Blade Spars, Root Finger Doublers, and Bushings
Right Wing Surfaces, Panels, and Lights
Pylons and Racks, Safety Pins, and Streamers
Pilot Tube
Ammunition Bay Door

Table 1-1. AH-64A ACM/BDR - Preflight Inspection-Cont

Task Description
APU Exhaust
Right Engine IR Suppressor Nozzles
Utility Hydraulic Return Accumulator Check
Right Fuselage and Nacelle Doors/Panels
Antennas
Tailboom Exterior, Access Panels, and Doors
Empennage - Access Panels and Fairings
Tail Landing Gear and Wheel Assembly
Tail Rotor Assembly/Swashplate/Blades
Left Wing Surfaces, Panels, and Lights
Left Fuselage and Nacelle Doors/Panels
Left Engine IR Suppressor Nozzles
Pylons and Racks, Safety Pins, and Streamers
Pitot Tube
Left Engine Nose Gearbox
Left Engine Inlet
Utility Hydraulic Accumulator Check
Left MLG and Wheel Assembly
Left Forward Avionics Bay
Canopy Glass and Doors
TADS/PNVS
Pilot Seat/Belt/Attachments
CPG Seat/Belt/Attachments

Table 1-2. AH-64A ACM/BDR - 10-Hour/14-Day Inspection

Area Number	Task Description
No. 1	Right FAB Components
	Right MLG
No. 2	Refuel Panel
	Ammo Bay Door
	Transmission Deck (Forward RH)
	Flight Control Actuators
	No. 2 Engine NGB/Driveshaft
	No. 2 Engine Inlet
	No. 2 Engine Components (Platform Door Open)
	No. 2 Engine Mounts/Pins/Bushings
	RH Wing - Pylons/Stores
No. 3	RH Lower Nacelle
	No. 2 Engine IR Suppressor Nozzles
	RH Avionics Bay Components
	Battery Charger
No. 4	APU Exhaust Duct
	Hydraulic Ground Service Panels
	RH Stowage Compartment
	Tail Rotor Shaft/Couplings/Dampers/Anti-Flails
No. 5	Horizontal Stabilator/Actuator
	Frames 530 and 547/Stringers
	TLG/Actuator/Lock/Wheel/Tire
	Vertical Stabilizer/Antennas/Lights
	Tail Rotor/Shaft/Rods/Actuator
	Rotor/Hub/Blade/Swashplate/Fork
No. 6	Chaff Dispenser
	LH Stowage Compartment
	ENCU Exhaust Duct
	Lights
	Antenna

Table 1-2. AH-64A ACM/BDR - 10-Hour/14-Day Inspection

Area Number	Task Description
No. 7	Internal Maintenance Platform
	Fuel/Hydraulic/Lube Oil Lines
	Transmission Deck (AFT)/Rotor Brake/SDC
	Tail Rotor Drive (FWD)/Couplings/Dampers/Anti-Flail
	Fire Extinguisher System
	ENCU
	APU
No. 8	IR Jammer
	ADS
	Deice System
	Main Rotor/Head/Blade/Straps
	Upper Flight Controls
	Mast
No. 9	RH Lower Nacelle
	No. 1 Engine IR Suppressor Nozzles
	LH Aft Avionics Bay Components
No. 10	LH Wing - Pylons/Stores
	Transmission Deck (Forward LH)
	No. 2 Engine NGB/Driveshaft
	No. 2 Engine Inlet
	No. 2 Engine Components (Platform Door Open)
	No. 2 Engine Mounts/Pins/Bushings
No. 11	Left MLG
	Left FAB Components
No. 12	TADS/PNVS
	Gun/Turret/Components
No. 13	Doghouse Fairing/Fairings
	Windshield/Transparencies
	Pilot Compartment/Blast Barrier
	Seat
No. 14	Windshield Wipers/Windshield/Transparencies
	Seat
	Control Panel/Console

1-6.2. Safety of Flight Inspection. The following components/subsystem items should be inspected during every scheduled preflight to preclude safety of flight incidents related to these designated components. Refer to ACM/BDR preflight inspection, Table 1-1.

a. Forward hanger bearing assembly.

b. Wire bundle chafing - forward avionics bays.

c. Fuel hose assemblies.

d. Fuel oil hydraulic lines and electrical cables chafing.

e. Shear nut in TLG.

f. Shaft Driven Compressor.

g. Main rotor housing nuts.

h. Tail rotor swashplate/slider.

i. Brake assembly hose clamp.

j. Main rotor droop stop ring liner and lower seal retainer ring.

k. Tail rotor servocylinder assembly.

1. Main rotor strap packs.

m. Main rotor blade pins.

n. Aft engine mount pins and bushings.

o. Main rotor swashplate.

p. Generator cable chafing.

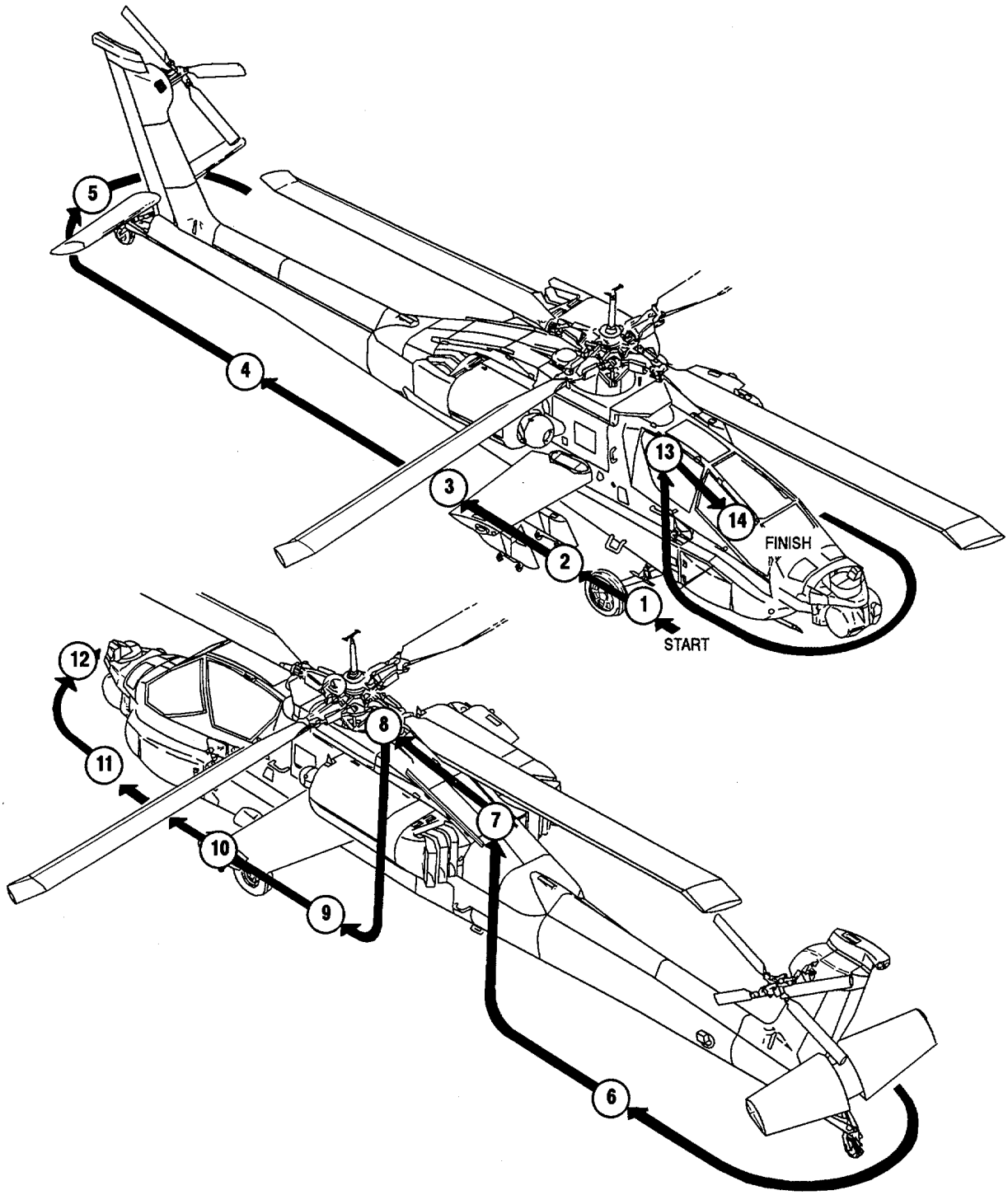

M102-200

Figure 1-1. 10-Hour/14-Day Inspection Flow Diagram

1-6.3. Special Inspection. The following special inspection must be accomplished at each 10-hour/14-day interval. These essential inspection areas are the driving factors for performing the 10-hour interval inspection. Refer to ACM/BDR 10-hour/14-day inspection, Table 1-2.

a. Engine 10-hour inspection requirement (THIR) inspection.
b. Tail rotor debonding check.
c. Strap packs.
d. Main transmission.
e. Refuel valve.
f. Tail rotor swashplate bearing/slider.

1-6.4. Hard Landing Inspection. The AH-64A landing gear consists of two main gear assemblies and port and ground stability to the aircraft during taxiing, takeoff landing and towing. The landing gear shock struts also have crash attenuation features which reduce or eliminate damage to the fuselage during hard landings and provide protection to the occupants during crashes by absorbing up to 57 percent of the impact kinetic energy. The design criteria allows damage to the airframe and the landing gear for sink speeds in excess of the limit landing condition of 10 ft/sec. This damage can be in the form of yielding and deformation of the landing gear system and airframe structure. The extent of the damage depends on the sink speed, attitude, and gross weight of the aircraft at impact. Perform this inspection after a suspected hard landing.

The damage evaluation is divided into three sections, main landing gear, tail landing gear, and airframe structures. To visually determine whether an aircraft has experienced a hard landing, perform the following inspections:

1-6.4.1. Main Landing Gear Inspection.

a. Check shock strut for:
    (1) Collapsed condition (may indicate sheared fuse collar and ruptured disk or red band is not visible on lower piston).
    (2) Cracks or distortions.
    (3) Hydraulic fluid leakage.
b. Check trailing arm for:
    (1) Cracks or distortions.
c. Check wheels and tires for:
    (1) Bent or cracked wheels.
    (2) Leakage or tears to tires.

1-6.4.2. Tail Landing Gear Inspection.

a. Check shock strut for:
    (1) Collapsed condition (may indicate ruptured disks).
    (2) Cracks or distortions.
    (3) Hydraulic fluid leakage.
    (4) Elastomeric charge discharged at lower end of strut.
b. Check trailing arm and fork for:
    (1) Cracks or distortions.
c. Check wheel and tire for:
    (1) Bent or cracked wheel.
    (2) Leakage or tears to tire.

1-6.4.3. Airframe Structures Inspection.

a. Check airframe in main landing gear area for:
    (1) Cracks and distortion in the main landing gear attach cross tube and the shock strut upper attachment support fitting.
    (2) Buckling and distortion of fuselage frames at F.S. 91.7, 105, 115, 125, 136, 144, and 154.3.
    (3) Sheared rivets or buckling of outer skin and pilot floor from F.S. 91.7 to F.S. 154.3.
b. Check tailboom for:
    (1) Sheared rivets or buckling of outer skin from F.S. 370 to F.S. 547.
    (2) Buckling or cracks in stringers from F.S. 370 to F.S. 547.

(3) Buckling of fuselage frames from F.S. 370 to F.S. 531.

c. Check airframe in tail landing gear area for:

(1) Buckling or distortion of the tailboom close out frame at F.S. 547.

(2) Cracks and distortion in the bulkhead strut attach and trailing arm pivot lugs.

d. Check for distortion and cracks in the following areas:

(1) Wing mounts.

(2) Pylon stores.

(3) Area weapon mounts.

(4) Engine mounts.

(5) Main rotor droop stops.

(6) TADS/PNVS mounts.

If the aircraft has experienced a hard landing and damage has been found, refer to Chapter 2 for detailed airframe damage evaluation or to Chapter 3 for landing gear detail damage evaluation.

1-6.5. Overhaul and Retirement. Overhaul and retirement should be deferred for the 100 flight hours or 30 days combat surge, as long as the preflight and10-hour/14-day inspections are being performed.

1-7. DEFERRED MAINTENANCE.

Deferred maintenance is when the decision is made to relax the requirement to repair a damaged system/subsystem of an aircraft. Repair of damage assessed a shaving no major impact on functional or flight safety of the AH-64A Apache shall be deferred. Most normal peacetime maintenance criteria shall be deferred except as stated in each applicable system chapter for periods of combat emergency. When damage is deferred, a scheduled inspection interval should be initiated to monitor the component damage for growth and continued aircraft operation. Only the Commanding Officer may authorize the use of combat maintenance criteria and procedures.

1-8. SERVICEABILITY CRITERIA.

Serviceability criteria is that criteria which determines whether a structure or a component is within design specification to perform its intended function. Each system chapter has expanded combat damage criteria for use in wartime that supersedes peacetime maintenance criteria. Using the expanded combat serviceability criteria allows deferral of non-critical maintenance which results in: lower maintenance requirements, reduced spare parts usage, reduced aircraft maintenance down time, and increased aircraft availability. If expanded combat damage criteria is not available for a specific component, the TM 1-1520-238-23 peacetime inspection criteria shall be utilized.

Serviceability is the final leg of a three-part process. First is to identify damage to the structure or component, second is to inspect for the extent of damage to the structure or component, and third is to measure the extent of the damage to the serviceability criteria for that structure or component. All structures, components, hardware, etc. that are within the serviceability criteria in their respective chapters are usable. However, they will still have to be periodically inspected for damage propagation.

1-9. DAMAGE ASSESSMENT/EVALUATION.

Damage assessment is the inspection and decision process that determines the extent of the damage. A visual inspection is essential and any type of inspection tool necessary to accomplish this task is acceptable. The informational data required to determine effective assessment of damage will occur within two categories. First the assessor will need to know the full extent of inflicted damage, both internal and external. The expanded combat damage criteria will be presented two ways: maximum damage allowed and minimum material required for safe operation. The assessor will have to assess the damage in order to determine the potential consequences of the damaged system for impact on the aircraft mission. Deferment action for corrective maintenance will also have to be assessed for the over-all impact on the maintenance activity.

1-10. SERVICEABILITY ASSESSMENT.

The assessment standards provided concentrate on the airworthiness and mission capability of the AH-64A airframe. However, every member of the airframe has a structural and/or functional purpose. Even those members which are unessential to airworthiness may have an important function related to the integrity and performance of other aircraft systems and components.

Many of these characteristics have been considered and are reflected in the assessment standards.

The assessor is responsible for working with other specialists to determine if damage to airframe structures or components will overstress, cause further damage, or degrade the performance of other system components. All of the system hardware near the damage should be inspected for these possible effects. Among the types of conditions to consider are:

a. Structural and component movement which might change the location or alignment of a component. Controls and drives will be particularly critical.
b. Structural and component damage which could affect the security of wire bundles and fluid lines, causing them to vibrate, chafe, and fatigue during flight.
c. Damaged structure or components which might interfere with the free travel or movement of a system component during operation.

If the assessor determines that structure or component damage will or might create any of the above conditions, classify the structure or component as failed even if the physical damage is within allowable limits. If a damaged section contains previously deferred damage, the old and new damage must be evaluated together. Assessment of minor battle damage shall be inspected periodically for damage propagation.

1-11. SERVICING.

Components such as engines, transmissions, intermediate, and tail rotor gearboxes have expanded criteria and servicing can be deferred to match the specific limitations. Other components will be serviced to peacetime standards and should be checked at the end of each flying day unless damage is evident to the component.

1-12. CANNIBALIZATION.

All components or structures that have been assessed as serviceable are candidates for cannibalization. As a result of the demands placed on the maintenance and supply during combat, the number of aircraft available for use will decrease rapidly. Cannibalization will be used to augment the supply system and simplify battle damage repair. If cannibalization is not properly con-trolled, it can further reduce availability by rendering potentially repairable aircraft non-repairable.

1-13. EXPEDIENT REMOVALS.

Expedient removal procedures are designed and written for the purpose of expeditiously returning the aircraft back to combat and to ease the maintenance repair burden by making the component or structure easier to remove and replace.

Group assembly expedient removals are written to expedite the cannibalization of needed parts fromAH-64A Apaches that have severe damage. For example, an Apache may not be flyable due to large amounts of damage to the airframe, however, the usable vertical and horizontal sections can be cannibalized and rein-stalled on another Apache that has severe damage to the vertical and horizontal sections, but is otherwise flyable. By removing and replacing the vertical and horizontal sections as a single unit, the whole procedure can be performed quickly and efficiently. With group assembly procedures, the normal repair time can be cut 70 to 80 percent. Refer to Appendix D for these procedures.

1-14. WAIVER OF PRECAUTIONS.

Under combat conditions, BDR may be performed on helicopters which are under power while on the ground. While some of these BDR actions may require waiving of safety precautions, the cautions to protect personnel life should not be overlooked. Other similar precautions may be waived at the discretion of the commander. BDR fixes may be required in a chemically toxic environment or under other adverse battlefield conditions with severe limitations in personnel, facilities, equipment, and materials. Performance of repair tasks may be necessary while wearing protective gear. Decontamination procedures are outlined in FM 3-5.

1-15. FLIGHT CAPABILITY CLASSIFICATIONS.

Aircraft damaged in combat or repaired using BDR procedures shall be classified in three categories:

a. Condition 1 - Aircraft determined to be fully flight capable shall be classified as being in Condition 1. No flight restrictions shall apply to this classification for100 flight hours.
b. Condition 2 - Aircraft which are not fully flight capable but are capable of a self-recovery flight to a repair site shall be classified as Condition 2.

c. Condition 3 - Aircraft not classified as either Condition 1 or Condition 2 shall be classified as Condition 3. These aircraft may be ground-recovered or evacuated to a facility with required repair sources; cannibalized for spare components; or, as a last resort, destroyed in place to prevent enemy capture.

1-16. OPERATING CHARACTERISTICS.

This manual covers expedient repairs for the helicopter and its components. It is entirely possible that in a combat situation, the helicopter having undergone one or more of these repairs may suffer degradation of its normal operating characteristics (e.g., reduced speed, reduced load capability, reduced range, etc.), and still be able to carry out all or part of an assigned mission. Refer to Appendix F for information on mission capabilities with missing or damaged components/systems. The minimum functional combat capability (MFCC) criteria is as follows:

NOTE

These criteria may be waived for recovery or to meet tactical situation demands otherwise.

1-16.1. Flight Capability for Mission Completion (Condition 1).

a. Sufficient power delivered to main and tail rotors to accommodate lift capability for helicopter crew and cargo.
b. No fuel leaks which will curtail the intended length of flight.
c. No degradation of any component/system which will end in failure and curtailment of the intended mission.
d. Communications. Must have intercom communications within the helicopter and at least two tactical receiver-transmitter (R/T) units operating at full capability.

1-16.2. Flight Capability for Self-Recovery (Condition 2).

a. Must have power delivered to main and tail rotors at minimum acceptable limits.
b. Lift capability for crew members.
c. Flight controls at minimum function level acceptable for flight.

WARNING

Careful consideration should be given to the operation of the Identify Friend or Foe(IFF), Mode 4, avionics system. Failure of the IFF or failure to properly communicate with area air defense command prior to lift-off could result in an attack from friendly forces due to mistaken identity.

d. Instruments/avionics as required to meet mission needs.

1-17. TRAINING.

BDR by its nature involves fixes, bypasses, or jury-rigging, which is outside authorized standard repairs and may degrade the inherent safety of the helicopter. Therefore, BDR actions shall not supplement or replace standard maintenance practices during peacetime, nor will they be employed indiscriminately to facilitate training.

SECTION III. TASKS AND RESPONSIBILITIES

1-18. BATTLE DAMAGE ASSESSOR.

1-18.1. BDR Assessor. BDR assessors will assess aircraft battle damage. Their experience, technical knowledge, and the use of the BDAR manuals are the foundation of the ACM/BDR concept. Assessment is used to determine which aircraft need expedient repair, which can be flown with only minor attention, and which cannot be repaired in time to meet combat requirements. The object is to return the maximum number of aircraft to a flyable condition. It may be deter-mined that aircraft cannot be made flyable within time and/or manpower constraints. In this case they may be a source of repair parts.

1-18.2. Personnel Qualifications. BDR assessors must have a minimum aviation skill equivalent to an MOS 67R3F or 68X3F series technical inspector. Additional assessors may be aircraft maintenance officers and maintenance technicians who have completed the Aircraft Maintenance Officer Course (Phase II). They must also be assigned to aircraft maintenance positions.

1-19. ASSESSOR RESPONSIBILITIES.

The assessors primary responsibilities are to evaluate damage and determine repairs needed to quickly return aircraft to operational service. Resources must not be wasted on aircraft which cannot be repaired within specified time limits. Assessors will determine the requirements for and sequence of repairs. They establish an estimated time to complete repairs by skill. They also coordinate with the maintenance authority to establish an estimated time of availability.

1-19.1. AVUM/AVIM Level. At the AVUM/AVIM level, the assessor may seek assistance from specialists on various aircraft systems. However, the assessor is responsible for the assessment and recommendations given to the maintenance authority. The maintenance authority determines the priority for repairs.

1-19.2. Field Recovery Site. At the field recovery site, the assessor evaluates aircraft damage. He also recommends repairs to the maintenance authority. The maintenance authority decides what repairs can be made under the immediate tactical situation.

1-19.3. Restrictions. The assessor assists the maintenance authority in determining what restrictions must be placed on the aircraft because of BDR.

1-19.4. Repair Priority. When the assessment is complete, the maintenance authority determines the priority in which aircraft will be repaired based on the assessors reports.

1-20. QUALITY ASSURANCE AND QUALITY CONTROL.

A BDR assessor inspects and assesses battle damage and battle damage repairs. Evaluation of damage and recommendations for repairs are based on thorough knowledge of the aircraft. Technical guidance to repairers will be provided as necessary. Ideally, the unit air-craft technical inspectors will be used as BDAR assessors. However, combat conditions may require the unit aircraft maintenance officer or the maintenance technician to assume this role. The pilot in command, with crew-chief recommendations, may also be required to assess damage in critical situations. Therefore, these personnel must have a thorough knowledge of the aircraft and ACM/BDR.

1-21. BDR TOOLS AND MATERIALS.

BDR requires simplicity and speed. Authorized tools and materials shall be used where possible. There are six basic BDR kits: Electrical Connector Maintenance Kit, Fuel Tank Repair Kit, Emergency Wire Repair Kit, Fuel Line Repair Kit, Wire Repair Kit, and Electrical Test Kit. Refer to Appendix B for kit contents. With adequate precautions, AVUM or AVIM manufactured items can be used to expedite repairs. Cosmetic repair of the structure may be accomplished with field expedients such as green tape and non-aircraft materials. BDR techniques are limited only by safety considerations and the experience and skill of the repairman.

1-22. BATTLE DAMAGE ASSESSMENT PROCEDURES.

In peacetime, flight safety requires restoring damaged structure to its original condition. Consideration is given to strength, corrosion protection, and cosmetic appearance. Repairs are devised by the aircraft engineering authority where expert advice is available and time is not a critical factor. During combat, damage will be quite different, as will the repairs. Time will be of the essence and the engineering authority and advice will not be available. Sufficient strength to maintain operational flying is the primary concern of the assessment and repair. In some aircraft, extensive damage may re-quire little work; in others the smallest crack could be catastrophic. When a damaged aircraft is flown, it can be assumed that some structural strength is still present. However, this does not necessarily mean that there is sufficient strength remaining to carry out the next sortie, as additional weight of fuel and armament must be considered. An assessor must bring together the facts concerning the damage, the role the aircraft has to fulfill, and the repairs necessary for the aircraft to carry out its next sortie.

This manual provides guidelines for use in assessing BDR to the AH-64A helicopter. It will direct the assessor to an expedient BDR fix or to the standard system fix in the TM 1-1520-238-23 manual if an expedient BDR repair does not exist. The triage assessment chart(paragraph 1-24) will assist in BDR assessment.

Use the following guidelines to find and fix damage to the helicopter. Keep in mind that damage can be sustained on the ground or in flight. The helicopter location can have a considerable effect on the assessment. The following assessment shall be accomplished:

a. If possible and time permits, inspect and check the helicopter using the operator's checklist (TM 1-1520-238-CL), operator's manual(TM 1-1520-238-10), and other records and forms kept in the aircraft log book. At the same time be looking for obvious damage to the aircraft.
b. If possible, use standard troubleshooting recommendations in the applicable TM.
c. If damage is found, determine its effect on the helicopter's mobility and capability.
d. If the repair of the damage cannot be deferred or the damage cannot be repaired, determine whether aircraft should be recovered, cannibalized, or destroyed.
e. If the damage can be repaired, do one of the following:
(1) Replace damaged part with a serviceable part.
(2) Replace damaged part with a suitable substitute if one exists.
(3) Apply this manual for BDR action.
f. After repairing the damage, replace all lost fluids/ lubricants. If the fluids/lubricants specified by the TM are not available, refer to Appendix E for applicable substitute material/parts.
g. If necessary, perform applicable maintenance operational check.

1-23. AIRCRAFT ZONES.

Aircraft zones (Figure 1-2) are as follows:

Aircraft Zones

Zone #1 (FF)	Forward Fuselage
Zone #2 (CF)	Center Fuselage
Zone #3 (AF)	Aft Fuselage/Tailboom
Zone #4 (WI)	Wings
Zone #5 (CS)	Crew Station
Zone #6 (EN)	Engine Nacelles
Zone # 7 (EM)	Empennage (Horizontal Stabilator and Vertical Stabilizer)
Zone #8 (MR)	Main Rotor/Upper Controls

1-24. TRIAGE ASSESSMENT CHART.

The triage assessment chart (Figure 1-3), guides the assessor through the helicopter's capability so that all capabilities are evaluated. If a fault is found, the chart will direct the assessor to the chapter for the functional group which contains the fault. The BDR assessment procedure will refer to a guide fix in this manual, a standard TM 1-1520-238-23 repair if it is feasible, or a higher AVIM level of repair if extent of damage, time constraint, tooling requirements, repair part or material, and any other necessary requirements are only available at a higher level of maintenance.

The triage assessment chart is dedicated to a "quick look aircraft zone" inspection. This technique is intended to quickly identify critical damage which is not repairable or would require extensive repair (high man-hours) times. Each "aircraft zone" contains several subsystems, each having critical components (mainly airframe structure and aircraft wiring). The quick look visual "aircraft zone" inspection will ensure a successful aircraft triage. Aircraft zones are identified in paragraph 1-23.

Ballistic damage to a wire harness cannot be classified as critical or non-critical. Function of the equipment will determine the condition of the aircraft. Wire harness damage can be repaired, but in severe cases troubleshooting and repair can expend hundreds of man-hours.

Typically, a wire harness will be routed through all zones of the AH-64A and interconnect several components and subsystems. The complexity of the wire harness repair is dependent on the number of components and subsystems involved. When damage exists, the assessor needs to decide and recommend a deferrable, repairable or non-repairable action. Man-hours, materials, tools and equipment will need to be estimated. In certain cases, the repair man-hours can be reduced by limiting the repair to essential equipment, permitting the aircraft to be used at a reduced capability. Deferrable, repairable or non-repairable actions are decided on a per aircraft basis taking into account type/amount of damage and need for aircraft.

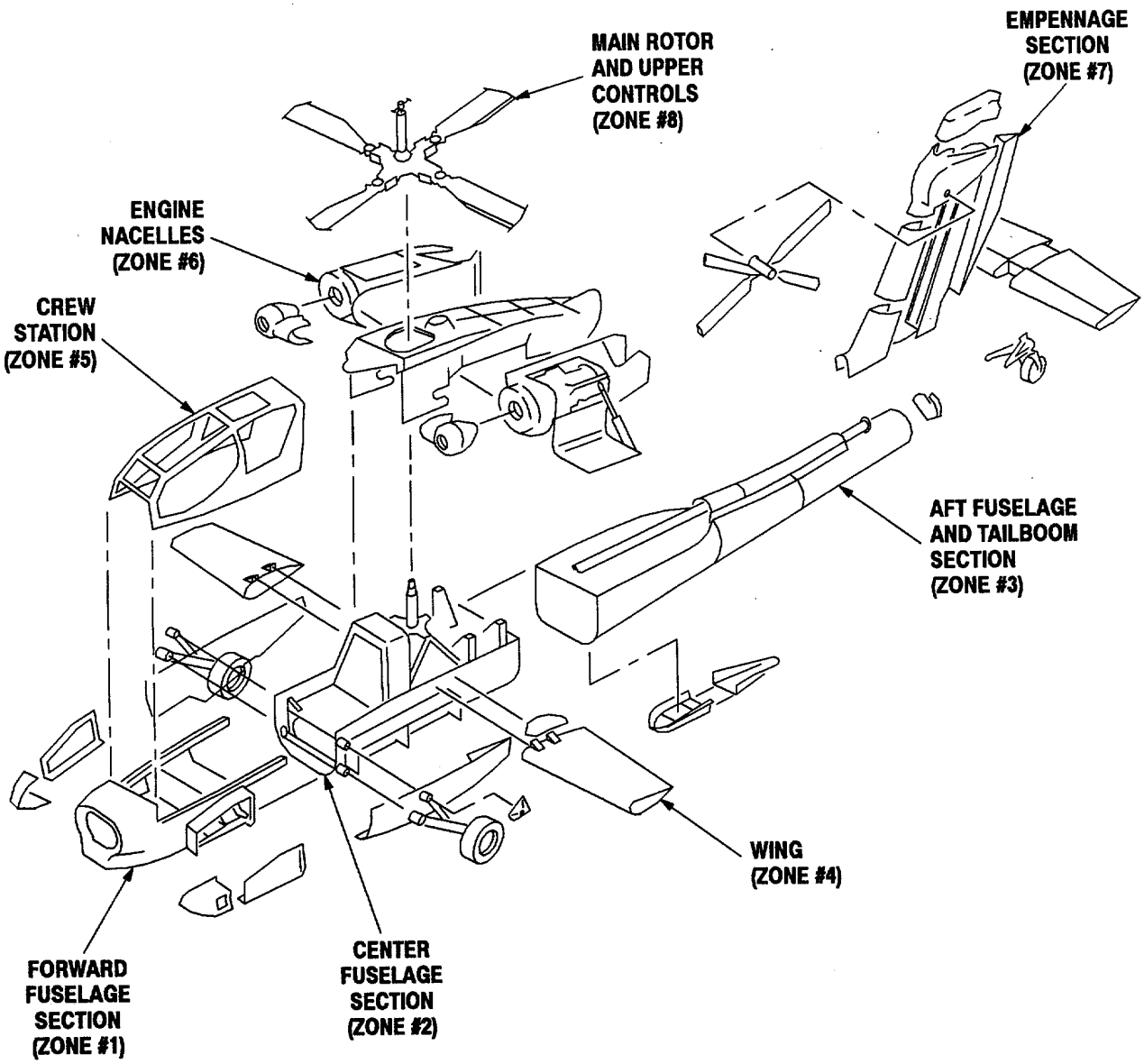

M102-188

Figure 1-2. AH-64 Aircraft Zones

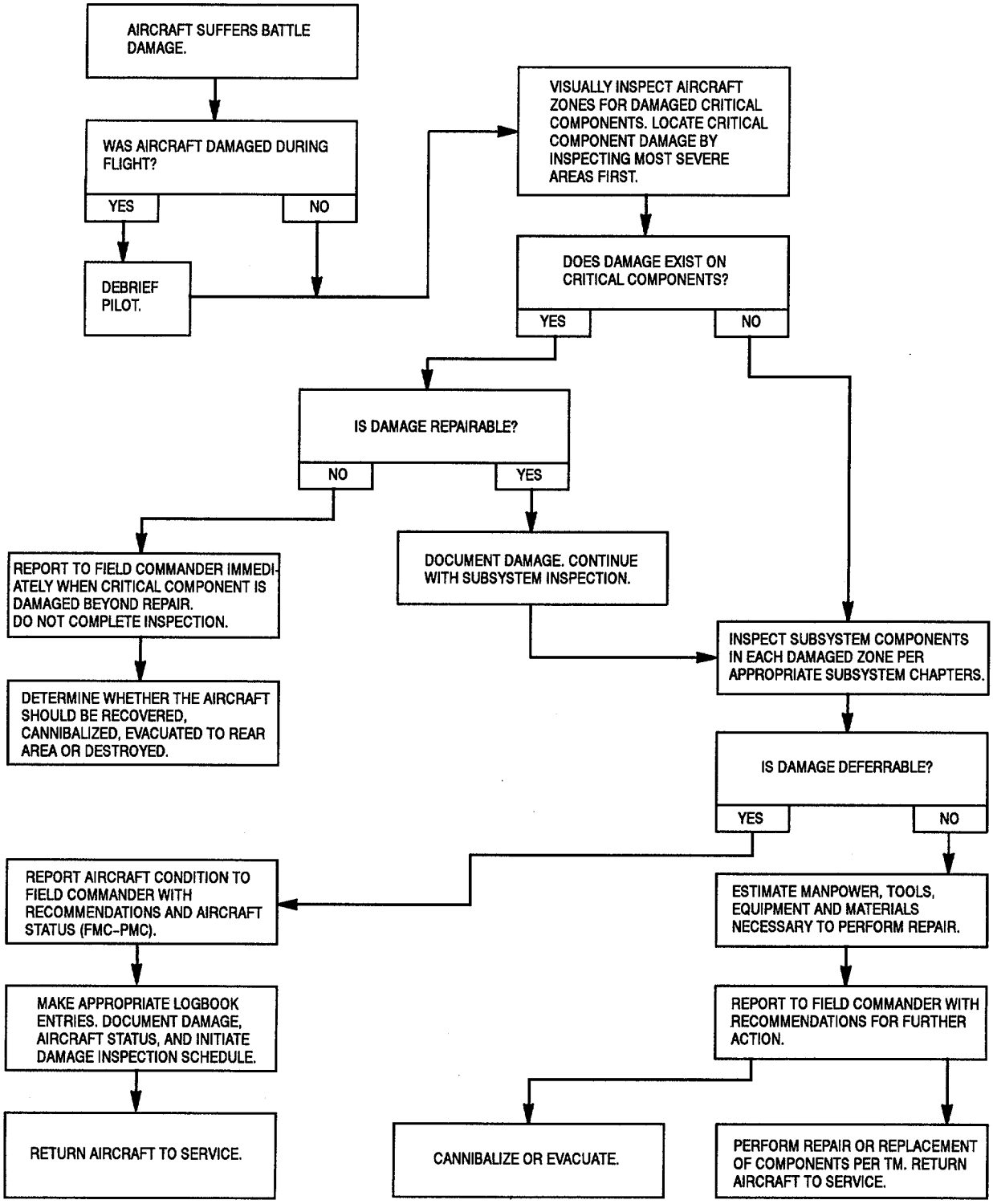

M102-003

Figure 1-3. Triage Assessment Chart

Start the quick look visual "aircraft zone" inspection with the most severely damaged portion of the aircraft to the scarcely damaged areas. Visually inspect the aircraft zone structure and related subsystems for critically damaged components. Refer to Tables 1-3 thru 1-10 to identify critical components unable to tolerate damage without immediate repair. When non-repairable or extensive repair time damage is found, stop triage inspection and report findings to appropriate individuals for aircraft disposition. When quick look visual "aircraft zone" inspection is completed, proceed with detailed subsystem assessment and operational inspection following the triage assessment chart.

Table 1-3. Zone #1 - Forward Fuselage Critical Components

Zone Location	Subsystems Located in Zone	Critical Components (Non-Deferrable) in Zone
F.S. 0.0 - 120.0 W.L. 0.0 - 138.0	Airframe, Hydraulic/Pneumatic, Electrical, Flight Controls, Utility, Avionics, Area Weapons	Frame - F.S. 115.0 (Figure 2-53)

Table 1-4. Zone #2 - Center Fuselage Critical Components

Zone Location	*Subsystems Located in Zone*	*Critical Components (Non-Deferrable) in Zone*
F.S. 120.0 - 280.0 W.L. 0.0 - 150.0	Airframe, Landing Gear, Drives, Hydraulic/Pneumatic, Electrical, Fuel, Flight Controls, Area Weapons	Bulkhead - F.S. 125.0 (Figure 2-53) Frame - FS. 176.00 (Figure 2-53) Frame - FS. 199.75 (Figure 2-53) Frame - FS. 214.50 (Figure 2-53) Frame - FS. 230.0 (Figure 2-53) Frame - F.S. 247.71 (Figure 2-53)

Table 1-5. Zone #3 - Aft Fuselage/Tailboom Critical Components

Zone Location	Subsystems Located in Zone	Critical Components (Non-Deferrable) in Zone
FS. 280.0 - 590.0 WL. 0.0 - 140.0	Airframe, Drives, Hydraulic/ Pneumatic, Electrical, Flight Controls, Avionics, Landing Gear	Stringer 2L (Figure 2-53) Stringer 2R (Figure 2-53) Frame - FS. 530.09 (Figure 2-53) Frame - FS. 547.15 (Figure 2-53) (Refer to Figure 2-29 for frames 530.09 and 547.15 critical damage areas.)

Table 1-6. Zone #4 - Wings Critical Components

Zone Location	Subsystems Located in Zone	Critical Components (Non-Deferrable) in Zone
F.S. 188.0 - 240.0 WL. 0.0 - 145.0	Airframe, Hydraulic/Pneumatic, Electrical, Fuel, Utility, Mission Equipment	N/A

Table 1-7. Zone #5 - Crew Station Critical Components

Zone Location	Subsystems Located in Zone	Critical Components (Non-Deferrable) in Zone
FS. 58.0 - 158.0 W.L. 112.0 - 172.0 W.L. 129.0 - 183.0	Airframe, Power Plants, Hydraulic/Pneumatic, Instruments, Electrical, Flight Controls, Utility, Environmental Control, Avionics	N/A

Table 1-8. Zone #6 - Engine Nacelles Critical Components

Zone Location	Subsystems Located in Zone	Critical Components (Non-Deferrable) in Zone
FS. 158.0 - 310.0 W.L. 145.0 - 257.0	Airframe, Power Plants, Rotors, Drives, Hydraulic/Pneumatic, Electrical, Fuel, Flight Controls, Utility, Environmental Control, Auxiliary Power Unit	N/A

Table 1-9. Zone #7 - Empennage Critical Components

Zone Location	Subsystems Located in Zone	Critical Components (Non-Deferrable) in Zone
FS. 503.0 - 597.0 W.L. 140.0 - 242.0	Airframe, Landing Gear, Rotors, Drives, Hydraulic/Pneumatic, Electrical, Flight Controls, Utility, Avionics	N/A

Table 1-10. Zone #8 - Main Rotor/Upper Controls Critical Components

Zone Location	Subsystems Located in Zone	Critical Components (Non-Deferrable) in Zone
F.S. 198.0 W.L. 189.0 and up	Airframe, Rotors, Drives, Flight Controls, Utility	N/A

1-25. LOCATING ENTRANCE AND EXIT WOUNDS.

1-25.1. Entrance and Exit Wounds. Locating all entrance and exit wounds is an important first step in the damage inspection procedure. Use the aircrew debriefing to identify the areas where hits are suspected. Thoroughly examine the outside surface of the aircraft in these regions to locate all entrance wounds. Entrance wounds caused by the various threat projectiles are generally of the following description:

1-25.1.1. Armor-Piercing (AP) and Armor-Piercing-Incendiary (API) Projectiles. Smooth holes, round or oblong in shape, depending on the angle of the projectile at impact.

1-25.1.2. Delay-Fused High-Explosive-Incendiary (HEI) Projectiles. Same as the API projectile.

1-25.1.3. Proximity and Point-Detonation HEI Projectiles. Large irregular wounds accompanied by deformation and tearing of metal and numerous fragment holes.

1-25.1.4. Bomb and Artillery Shell Fragments. Irregular holes of various sizes accompanied by deformation and tearing of metal.

1-25.2. Marking. Clearly mark all entrance wounds on the structure and record them on DA Form 2408-13-3 following the instructions given in Figure 1-4.

1-25.3. Exit Wounds. It is also important to locate all exit wounds in the airframe. The number of exit wounds may not correspond to the number of entrance wounds. Also, the exit wounds may not be aligned with the flight path of the projectile. A single projectile may cause multiple exit wounds. This is caused when the projectile breaks apart or produces shrapnel from contact with obstructions as it passes through the aircraft. If a projectile is stopped by a large object within the aircraft, there may be no exit wounds. Projectiles that are deflected or ricochet may cause exit wounds away from the expected path. The many fragments and types of damage caused by the HEI projectile may result in many combinations of exit wounds.

1-25.4. Marking Exit Wounds. Carefully examine the aircraft outer skin over a wide area opposite the side of the entrance wounds. Look and feel for small holes and cracks. Clearly mark exit wounds on the structure. Then record them on DA Form 2408-13-3. Make notations if any of the following conditions are observed:

a. No exit wound can be found or the number of exit wounds is fewer than expected. This may indicate that projectiles may be imbedded in internal components or structure.
b. The number of exit wounds is larger than expected. This may indicate that the projectile either broke apart upon impact with an internal object or produced shrapnel upon impact with internal structure or components.
c. Exit wounds are not aligned with the estimated flight path of the projectiles. This may indicate that there were internal deflections or ricochets.
d. Exit wounds are smaller than expected. This may indicate that the projectile broke apart and pieces re-main inside the aircraft.
e. For additional information on combat threats, refer to Section IV of this Chapter.

1-26. ESTIMATING PROJECTILE PATHS AND FRAGMENT PATTERNS.

1-26.1. Solid Projectiles.

The smaller AP projectiles have enough energy to penetrate most types of airframe structure and most aircraft components. They may be stopped or deflected by large steel or titanium components. These components are found in gearboxes and major structural fittings. The large AP projectiles have enough energy to penetrate all of the components of the aircraft. They will usually travel through the entire airframe without much deflection.

Where the only obstacles are airframe structure and small components, it may be assumed that an AP projectile has travelled in a fairly straight line from en-trance to exit. This may be confirmed by the approximate alignment of the entrance and exit wounds and the absence of any indications of a ricochet or deflection(See Paragraph 1-25). After gaining access to the inside of the structure, a wire or a string may be drawn between the entrance and exit wounds to aid in defining the projectile path.

In areas of the airframe containing large objects such as major fittings or gearboxes, the projectile may not have travelled in a straight line. This may be confirmed by:

a. Absence of an exit wound.
b. Presence of multiple exit wounds.
c. Misalignment of exit wounds with entrance wounds.

After gaining access inside the airframe, reconstruct the projectile path between the entrance and exit wounds. If the projectile has broken apart or has created shrapnel, multiple projectile paths may have to be defined.

1-26.2. Fragment Patterns.

The HEI is a much more complex threat. It involves many individual penetrators and the complications produced by explosive blast and over pressure. Deter-mining the path of the destructive elements is more difficult. The many fragments produced by the exploding HEI are focused in expanding cones. The cones travel forward and outward form the point of the detonation. The cone angle will be dependent upon the projectiles velocity. Most of the fragments will be concentrated in a cone with an enclosed angle of about 30° to 40°. For low velocity projectiles, the angle of the cone may approach80°.

When inspecting for HEI damage, estimate the fragment pattern. Use a cone angle of 45° for the first estimation. If the projectile did not enter the aircraft at right angles to one of the major aircraft centerlines, estimate the angle at which the projectile penetrated the structure. Estimate the patterns during the inspection of the aircraft interior.

1-27. TAGGING/IDENTIFYING BDR REPAIRS.

Recording of BDR repairs and the use of status symbols, as defined in DA PAM 738-751, will be completed as soon as practical to indicate any limitations and restrictions or required standard repairs. In addition to recording all damage, the area damaged will be marked on the aircraft or component part using damage assessment markings as shown in Figure 1-4. Refer to Paragraph 2-17 for additional information on labeling and recording damage to the airframe structure.

1-28. MAINTENANCE OF FORMS.

All maintenance inspections, battle damage assessment inspections, battle damage, and BDR will be identified on the appropriate aircraft forms; DA Form2408-13-½408-13-1-E, DA Form 2408-13-3, DA Form2408-14/2408-14-E, DA Form 2408-16/2408-16-E, and DA Form 2408-18/2408-18-E, in accordance with DAPAM 738-751.

1-29. REPORTS.

All required written reports for BDR fixes are found in DA PAM 738-751. If communication capability is dam-aged, the aircraft commander should approach the nearest friendly radio and make his report if possible. The report should include these essentials:

a. Aircraft damage (out-of-action or function partially impaired).

b. Location of aircraft.

c. Defense status.

d. Mobility.

e. Personnel report.

f. Current and anticipated hostile action.

g. Anticipated BDR fixes and repair time.

MARKINGS	MEANING
	TO INDICATE DAMAGE HAS BEEN ASSESSED AND EVALUATED: DRAW A CIRCLE AROUND THE DAMAGE.
	TO INDICATE STRUCTURAL REPAIRS ARE REQUIRED: DRAW A SECOND LINE ABOUT 1/4 TO 1/2 WAY AROUND THE INITIAL CIRCLE, THEN DRAW SLASHES OR CROSSHATCH BETWEEN THE TWO CIRCULAR LINES.
	TO INDICATE DAMAGE TO SYSTEMS REQUIRING REPAIRS: DRAW A SERIES OF "CURLY CUE" LINES ABOUT 1/4 TO 1/2 WAY AROUND THE INITIAL CIRCLE.
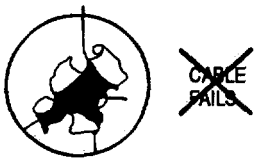	A LARGE CROSS DRAWN THROUGH THE INSTRUCTION MARKINGS INDICATES REPAIRS HAVE BEEN MADE.
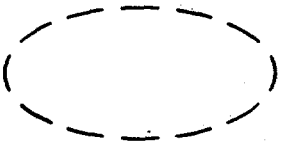	TO INDICATE REPAIR INSTRUCTIONS APPLY TO INTERNAL DAMAGE: DRAW A DASHED CIRCLE AROUND THE REPAIR INSTRUCTIONS. **NOTE** WRITTEN INSTRUCTIONS WITH NO CIRCLES APPLY TO EXTERNAL DAMAGE.
	TAG
	REPRESENTS DAMAGE

M102-008

Figure 1-4. Damage Assessment Markings (Sheet 1 of 3)

WRITTEN INSTRUCTIONS	MEANING
See Me – print name and rank (signature)	See assessor or whoever has signed written instructions for additional information.
Names of parts to be repaired (item, skin, stringer, etc.)	Where compound damage occurs, the names or abbreviations of specific items can be written adjacent to the damage to clarify repair instructions.
Full	A full strength repair is required.
Partial	A partial strength repair is required in accordance with specific aircraft BDR manual.
OK	No repairs required – damage is within acceptable limits for battle conditions.
?	Continual assessment or re-inspection is required after each sortie.

Instructions markings for system are in two parts:

(1) Repair instruction markings and meanings are shown on this sheet and are used to indicate repair actions required.

(2) System identification – when known, identify the system using markings shown on sheet 3 of this figure.

MARKINGS	MEANING
Fix	Repair the damaged system in accordance with approved standard BDR techniques for type of system, item, high pressure, low pressure, etc.
Cap	Terminate or block the system to prevent leakage.
Repl	Replace damaged part – repairs not acceptable.
OK	No repairs required.
Tag	Repair instructions are written on tags tied to individual damaged lines/components.

Figure 1-4. Damage Assessment Markings (Sheet 2 of 3)

System identification markings are primarily abbreviations of the system.

MARKINGS	SYSTEM/MEANING
Sys	Damage to system unknown
Fuel	Fuel
Hyd	Hydraulic
HP	High Pressure
LP	Low Pressure
Elect	Electrical
AV	Avionics
Flt Cont	Flight Control
Fwd Rotor	Forward Rotor Group
Aft Rotor	Aft Rotor Group
Air	Pneumatic
Air Cond	Air Conditioning
BL Air	Bleed Air System
N_2	Nitrogen
O_2	Oxygen
Eng Contr	Engine Control
Pow Tr	Power Train

NOTE

More than one identification marking may be used to describe the system, i.e., HP, Hyd.

Figure 1-4. Damage Assessment Markings (Sheet 3 of 3)

SECTION IV. COMBAT THREATS

1-30. THREAT DESCRIPTION.

The primary threats confronting Army helicopters in combat include the armor-piercing (AP) and armor piercing-incendiary (API) projectiles, the high-explosive-incendiary (HEI) projectiles, and several types of ground-to-air and air-to-air missiles. Nuclear, biological, and chemical (NBC) warfare also poses a threat to the successful accomplishment of the aviation mission. In addition to the threats helicopters may encounter in flight, they will be exposed to damage by bombs, mortars, and artillery while on the ground.

1-31. ARMOR-PIERCING AND ARMOR-PIERCING-INCENDIARY PROJECTILES.

AP and API projectiles will cause most of the damage. These projectiles consist of a hard core, designed for maximum penetration. The API projectile also has a thermally active filler. The active filler is located in front of the passive core. Upon impact, the core penetrates the outside of the target. This gives the projectile a fire starting capability if flammable materials are present.

1-31.1. Armor-Piercing Projectile. The damage caused by an armor-piercing projectile depends on its mass, velocity, and angle at impact. The primary damage is caused by the penetrator.

1-31.2. Armor-Piercing-Incendiary Projectile. API projectiles can cause major damage to an aircraft if the fuel cells are penetrated. Bulging or rupturing of the fuel cell walls and surrounded structures can be caused by hydraulic ram effects. The incendiary mechanism can result in fires and explosions. Intense heat from fires may reduce the temper and strength of surrounding metals.

1-32. HIGH-EXPLOSIVE-INCENDIARY PROJECTILES.

HEI projectiles will create much greater repair problems. The HEI projectile consists of a fuse mechanism, explosive charge, tracer element, and an outer casing (Figure 1-5).

1-32.1. Fuses. Two types of fuses are used: time delay and proximity. The time-delay fuse is activated when the projectile strikes a surface, delaying detonation of the charge for varying lengths of time. The proximity or point detonation fuses are activated and detonation occurs upon or just prior to contact with the target. Detonation causes the shell casing to rupture. The projectile breaks into fragments and accelerates them to high velocities. The velocity of the projectile added to the velocity of the fragments caused by the explosive charge focus the fragments into a cone (Figure 1-6). In addition to the fragments, the explosive charge produces a shock wave which travels above the speed of sound, initially ahead of the accelerating fragments. Structures close to the point of detonation are stressed by the shock wave and over pressure before the fragments impact. The damage mechanisms associated with the point detonation or proximity-fused HEI are basically the same as the time-delayed fused HEI. The exception is the blast and fragmentation effects occur at the target surface and continue into the interior structure. Overpressure effects are generally less severe because the explosion does not take place inside the fuselage.

1-32.2. Effects. The effect of an HEI impact on metal airframe structure depends on the fuse mechanism and the configuration of the structure. For light skin and stringer construction, the delay-fused projectile normally produces a relatively clean penetration on the entry side. In an empty enclosed structure such as a tailcone, exploding fragments penetrate the opposite skin and produce massive damage. Total disintegration occurs in the path of the large, closely-spaced, high energy fragments directly ahead of the projectile. Flying fragments cause numerous penetrations in the surrounding structure. Shock wave and overpressure effects produce tearing and distortion of the metal. When the HEI projectile strikes major structures such as frames and beams, damage may include the loss of large sections of material and buckling and distortion of the structure. In cases where the projectile impacts a thin light structure such as a tail fin, complete penetration may occur before the explosion takes place. This will greatly diminish the damage sustained.

1-33. NBC WARFARE.

The primary countermeasure to the NBC threat must be the ability to continue ACM/BDR while subjected to attack. Flight and ground support personnel must be constantly aware of the effects that NBC weapons can

have on their operations. Personnel must be familiar with detection and decontamination techniques, protective clothing and equipment. The standard decontaminants and decontamination procedures currently used will ruin many types of aviation equipment and materials. However, simple common sense measures can be used to avoid becoming contaminated or at least reduce the amount of contamination. During inspections, battle damage repair, and cannibalization actions, maintenance personnel must wear NBC protective clothing and must partially decontaminate work areas and components.

1-34. THREATS ON THE GROUND.

Aircraft on the ground may be exposed to mortars, bombs, and artillery. Direct hits or hits near the aircraft will probably damage the aircraft beyond repair. Damage which can be repaired may occur when a device explodes some distance away and the aircraft is struck by fragment and blast. Fires may also cause damage.

1-35. STRUCTURE DAMAGE MODES.

1-35.1. Projectile Damage. The principle airframe damage modes are defined in Table 1-11. The most frequent damage is caused by ballistic projectiles. These projectiles include solid penetrators such as:

a. AP and API rounds.
b. Various-sized fragment from the HEI threat.
c. Larger metal fragments from bombs, missiles, and artillery.

These projectiles travel at a high velocity and may have great mass. Their kinetic energy allows them to penetrate deeply into aircraft structures, causing much damage. Damage caused by these projectiles will be complete penetration in the form of holes and section losses. Ricochets cause spalls and gouges. The stress of the impact may cause cracks. Solid projectiles and fragments may also be imbedded in structures. Petalling is a form of damage caused by projectiles when they penetrate thin skins, causing the metal to tear and deform.

1-35.2. Blast and Overpressure Damage. HEI explosive threats pose hazards in addition to projectile damage. The explosive blast may prestress structures, causing them to buckle, cripple, and misalign. Separation of joints and loss of mechanical fasteners may also appear. When an explosion occurs within enclosed sections of an airframe, it causes an overpressure which may overstress structures and produce structural deformation.

1-35.3. Fire Damage. API and HEI incendiary threats have a fire-starting capability if flammable materials are present. Intense and prolonged heat may weaken and damage structural materials. High temperatures reduce the hardness of metals, reducing their strength and stiffness. Metals may melt under extreme heat. Heat-damaged metals may yield and crack under the continued stress of flying.

1-35.4. Secondary Damage. All of the damage modes described above are the direct result of combat. When damage to the aircraft causes one or more structural parts to become unserviceable, the remaining parts may be overstressed and damaged as the aircraft continues its flight. This secondary damage may be in the form of cracks, crippling, or buckling and loss or damage to mechanical fasteners. Secondary damage may happen away from the site of the original battle damage. This will depend on how the stress loads are redistributed in the structure when parts are removed or are unserviceable.

Table 1-11. Ballistic Damage Modes

Damage Mode	Alternate Descriptions	Definition	Type of Materials and Structures affected
Break		Gap or opening in a weld or bondline.	Weldments; Bonded components.
Buckle	Bend Kink Collapse Cripple Distortion	Deformation caused by compressive overload (usually axial) which causes material to be permanently displaced from its natural shape or form.	Light, axially loaded members such as stiffeners and stringers.

Table 1-11. Ballistic Damage Modes - Cont

Damage Mode	Alternate Descriptions	Definition	Type of Materials and Structures affected
Crack	Fracture	A narrow break or fracture in surface or through the material.	
Crushed	Collapsed	Deformation caused by compressive overload (usually transverse) which causes material to be permanently displaced from its natural shape or form.	Sandwich panels and light structures such as fairings.
Debond		Separation of adhesive bondline.	Bonded components such as sandwich panels.
Dent		An indentation or depression which does not rupture the material.	All materials which yield (plastically deform) under impact stress, especially light metal skins.
Fastener Damage		Sheared, stripped, loose, or missing fasteners.	All mechanically assembled components.
Fretting	Wear Scoring	Removal or scoring of surface of material caused by friction forces.	All mechanically assembled components which experience relative movement between faying surfaces.
Gouge	Groove	Groove, channel, or cavity scooped or cut from surface of material.	Primarily thick, relatively soft materials such as castings.
Hole	Puncture Penetration	An opening or cavity in or through material.	All materials and structures.
Petalling		Jagged material around hole that is curved back from surface plane in petal-like fashion. (Associated with penetration damage to sheet metal panels.)	Sheet metal panels, webs, and bulkheads.
Spall	Chip	A chip or fragment removed from surface or edge of material, usually on the back surface of part that has been ballistically penetrated.	Primarily thick metal components such as forgings and castings.
Tear	Split	Jagged, irregular split or rupture in material.	Primarily light metal components such as skin panels.

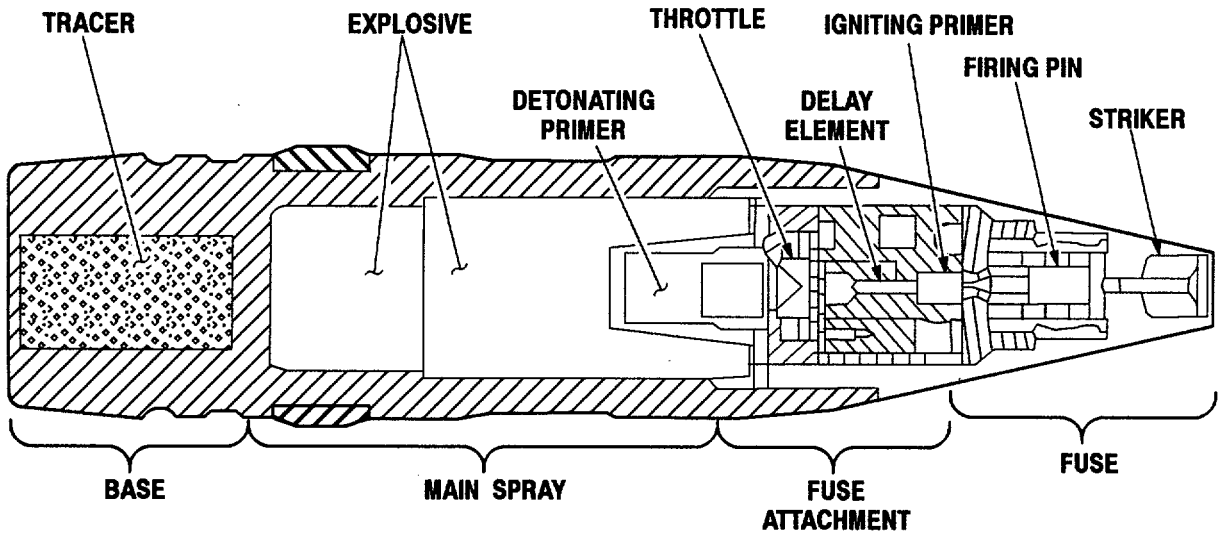

M102-006

Figure 1-5. Typical HEI Projectile

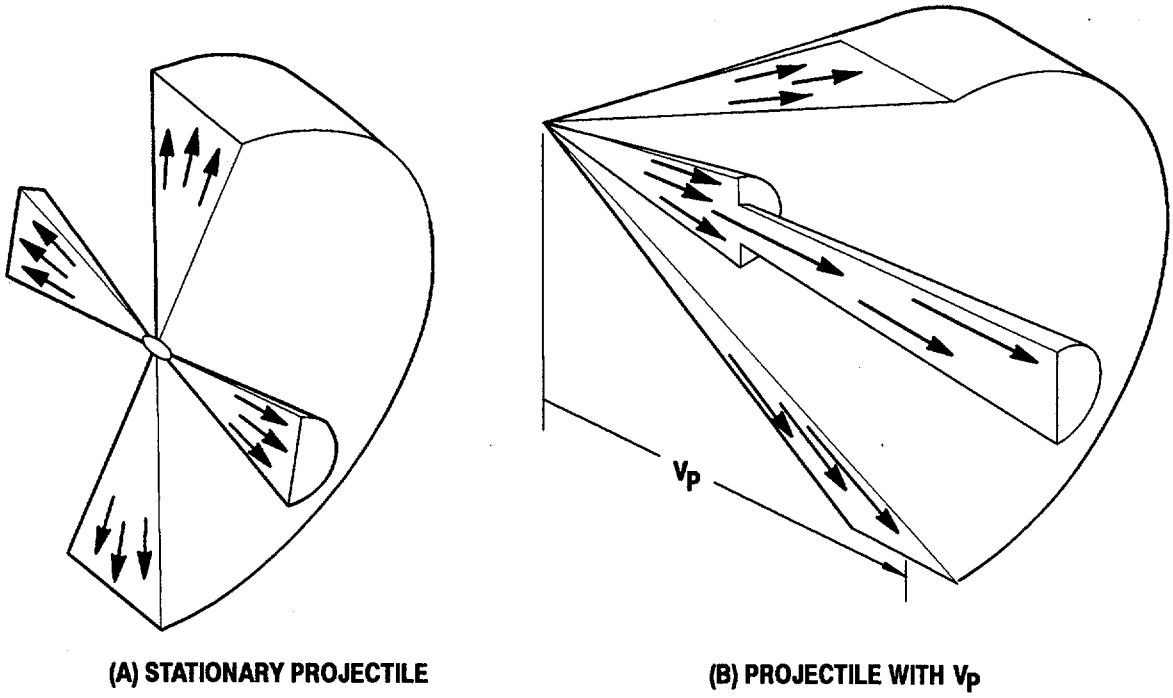

M102-007

Figure 1-6. Fragmentation Patterns Associated with a Typical HEI Projectile

CHAPTER 2
AIRFRAME

BDAR TM PROCEDURES. THE EXPEDIENT REPAIR PROCEDURES IN BDAR TM ARE FOR USE IN COMBAT ONLY. STANDARD MAINTENANCE/REPAIR PROCEDURES ARE TO BE USED AS SOON THEREAFTER AS POSSIBLE.

SECTION I. INTRODUCTION

2-1. SCOPE.

This chapter contains description, location, serviceability criteria, cannibalization criteria, standards, and repair procedures for the airframe primary structures and lightly loaded secondary structures. Repair of battle damage to the airframe during combat may be deferrable depending on the damage or component function.

2-2. SYSTEM DESCRIPTION AND LOCATION.

The airframe system (Figures 2-1 thru 2-6) is a semi-monocoque constructed structure consisting of the fuselage, wings, vertical stabilizer, and horizontal stabilator. Refer to TM 1-1520-238-23 for a description of the AH-64A helicopter airframe and operation.

2-3. ASSESSMENT PROCEDURE.

Assessment is used to determine if an aircraft with battle damage can be safely flown without repair. It will be for a one-time evacuation flight or for return to combat. It involves three important tasks:

Damage Inspection - to locate and classify the damage.

Damage Evaluation to determine whether damage to structural capability has degraded below a minimum acceptance level (the point of failure).

Repair Deferrability Assessment to determine whether an aircraft with battle damaged structural members must be repaired or can be safely flown without repair.

2-3.1. Damage Inspection (Section II). The first assessment task is damage inspection. It begins with a debriefing of the flight crew. A debriefing report will be prepared and evaluated. This is followed by inspecting for damage, labeling of damaged parts, and preparing a damage report.

2-3.2. Damage Evaluation (Section III). All damage is immediately scheduled for repair if the combat situation permits. In emergencies, the unit commander may defer repair of noncritical airframe damage. The first task in assessing repairs that may be deferred is damage evaluation. Its purpose is to evaluate the damage to individual structural members and classify them as serviceable or failed. This is done by comparing the observed damage to each member with damage limits provided in this manual. Structural members with damage exceeding the limits are classified as failed. If damage to the airframe does not exceed the published limits, repair of the damage can be deferred for up to 100 hours of combat service.

2-3.3. Repair Deferrability Assessment (Section IV). If damage limits are exceeded, a further assessment must be made to determine if repair of the damaged structure can be deferred. This is the repair deferrability assessment. The assessment compares the recorded structural damage with damage deferrability standards provided in this manual. If the deferrability standards are satisfied, repair of the damage can be deferred. Deferment will be for a one-time flight of the aircraft or for up to 100 hours of combat service. Structural damage exceeding the published standards is nondeferrable and is scheduled for immediate repair. When repair of damage is deferred, periodic monitoring is performed to inspect for damage growth.

2-4. CANNIBALIZATION CRITERIA.

The airframe components that are considered crucial during combat are identified by the airframe cannibalization candidates list (Table 2-1). Whenever possible,

these components should be cannibalized from other aircraft that are incapable of returning to base or considered unable to fly. This list is a prediction based on evaluations of the components' susceptibility of damage, deferrability, and repairability. This is not an exhaustive list of all components which may be cannibalized. When needed, any component may be cannibalized and used provided it is acceptable using , the serviceability criteria provided.

Table 2-1. Airframe Cannibalization Candidates

Nomenclature	Part Number
Vertical Stabilizer (Figure 2-1)	7-311122600
Main Rotor Support Mast (Figure 2-3)	7-311160020
Main Rotor Base Support Struts (Figure 2-3)	7-311160055-½ 7-311160060-½ 7-311160070-½ 7-311160085-½
Horizontal Stabilator (Figure 2-1)	7-311123600
RH Wing Assembly (Figure 2-1)	7-311130200-602
LH Wing Assembly (Figure 2-1)	7-311130200-601
Main Rotor Support Mast Base (Figure 2-3)	7-311160010
Mixer Support Bolt (Figure 2-3)	7-311160044
Mixer Support Assembly (Figure 2-3)	7-311160040-5
Longitudinal Servocylinder Bracket (Figure 2-4)	7-311511175-11
Lateral Servocylinder Bracket (Figure 2-4)	7-311511139-5

2-5. REPAIR PROCEDURE INDEX.

Repair Procedure	Para
Repair Concept 1: Semi-Monocoque Structure Involving Damage to Skins And Stringers (Stringer Repaired Externally).	2-47
Repair Concept 2: Semi-Monocoque Structure Involving Damage to Skin, Stringer, and Frame (Frame Repaired with Straight Channel Section, Stringer Repaired Externally)	2-48
Repair Concept 3: Semi-Monocoque Structure Involving Damage to Skin, Stringer, and Frame (Frame Repaired with Thick Aluminum Plate, Stringer Repaired Externally)	2-49
Repair Concept 4: Vertical Spar Involving Damage to Spar Cap and Web	2-50
Repair Concept 5: Stabilator Spar Involving Damage to the Spar Cap and Web	2-51
Repair Concept 6: Forged/Machined Frame Involving Damage to Frame Cap and Web	2-52
Repair Concept 7: Bulkhead Involving Damage to the Web and Support Beam (Repair External)	2-53
Repair Concept 8: Beams Involving Damage to the Web and Outer Cap	2-54
Repair Concept 9: Beams Involving Damage to the Web and Outer Cap (Repair External)	2-55
Electro Magnetic Interference (EMI) Panel Coating Repair	2-56

2-6. AIRCRAFT ZONE LOCATION.

The airframe is divided into aircraft zones for the purpose of damage assessment (Figure 1-2). The top level zones correspond to the major sections of the airframe:

Aircraft Zones	
Zone #1 (FF)	Forward Fuselage
Zone #2 (CF)	Center Fuselage
Zone #3 (AF)	Aft Fuselage/Tailboom
Zone #4 (WI)	Wings
Zone #5 (CS)	Crew Station
Zone #6 (EN)	Engine Nacelles
Zone # 7 (EM)	Empennage (Horizontal Stabilator and Vertical Stabilizer)
Zone #8 (MR)	Main Rotor/Upper Controls

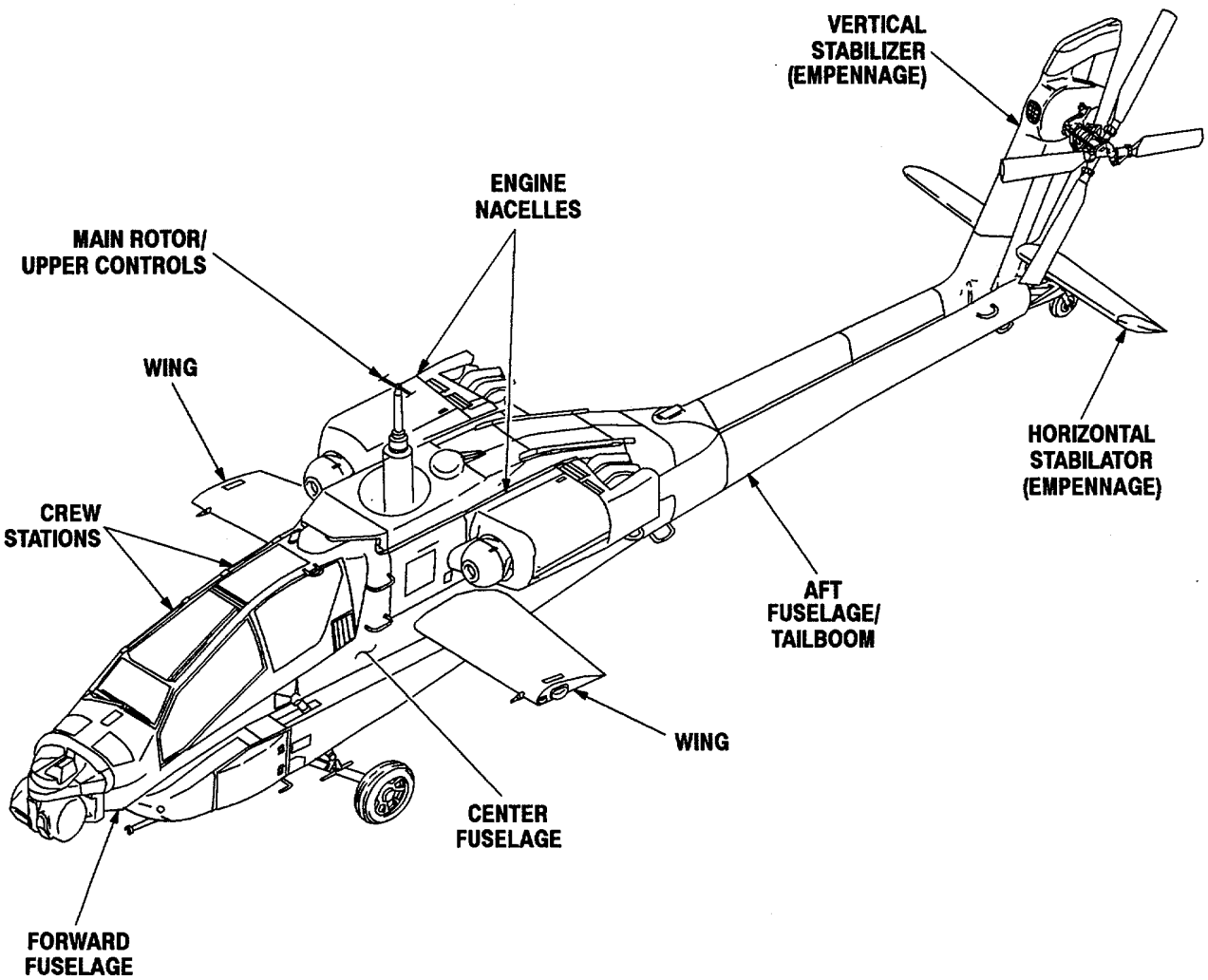

M102-070

Figure 2-1. AH-64A Airframe from Above

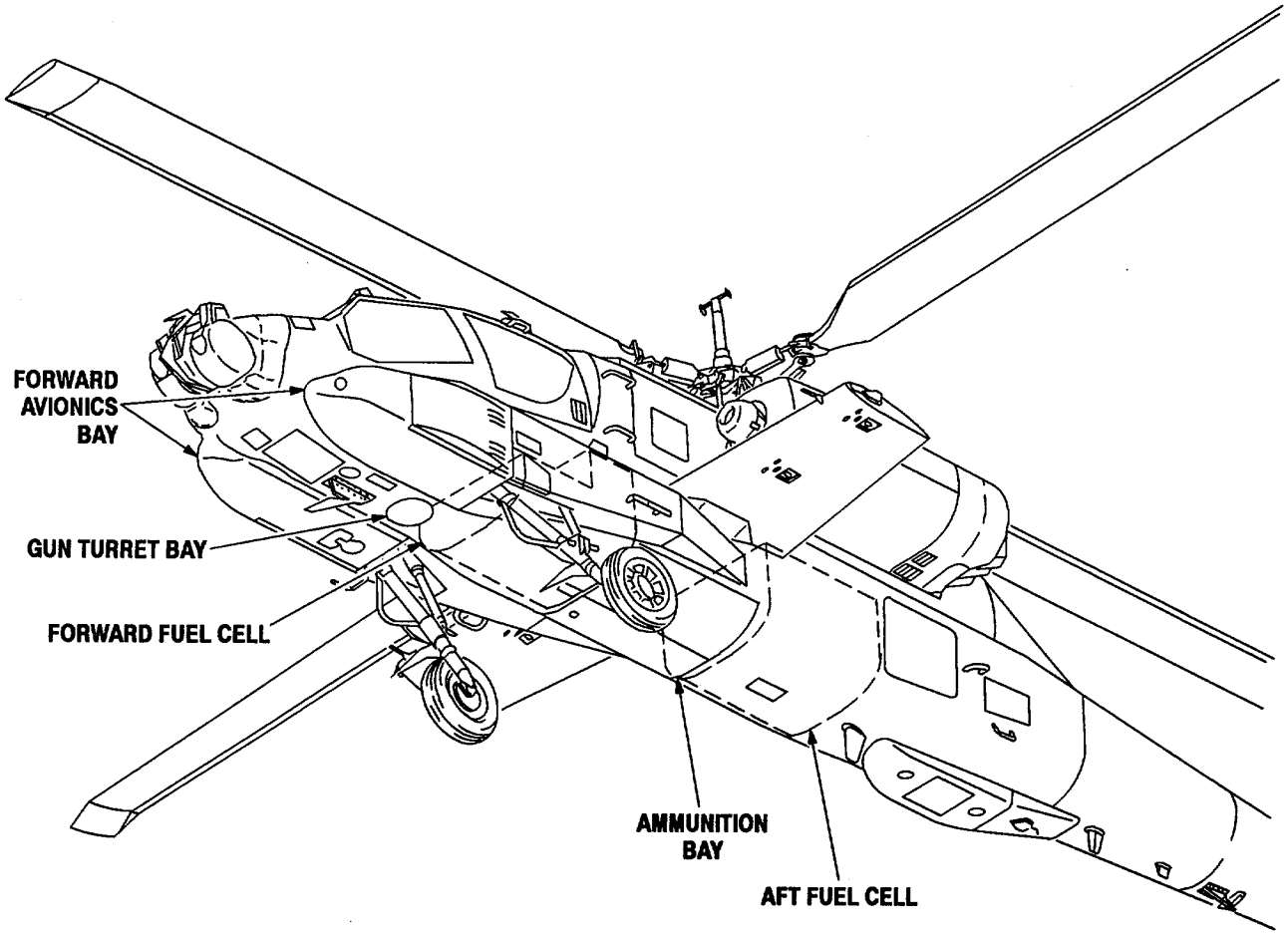

M102-071

Figure 2-2. AH-64A Airframe from Below

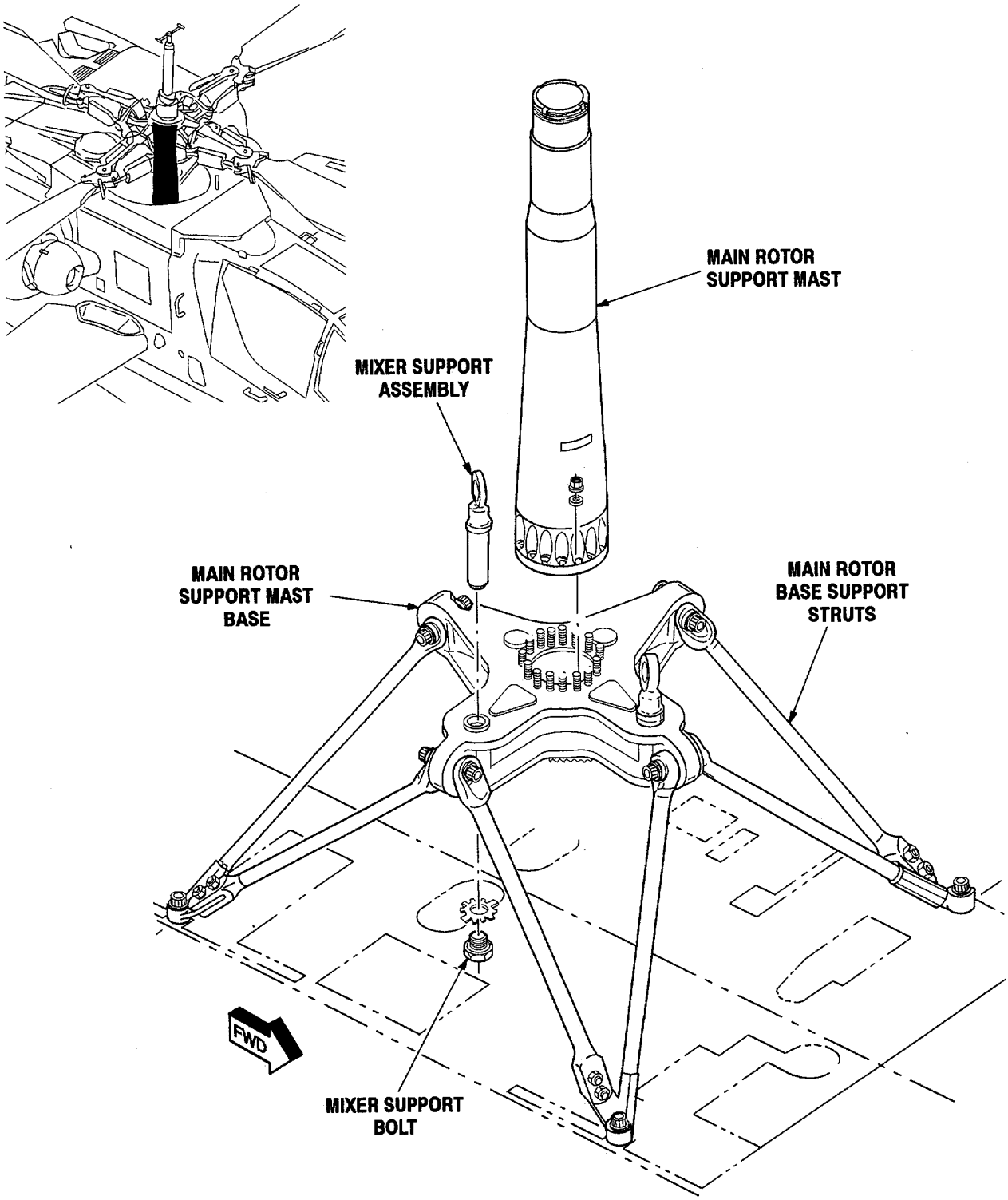

M102-157

Figure 2-3. Rotor Support Component Location

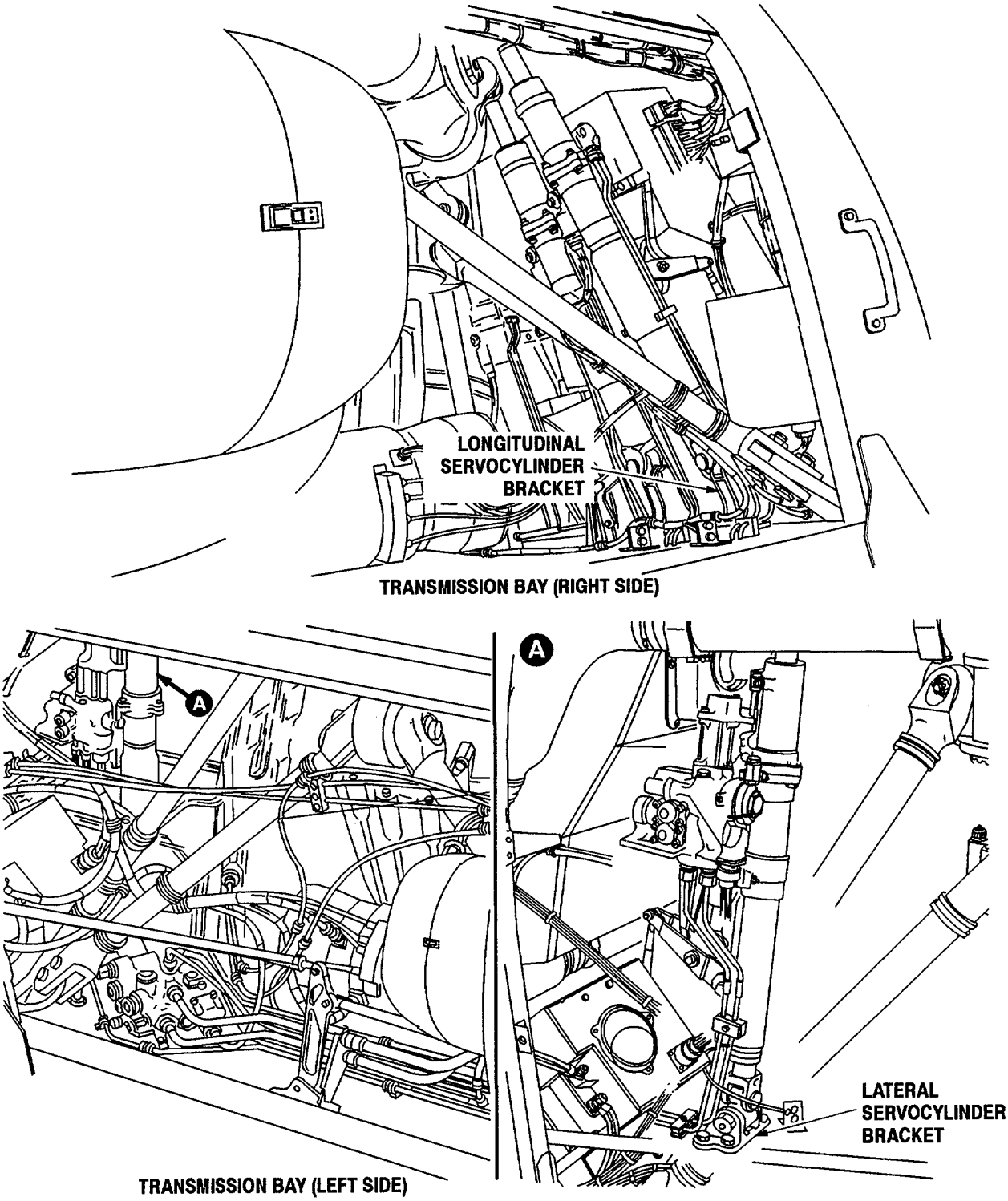

M102-158

Figure 2-4. Longitudinal and Lateral Servocylinder Bracket Location

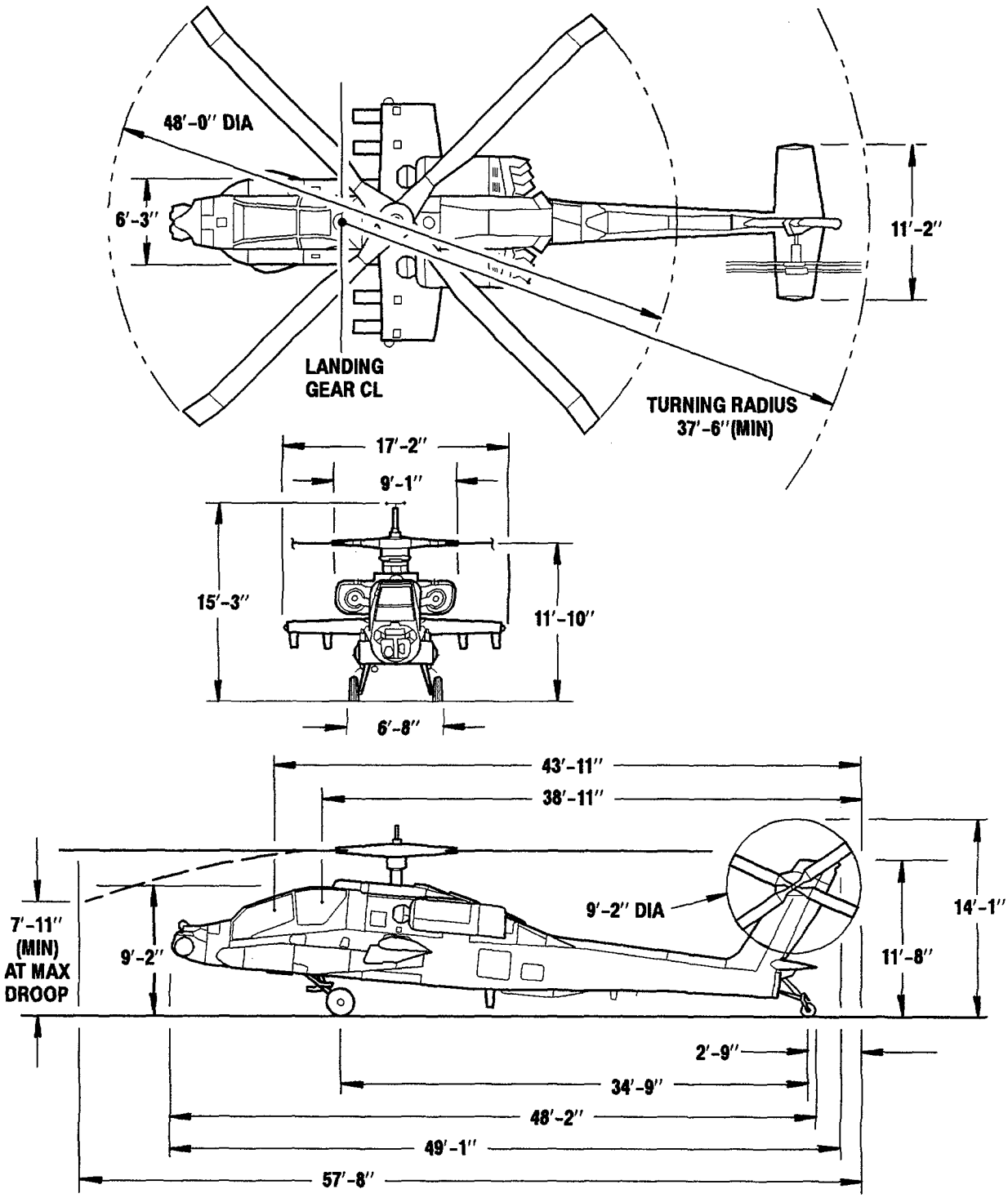

M102-068

Figure 2-5. AH-64A Airframe Dimensions

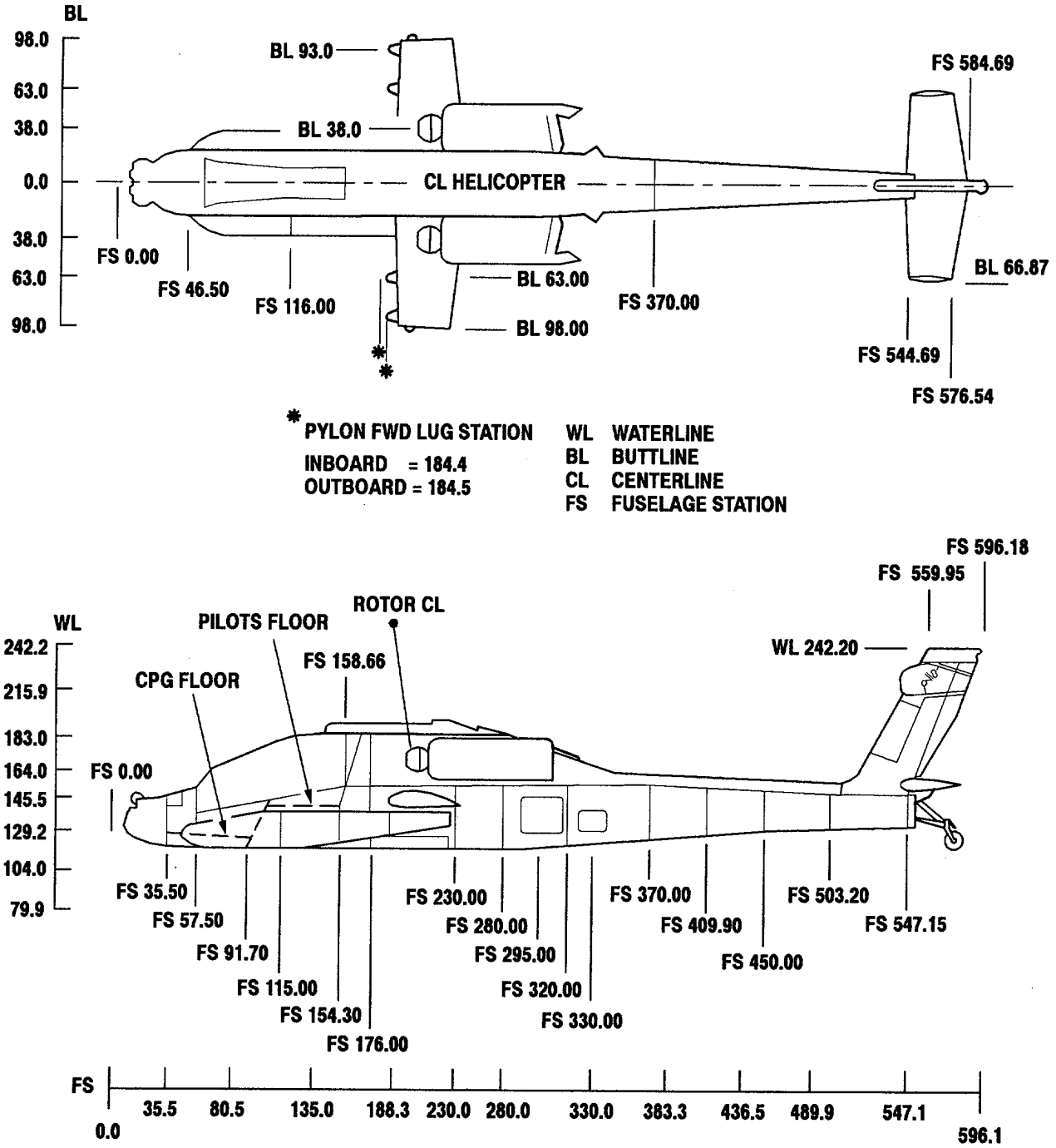

M102-069

Figure 2-6. AH-64A Airframe Station Location

SECTION II. AIRFRAME BATTLE DAMAGE INSPECTION

2-7. BATTLE DAMAGE INSPECTION.

Battle damage assessment requires a thorough and careful inspection. Slight damage, if left undetected, may become more severe under continued stress and lead to a serious weakening of the overall structure. It is important that all structures in the damaged area be made accessible to inspection. The inspection must be conducted with care and diligence. All detected structural damage must be labeled and recorded on the Aircraft Technical Inspection Worksheet (DA Form 2408-13-3) in accordance with DA PAM 738-751.

2-8. CLEANING.

Proper inspection of airframe battle damage may require locating small flaws such as fine cracks and imbedded particles. To find small defects, the structure has to be free of dirt, lubricants, and debris that might conceal them. Before starting the inspection, thoroughly clean all structures in the damaged area with solvent. Use brushes and cotton swabs to remove dirt and film from small crevices where damage may be present.

2-9. ACCESS TO DAMAGED STRUCTURE.

It is important to locate all damage to airframe structure. Remove all access panels, covers, and fairings in the damaged area. Remove aircraft components as required to thoroughly inspect the structure. Use the location of entrance and exit wounds and the estimates of projectile paths (Paragraphs 1-25 and 1-26) to determine the areas where access to interior inspection will be needed. If an area of structure suspected of being damaged cannot be reached by other means, cut small inspection holes in the exterior skin. Then inspect internal members with an inspection light and mirror.

NOTE

- Inspection holes cut in the exterior skin, if left unrepaired, will have to be treated as damaged structure in the damage evaluation.

- Always allow for access to the areas immediately next to the area where damage is known to have occurred. This will ensure that damage caused by stray particles and dislodged sections of material can be found.

2-10. LOCATING DAMAGE.

All damage to the airframe structure must be located. Small damage can be critical to some components. Use the data on entrance and exit wounds and the estimated projectile paths (Paragraphs 1-25 and 1-26) to identify areas where damage might be present.

2-10.1. Damage Caused by Solid Penetrators. It may sometimes be apparent that a solid projectile has made the same entrance and exit wounds. In such cases you may assume that the damage lies close to the path defined by the entrance and exit wounds. Carefully examine all structure and components along this path for damage. Evidence may show that a structure or component has been struck or penetrated by a piece of shrapnel, with a resulting loss of material. Look for the dislodged material. Also look for any damage it may have done to other structures and components. Such damage may lie along or at an angle to the path of the projectile. The shrapnel may penetrate or lodge itself in other structures. Conduct the same type of examination if the original projectile broke apart and pieces were deflected into different directions. Examination of the entrance and exit wounds may indicate that the original projectile remained intact but ricocheted. Look for spalls and gouges caused by the ricochet. Continue the internal inspection along the path of the ricochet.

2-10.2. Damage Caused by HEI Projectiles. After HEI strikes, a thorough investigation for internal damage must be conducted. Because of the many types of damage associated with the HEI threat, the resulting damage can be widespread and highly variable. Fragments from the exploding projectile will travel in an expanding cone within the structure. When they encounter a structure or a component, they will either penetrate and continue traveling, ricochet into another direction, or become imbedded. Fragment damage may therefore occur over a wide region within and outside of the assumed fragment cone. Some of the fragments are very small and when imbedded in a structure, can only be detected by very close inspection. When inspecting for internal damage caused by HEI strikes, it will also be necessary to look for the effects of explosive blast and overpressure. Thin webs or skins subjected to blast pressures will usually have obvious damage. The damage will be deformed, ruptured, and/ or torn or blown away metal. Damage to nearby structural members, such as frames and beams will be less

obvious. The damage will usually result in buckling and misalignment. All structures near the blast should be carefully examined for this type of damage.

2-11. INSPECTING FOR CRACKS.

2-11.1. Impact Cracks. Cracks produced by projectile impact or overstress can damage a structural component. Cracks may be caused by projectile impact or penetration. They may also be caused as a direct result of blast pressure. Battle damaged structures placing more severe loads on surviving members may also produce cracks. When cracks are a result of these last two factors, they may occur in regions away from the site of the primary damage.

2-11.2. Projectile Damage Site Cracks. Cracks will primarily be found at the site of the projectile damage. Holes, spalls, and gouges caused by ricochets and imbedded particles will often have cracks associated with them. These may be large and visible or hairline and microscopic. Small cracks may be as critical as large cracks when located at the edge of a hole, because they may grow rapidly under continued loading.

2-11.3. Airframe Structure Cracks. It is important to locate all cracks in airframe structure. At each damage site, carefully inspect the area for cracks. Use inspection aids such as magnifying glasses or dye penetrant to locate small cracks. Cracks may not go all the way through the material, so it is necessary to inspect both sides. When a structure shows signs of overstress, it is vital to inspect for cracks around fasteners.

2-11.4. HEI Explosion Cracks. For aircraft damaged by HEI strikes, inspect all of the structure in the area of the explosion. Damage may show indications of overstress and cracks. Aircraft may have been flown with major structural battle damage or failure. It is vital to inspect for cracks in all areas to which additional load may have been distributed.

2-12. INSPECTING FOR STRUCTURAL CHANGES.

2-12.1. Buckling, Crippling, and Misalignment. Structural changes in the form of buckling, crippling, and misalignment can happen as a result of blast pressures. These could be associated with a HEI attack or as a result of the overstress placed on a member. Such members may have to carry the load of another member which has been broken or crippled by projectile damage. This type of damage can be critical to the structural performance of a member. This is especially true when the member has to support pressure loads. A stringer that has been crippled can continue to support stretching loads, for example, but is completely ineffective in compressive loads.

2-12.2. HEI Damage. It is important to inspect for structural changes when the aircraft has taken a HEI hit. Also inspect for structural changes when the aircraft has been flown with primary structure damaged or missing. Inspect both the projectile damaged structure and the surrounding undamaged areas for evidence of buckling, crippling, and misalignment. This type of damage is usually revealed by kinks or wrinkles in the webs and caps on internal members. It is also revealed by wrinkling and "oil canning" of skin panels. Sheared, pulled-through, and missing fasteners are also indications of structural changes.

2-12.3. Marking. When structural change symptoms are evident, clearly mark the location and examine the component for alignment and signs of twisting or bowing. Use a straight edge to inspect these conditions. If the inspection indicates that a member has been overstressed and structurally changed, record that information on DA Form 2408-13-3. Clearly label the member following the instructions given in Paragraph 2-17.

2-13. INSPECTING FOR IMBEDDED PROJECTILES AND FRAGMENTS.

2-13.1. Solid Projectiles. Solid projectiles lose energy as they penetrate airframe structure and components. They may also break into pieces, producing fragments with lower kinetic energy. A spray composed of numerous fragments, some of them the size of small pellets, is associated with the HEI threat.

2-13.2. Imbedded Projectiles. As the energy of a projectile lessons, the projectile will imbed itself. Large machined fittings are able to stop higher velocity projectiles. Lighter structures can stop smaller, slow moving particles.

2-13.3. Imbedded Projectile Effect. An imbedded projectile or fragment can be as severe as a hole or crack of the same size. The imbedded object creates an interruption in the structural section. Since it is difficult to detect, it must be assumed that the projectile has nearly gone through the structure.

2-13.4. Imbedded Projectile Inspection. Carefully inspect for imbedded projectiles and fragments when either of the following occur:

a. The aircraft has suffered HEI damage.

b. Inspection of the aircraft indicates that a solid projectile has not exited the aircraft, has broken apart, or has created shrapnel by striking internal components.

2-13.5. Projectile Path Evaluation. The evaluation of projectile paths will aid in identifying internal structures that may contain imbedded projectiles or fragments. Inspect all structures in the region using a bright light and a magnifying glass. Clearly mark imbedded objects and record them on DA Form 2408-13-3.

2-14. INSPECTING FOR FIRE DAMAGE.

2-14.1. API and HEI Fire Damage. The API and HEI threats include the possibility of fire damage. These threats have a fire-starting capability if flammable materials are present. Fire damage to the integrity of an aircraft can be detected, in some instances, by the color change in the organic coating used in specific areas. Most of the internal structure is coated with epoxy polyamide primer MIL-P-23377. Areas exposed to exterior environments, such as the landing gear, gun, ammo, and electronic compartments, or compartments having ram air cooling, are coated with polyurethane enamel MIL-C-83286 over the primerMIL-P-23377. Short duration fires of 30 seconds or less will discolor or blister these coatings. The effect of a short duration fire is probably insignificant on the structural metal; however, prolonged fire duration could damage the structural metal, especially aluminum.

2-14.2. Discoloration. Color changes in the coating(s) should be compared to adjacent or nearby structures where the surfaces were not exposed to fire. Most discoloration indicates surface oxidation. The degree of oxidation will give the appearance of a light brown to black discoloration to the organic primer and enamel coating. Aluminum alloys are affected by prolonged temperatures above 300° F (149° C). Any discolorations an indication that temperatures have exceeded 300°F (149° C) and a decision must be made at the recovery site whether the aircraft is flyable.

2-14.3. Subsystem Fire Damage. Inspect for damage to functioning parts of the various subsystems such as actuators, valves, bellcranks, cables, control rods, hydraulic lines, electrical harnesses, and fuel lines. Inspect for deformations of the type that cause misalignments, shifting of a part relative to its support, and seizing or jamming. Inspect for outright rupture, partial severing, perforation, or severe distortion. If heat damage is indicated, record the information on DA Form 2408-13-3 and clearly label the member.

2-15. DETECTING SUBSTRUCTURAL DAMAGE IN ADJOINING AREAS.

2-15.1. Secondary Damage. When the airframe has been subjected to severe overstress, members undamaged by projectiles may bend or buckle. This might be caused by explosive blasts or maneuvering loads imposed on damaged structures. Sometimes this secondary damage will occur in a region away from the primary area of damage. The airframe near the projectile damage should be inspected for evidence of secondary damage.

2-15.2. Secondary Damage Indicators. Inspect the skin for creases, wrinkles, and dents. Inspect fasteners for chipped or flaked paint, looseness, and serviceability. These conditions are signs of damage to substructure. Open or remove access panels and doors and inspect the interior members for cracks and structural changes. Clearly label and record all damage.

2-16. INSPECTING FOR BROKEN AND MISSING FASTENERS.

2-16.1. Fastener Damage or Loss. Some fasteners join parts together in an assembly and some join one structural member to another. Shear, pull-through, tear-out, elongated fastener holes, and the damage or loss of fasteners can severely weaken the soundness of a structure.

2-16.2. Riveted and Bolted Joints. Inspect all riveted and bolted joints near the battle damage. Look for sheared, pulled-through, and torn-out fasteners and elongated fastener holes. Carefully inspect members showing signs of structural change and for fasteners with chipped or cracked paint. Where possible, inspect fasteners from both sides. Clearly label and record all damaged fasteners.

2-17. LABELING AND RECORDING DAMAGE.

2-17.1. Recording Damage. Accurate recording of damage is an important part of battle damage assessment. Record individual areas of damage to a structural element separately on DA Form 2408-13-3 in accordance with DA PAM 738-751. If a structural member is massively damaged or severed, recording individual areas of damage is unnecessary. Complete the form and record all detected damage. Use the following procedure:

1. Record aircraft section and number of zone containing damaged element. Enter proper status symbol for each defect.

2. Record name of damaged element, such as frame, stringer, or skin panel.

3. Describe location of damaged element within zone, such as station, waterline, butt line, or panel location.

4. Describe damage to element using terms such as hole, crack, or buckle. Use names that will help in comparing recorded damage with damage limits.

5. Continue damage recording for:

   a. Other damage to the same element.

   b. Other damaged elements in the same zone.

   c. Other damaged zones in that section of air-frame.

   d. Other damaged sections of airframe as required.

6 After the damage assessment is completed, file the damage report in the aircraft logbook and make entries as required (Paragraph 1-28).

2-17.2. Preparing Damage Diagrams. Use diagrams to show the location and extent of the damage. Figure 2-7 shows an example of a damage diagram. The layout of the structure in the damaged area can be drawn by hand. Sketches of the airframe can be prepared ahead of time and kept in a file with the damage report forms. Accurately locating damage on a diagram will greatly help the damage assessment procedure.

2-17.3. Labeling Damage. Label the damaged structure using grease pencil or paint. Use the following labeling scheme (Figure 2-8):

NOTE

Use of grease pencil in areas exposed to high temperatures will cause the markings to fade or become illegible.

1. Use a bright color to outline each area of damage as it is located and recorded on DA Form 2408-13-3. Attempt to make the outline visible from all angles.

2. Draw arrows on inside skin panels, webs, and bulk-heads to point toward areas of damage that are hidden.

3. After completing damage evaluation, draw or paint a red “X" next to any damage exceeding published failure standards (repair mandatory).

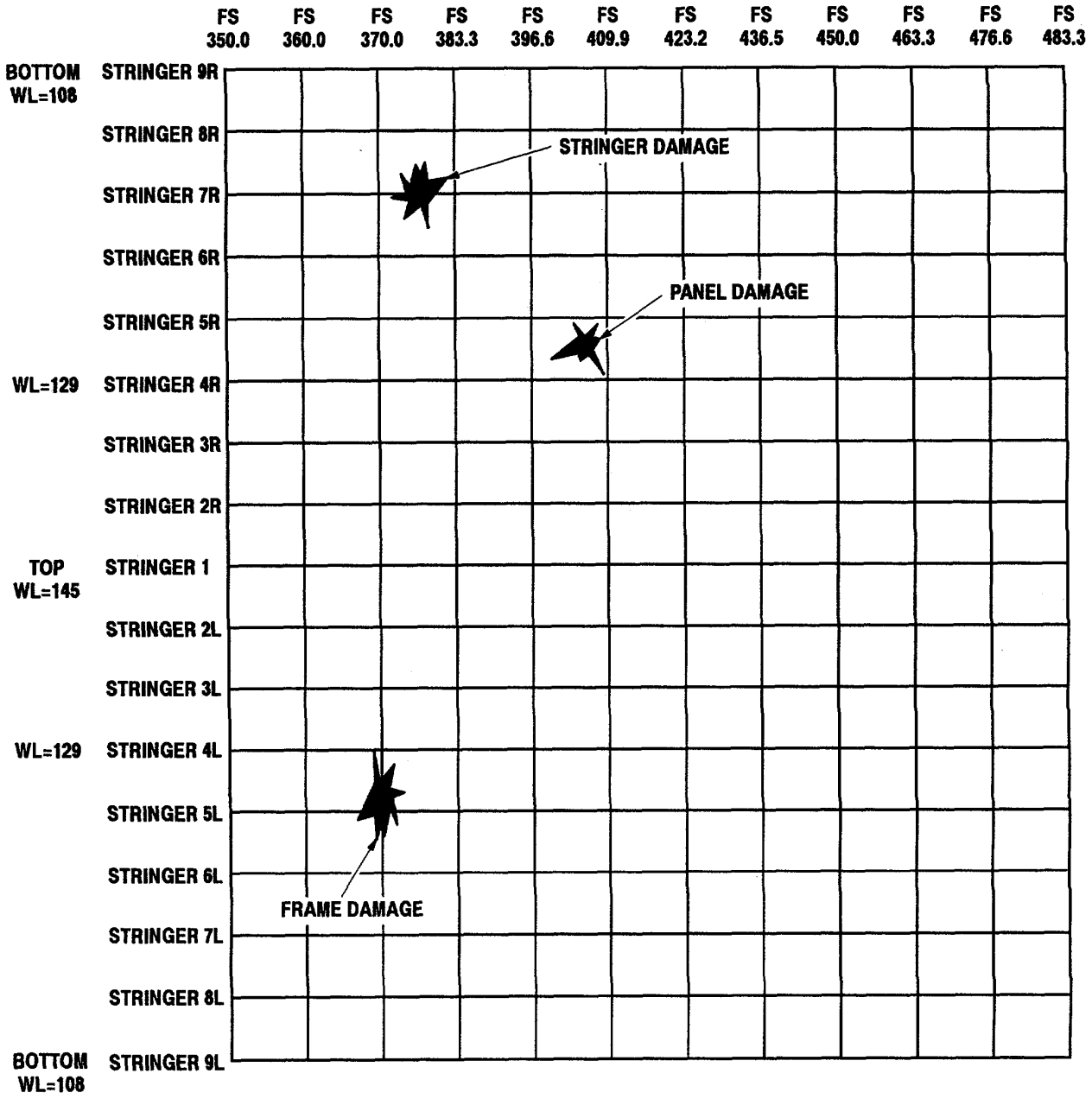

M102-012

Figure 2-7. Use of Damage Diagrams

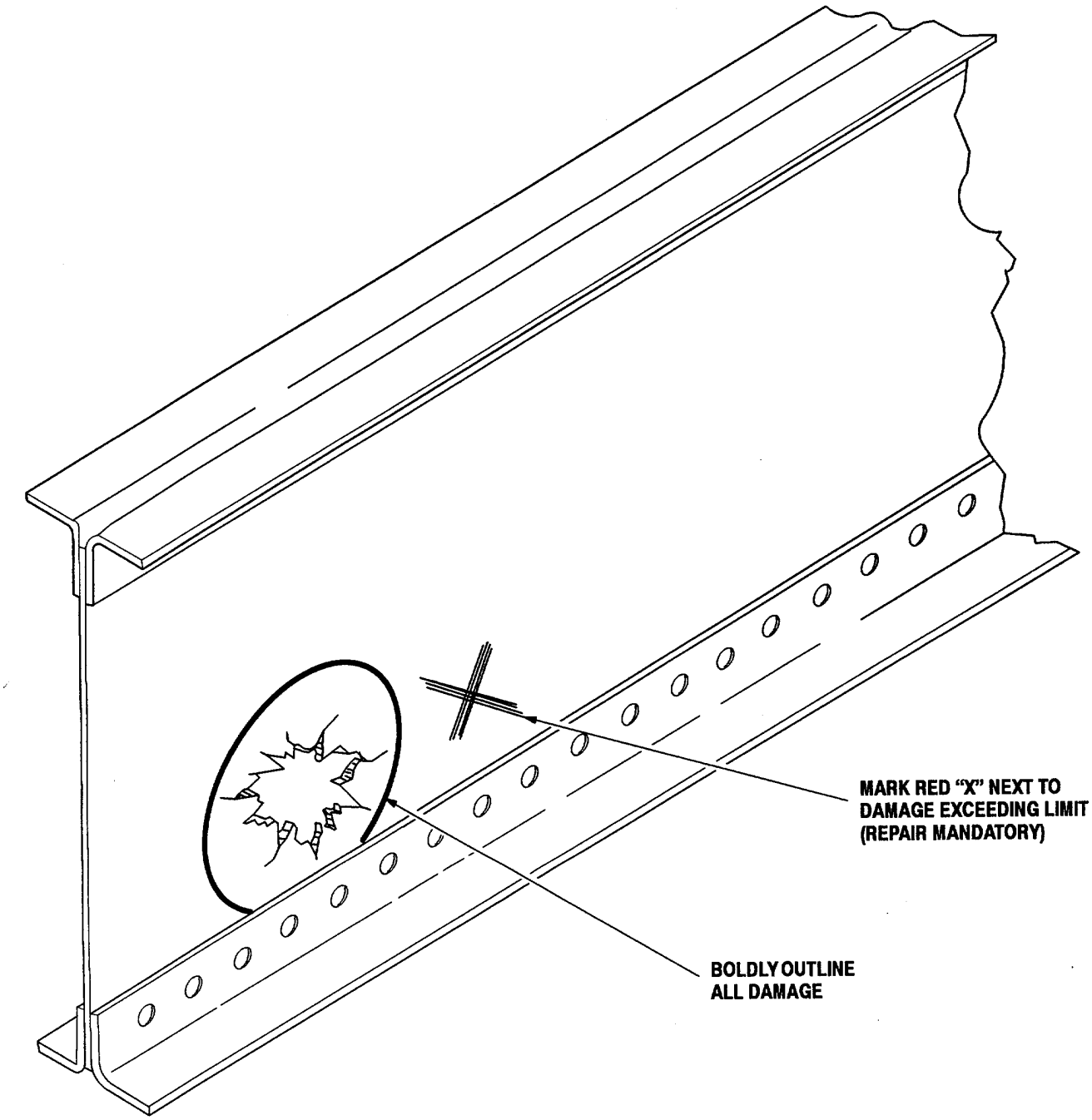

Figure 2-8. Labeling Damage

M102-013

SECTION III. AIRFRAME BATTLE DAMAGE EVALUATION

2-18. DAMAGE EVALUATION.

Damage evaluation is used to determine if battle damaged structural members are serviceable or failed. A member is classified as failed when the damage exceeds a specified limit. The limits are based on preserving enough strength in the structure to support all loads that might be sustained by the aircraft for:

a. Type I Deferment - 100 hours of normal flight operation
b. Type II Deferment - one-time recovery flight

Some components of the fuselage are highly loaded and are critical to safe operation of the aircraft. Damage to some areas of these components is nondeferrable and must be repaired prior to any further flight. Tables 1-3 through 1-10 identify these critical components.

2-19. DAMAGE MEASUREMENT.

2-19.1. Definitions. The following terms and acronyms will be used for the damage evaluation process:

a. Cap - Flat strip attached along top or bottom edge of beam, frame, or spar (Figure 2-11).
b. Web - Membrane connecting upper and lower caps of a beam, frame, or spar (Figure 2-11).
c. Stiffener - Structural element that adds strength to skin or web (Figure 2-11).
d. CL - Cap Damage Length
e. WL - Web Damage Length
f. SL - Stiffener Damage Length
g. DL - Damage Length
h. L - Section Length
i. CD - Cap Damage Depth
j. SD - Stiffener Damage Depth
k. D - Damage Distance Between Sites (Spacing)
l. TDA - Total Damage Area

2-19.2. Damage Evaluation Comparison. Damage evaluation involves the comparison of measured damage to established damage limits (Section V). Except in cases where the structural member is massively damaged and obviously failed, damage to each member must be measured. Damage limits for primary structural members are given in terms of an allowable damage size and an allowable damage spacing, both measured in inches. Damage limits for secondary structures are given in terms of an allowable net loss of section, measured as a fraction of the element crosssection.

NOTE

It is necessary to have a complete understanding of how to measure and calculate damage size before performing damage evaluation. Paragraph 2-20, Damage Evaluation Process, covers damage measurement procedures for specific types of structural members.

2-19.3. Measuring Damage Size. Most of the damage limits for primary structure are given in terms of length, depth, and distance between damage sites. Each of these dimensions must be measured and recorded. Use the following procedures when measuring damage:

1. When damage is to be smoothed, measure damage dimensions after smoothing.
2. Use steel rule graduated in tenths of an inch and measure each damage dimension to next higher tenth of an inch.
3. Measure each damage dimension in accordance with damage evaluation procedure for that type of member.
4. Include all radiated cracks in measured dimension.
5. Include size of hole when measuring damage that extends into fastener hole or lightening hole.

2-19.4. Measuring the Distance Between Damage Sites. Damage standards for most structures have a minimum required spacing between individual areas of damage. The spacing requirement for adjacent damage is expressed as a multiple of the largest dimension (CDor CL) of the area of greatest damage (CD x CL). For

example, 5x or 10x, means a factor of 5 times or 10 times the largest dimension of the greatest damage area. The following rules apply to the measurement of damage spacing:

a. The spacing factor applies to the damage actually measured, not to the maximum damage limit for the structure.

b. The greatest damage area is the damage site with the largest damage area (CL x CD).

c. The spacing factor applies to the largest dimension of the largest damage area.

d. The spacing requirement applies only if the length dimensions of two or more damages, when added together, exceed the single damage limit.

e. When two damages are involved that exceed the single damage limit, the spacing factor may not be waived. When three or more damages are involved that exceed the single damage limit, the spacing factor may be waived only once

NOTE

Damage evaluation standards for individual types of structure may place a limit on the number of damages a member is permitted to have.

f. Example #1: Refer to the damage condition shown in Figure 2-9, sheet 1 of 2, view A. Both areas of damage to the cap are within the maximum allowable damage length (CL) and the maximum allowable damage depth. However, the dimensions of both damages when added together, exceed the single damage maximum limit (CL = 1.0 inch). The minimum required damage spacing in this case is 5 times the largest dimension of the largest of the two damages, which would be 5 x 0.8 = 4.0 inches. If the distance between these two damages were less than 4.0 inches, the damage would exceed the damage limit and the member would be classified as failed.

g. Example #2: Refer to the damage condition shown in Figure 2-9, sheet 1 of 2, view B. The maximum dimension of the two damages when added together do not exceed the damage limit (CL = 1.0 inch). The minimum spacing requirement therefore does not apply and the damages may be any distance apart.

h. Example #3: Refer to the damage condition shown in Figure 2-9, sheet 1 of 2, view C. The total dimension of the three damages exceed the single damage limit (CL = 1.0 inch). The minimum spacing requirement for either damage a and b or b and c can be waived. For example, the minimum spacing requirement must be applied for damages b and c when a and b are waived. In this case, damages b and c would have to be separated by 5 x 0.6 = 3.0 inches in order to not exceed the damage limit. If the total dimension of the three damages did not exceed the single damage limit, the minimum spacing requirement would not apply.

2-19.5. Measuring Section Dimensions and Calculating Section Losses. Some damage limits given in this manual are expressed as a net loss of structural section. The section loss is the length of the damage in cross section divided by the length of the element (component or part) in cross section. Where damage limits are expressed as a net section loss, measure these dimensions and calculate the loss. This procedure applies only when the damage limit is given as a maximum allowable loss of structural section. The structural section is the endwise view of the member (Figure 2-9, sheet 2 of 2). Observe the following procedures when measuring section dimensions:

1. Find an area of member where damage is accessible on all sides.
2. Use steel rule to measure length of member and length of damage in section. This may require adding together several separate lengths (Figure 2-9, sheet 2 of 2).
3. Divide damage length by section length to calculate fractional section loss.
4. For members which are tapered or otherwise vary in size along their length, measurements must be made at or very near point of damage. Example: See Figure 2-9, sheet 2 of 2.

Section Length = L1+L2+L3	L1 =	0.8 IN
	L2 =	1.5 IN
	L3 =	0.8 IN
		3.1 IN
Damage Length = DL1 + DL2	DL1 =	0.4 IN
	DL2 =	0.3 IN
		0.7 IN
Section Loss = Damage Length- Section Length	0.7 IN + 3.1 IN = 22 %	

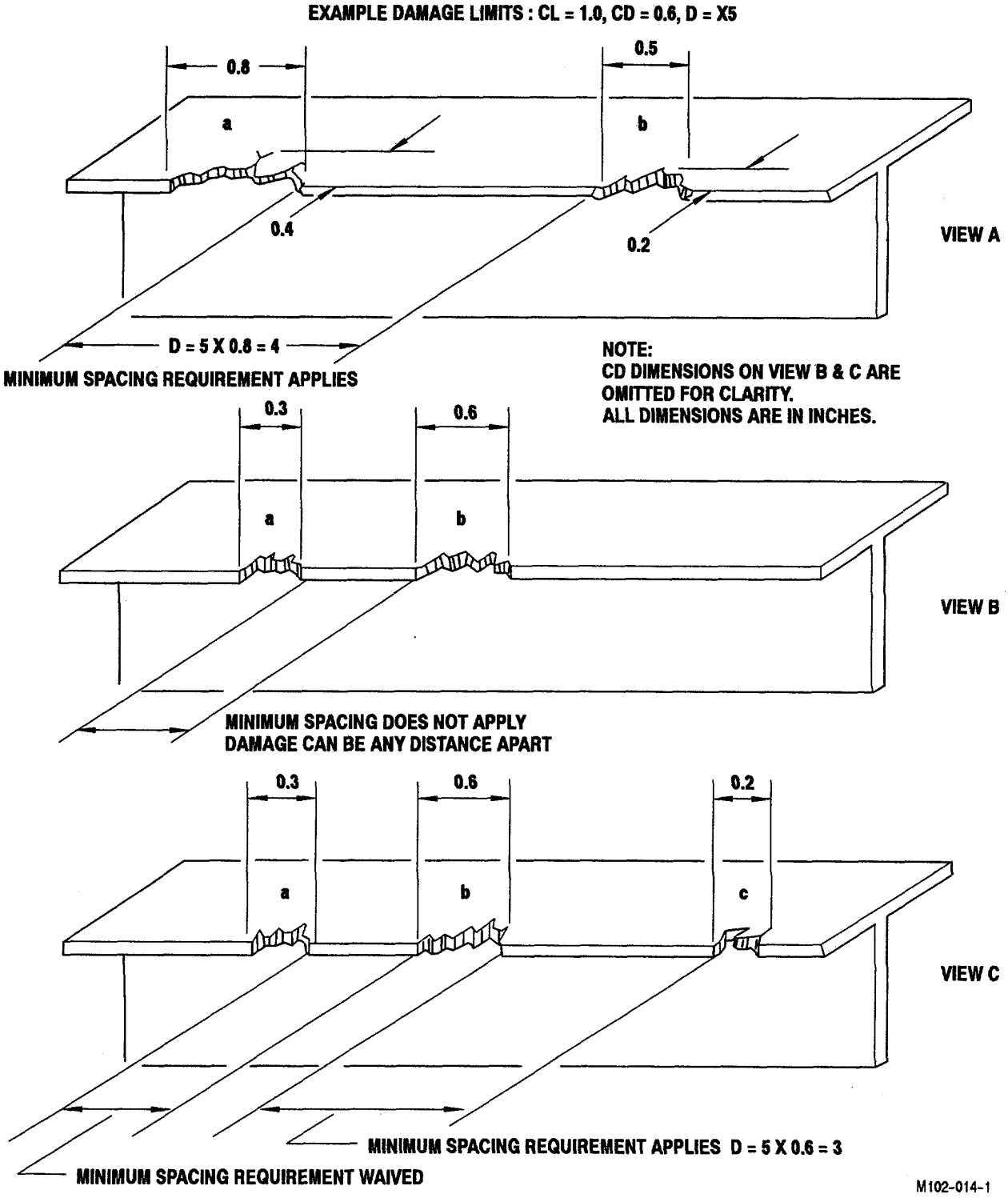

Figure 2-9. Measuring Distance Between Damage Sites and Section Losses (Sheet 1 of 2)

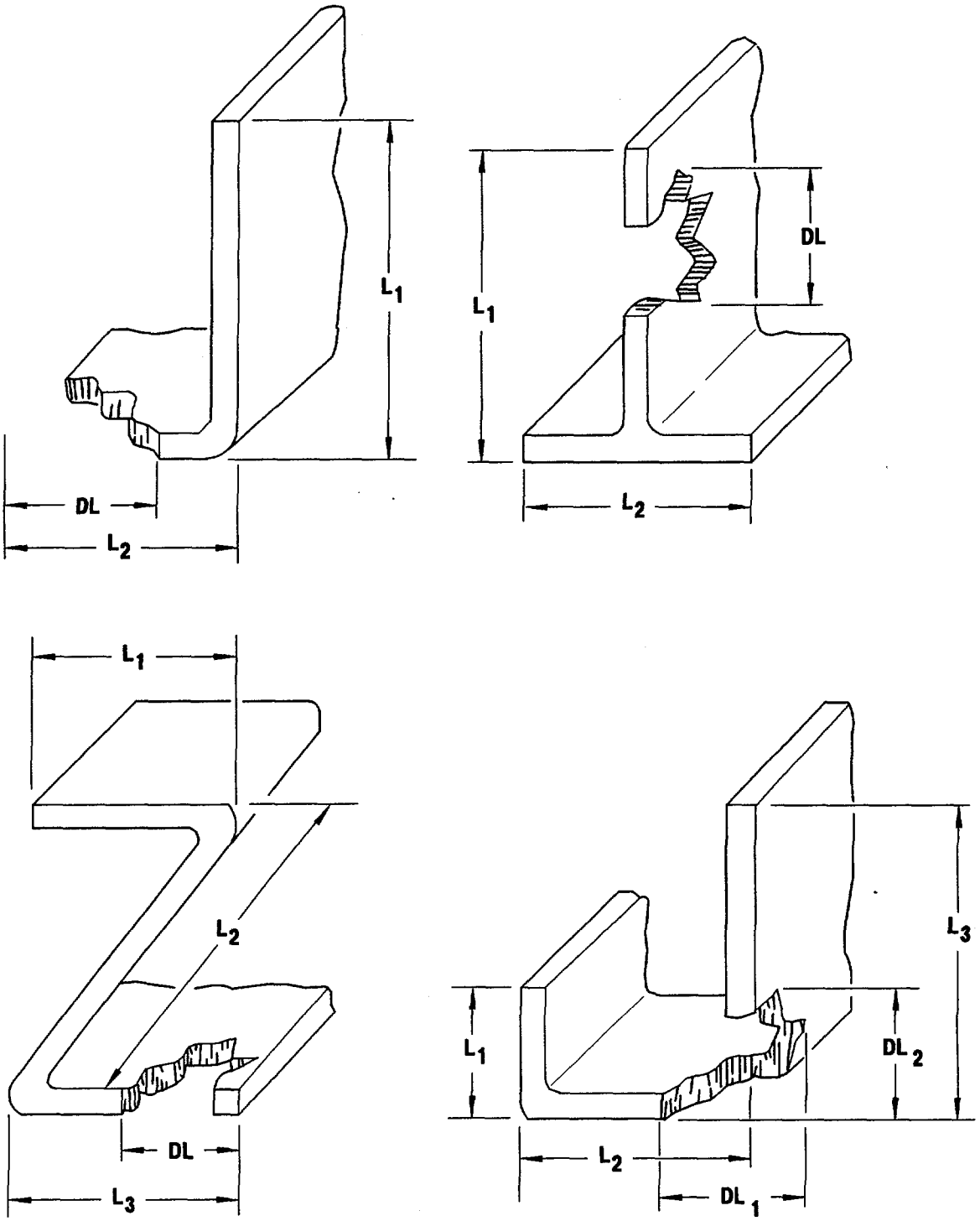

Figure 2-9. Measuring Distance Between Damage Sites and Section Losses (Sheet 2 of 2)

2-19.6. Measuring Area Losses. Some of the damage limits in this manual are expressed as a net percentage loss of area. The loss of structural area caused by a hole, crack, or tear is determined by the length times the width. The area loss is calculated by measuring the area of the individual damages such as holes and tears, adding them to obtain a total damage area and dividing by the surface area of the panel or structure member (Figure 2-10). For example:

Total Damage
Area (TDA) = (DL1 x DW1) + (DL2 x DW2) +...

Area Loss (%) = TDA -+ Total Surface Area of
Panel or Structural Member

Because of differences in the surface area of structures and in areas of damage, it will be necessary to estimate measurements in many cases. Estimated measurements are acceptable.

NOTE

Do not proceed with damage evaluation unless an inspection has been completed and DA Form 2408-13-3 has been completed.

2-20. DAMAGE EVALUATION PROCESS.

Damage evaluation begins with identification of the damaged structural members and a description of the damage. This information is obtained from the damage inspection. Read Paragraph 2-19, Damage Measurement, before starting structure damage evaluation.

2-20.1. Evaluation Procedure. Damage evaluation compares observed damage with damage limits to determine if damaged members are serviceable or failed. Evaluate damage using the following procedure:

1. Conduct evaluation at aircraft. Do not rely on memory, pencilled notes, or DA Form 2408-13-3 alone.

2. Evaluate more severely damaged members first and then evaluate lesser damaged members.

3. Identify type of structural member that has been damaged. Compare damaged component to components listed in Paragraph 2-21. If the component being evaluated is listed, then component must be repaired prior to any additional flights. If component is not listed in Paragraph 2-21, proceed with damage evaluation.

4. Provided there are no damaged members that are nondeferrable, continue the evaluation by locating the paragraphs of this chapter covering the type of member(s) that is (are) damaged.

5. Refer to specific paragraph covering gross damage evaluation for damaged structure. Compare damaged structure with listed damage conditions. Classify member as failed if any of those conditions are present.

6. If damage does not exceed gross damage standards, refer to paragraph covering detailed damage evaluation. Measure damage as directed. Then compare measured damage with damage limit tables in accordance with Paragraph 2-38.5. If damage limits are exceeded, classify member as failed.

7. If member is classified as failed, record and label damage on DA Form 2408-13-3.

8. Continue evaluating, recording, and labeling damage to other structural members.

9. If one or more members have been classified as failed, determine if repair of damage(s) is deferrable using deferment tables in accordance with Paragraph 2-38.5.

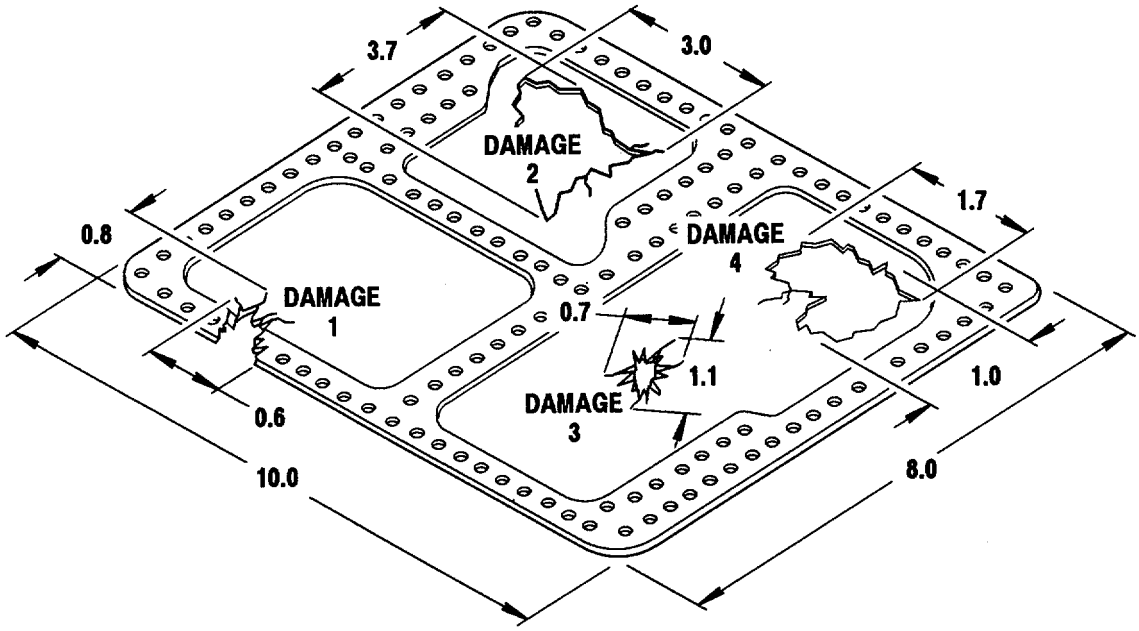

TOTAL DAMAGE AREA (TDA)= (DLx DL1) + (DL2x DL2)+... NOTE: ALL DIMENSIONS ARE IN INCHES
AREA LOSS = TDA + TOTAL SURFACE AREA
TDA= (0.8 x 0.6) + (3.7 x 3.0) + (1.1 x 0.7) + (1.7 x 1.0) = 14.05
AREA LOSS =14.05 + 80 = 17.6%

Figure 2-10. Measuring Area Losses

2-20.2. Battle Damage Evaluation.

The remainder of this section covers evaluation of battle damage to the general types of structural members found in the AH-64A airframe. If a damaged component is not covered in this manual and the damage appears to exceed authorized limits, classify the component as failed. The following battle damage evaluations are covered:

Evaluation Procedure	Para
Evaluation of Damage to Built-up Sheet Metal Beams, Frames, Spars, and Bulkheads	2-22
Evaluation of Damage to Machined Frames and Beams	2-23
Evaluation of Damage to Machined Fittings	2-24
Evaluation of Damage to Longerons	2-25
Evaluation of Damage to Splices, Straps, Doublers, and Gussets (Joints)	2-26
Evaluation of Damage to Stringers	2-27
Evaluation of Damage to Skin Panels	2-28
Evaluation of Combined Skin Panel/Stringer/Frame Damage	2-29
Evaluation of Damage to Honeycomb-sandwich Panels	2-30
Evaluation of Damage to Sheet Metal Floor and Decks	2-31
Evaluation of Damage to Sheet Metal Ribs, Formers, Intercostals, and Channels	2-32
Evaluation of Damage to Canopy	2-33
Evaluation of Damage to Doors and Door Jambs	2-34
Evaluation of Damage to Fairings and Nacelles	2-35
Evaluation of Damage to Firewalls	2-36
Evaluating the Effect of Structural Damage on other Aircraft Systems	2-37

2-21. CRITICAL AIRFRAME AREAS.

Damage to some areas of the airframe is critical and must be repaired prior to any additional flights. These areas are highly loaded and are critical to the safe operation of the aircraft. Tables 1-3 through 1-10 identify these areas.

2-22. EVALUATION OF DAMAGE TO BUILT-UP SHEET METAL BEAMS, FRAMES, SPARS, AND BULKHEADS.

2-22.1. Description. Built-up sheet metal beams, frames, spars, and bulkheads are found in the cockpit, fuselage, and tailboom sections. Made primarily of 7075-T6 and 2024-T42 Aluminum Alloy, these components are an assembly of sheet metal parts riveted together. They form I-section, T-section, J-section, or C-section members. The main structural elements of each component are a web and one or more caps or flanges. In the case of bulkheads, the component forms a vertical wall with a fairly deep web section. Stiffeners are riveted to the webs in some cases. Lightening holes or stiffening beads are placed in the webs of some designs.

Beams are normally installed lengthwise (fore and aft) in the airframe. They are subjected to high axial loads (tension or compression) in the caps. In the webs they introduce high in-plane shear loads.

Frames are mounted in the airframe at right angles to the aircraft centerline. Their primary function is to support and stabilize the fore and aft framing members such as stringers and longerons. Frames are subjected to high in-plane bending loads. These loads produce high axial loads (tension or compression) in the frame caps. In the webs they produce high in-plane shear loads. Battle damage of frames can affect the performance of other structural members. See Paragraph 2-27, Evaluation of Damage to Stringers, for additional evaluation standards.

Bulkheads are mounted in the airframe at right angles to the aircraft centerline. Depending on their function, they may be subjected to high in-plane shear loads and/or high out-of-plane pressure loads.

2-22.2. Damage Evaluation (Figures 2-11 through 2-13).

2-22.2.1. Gross Damage Evaluation. Classify a damaged sheet metal beam, frame, spar, or bulkhead as failed if any of the following conditions exist:

a. Component shows signs of severe overstress such as twisting or buckling.
b. Cap is damaged in four or more separate locations within a length of 24 inches.
c. Damage in any one location obviously exceeds 1/3 of cap section or 1/2 of web section.
d. Three or more fasteners next to each other which join a cap and web are sheared, pulled-through, or missing.
e. Fasteners securing component to another structure are sheared, pulled-through, or missing at three or more locations next to each other.
f. Twenty percent or more of fasteners are damaged.
g. Angles or clips securing component to another structure are severely damaged or failed at three or more locations next to each other.
h. More than 25 percent of the clips or angles are damaged.
i. Stiffeners on opposite sides of web are failed or two or more stiffeners next to each other on same side of web are battle damaged (Figures 2-11 and 2-12).
j. Splice or gusset connecting component to another structural member is failed.
k. Damage to component, if left unrepaired, would obviously overstress, damage, or impair operation of another aircraft system or component

NOTE

Do not proceed with detail damage evaluation if any of these conditions exist. Classify component as failed and record damage on DA Form 2408-13-3. Continue evaluating, recording, and labeling damage to other structural members. Perform repair deferrability assessment procedure in accordance with Paragraph 2-38.5.

2-22.2.2. Detail Damage Evaluation of Cap Elements.

1. Evaluate damage to each cap independently. Measure each area of damage separately starting with largest damage.

2. Measure damage across length of cap (CL) and across depth of cap (CD).

3. Record damage on DA Form 2408-13-3.

4. Continue evaluating, recording, and labeling damage to other structural members.

5. Perform repair deferrability assessment procedure in accordance with Paragraph 2-38.5.

2-22.2.3. Detail Damage Evaluation of Web Elements.

1. Measure each area of damage (crack or puncture) separately. Start with largest damage.

2. Measure maximum distance across damage (WL). Measure distance (D) between damage and next closest damage on web.

3. Record damage measurements on DA Form 2408-13-3.

4. Continue evaluating, recording, and labeling damage to other structural members.

5. Perform repair deferrability assessment procedure in accordance with Paragraph 2-38.5.

NOTE

Two damage limit procedures apply to web damage: The maximum damage length (WL) and the spacing (D) between the largest damage and any other damage on web, and the summed total of measured damage (WL) dimensions for the web will be compared to the damage limit tables. If either damage limit is exceeded, classify web as failed.

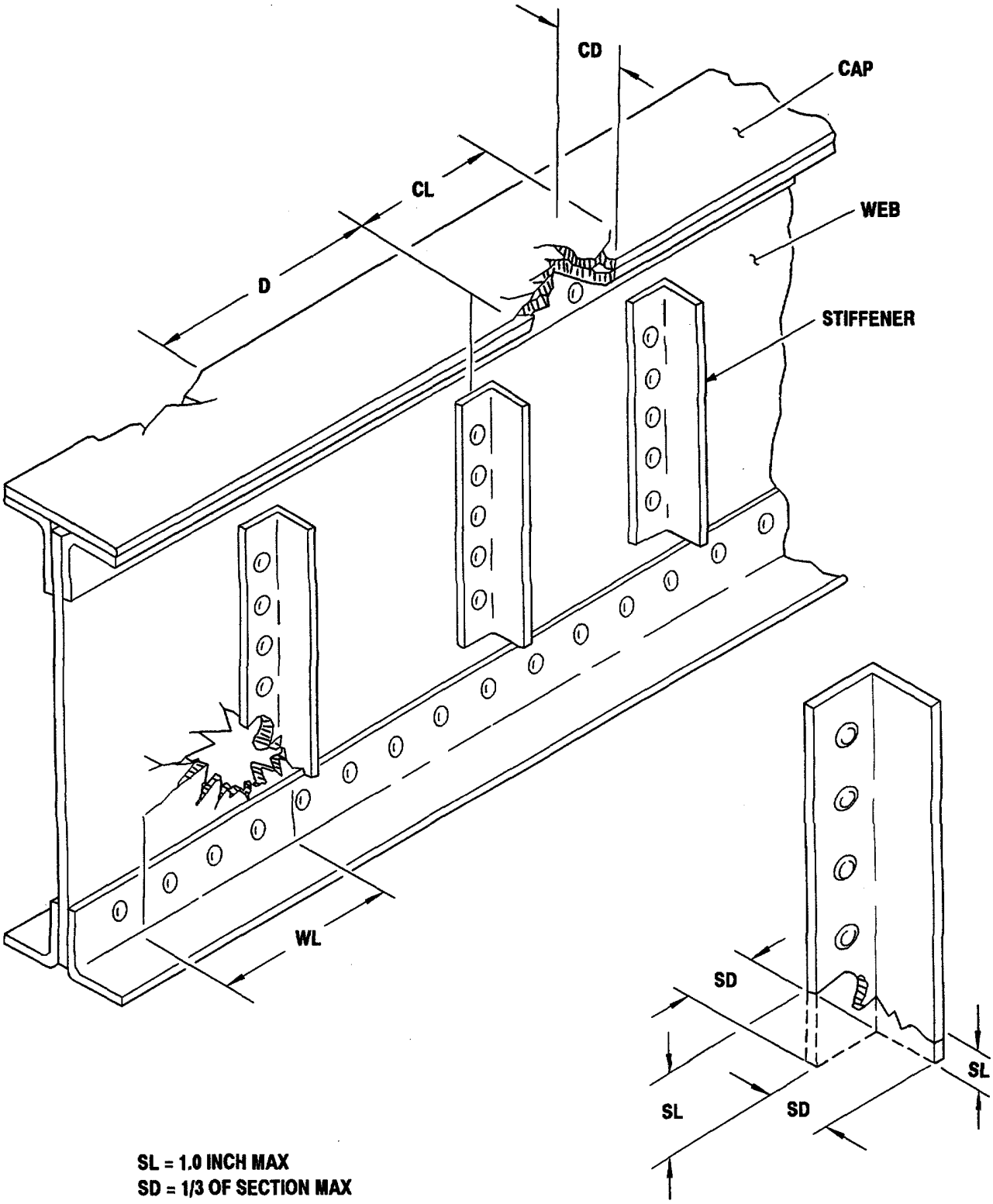

M102-015-1

Figure 2-11. Evaluating Damage to Built-Up Sheet Metal Beams (Sheet 1 of 2)

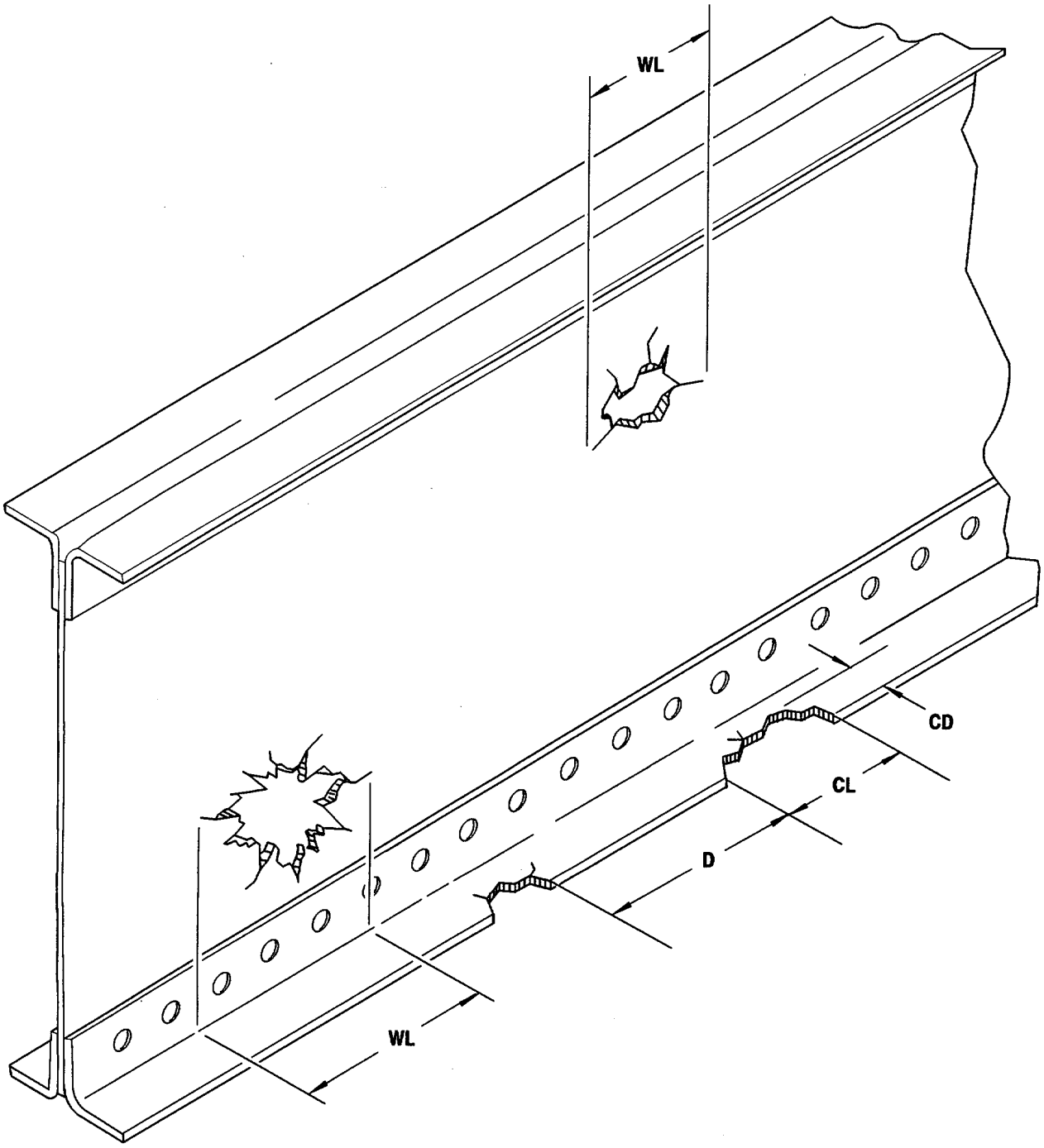

M102-015-2

Figure 2-11. Evaluating Damage to Built-Up Sheet Metal Beams (Sheet 2 of 2)

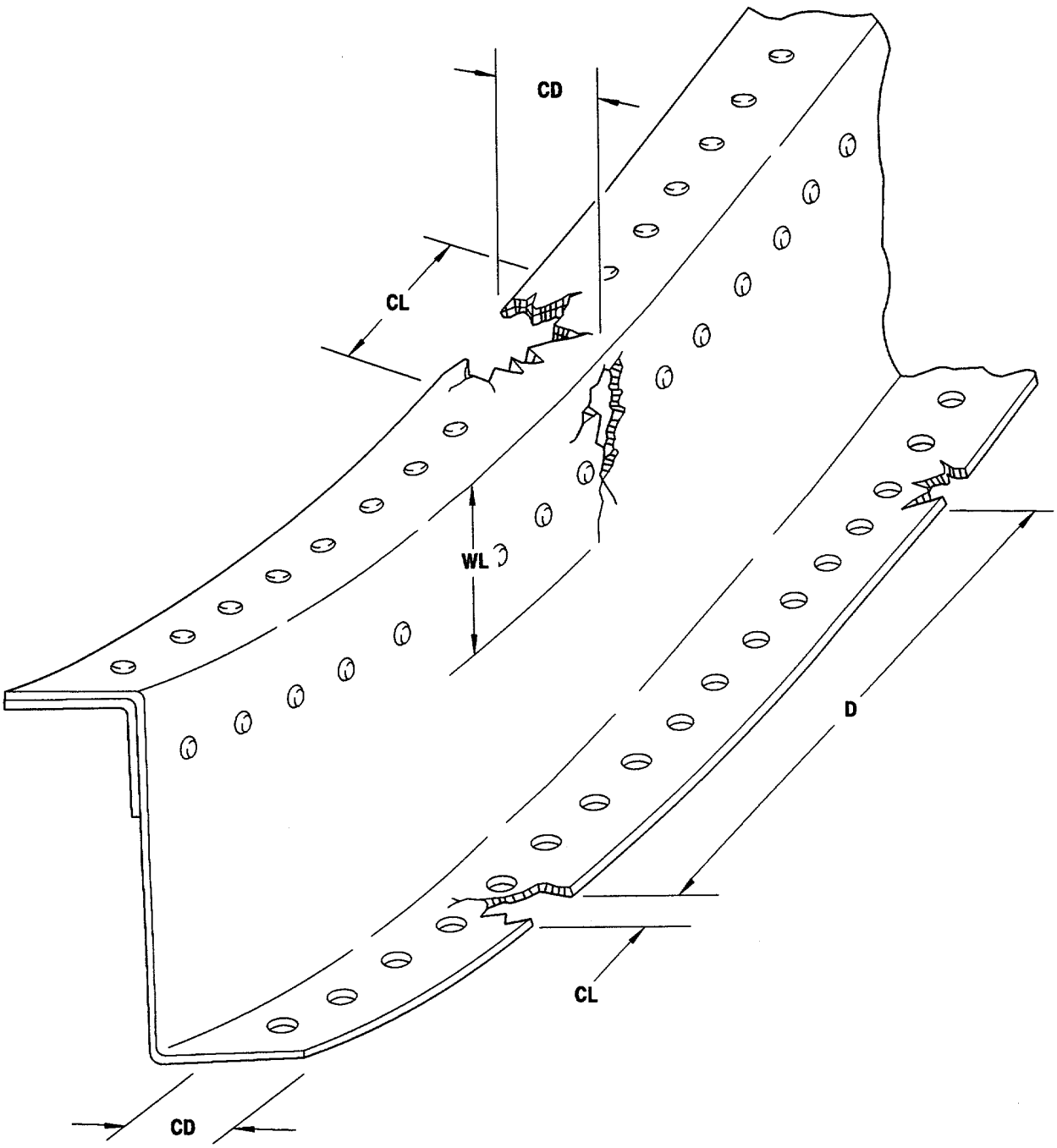

M102-016-1

Figure 2-12. Evaluating Damage to Built-Up Sheet Metal Frames (Sheet 1 of 2)

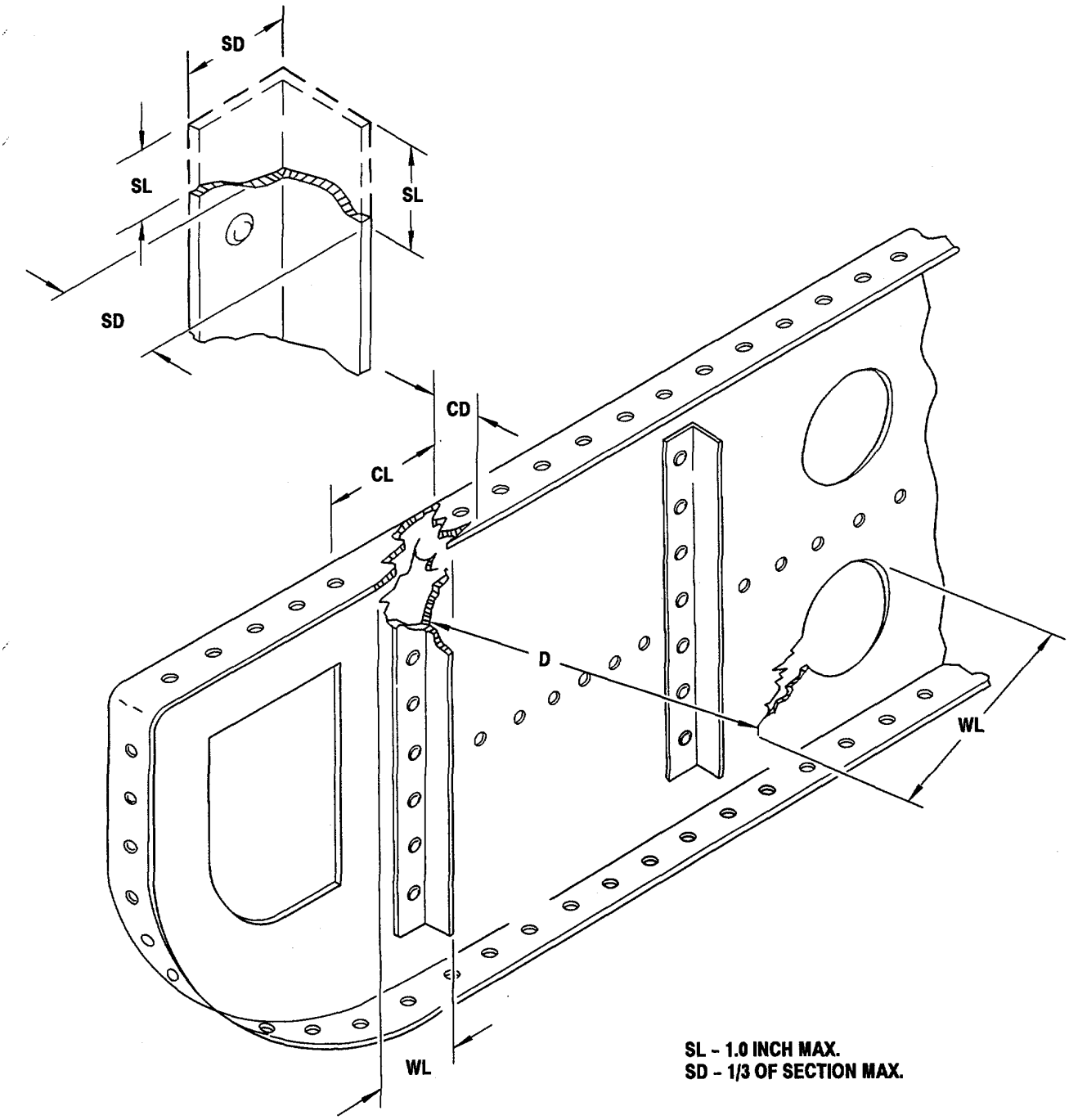

M102-016-2

Figure 2-12. Evaluating Damage to Built-Up Sheet Metal Frames (Sheet 2 of 2)

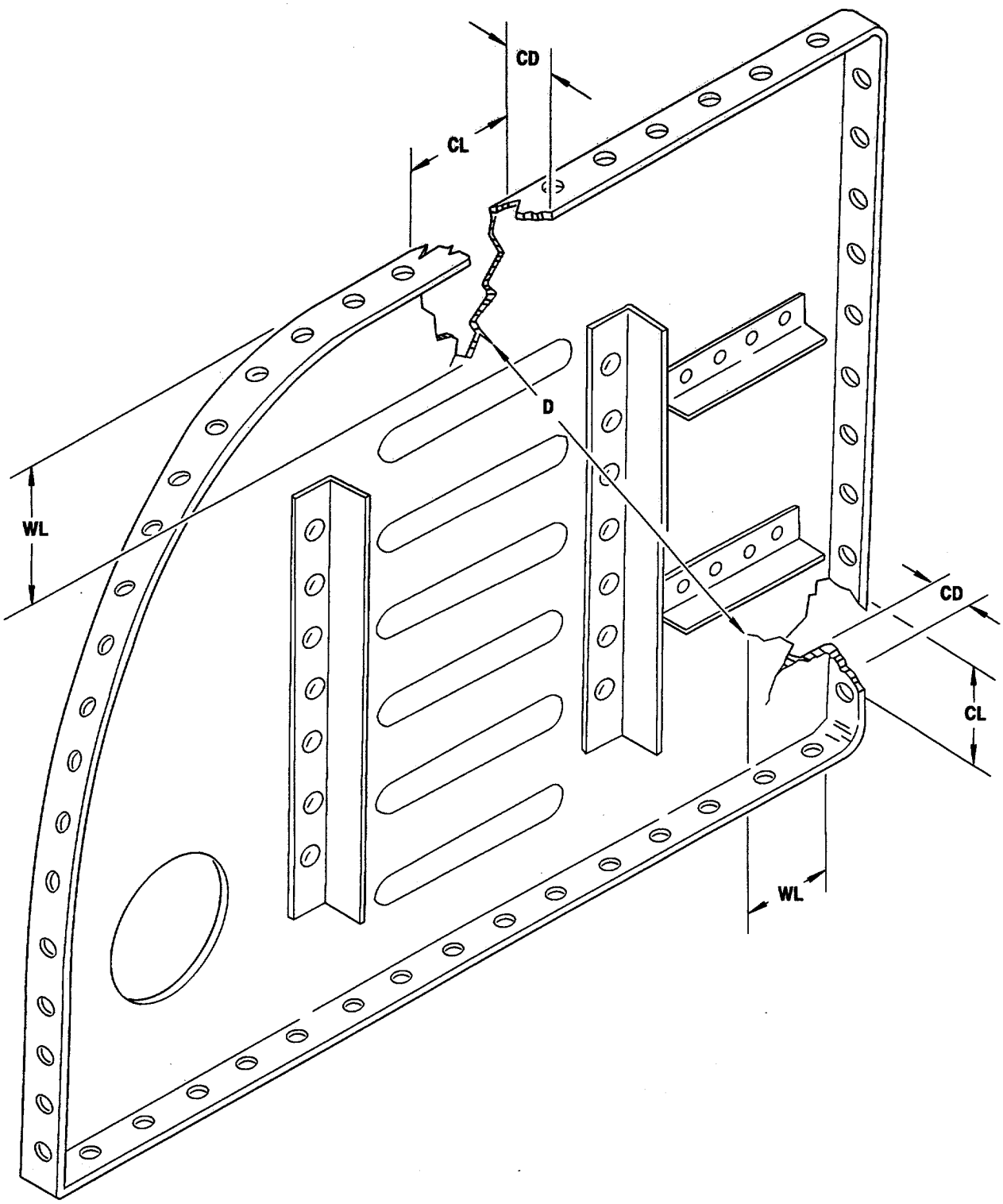

M102-017

Figure 2-13. Evaluating Damage to Built-Up Sheet Metal Bulkheads

2-23. EVALUATION OF DAMAGE TO MACHINED FRAMES AND BEAMS.

2-23.1. Description. Heavy machined frames and beams are found in the cabin section. The frames and beams are made primarily from 7075-T6511 Aluminum Alloy forgings. These components are typically an I-section, J-section, or T-section member with webs and caps. They incorporate a variety of machined stiffeners, lugs, and mounting bosses. Connections to other structural members are made with high-strength mechanical fasteners.

The machined frames and beams are among the most critical members in the airframe. They support concentrated loads from the main transmission, main landing gear, and the 30mm gun. They are also designed to provide a protective shell for crew members in the event of crash. The loads on these components produce high-axial stresses (tension and compression) in the caps. In the web they produce high-shear stresses. The components experience high-static and quasi-static loads. In some areas they are also subjected to high-cycle, rotor induced fatigue loads. This is especially true in the vicinity of the main transmission. This type of fatigue loading may cause the damage to become more severe.

2-23.2. Damage Evaluation (Figures 2-14 and 2-15).

2-23.2.1. Gross Damage Evaluation. Classify damaged frame or beam as failed if any of the following conditions exist:

a. Component shows signs of severe overstress such as twisting or buckling.

b. Cap is damaged in four or more separate locations within a length of 24 inches.

c. Damage in any one location obviously exceeds 1/3 of cap section or 1/2 of web section.

d. Fasteners securing component to another structure are sheared, pulled-through, or missing at three or more locations next to each other.

e. Twenty percent or more of fasteners are damaged.

f. Stiffeners on opposite sides of web are damaged, or two or more adjoining stiffeners on same side of web are damaged (Figure 2-14).

g. Splice or gusset connecting component to another structural member is failed.

h. Damage to component, if left unrepaired, would obviously overstress, damage, or impair operation of another aircraft system or component.

NOTE

Do not proceed with detail damage evaluation if any of these conditions exist. Classify component as failed and record damage on DA Form 2408-13-3. Continue evaluating, recording, and labeling damage to other structural members. Perform repair deferrability assessment procedure in accordance with Paragraph 2-38.5.

2-23.2.2. Detail Damage Evaluation of Cap Elements.

1. Evaluate damage to each cap independently. Measure each area of damage separately starting with largest damage.

2. Measure damage across length of cap (CL) and across depth of cap (CD).

3. Record damage on DA Form 2408-13-3.

4. Continue evaluating, recording, and labeling damage to other structural members.

5. Perform repair deferrability assessment procedure in accordance with Paragraph 2-38.5.

2-23.2.3. Detail Damage Evaluation of Web Elements.

1. Measure each area of damage (crack or puncture) separately. Start with largest damage.

2. Measure maximum distance across damage (WL). Measure distance (D) between damage and next closest damage on web.

3. Record damage measurements on DA Form 2408-13-3.

4. Continue evaluating, recording, and labeling damage to other structural members.

5. Perform repair deferrability assessment procedure in accordance with Paragraph 2-38.5.

NOTE

Two damage limit procedures apply to web damage: The maximum damage length (WL) and the spacing (D) between the largest damage and any other damage on web, and the summed total of measured damage (WL) dimensions for the web will be compared to the damage limit tables. If either damage limit is exceeded, classify web as failed.

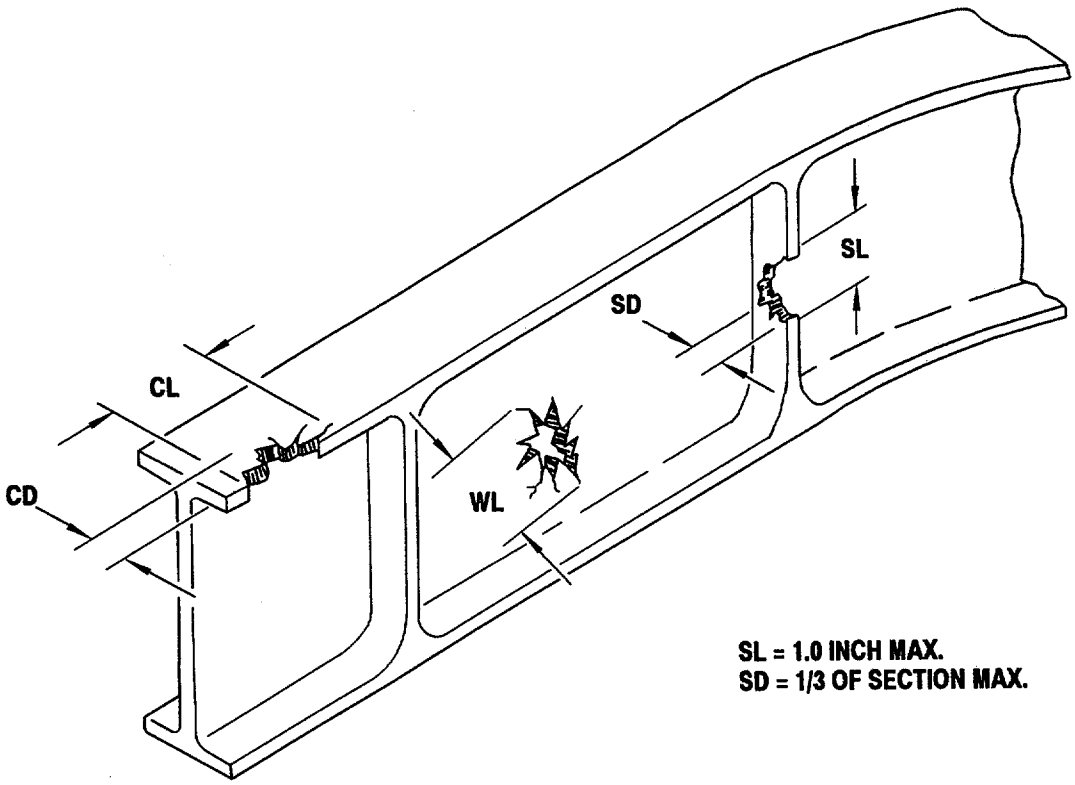

M102-018

Figure 2-14. Evaluating Damage to Machined Frames and Beams

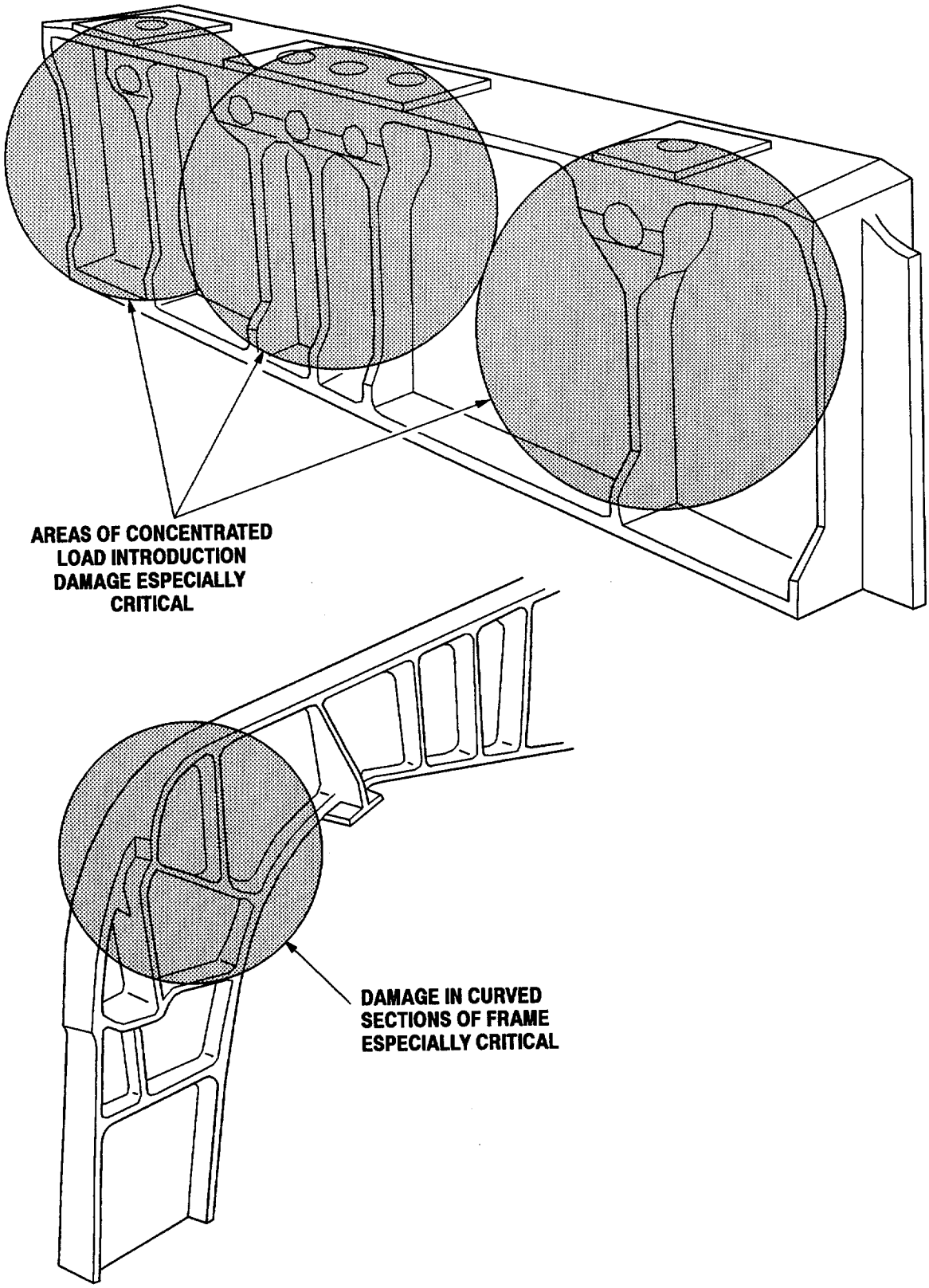

M102-019

Figure 2-15. Critical Regions of Machined Frames and Beams

2-24. EVALUATION OF DAMAGE TO MACHINED FITTINGS.

2-24.1. Description. Machined fittings are found throughout the airframe. These fittings are made from forged aluminum, steel, or titanium. They come in a wide range of shapes, sizes, and functions. They are used with high-strength mechanical fasteners to join structural assemblies. Machined fittings are also used to secure aircraft components such as gearboxes and landing gear to the airframe.

Machined fittings are normally used in highly concentrated load paths. Therefore they are among the least damage-tolerant components in the airframe. They are subjected to a variety of loads (bending, tension, and compression) depending on their use and design. Some fittings, such as those retaining the drive system transmissions to the airframe, are also exposed to significant fatigue loads which can cause the damage to worsen.

2-24.2. Damage Evaluation (Figure 2-16).

2-24.2.1. Gross Damage Evaluation. Classify a damaged fitting as failed if any of the following conditions exist:

a. Damage to fitting has removed more than 20 percent of structural section in any one location.

b. One or more fasteners connecting fitting to structure or to aircraft component are bent, sheared, stripped, or loose.

c. The fitting shows signs of severe overstress or structural distortion.

NOTE

Do not proceed with detail damage evaluation if any of these conditions exist. Classify fitting as failed and record damage on DA Form 2408-13-3. Continue evaluating, recording, and labeling damage to other structural members. Perform repair deferrability assessment procedure in accordance with Paragraph 2-38.5.

2-24.2.2. Detail Damage Evaluation.

1. Measure and record size and depth of nicks, gouges, spalls, and cracks.

2. Record damage on DA Form 2408-13-3.

3. Continue evaluating, recording, and labeling damage to other structural members.

4. Perform repair deferrability assessment procedure in accordance with Paragraph 2-38.5.

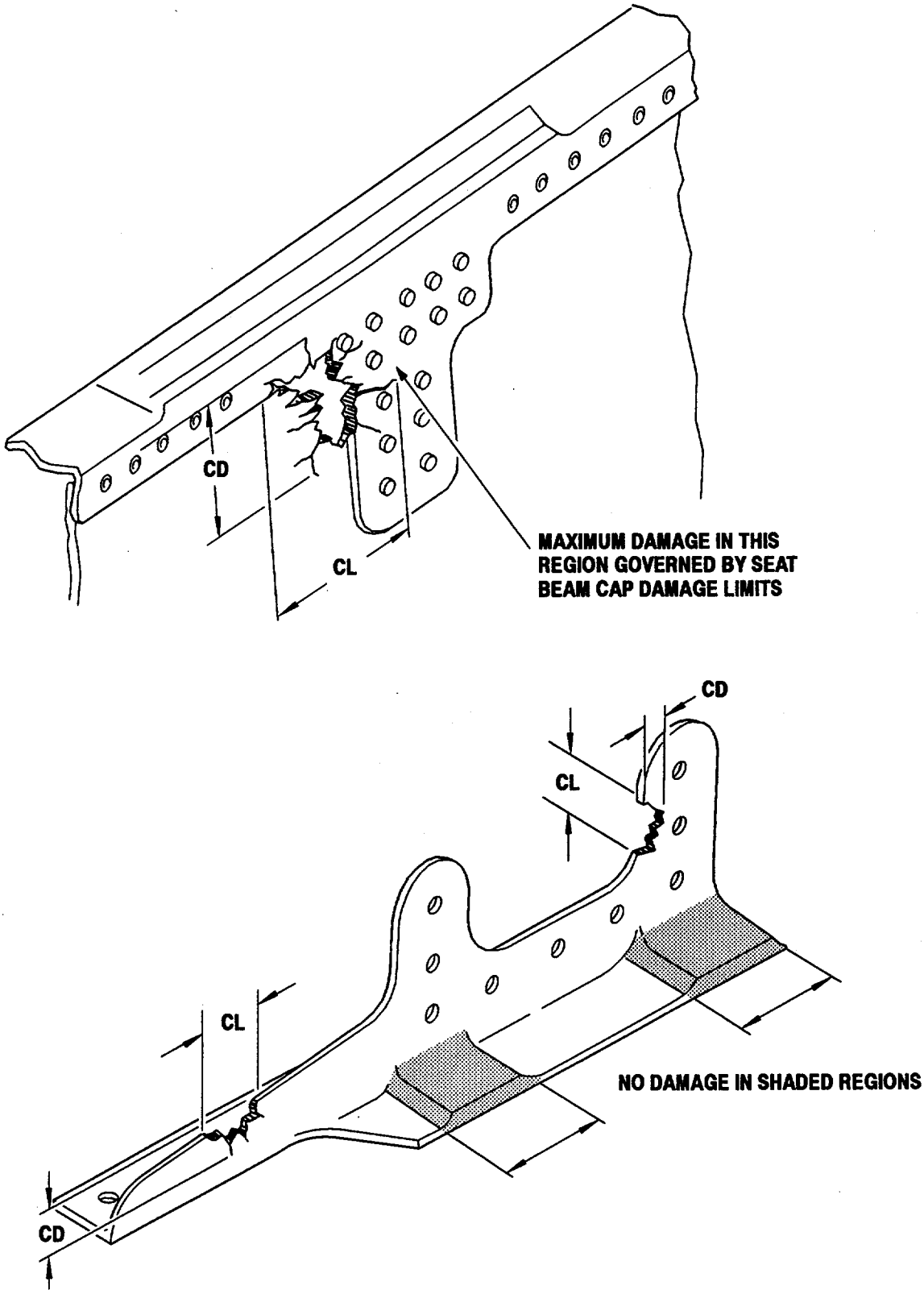

M102-020

Figure 2-16. Evaluating Damage to Machined Fittings

2-25. EVALUATION OF DAMAGE TO LONGERONS.

2-25.1. Description. Longerons are found in the cabin and tailboom sections and are installed lengthwise. Made primarily from 7075-T6 Aluminum Alloy, longerons are of several distinctive structural shapes. The longerons are among the main load-carrying members in the airframe. They are subjected to high bending and axial loading.

2-25.2. Damage Evaluation (Figure 2-17).

2-25.2.1. Gross Damage Evaluation. Classify a damaged longeron as failed if any of the following conditions exist:

a. The longeron shows signs of severe overstress, such as buckling or misalignment.

b. The longeron is damaged in four or more separate locations within a length of 24 inches.

c. The damage in any one location obviously exceeds 25 percent of the structural section.

d. 20 percent or more of the total number of fasteners are damaged.

e. One or more fasteners securing the longeron to a major fitting are damaged or missing.

f. Damage to the longeron, if left unrepaired, would obviously overstress, damage, or impair the operation of another aircraft system or component.

NOTE

Do not proceed with detail damage evaluation if any of these conditions exist. Classify longeron as failed and record damage on DA Form 2408-13-3. Continue evaluating, recording, and labeling damage to other structural members. Perform repair deferrability assessment procedure in accordance with Paragraph 2-38.5.

2-25.2.2. Detail Damage Evaluation.

1. Measure each area of damage separately. Start with the largest area of damage.

2. Measure damage across length of longeron (CL) and across the depth of longeron (CD).

3. Measure distance between damage and next closest damage (D).

4. Record damage on DA Form 2408-13-3.

5. Continue evaluating, recording, and labeling damage to other structural members.

6. Perform repair deferrability assessment procedure in accordance with Paragraph 2-38.5.

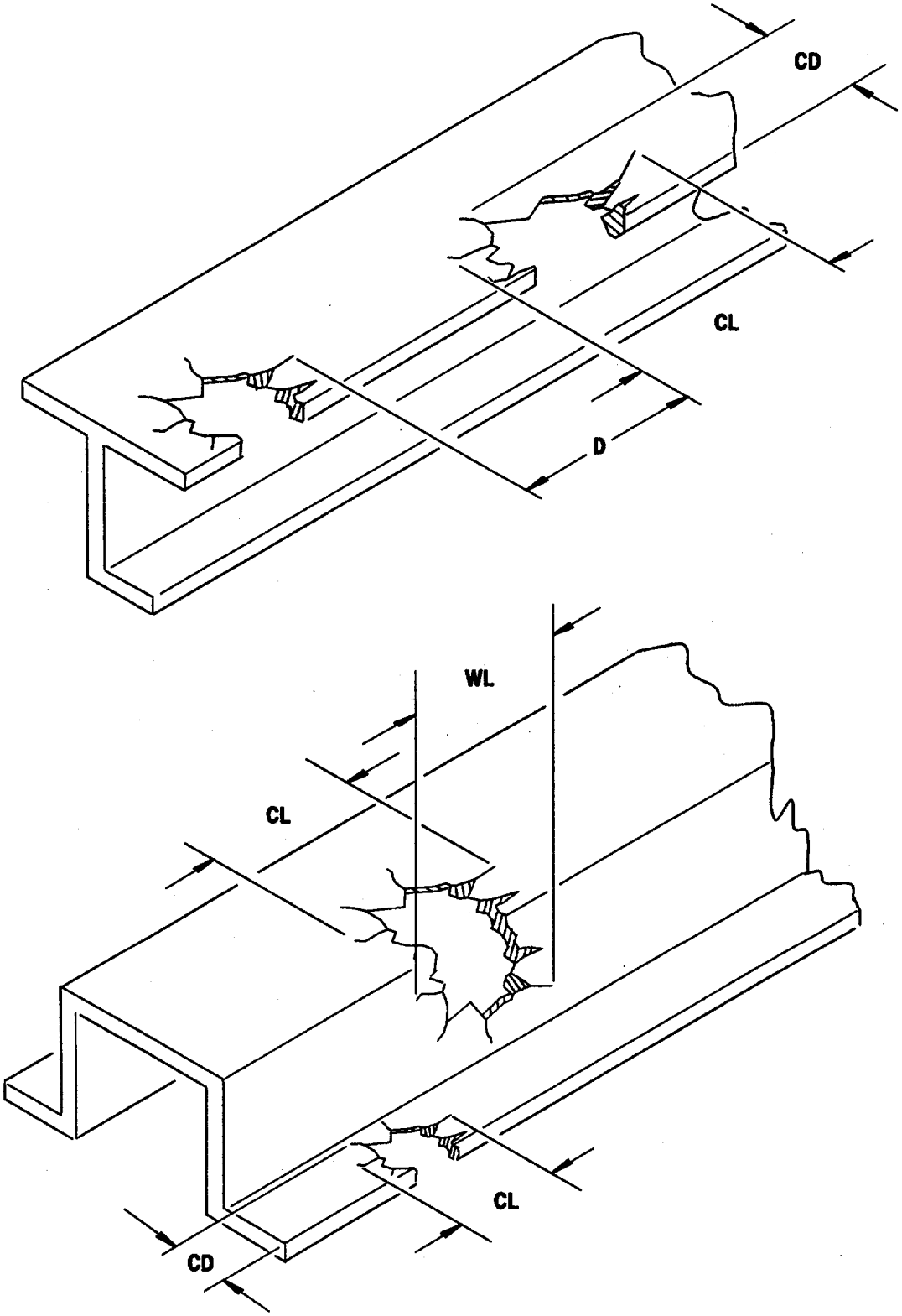

M102-021

Figure 2-17. Evaluating Damage to Longerons

2-26. EVALUATION OF DAMAGE TO SPLICES, STRAPS, DOUBLERS, AND GUSSETS (JOINTS).

2-26.1. Description. Several types of plates and angles are used to join or splice together the many airframe structures. Straps and doublers are used in many areas to strengthen the caps and webs of structural members. Splices are particularly critical parts of the structure. This is because their failure can cause one or several structural members to be ineffective. Straps, gussets, and structural splices are subjected to a variety of loads and tend to be highly stressed.

2-26.2. Damage Evaluation (Figure 2-18).

2-26.2.1. Gross Damage Evaluation. Unless otherwise directed, damage to a splice, strap, doubler, or gusset will be evaluated as part of the element to which it attaches. Classify a damaged splice, strap, doubler, or gusset as failed if any of the following conditions exist:

a. Part shows signs of severe overstress, such as twisting or misalignment.

b. Damage to part in any one location obviously exceeds 20 percent of the structural section.

c. Part has significant damage at intersection of two members it connects.

d. Fasteners securing part to a structural member(s) are sheared, pulled through, or missing at two or more adjoining locations.

e. More than 20 percent of total number of fasteners are damaged.

f. Damage to part, if left unrepaired, would obviously overstress, damage, or impair operation of another aircraft system or component.

NOTE

Do not proceed with detail damage evaluation if any of these conditions exist. Classify component as failed and record damage as damage to the structural member on DA Form 2408-13-3. Continue evaluating, recording, and labeling damage to other structural members. Perform repair deferrability assessment procedure in accordance with Paragraph 2-38.5.

2-26.2.2. Detail Damage Evaluation.

1. Identify structural member(s) that attach to strap, splice, doubler, or gusset.

2. Measure each area of damage separately. Start with largest area of damage.

3. Record damage on DA Form 2408-13-3.

4. Continue evaluating, recording, and labeling damage to other structural members.

5. Perform repair deferrability assessment procedure in accordance with Paragraph 2-38.5.

NOTE

Damage to the splice, strap, doubler, or gusset must not exceed 50 percent of the damage limits of the attaching structural member(s). Consider the joint as failed and classify the attaching structural
member(s) as failed if the measured damage exceeds 50 percent of the damage limits.

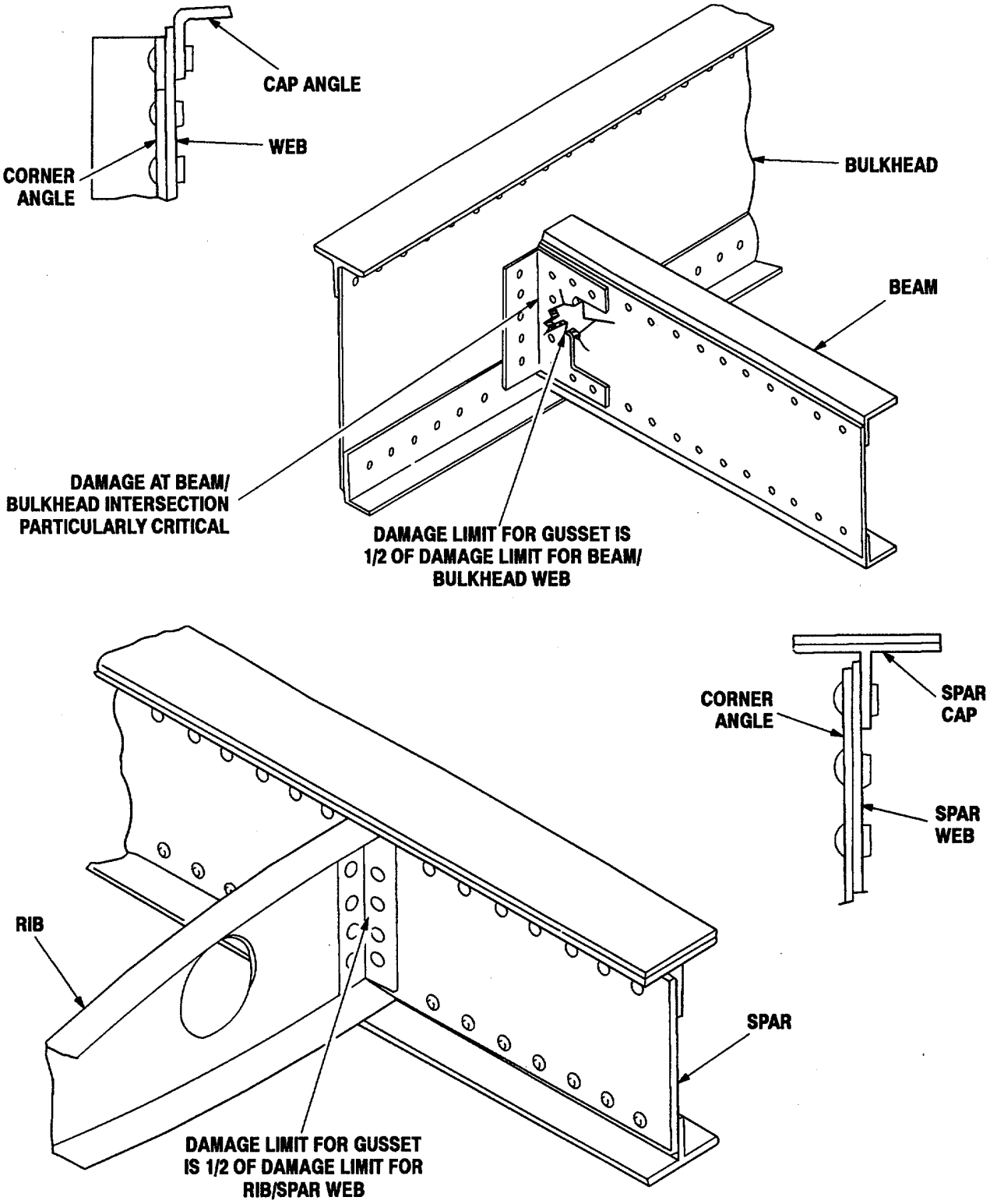

M102-022-1

Figure 2-18. Evaluating Damage to Splices, Straps, Doublers, and Gussets (Sheet 1 of 2)

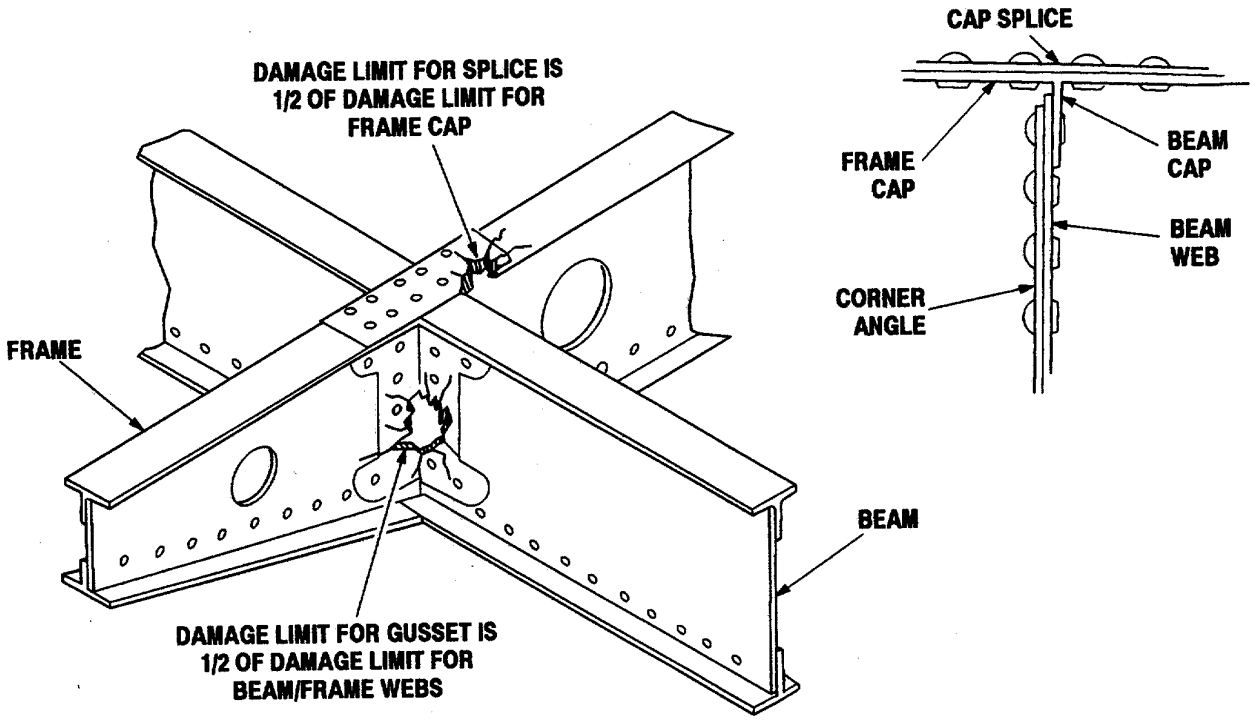

M102-022-2

Figure 2-18. Evaluating Damage to Splices, Straps, Doublers, and Gussets (Sheet 2 of 2)

2-27. EVALUATION OF DAMAGE TO STRINGERS.

2-27.1. Description. Stringers are used in all of the major sections of the airframe. They are made primarily of 7075-T6 Aluminum Alloy. Stringers run lengthwise in the airframe. They are light weight elements made in several structural shapes. Common shapes include hat section, J-sections, T-sections, C-sections, and L-sections. They are supported on inner framing members and are riveted directly to the skin. Stringers are axial members which are subjected to tension and compression loads. Because they depend on inside framing members for stability, their performance can be impaired by damage to the supporting structure.

2-27.2. Damage Evaluation (Figure 2-19).

2-27.2.1. Gross Damage Evaluation. Classify a damaged stringer as failed if any of the following conditions exist:

a. Stringer shows signs of severe overstress, such as buckling or crinkling.

b. Stringer is damaged in four or more separate locations within a length of 12.0 inches.

c. Damage to stringer in any one location exceeds 50 percent of stringer section.

d. Fasteners securing stringer to skin are sheared, pulled through, or missing at three or more adjoining locations.

e. Twenty percent or more of fasteners along length of stringer are damaged.

NOTE

Do not proceed with detail damage evaluation if any of these conditions exist. Classify stringer as failed and record damage on DA Form 2408-13-3. Continue evaluating, recording, and labeling damage to other structural members. Perform repair deferrability assessment procedure in accordance with Paragraph 2-38.5.

2-27.2.2. Detail Damage Evaluation.

1. Measure each area of damage separately. Start with largest damage.

2. Measure damage along length of stringer (CL) and across depth of stringer (CD).

3. Measure distance between damage and next closest damage (D).

4. Record damage on DA Form 2408-13-3.

5. Continue evaluating, recording, and labeling damage to other structural members.

6. Perform repair deferrability assessment procedure in accordance with Paragraph 2-38.5.

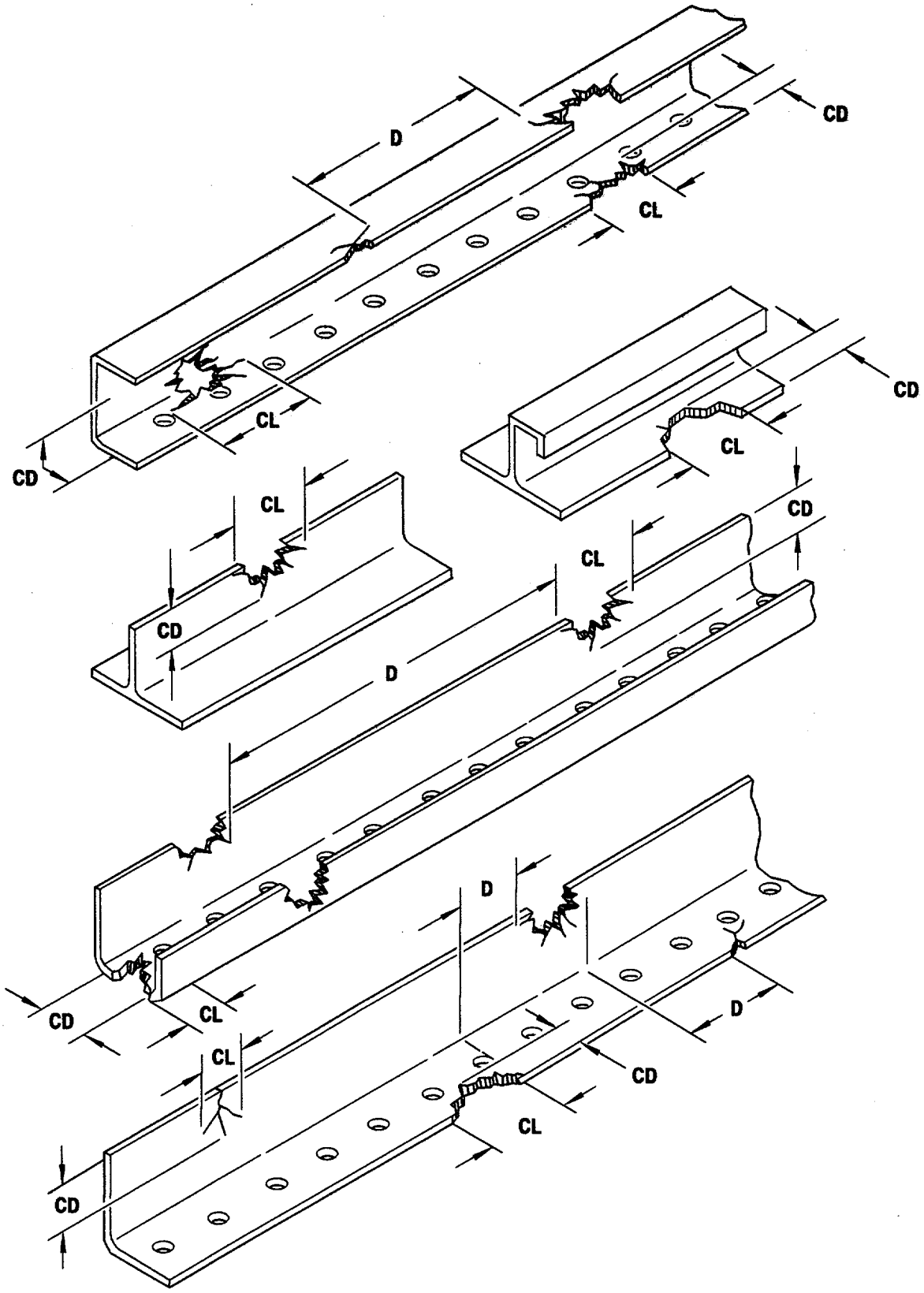

M102-023

Figure 2-19. Evaluating Damage to Stringers

2-28. EVALUATION OF DAMAGE TO SKIN PANELS.

2-28.1. Description. The skin panels are made of 2024-T3 A1Clad which is riveted to the airframe substructure. An individual skin panel is defined as that area of the skin bound above and below by stringers and front to rear by frames. The skins are continuous over large areas of the airframe. They serve mainly to support torsion moments and shear loads. Skin panel damage can affect the performance of other structural members.

2-28.2. Damage Evaluation (Figure 2-20).

2-28.2.1. Gross Damage Evaluation. Classify a damaged skin panel as failed if any of the following conditions exist:

a. Panel is deformed or buckled.

b. More than 25 percent of panel area is missing.

c. Any one area of damage exceeds 3.0 inches in length or 3.0 inches in diameter.

NOTE

Do not proceed with detail damage evaluation if any of these conditions exist. Classify skin panel as failed and record damage on DA Form 2408-13-3. Continue evaluating, recording, and labeling damage to other structural members. Perform repair deferrability assessment procedure in accordance with Paragraph 2-38.5.

2-28.2.2. Detail Damage Evaluation.

1. Measure each area of damage (crack or puncture) separately. Start with largest damage.

2. Measure maximum distance across damage (WL).

3. Measure distance between damage and next closest damage on same panel (D).

4. Record damage on DA Form 2408-13-3.

5. Continue evaluating, recording, and labeling damage to other structural members.

6. Perform repair deferrability assessment procedure in accordance with Paragraph 2-38.5.

NOTE

Two damage limit procedures apply to skin panel damage: The maximum damage length (WL) and the spacing (D) between the largest damage and any other damage on panel, and the summed total of measured damage (WL) dimensions for the panel will be compared to the damage limit tables. If either damage limit is exceeded, classify panel as failed.

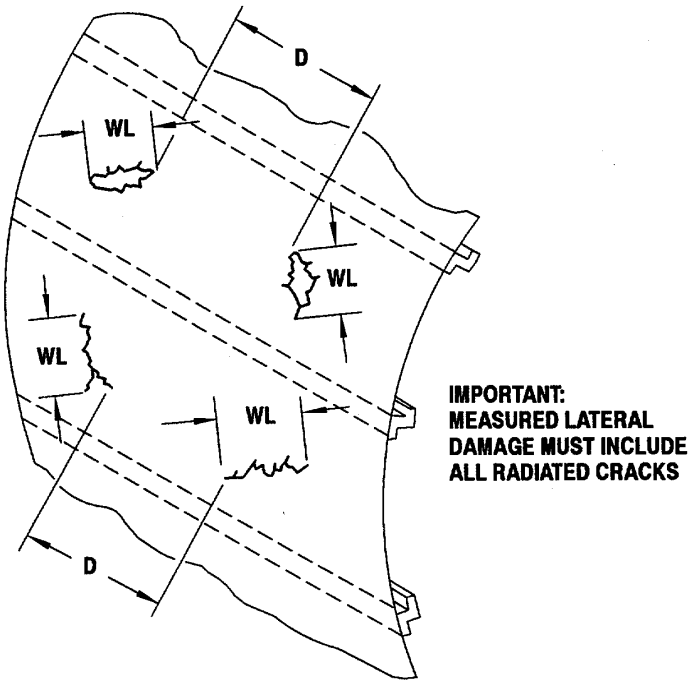

M102-024

Figure 2-20. Evaluating Damage to Skin Panels

2-29. EVALUATION OF COMBINED SKIN PANEL/STRINGER/FRAME DAMAGE.

2-29.1. Description. In a semi-monocoque structure, the skins, stringers, and frames function as a structural system. The frames support and provide stability for the stringers. The stringers support and reinforce the skins. Damage to one element can therefore weaken other undamaged elements. When any of these elements has failed it is necessary to determine if their damage will affect other members.

2-29.2. Damage Evaluation (Figure 2-21).

NOTE

Evaluate and classify damage to each element separately before evaluating combined effect of the damage. Refer to appropriate paragraph to evaluate each component separately. It is not necessary to conduct a combined damage evaluation unless one or more skin panels, stringers, or frames have been classified as failed.

To aid in evaluating combined damage effects, it will be helpful to draw a sketch of damaged area of the airframe (See Figure 2-21). Begin by marking the sketch to show those structural elements classified as failed.

The combined effect of skin, stringer, or frame damages is evaluated using four evaluation rules. More than one rule may apply to a given damage condition.

After completion and evaluation of the combined skin and stringer frame damage, continue evaluating, recording, and labeling damage to other structural members. Perform repair deferrability assessment procedure in accordance with Paragraph 2-38.5.

2-29.2.1. Evaluation Rule #1.

a. Damage to a skin panel exceeds 1.5 inches and is located within 3.0 inches of a failure in an adjoining panel. Classify the panel as failed even if its damage is within limits.

b. See Figure 2-21 (Rule #1) for example. Panel A has damage exceeding the damage limit and is classified as failed. Panel B has damage exceeding 1.5 inches which

is located within 3.0 inches of damage in Panel A. Panel B is therefore classified as failed even though its damage does not exceed the damage limit.

2-29.2.2. Evaluation Rule #2.

a. Damage to a skin panel exceeds the damage limits. The damage extends across a stringer, frame, or former into an adjoining panel. Classify the panel as failed even if its damage is within limits.

b. See Figure 2-21 (Rule #2) for example. Panel A has damage exceeding the damage limit and is classified as failed. The damage extends across the stringer and slightly into panel B. The damage limit is not exceeded in Panel B. However, the panel is classified as failed because the damage is an extension of the damage in Panel A.

2-29.2.3. Evaluation Rule #3.

a. The accumulated skin panel damage measured lengthwise exceeds half the distance between frames. Classify the stringers above and below the panel as failed even if they are undamaged. The rule applies when the damage spans two panels. The stringer damages are recorded in the bay containing the largest skin damage.

b. See Figure 2-21 (Rule #3, top) for example. The damage in Panel A exceeds the damage limit and the panel is classified as failed. The damage extends across the frame and into Panel B. Panel B is classified as failed in accordance with Rule #3. The damage in Panel A does not exceed half the distance between frames but the damage measured across both panels does. The stringer above and below are classified as failed even though they are undamaged. The stringer damages are recorded above and below Panel A which contains the largest damage.

c. See Figure 2-21 (Rule #3, bottom) for example. The damage in Panel A exceeds the damage limit and the panel is classified as failed. The damage in Panel A, measured lengthwise, exceeds half the distance between frames. The stringer above and below are classified as failed even though they are undamaged.

2-29.2.4. Evaluation Rule #4.

a. A frame is classified as failed. Classify the stringers above and below the frame damage as failed, even if they are undamaged. The damages shall be recorded in only one of the two bays on each side of the frame cut. Preferably, this is in the one containing the largest damage.

b. See Figure 2-21 (Rule #4) for example. Damage to the frame and two skin panels exceeds the damage limits. All three elements are classified as failed. Classify the stringers above and below the damaged section of the frame as failed, even though they are undamaged. The damage to Panels A and B is about equal and the stringer damages are recorded above and below Panel B.

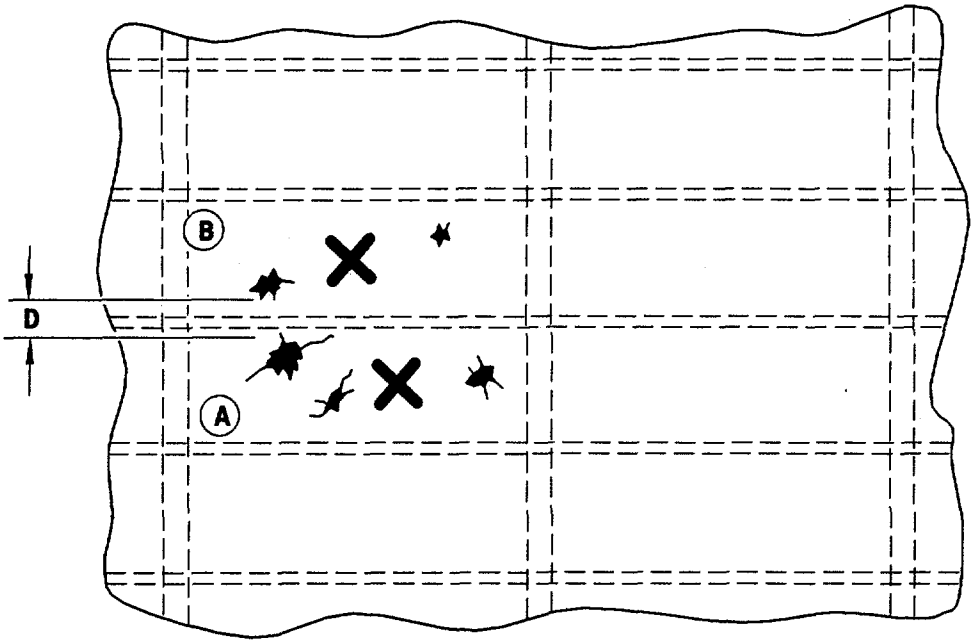

ILLUSTRATION OF RULE NO. 1

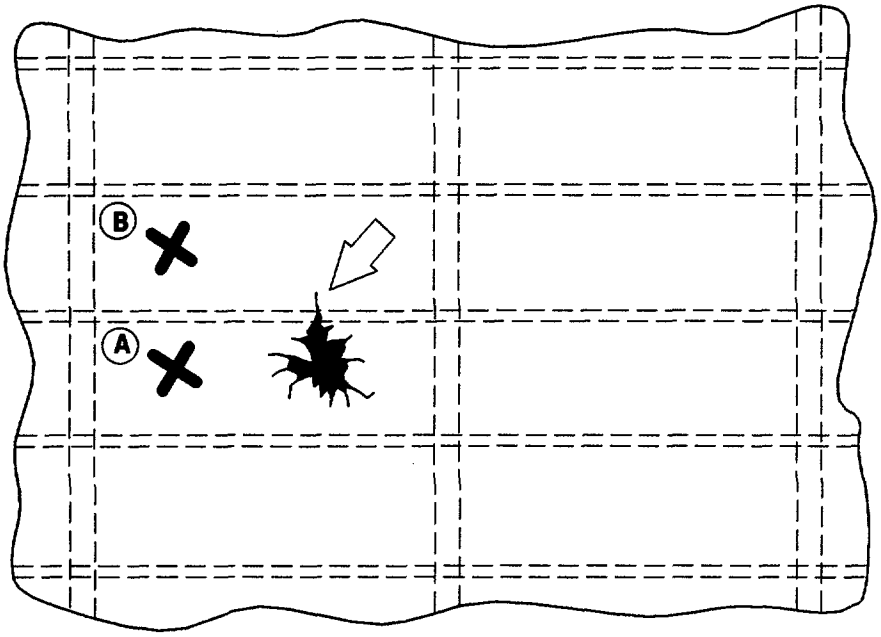

ILLUSTRATION OF RULE NO. 2

M102-025-1

Figure 2-21. Evaluating Combined Skin/Stringer/Frame Damage (Sheet 1 of 3)

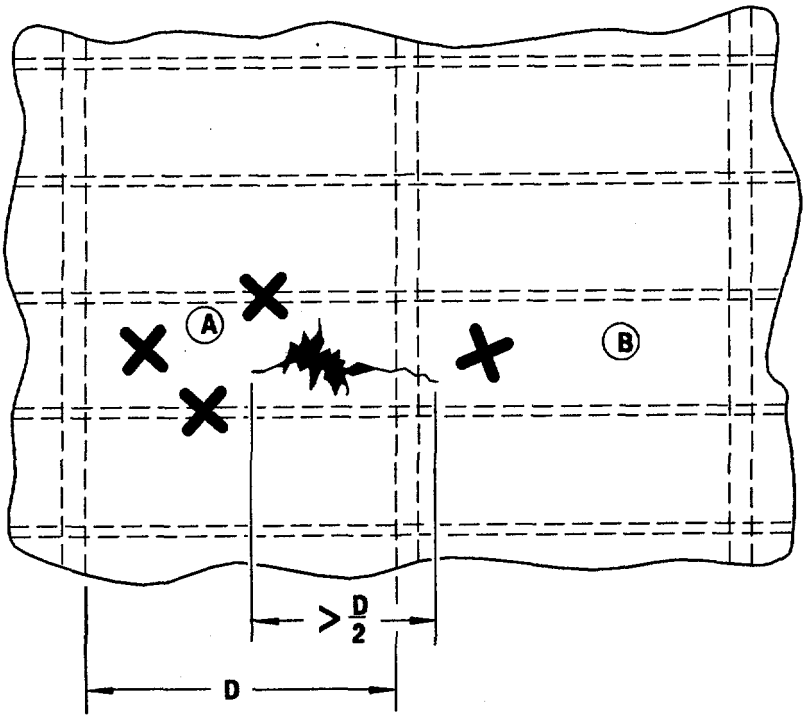

ILLUSTRATION OF RULE NO. 3 (TOP)

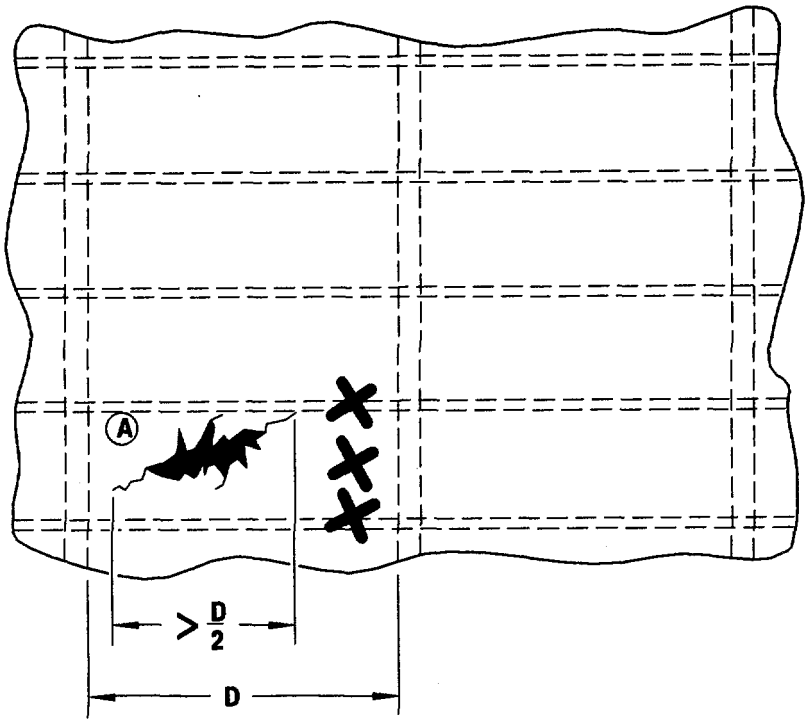

ILLUSTRATION OF RULE NO. 3 (BOTTOM)

M102-025-2

Figure 2-21. Evaluating Combined Skin/Stringer/Frame Damage (Sheet 2 of 3)

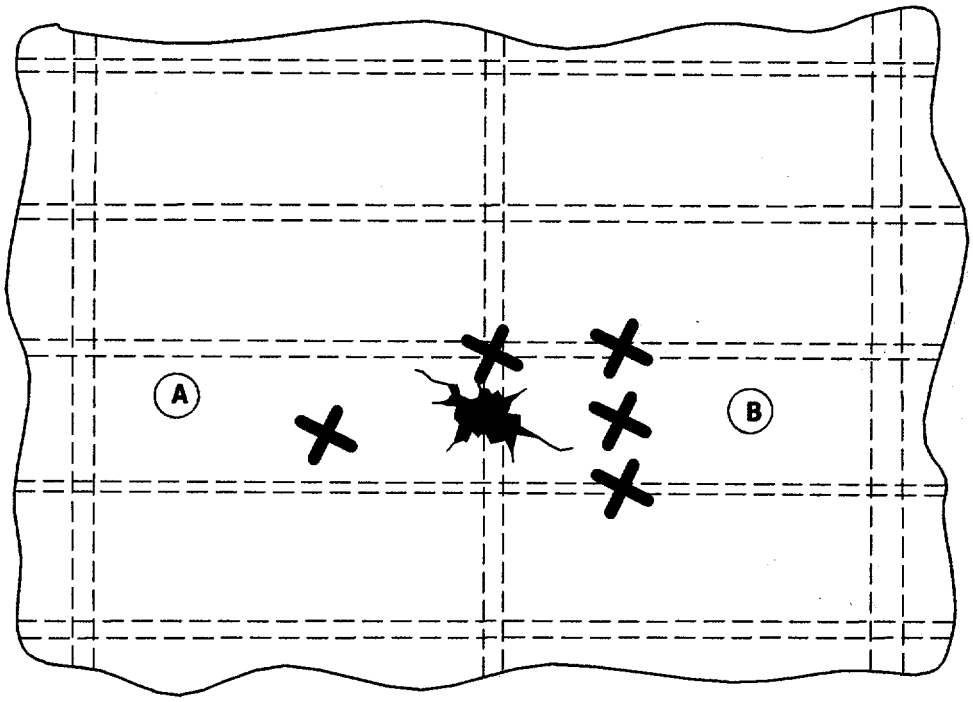

ILLUSTRATION OF RULE NO. 4

M102-025-3

Figure 2-21. Evaluating Combined Skin/Stringer/Frame Damage (Sheet 3 of 3)

2-30. EVALUATION OF DAMAGE TO HONEYCOMB-SANDWICH PANELS.

2-30.1. Description. Honeycomb-sandwich construction is used in various decks and shelves and some of the major cowlings and doors. Nomex and aluminum are used for the core materials. Kevlar and fiberglass are used for the facing material. Honeycomb-sandwich panels are mainly secondary structures. They are primarily subjected to transverse pressure loads. These loads are caused by walking, the weight of equipment, or aerodynamic forces.

2-30.2. Damage Evaluation (Figure 2-22).

1. Classify honeycomb-sandwich structure as failed if any of the following conditions exist:

   a. Panel is damaged to the extent that it cannot support weight of personnel, cargo, or equipment for which it was designed.

   b. Panel shows obvious signs of severe overstress, such as collapsing or buckling.

   c. Panel is on the outside of aircraft where it is exposed to aerodynamic forces. Also, if damage is large enough to produce peeling or tearing of structure in flight.

   d. The panel is secured by mechanical fasteners. Three or more adjoining fasteners are sheared, pulled-through, or missing.

   e. Twenty percent or more of total number of fasteners are damaged.

2. Record damage on DA Form 2408-13-3.

3. Continue evaluating, recording, and labeling damage to other structural members.

4. Perform repair deferrability assessment procedure in accordance with Paragraph 2-38.6 or Paragraph 2-38.7.

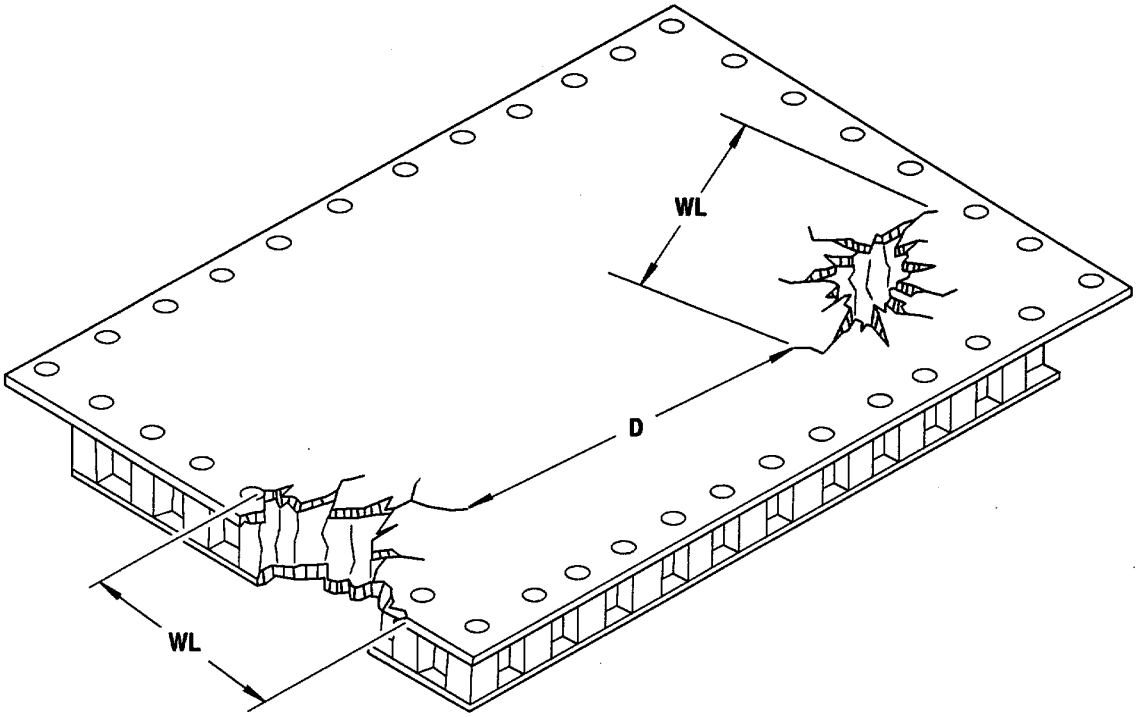

M102-026

Figure 2-22. Evaluating Damage to Honeycomb Sandwich Structures

2-31. EVALUATION OF DAMAGE TO SHEET METAL FLOOR AND DECKS.

2-31.1. Description. Sheet metal floor panels are used in the cockpit. Made of thin-gage aluminum, the panels are secured with screws to the cockpit sub-structure. The floor panels are considered secondary structures. They are subjected mainly to transverse pressure loads caused by walking.

2-31.2. Damage Evaluation (Figure 2-23).

1. Classify sheet metal floor panel as failed if any of the following conditions exist:

    a. Panel is damaged to the extent that it cannot support weight of people walking on it.

    b. Panel shows signs of severe overstress, such as collapsing or buckling.

    c. Fasteners securing panel are sheared, pulled through, or missing at three or more adjoining locations.

    d. Twenty percent or more of total number of fasteners are damaged.

    e. Damage to panel will interfere with crew functions or overstress other systems components.

2. Record damage on DA Form 2408-13-3.

3. Continue evaluating, recording, and labeling damage to other structural members.

4. Perform repair deferrability assessment procedure in accordance with Paragraph 2-38.6 or Paragraph 2-38.7.

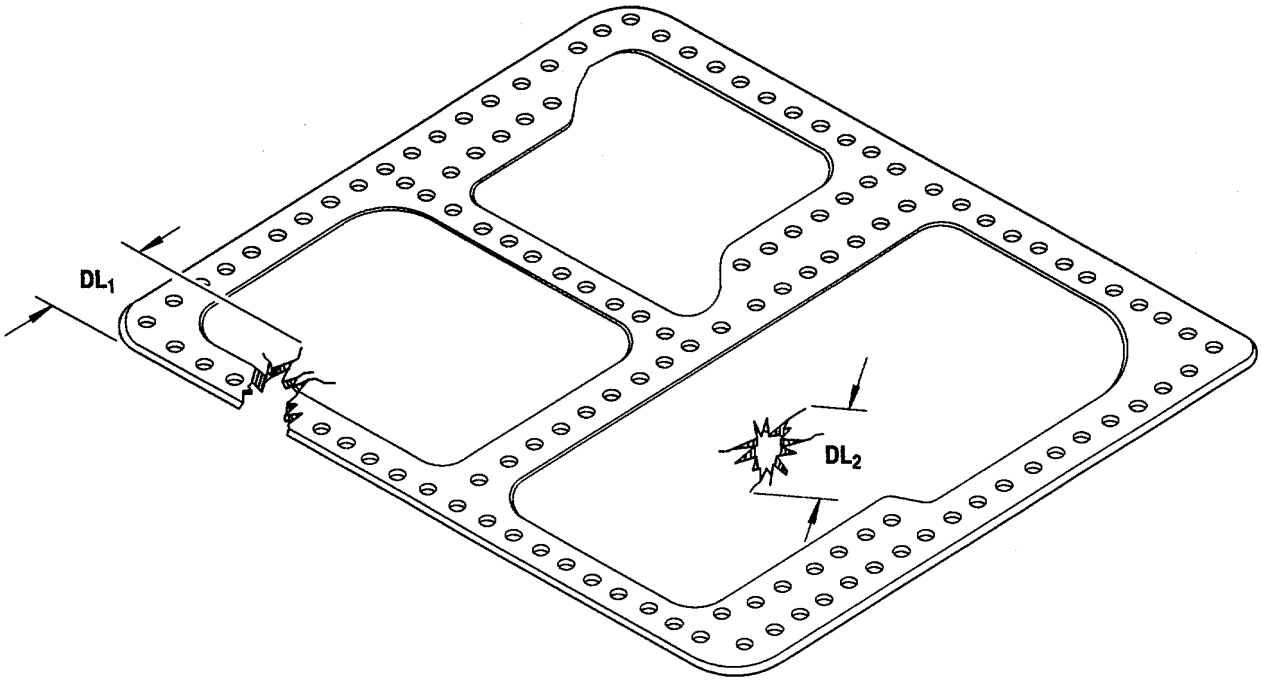

M102-029

Figure 2-23. Evaluating Damage to Sheet Metal Floors and Decks

2-32. EVALUATION OF DAMAGE TO SHEET METAL RIBS, FORMERS, INTERCOSTALS, AND CHANNELS.

2-32.1. Description. There are a large number of light sheet metal components in the airframe. The components are made primarily from 2024-T42 Aluminum Alloy. They are typically either sheet metal stampings or simple riveted assemblies. There are many structure shapes and sizes among those components. In general, their principle elements are a flat web area and integral or mechanically attached flanges or caps.

Components such as ribs, formers, and intercostals are of secondary structural importance and are generally lightly loaded in use. They are usually located between adjoining frames or spars. They serve mainly as supports for the aircraft skin in areas where major framing is absent. They also provide a supporting structure for access doors and aircraft equipment. In evaluating damage to these components, loss of function and its effect on other systems will be more important than loss of structural strength.

2-32.2. Damage Evaluation (Figure 2-24).

1. Classify rib, former, intercostal, or channel as failed if any of the following conditions exist:

    a. Damage (crack or hole) in any one location exceeds 24 percent of structural section.

    b. Component shows signs of severe overstress such as buckling or misalignment.

    c. Fasteners securing the component are sheared, pulled-through, or missing in three or more adjoining locations.

    d. Twenty percent or more of total number of fasteners are damaged.

    e. Damage to component would overstress, damage, or hinder performance of another structure or system component.

2. Record damage on DA Form 2408-13-3.

3. Continue evaluating, recording, and labeling damage to other structural members.

4. Perform repair deferrability assessment procedure in accordance with Paragraph 2-38.6.

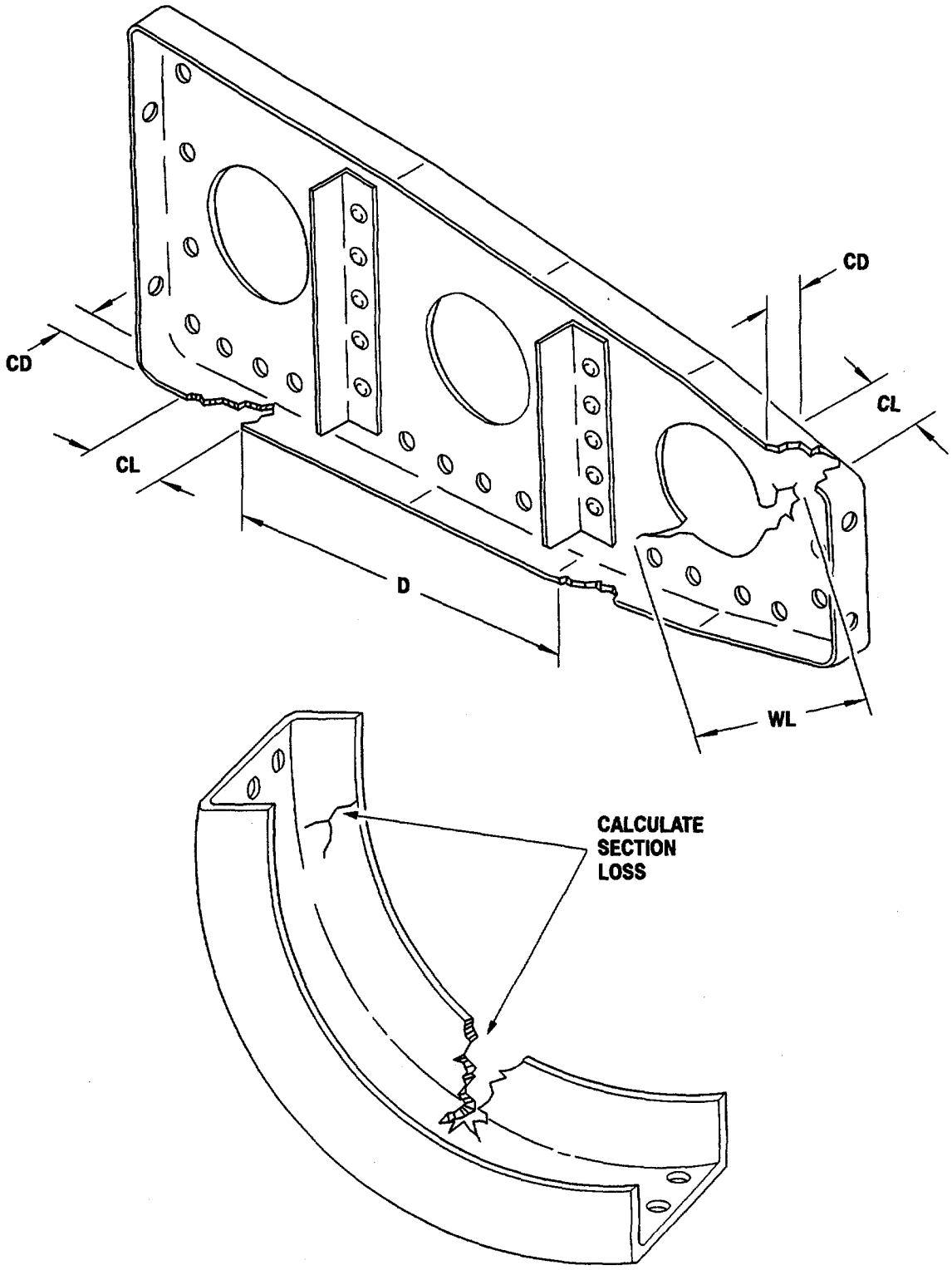

M102-030

Figure 2-24. Evaluating Damage to Sheet Metal Ribs, Formers, Intercostals, and Channels

2-33. EVALUATION OF DAMAGE TO CANOPY.

2-33.1. Description. The canopy, which covers the pilot and CPG stations, consists of five acrylic plastic panels and two laminated glass windshields. A blast shield separates the pilot and CPG stations. The upper section of the blast shield is transparent.

2-33.2. Damage Evaluation.

1. Classify windshield or panel as failed if any of the following conditions exist:

    a. Damage to panel or windshield or attaching structure prevents it from being adequately secured to airframe.
    b. There are large cracks or holes in an area exposed to windstream or if peeling, tearing, or additional failure of material in flight is probable.
    c. Any damage is located within line of sight or such that will inhibit pilot or CPG from performing his task.
    d. More than 20 percent of total number of fasteners are sheared, pulled-through, or missing.

2. Record damage on DA Form 2408-13-3.
3. Continue evaluating, recording, and labeling damage to other structural members.
4. Perform repair deferrability assessment procedure in accordance with Paragraph 2-38.7.

2-34. EVALUATION OF DAMAGE TO DOORS AND DOOR JAMBS.

2-34.1. Description. The two access doors are hinged at the top. They open outward and upward. The doors are latched and unlatched by handles on the inside and outside of the doors. A hold-open strut is attached to each door. The struts hold the doors in the open position. The struts are released by a handle at the top of each door. The aircraft doors are secondary structures. They are subjected primarily to aerodynamic pressure and handling loads. Function and security are more important than residual strength requirements when assessing door damage.

2-34.2. Damage Evaluation.

1. Classify door or doorjamb as failed if any of the following conditions exist:

    a. Damage to door or door jamb prevents it from being adequately secured to airframe.
    b. Hinges or latches are damaged and in danger of becoming unserviceable in flight.
    c. Door shows signs of severe overstress, such as buckling or misalignment.
    d. There are large cracks or holes in an area exposed to windstream or if peeling, tearing, or additional failure of material in flight is probable.
    e. Fasteners holding major components of door or door jamb together are sheared, pulled through, or missing at three or more adjoining locations.
    f. More than 20 percent of total number of fasteners are damaged.

2. Record damage on DA Form 2408-13-3.
3. Continue evaluating, recording, and labeling damage to other structural members.
4. Perform repair deferrability assessment procedure in accordance with Paragraph 2-38.7.

2-35. EVALUATION OF DAMAGE TO FAIRINGS AND NACELLES.

2-35.1. Description. There are many types of fairings and nacelles in the airframe. Most of the fairings and nacelles are made of light composite materials (Kevlar or fiberglass). Fairings and nacelles are secondary structures. They are subjected primarily to aerodynamic pressure and handling loads. Function and security are more important than residual strength requirements when evaluating damage to fairings and nacelles.

2-35.2. Damage Evaluation.

1. Classify fairing or nacelle as failed if any of the following conditions exist:

    a. Damage to fairing or nacelle or its attaching structure prevents it from being adequately secured to airframe.

b. Fairing or nacelle shows signs of severe overstress such as crushing, buckling, or misalignment.
c. Tracks, rollers, hinges, or latches are damaged and in danger of becoming unserviceable in flight.
d. Fasteners securing fairing or nacelle are sheared, stripped, pulled-through, or missing at three or more adjoining locations.
e. More than 20 percent of total number of fasteners are damaged.
f. There are large cracks or holes in an area of fairing or nacelle exposed to windstream and peeling or tearing of material in flight is probable.

2. Record damage on DA Form 2408-13-3.

3. Continue evaluating, recording, and labeling damage to other structural members.

4. Perform repair deferrability assessment procedure in accordance with Paragraph 2-38.7.

2-36. EVALUATION OF DAMAGE TO FIREWALLS.

2-36.1. Description. Firewalls are located on the upper deck between the two engines. They are stiffened metal panels made from 6 AL-4V titanium alloy and stainless steel. They are supported by a framework of aluminum channels and angles. The firewalls are secondary structures and are lightly loaded. Security and fire integrity are more important than residual static strength when assessing damage.

2-36.2. Damage Evaluation.

1. Classify firewall as failed if any of the following conditions exist:

a. Firewall shows signs of severe overstress such as buckling and misalignment.
b. Fasteners securing firewall to upper deck structure are sheared, stripped, pulled through, or missing at three or more adjoining locations.
c. More than 20 percent of total number of fasteners are damaged.
d. Damage to supporting framework causes firewalls to be loose and subject to collapsing in flight.
e. There are large holes or cracks in firewall that would prevent firewall from containing a fire.

2. Record damage on DA Form 2408-13-3.

3. Continue evaluating, recording, and labeling damage to other structural members.

4. Perform repair deferrability assessment procedure in accordance with Paragraph 2-38.6.

2-37. EVALUATING THE EFFECT OF STRUCTURAL DAMAGE ON OTHER AIRCRAFT SYSTEMS.

The evaluation standards provided basically concern the air worthiness and mission capability of the airframe. However, every member of the airframe has a structural and/or functional purpose. Even those members which are unessential to air worthiness may have an important function related to integrity and performance of other aircraft systems and components. Some of these effects have been considered and are reflected in the evaluation standards.

The assessor is responsible for working with other specialists to determine if damage to airframe structures will overstress, damage, or degrade the performance of other system components. All of the system hardware near the damage should be evaluated for these possible effects. Among the types of conditions to consider are:

a. Structural movement which might change the location or alignment of a component. Controls and drive shafts will be particularly critical.
b. Structural damage which could affect the security of wire bundles and fluid lines, causing them to vibrate, chafe, and fatigue during flight.
c. Damaged structure which might interfere with the free travel or movement of a system component during operation.
d. If the assessor determines that structural damage will or might create any of the above conditions, classify the structure as failed even if the physical damage is within allowable limits.

SECTION IV. AIRFRAME BATTLE DAMAGE REPAIR DEFERRABILITY ASSESSMENT

2-38. REPAIR DEFERRABILITY ASSESSMENT.

This portion of the manual provides standards for determining if battle damage which exceeds the authorized damage limits can be deferred. Standards are provided for two types of deferment.

2-38.1. Type I - 100 Flight Hour Deferment/Unrestricted Operating Envelope. If the deferability standard is satisfied, the repair of the damage can be deferred. Deferment will be for up to 100 hours of combat service. When repair of damage is deferred, periodic monitoring shall be performed to inspect for damage growth. Structures containing damage shall be inspected after each flight.

2-38.2. Type II One-Time Flight Deferment/Restricted Operating Envelope. A Type II deferment is limited to a one-time flight under a restricted operating envelope. The aircraft must never be allowed to operate with damage exceeding the limits of a Type II deferment.

2-38.2.1. Operating Restrictions. The operating restrictions imposed on a Type II deferment are as follows:

a. One-time emergency flight.

b. Maximum airspeed 100 knots.

c. Maximum vertical load factor (Nz) of 2.0.

d. Maximum of three flight-hours.

e. Gradual pedal movements not to exceed 50 percent of available travel from trim position.

f. Minimum aircraft weights when jacking, hoisting, or towing the aircraft prior to flight.

2-38.3. Independent Assessment. Whenever possible, repair deferability assessments should be conducted independently by two assessors or two assessment teams. Compare the results and reconcile all differences. The assessor is responsible for working with other specialists to verify that deferred repair will not degrade the integrity or functional performance of other aircraft systems. See Paragraph 2-37 for additional guidance.

WARNING

Deferring repair of battle damage to primary airframe structure will lessen the aircrafts ability to withstand further projectile damage. In many cases, it will also decrease its crash survivability. Performing combat missions with unrepaired airframe damage may increase the risk to aircraft and crew if additional damage is suffered.

NOTE

- Never defer battle damage repair except in periods of combat emergency. Only the Commanding Officer may authorize battle damage repair deferment.
- If a damaged section contains previously deferred damage, the old and new damage must be evaluated together.
- Unrepaired holes cut in the aircraft skin for purposes of aircraft inspection must be treated as damage in the assessment.

2-38.4. Definitions.

Airframe structures are grouped into four categories for the purpose of assessing repair deferability.

Category I -	Major framing members and structural fittings
Category II -	Skins and stringers
Category III -	Fixed secondary structures
Category IV -	Removable secondary structures

Category I covers all of the major frames, beams, bulkheads, longerons, and structural fittings in each zone of the airframe. Category II covers the skins and stringers in each zone of the airframe. Category III covers

miscellaneous fixed structures, such as formers, intercostals, and channels. Category IV covers all of the removable secondary structures, such as fairings, nacelles, doors, and panels.

Category II structures (skins and stringers) comprise the outside shell of major airframe sections. The skins are continuous over large areas and the stringers are relatively closely spaced. When the airframe is damaged, the damage will likely include skin and stringer elements. Damage will often exceed the published limits. Many combinations of skin and stringer damage may occur.

Limits are placed on the number of failed skin panels and stringers in zones (or parts of zones) and fuselage bays (Figure 2-25). Limits are also placed on the number of failed structures in adjoining areas.

Do not attempt to assess Category I or Category II structure damage unless the relationships described below are fully understood.

a. Skin Panel - A skin panel is that area of skin bounded by lengthwise framing members (stringers and longerons) above and below. They are also bound by vertical framing members (frames, formers, or bulkheads) fore and aft.

b. Bay - A bay is defined as the structure between frames, formers, or bulkheads. A bay is continuous around the circumference of the airframe. The frame, former, or bulkhead forward of the bay is considered to belong to that bay.

c. Zone - Airframe zones are identified in Paragraph 2-6. The limit placed on damage to a zone applies to that portion of a zone overlapping a bay group (Figure 2-26).

d. Adjacent - Adjacent stringers or skin panels are any two stringers/skin panels side-by-side (above or below, left or right, or diagonally as shown in Figure 2-25). Stringers or skin panels are considered to be adjacent even if they are in different zones.

e. Minimum Separation The minimum separation is the number of serviceable stringers, frame members, or skin panels that must be present between failed stringers, frame members, or skin panels in any direction. Minimum bay separation is number of bays that must be present between two damage areas. Separation is measured horizontally and vertically, not diagonally. The required separation applies to the number of serviceable skin panels, frame members, or stringers between single damage locations or sets of two or more adjoining damage locations. The minimum separation requirement applies even if the failed structures are in different zones or bays (Figure 2-26).

2-38.5. Repair Deferability Assessment Procedure for Category I and II Structures.

This paragraph contains the procedures to determine whether battle damage to Category I and II structures can be deferred for 100 flight-hours, a one-time flight, or must be grounded for repair.

NOTE

- If damage is significant and doubt exists concerning the damage limits, classify the structure as failed.
- Skin, stringer, and frame damage may result in some undamaged elements being classified as failed. Ensure that the combined damage effects have been evaluated in accordance with Paragraph 2-29.
- In some cases, the amount of damage allowed for a particular member may appear small in relation to the damage allowed for other members. These variations are due to differences in the members stress levels and material strengths.
- A separate repair deferrability assessment must be conducted for each of the major airframe zones containing damaged components. To qualify the aircraft for Type I or II deferment, all damaged components in all sections of the airframe must meet the criteria for the deferment.

a. A flow chart of repair deferrability procedures is shown in Figure 2-27. The assessment is conducted on the most critical structures, Categories I and II.

b. An initial assessment is made to determine if the damage qualifies for a Type I deferment. If the damage exceeds that criteria and there is a need to evacuate the aircraft for repair, the assessment is continued to determine if a Type II deferment can be granted. If the damage exceeds the limits of a Type II deferment, the aircraft must be grounded for repair.

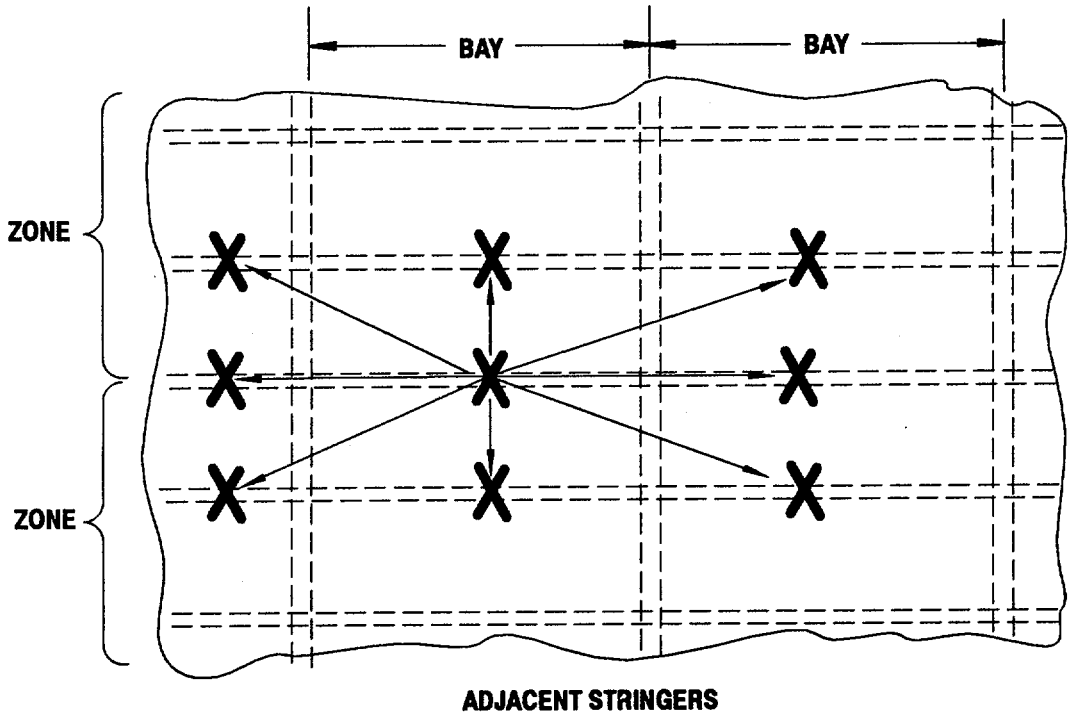

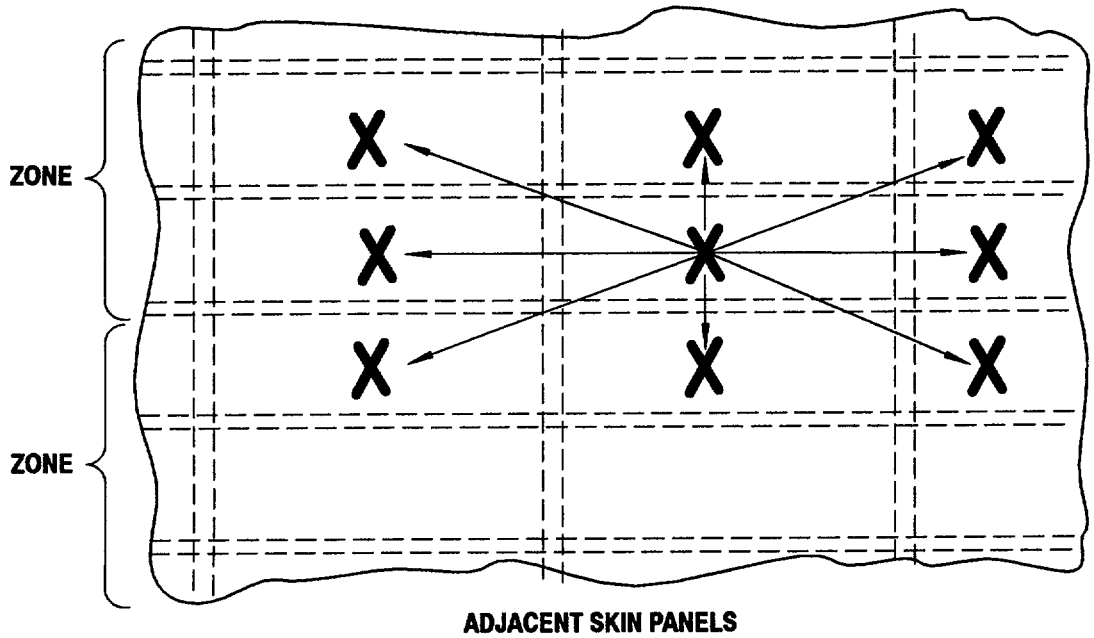

M102-031

Figure 2-25. Skin/Stringer Proximity Relationships

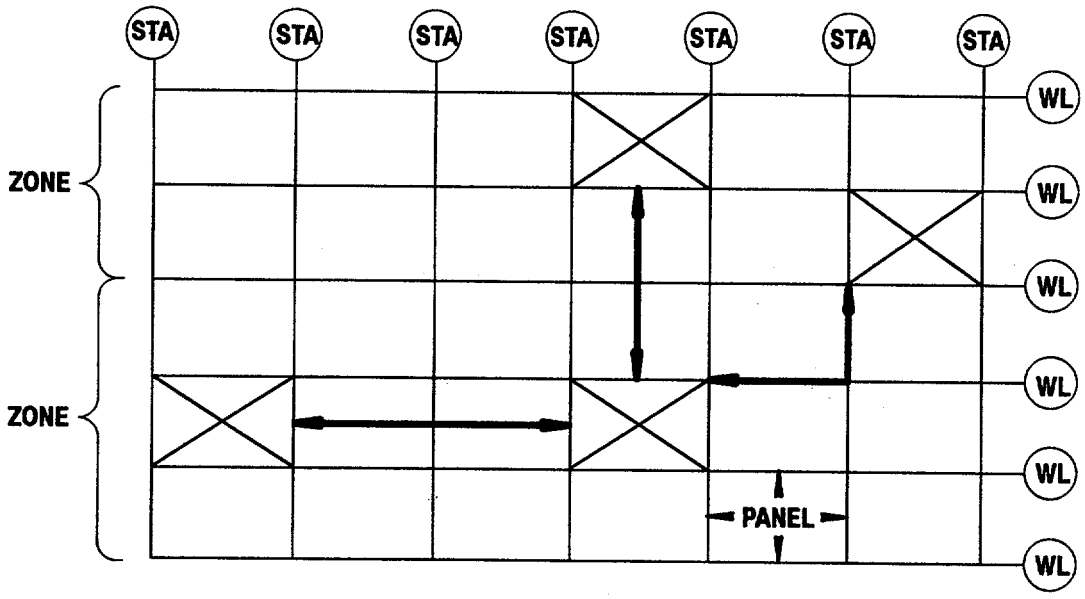

TWO PANEL SEPARATION FOR SKIN PANELS

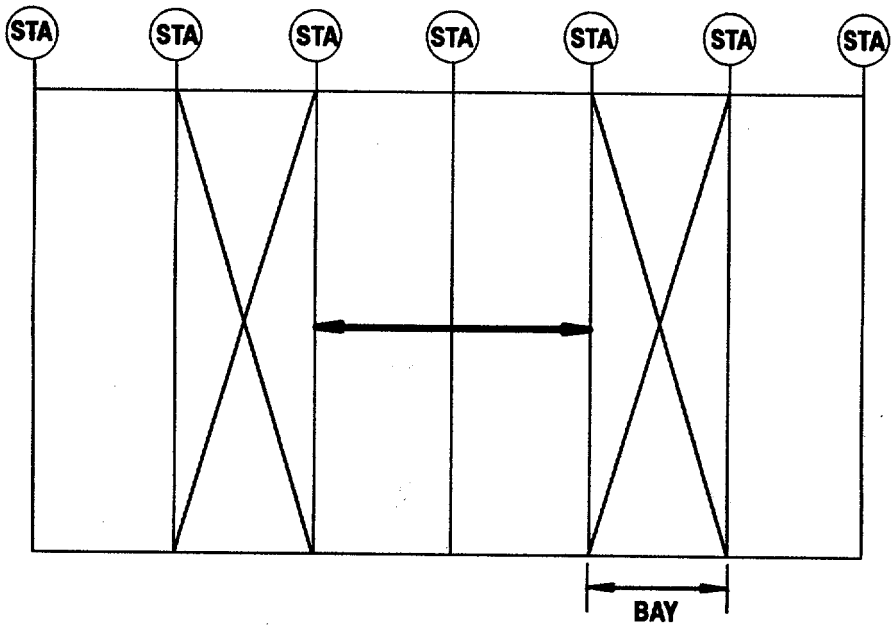

TWO BAY SEPARATION

M102-032

Figure 2-26. Minimum Separation Requirements

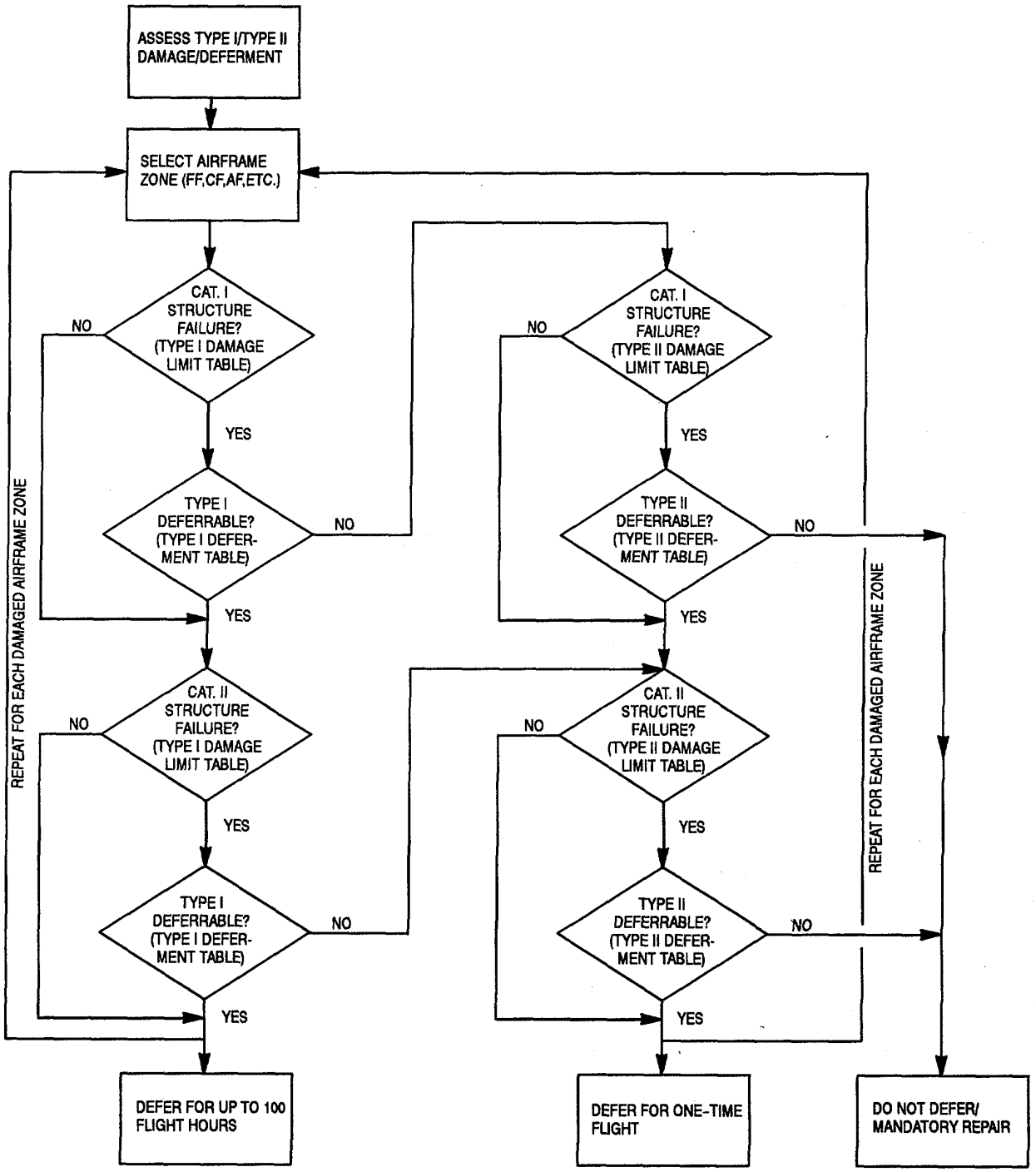

M102-004

Figure 2-27. Repair Deferrability Assessment Logic

c. Review the DA Form 2408-13-3 and assign each failed structure listed on the form to one of the four structure categories. Record the category number on the DA Form 2408-13-3. Begin the assessment with the highest category (lower category number) in which damage has been recorded. Unless otherwise directed, damage in separate zones of the airframe is to be assessed independently.

2-38.5.1. Damage Limit and Deferment Tables.

a. Paragraphs 2-40 and 2-41 contain the Type I and Type II damage limit tables for the tailboom, vertical stabilizer, and horizontal stabilator. These tables list the primary structural members in that section by zone and location. References are made in each table to the evaluation paragraphs and figures which illustrate the location of the airframe member and the various types of damage. Limits in these tables are given using measurements described in the referenced paragraphs and figures.

b. Paragraphs 2-42 and 2-43 contain the Type I and Type II deferment tables for the tailboom, vertical stabilizer, and horizontal stabilator. These tables will be used in conjunction with the damage limit tables to determine repair deferrability for each zone. The maximum number of failures for each location are given in these tables.

c. Use the following procedures to evaluate airframe damage for possible deferment of repairs. Refer to Figure 2-27 which is a flow chart showing the damage assessment procedure for Type I and Type II damage.

2-38.5.2. Assess Type I/Type II Damage/Deferment (Figure 2-27).

1. Select a zone of the airframe to be evaluated (FF, CF, AF, etc). Refer to Paragraph 2-6 for zone identification.
2. Assess Type I damage for Category I structure. Refer to Paragraph 2-40 for the appropriate Type I (Category I) damage limit table. Evaluate the damage and classify the component as failed if the damage limits are exceeded. Record the failed component on DA Form 2408-13-3. Repeat for all other Category I structures within the selected aircraft zone.
3. If there are no Category I structures recorded as failed on DA Form 2408-13-3 for that zone of the airframe, go to step 6. If Category I structure failures exist, go to step 4.
4. Assess Type I deferment for Category I structure. Refer to Paragraph 2-42 for the appropriate Type I (Category I) deferment table to determine if the combination of components classified as failed, from step 2, can be deferred for Type I usage. Defer . ment of Type I damage must follow the rules established in Paragraph 2-38.4 which defines the terminology used in the deferment tables.
5. If the failed component(s) does not qualify for a Type I deferment, go to step 11 to re-evaluate the damage using the Type II damage limits for possible Type II deferment. If the failed component(s) does qualify for a Type I deferment, go to step 6.
6. Assess Type I damage for Category II structure. Refer to Paragraph 2-40 for the appropriate Type I (Category II) damage limit table. Evaluate the damage and classify the component as failed if the damage limits are exceeded. Record the failed component on DA Form 2408-13-3. Repeat for all other Category II structures within the selected aircraft zone.
7. If there are no Category II structures recorded as failed on DA Form 2408-13-3 for that zone of the airframe, go to step 10 for Type I deferment. If Category II structure failures exist, go to step 8.
8. Assess Type I deferment for Category II structure. Refer to Paragraph 2-42 for the appropriate Type I (Category II) deferment table to determine if the combination of components classified as failed, from step 6, can be deferred for Type I usage. Deferment of Type I damage must follow the rules established in Paragraph 2-38.4 which defines the terminology used in the deferment tables.
9. If the damage is beyond the Type I damage limits, go to step 15 to re-evaluate damage based on the Type II damage limits. If damage is within Type I damage limits, go to step 10.
10. Type I (100 flight hour deferment) repair deferment is granted for the evaluated airframe zone. Return to step 1, to assess Type I damage to other airframe zones.
11. Assess Type II damage for Category I structure. Refer to Paragraph 2-41 for the appropriate Type II (Category I) damage limit table. Evaluate the damage and classify the component as failed if the damage limits are exceeded. Record the failed component on DA Form 2408-13-3. Repeat for all other

Category I structures within the selected aircraft zone.

12. If there are no Category I structures recorded as failed on DA Form 2408-13-3 for that zone of the airframe, go to step 15. If Category I structure failures exist, go to step 13.
13. Assess Type II deferment for Category I structure. Refer to Paragraph 2-43 for the appropriate Type II (Category I) deferment table to determine if the combination of components classified as failed, from step 11, can be deferred for Type II usage. Deferment of Type II damage must follow the rules established in Paragraph 2-38.4 which defines the terminology used in the deferment tables.
14. If the failed component(s) does not qualify for a Type II damage deferment, go to step 20. If the failed component(s) does qualify for a Type II deferment, go to step 15.
15. Assess Type II damage for Category II structure. Refer to Paragraph 2-41 for the appropriate Type II (Category II) damage limit table. Evaluate the damage and classify the component as failed if the damage limits are exceeded. Record the failed component on DA Form 2408-13-3. Repeat for all other Category II structures within the selected aircraft zone.
16. If there are no Category II structures recorded as failed on DA Form 2408-13-3 for that zone of the airframe, go to step 19, for Type II deferment. If Category II structure failures exist, go to step 17.
17. Assess Type II deferment for Category II structure. Refer to Paragraph 2-43 for the appropriate Type II (Category II) deferment table to determine if the combination of components classified as failed, from step 15, can be deferred for Type II usage. Deferment of Type II damage must follow the rules established in Paragraph 2-38.4 which defines the terminology used in the deferment tables.
18. If the failed component(s) does not qualify for a Type II damage deferment, go to step 20. If the failed component(s) does qualify for a Type II deferment, go to step 19.
19. Type II (one-time flight deferment) repair deferment is granted for the evaluated airframe zone. Return to step 1, to assess Type I damage to other airframe zones.
20. Do not defer, repair of damage is mandatory.

2-38.6. Repair DeferrabilityAssessment for Category III Structures.

Category III structures include many different secondary structures, such as formers, intercostals, and channels. In most cases, the failure or loss of these structures will affect the security or function of other airframe structures or other aircraft components. They will not have a seriously degrading effect on the strength of the airframe. The number of these items and the possible combinations of damage are so great that it is impractical to treat them individually. The assessor is responsible to determine if the damage or loss of a Category III structure can be safely deferred for either a Type I or Type II deferment.

NOTE

Do not proceed with the assessment if the damage to Category I or II structures is beyond the limits of a Type II deferment; repair is necessary.

If there are no Category III structures classified as failed on the DA Form 2408-13-3, go to Paragraph 2-38.7.

NOTE

If the damage to Category I or II structure is beyond the limits of a Type I deferment, assess Category III structure for a Type II deferment only.

Do not defer repair of a failed Category III structure if any of the following conditions exist:

a. The failed structure causes another airframe structure or another component to be poorly supported or improperly secured.

b. The failed structure will obstruct or interfere with the performance of another component or hinder crew performance.

2-38.7. Repair DeferrabilityAssessment for Category IV Structures.

Category IV includes all of the removable secondary structures. These structures include fairings, nacelles, doors, and panels. When damage exceeds allowable limits, there is a risk that these structures will break apart or tear loose from the aircraft in flight. If the structures or pieces of them come in contact with the rotors or engines, the effect on safety could be critical.

NOTE

If there are no failed Category IV structures listed on the DA Form 2408-13-3 it is unnecessary to perform this task. Do not proceed with the assessment if the damage to Category I, II, or III structures is beyond the limits of a Type II deferment; repair is necessary.

The deferment action in the case of Category IV structures will be to remove them from the aircraft if possible. The aircraft can be safely operated with most of these structures removed. However, the absence of a structure will have varying effects on aircraft reliability, performance, and mission capability. Also removal of a secondary structure may affect aircraft safety (refer to Figure 2-52 for EMI protected doors, panels, and fairing locations). Do not operate aircraft with Category IV structures missing any longer than absolutely necessary.

2-39. DAMAGE MONITORING.

Unrepaired airframe damage may worsen under continued loading. When an aircraft is allowed to return to service with deferred repair of airframe damage, the damage must be carefully monitored. This applies to all unrepaired damage, whether within or outside of the published damaged limits.

Before returning the aircraft to service, carefully mark the boundaries of all unrepaired damage with a grease pencil. Be especially careful to mark the ends of all cracks.

All structures containing damage shall be inspected after each flight. When inspecting the unrepaired damage, carefully look for any growth or enlargement of the damage beyond the original boundaries. Also inspect the structures for any new cracks. If growth is observed, reassess the damage condition.

SECTION V. AIRFRAME BATTLE DAMAGE LIMIT AND DEFERMENT TABLES

2-40. TYPE 1(100 FLIGHT HOURS) DAMAGE LIMIT TABLES.

The following tables give the Type I damage criteria for the tailboom, horizontal stabilator, and vertical stabilizer structural members. The reference paragraphs and figures are listed for each component at the end of each table. Refer to Paragraph 2-38 for repair deferrability assessment procedures. Refer to Figure 2-28 for tailboom sectional zone location. Refer to Figure 2-29 for tailboom frame 530.09 and 547.15 sectional zone location. Refer to Figure 2-30 for horizontal stabilator sectional zone location. Refer to 2-31 for vertical stabilizer sectional zone location.

Table 2-2. Tailboom Frame (Category I) Type I Damage Limits

Frame	Zone	Inner Cap			Outer Cap			Web		
		CD	CL	D	CD	CL	D	WL	D	Total WL
383.3	TB1	0.4	0.8	10x	0.4	0.8	l0x	0.5	5x	1.0
	TB2	0.5	1.0	10x	0.5	1.0	10x	0.5	5x	1.0
	TB3	0.4	0.8	10x	0.5	1.0	10x	0.6	5x	1.0
	TB4	0.4	0.8	10x	0.5	1.0	10x	0.5	5x	1.0
396.6	TB1	0.4	0.8	10x	0.4	0.8	l0x	0.6	5x	1.1
	TB2	0.4	0.8	10x	0.4	0.8	l0x	0.6	5x	1.1
	TB3	0.4	0.8	10x	0.5	1.0	10x	0.6	5x	1.1
	TB4	0.4	0.8	10x	0.5	1.0	10x	0.6	5x	1.1
409.9	TB1	0.4	0.8	10x	0.4	0.8	l0x	0.7	5x	1.3
	TB2	0.4	0.8	10x	0.4	0.8	l0x	0.7	5x	1.3
	TB3	0.2	0.4	10x	0.4	0.8	l0x	0.6	5x	1.2
	TB4	0	0	--	0.4	0.8	l0x	0.6	5x	1.2
423.2	TB1	0.3	0.6	10x	0.3	0.6	10x	0.5	5x	1.0
	TB2	0	0	--	0.4	0.8	l0x	0.5	5x	0.9
	TB3	0.3	0.6	10x	0.4	0.8	l0x	0.5	5x	1.0
	TB4	0	0	--	0.4	0.8	l0x	0.5	5x	1.0

Table 2-2. Tailboom Frame (Category I) Type I Damage Limits - Cont

Frame	Zone		Inner Cap		Outer Cap			Web		
		CD	CL	D	CD	CL	D	WL	D	Total WL
436.5	TB1	0.1	0.2	10x	0	0	--	0.6	5x	1.1
	TB2	0	0	--	0.2	0.4	10x	0.6	5x	1.1
	TB3	0.2	0.4	10x	0.5	1.0	10x	0.7	5x	1.3
	TB4	0	0	--	0.5	1.0	10x	0.7	5x	1.3
450.0	TB1	0.5	1.0	10x	0.6	1.2	10x	1.1	5x	2.1
	TB2	0.5	1.0	10x	0.6	1.2	10x	1.1	5x	2.1
	TB3	0.5	1.0	10x	0.6	1.2	10x	1.1	5x	2.2
	TB4	0.5	1.0	10x	0.6	1.2	10x	1.1	5x	2.2
463.3	TB1	0.4	0.8	10x	0.4	0.8	10x	0.8	5x	1.5
	TB2	0.4	0.8	10x	0.4	0.8	10x	0.8	5x	1.5
	TB3	0.5	1.0	10x	0.5	1.0	10x	0.8	5x	1.6
	TB4	0.5	1.0	10x	0.5	1.0	10x	0.8	5x	1.6
476.6	TB1	0	0	--	0.4	0.8	10x	0.5	5x	1.0
	TB2	0.2	0.4	10x	0.4	0.8	10x	0.5	5x	1.0
	TB3	0.4	0.8	10x	0.5	1.0	10x	0.6	5x	1.1
	TB4	0.4	0.8	10x	0.5	1.0	10x	0.6	5x	1.1
483.0	TB1	0.4	0.8	10x	0.4	0.8	10x	0.6	5x	1.1
	TB2	0.4	0.8	10x	0.4	0.8	10x	0.6	5x	1.1
489.9	TB1	0.3	0.6	10x	0.5	1.0	10x	0.5	5x	1.0
	TB2	0.4	0.8	10x	0.5	1.0	10x	0.6	5x	1.1
	TB3	0.4	0.8	10x	0.4	0.8	10x	0.6	5x	1.1
	TB4	0.4	0.8	10x	0.4	0.8	10x	0.5	5x	1.0
496.0	TB1	0.3	0.6	10x	0.4	0.8	10x	0.5	5x	1.0
	TB2	0.4	0.8	10x	0.4	0.8	10x	0.6	5x	1.1

Table 2-2. Tailboom Frame (Category I) Type I Damage Limits - Cont

Frame	Zone	Inner Cap			Outer Cap			Web		
		CD	CL	D	CD	CL	D	WL	D	Total WL
503.2	TB1	0.3	0.6	10x	0.4	0.8	10x	0.5	5x	1.0
	TB2	0.4	0.8	10x	0.5	1.0	10x	0.6	5x	1.1
	TB3	0.4	0.8	10x	0.5	1.0	10x	0.6	5x	1.1
	TB4	0.4	0.8	10x	0.5	1.0	10x	0.6	5x	1.1
516.5	TB1	0.4	0.8	10x	0.4	0.8	10x	0.5	5x	1.0
	TB2	0.4	0.8	10x	0.4	0.8	10x	0.5	5x	1.0
	TB3	0.3	0.6	10x	0.4	0.8	10x	0.6	5x	1.1
	TB4	0.3	0.6	10x	0.4	0.8	10x	0.5	5x	1.0
523.0	TB1	0.4	0.8	10x	0.5	1.0	10x	0.6	5x	1.1
	TB2	0.4	0.8	10x	0.5	1.0	10x	0.6	5x	1.1
530.09	530-1	0.2	0.4	10x	0.2	0.4	10x	0.2	5x	0.5
	530-2	0.2	0.4	10x	0.2	0.4	10x	0.2	5x	0.5
	530-3	0.2	0.4	10x	0.2	0.4	10x	0.2	5x	0.5
547.15	547-1	0.2	0.4	10x	0.2	0.4	10x	0.2	5x	0.5
	547-2	0.2	0.4	10x	0.2	0.4	10x	0.2	5x	0.5
	547-3	0.2	0.4	10x	0.2	0.4	10x	0.2	5x	0.5

NOTE

Refer to Paragraph 2-23 and Figures 2-14, 2-15, and 2-53.

Table 2-3. Tailboom Stringer (Category II) Type I Damage Limits

Stringer	Zone	Fuselage Station	CD	CL	D
1	TB1	383.3 - 423.2	0.4	0.5	10x
		423.2 - 450.0	0.6	0.7	10x
		450.0 - 547.15	0.6	1.2	10x

Table 2-3. Tailboom Stringer (Category II) Type I Damage Limits - Cont

Stringer	Zone	Fuselage Station	CD	CL	D
2L	TB1	383.3 - 436.5	0.6	1.2	10x
		436.5 - 450.0	0.3	0.6	10x
		450.0 - 463.3	0.6	1.2	10x
		463.3 - 476.6	0	0	--
		476.6 - 503.2	0.1	0.2	10x
		503.2 - 516.5	0	0	--
		516.5 - 530.09	0.1	0.2	10x
		530.09- 547.15	0.3	0.6	10x
2R	TB2	383.3 - 409.9	0.9	1.8	10x
		409.9 - 423.2	0.7	1.4	10x
		423.2 - 436.5	0.5	1.0	10x
		436.5 - 450.0	0.3	0.6	10x
		450.0 - 463.3	0.6	1.2	10x
		463.3 - 476.6	0.9	1.8	10x
		476.6 - 530.09	0.2	0.4	10x
		530.09 - 547.15	0.3	0.6	10x
3L	TB1	383.3 - 450.0	0.2	0.4	10x
		450.0 - 463.3	0.6	1.2	10x
		463.3 - 489.9	0.1	0.2	10x
		489.9 - 503.2	0.2	0.4	10x
		503.2 - 516.5	0.1	0.2	10x
		516.5 - 547.15	0.3	0.6	10x

Table 2-3. Tailboom Stringer (Category II) Type I Damage Limits - Cont

Stringer	Zone	Fuselage Station	CD	CL	D
3R	TB2	383.3 - 463.3	0.5	1.0	10x
		463.3 - 483.3	0.4	0.8	10x
		483.3 - 503.2	0.2	0.4	10x
		503.2 - 516.5	0	0	--
		516.5 - 547.15	0.2	0.4	10x
4L	TB1	383.3 - 409.9	0.2	0.4	10x
		409.9 - 423.2	0.4	0.8	10x
		423.2 - 463.3	0.3	0.6	10x
		463.3 - 547.15	0.2	0.4	10x
4R	TB2	383.3 - 450.0	0.2	0.4	10x
		450.0 - 463.3	0.6	1.2	10x
		463.3 - 516.5	0	0	--
		516.5 - 530.09	0.3	0.4	10x
		530.09 - 547.15	0.4	0.8	10x
5L	TB4	383.3 - 396.6	0.3	0.6	10x
5R	TB3	383.3 - 350.0	0.1	0.2	10x
		350.0 - 396.6	0.2	0.4	10x
6L	TB4	383.3 - 423.2	0.2	0.4	10x
		423.2 - 463.3	0.3	0.6	10x
		463.3 - 547.15	0.2	0.4	10x
6R	TB3	383.3 - 450.0	0.4	0.8	10x
		450.0 - 463.3	0.6	1.2	10x
		463.3 - 547.15	0.4	0.8	10x

Table 2-3. Tailboom Stringer (Category II) Type I Damage Limits - Cont

Stringer	Zone	Fuselage Station	CD	CL	D
7L	TB4	383.3 - 396.6	0.3	0.6	10x
		396.6 - 423.2	0.4	0.8	10x
		423.2 - 436.5	0.6	1.2	10x
		436.5 - 450.0	0.2	0.4	10x
		450.0 - 463.3	0.5	1.0	10x
		463.3 - 547.15	0.3	0.6	10x
7R	TB3	383.3 - 396.6	0.4	0.8	10x
		396.6 - 423.2	0.6	1.2	10x
		423.2 - 436.5	0.9	1.8	10x
		436.5 - 547.15	0.6	1.2	10x
8L	TB4	383.3 - 396.6	0.3	0.6	10x
8R	TB3	383.3 - 396.6	0.4	0.8	10x
9	TB3	383.3 - 396.6	0.3	0.6	10x
		396.6 - 409.9	0.5	1.0	10x
		409.9 - 423.2	0.7	1.4	10x
		423.2 - 436.5	0.8	1.6	10x
		436.5 - 547.15	0.7	1.4	10x
Tail Landing Gear Upper Support	TB1		0.1	0.2	10x

NOTE

Refer to Paragraphs 2-27 and 2-29 and Figures 2-19, 2-21, and 2-53.

Table 2-4. Tailboom Skin (Category II) Type I Damage Limits

Skin Fuselage Station Interval	Zone	WL	D	Total WL
383.3 - 396.6	TB1	1.5	1.5x	3.4
	TB2	0.8	1.5x	1.6
	TB3	0	--	0
	TB4	1.1	1.5x	2.1
396.6 - 409.9	TB1	1.4	1.5x	2.7
	TB2	0.3	1.5x	0.6
	TB3	0	--	0
	TB4	0.8	1.5x	1.6
409.9 - 423.2	TB1	1.2	1.5x	2.4
	TB2	0	--	0
	TB3	1.5	1.5x	3.4
	TB4	1.5	1.5x	4.7
423.2 - 436.5	TB1	1.4	1.5x	2.7
	TB2	0.3	1.5x	0.5
	TB3	1.5	1.5x	1.9
	TB4	1.5	1.5x	3.6
436.5 - 450.0	TB1	1.5	1.5x	3.4
	TB2	0.7	1.5x	1.3
	TB3	0.7	1.5x	1.3
	TB4	1.5	1.5x	3.2
450.0 - 463.3	TB1	0	--	0
	TB2	0	--	0
	TB3	0.7	1.5x	1.3
	TB4	1.5	1.5x	3.4

Table 2-4. Tailboom Skin (Category II) Type I Damage Limits - Cont

Skin Fuselage Station Interval	Zone	WL	D	Total WL
463.3 - 476.6	TB1	1.2	1.5x	2.3
	TB2	0	--	0
	TB3	0.5	1.5x	1.0
	TB4	1.6	1.5x	3.1
476.6 - 489.9	TB1	0	--	0
	TB2	0	--	0
	TB3	0.4	1.5x	0.8
	TB4	1.5	1.5x	2.9
489.9 - 503.2	TB1	0	--	0
	TB2	0	--	0
	TB3	0.4	1.5x	0.8
	TB4	1.5	1.5x	3.0
503.2 - 516.5	TB1	1.3	1.5x	2.6
	TB2	0.1	1.5x	0.2
	TB3	0	--	0
	TB4	1.3	1.5x	2.6
516.5 - 530.09	TB1	0.5	1.5x	0.9
	TB2	0	--	0
	TB3	0	--	0
	TB4	0	--	0
530.09 - 547.15	TB1	0.9	1.5x	1.7
	TB2	0	--	0
	TB3	0	--	0
	TB4	0	--	0

NOTE

Refer to Paragraphs 2-28 and 2-29 and Figures 2-20, 2-21, and 2-54.

Table 2-5. Horizontal Stabilator Spar (Category I) Type I Damage Limits

Location	Zone	Caps			Web		
		CD	CL	D	WL	D	Total WL
Forward Spar	LBL 64.0 - LBL 40.0	0.7	1.4	10x	1.5	5x	5.2
	LBL 40.0 - LBL 21.0	0.9	1.8	10x	1.5	5x	4.7
	LBL 21.0 - LBL 5.668	0.7	1.4	10x	1.5	5x	4.3
	LBL 5.668 - BL 0.0	No Damage Allowed					
	BL 0.0 - RBL 5.668	No Damage Allowed					
	RBL 5.668 - RBL 21.0	0.7	1.4	10x	1.5	5x	4.3
	RBL 21.0 - RBL 40.0	0.9	1.8	10x	1.5	5x	4.7
	RBL 40.0 - RBL 64.0	0.7	1.4	10x	1.5	5x	5.2
Middle Spar	LBL 21.0 - LBL 5.668	0.7	1.4	10x	1.5	5x	5.0
	LBL 5.668 - BL 0.0	No Damage Allowed					
	BL 0.0 - RBL 5.668	No Damage Allowed					
	RBL 5.668 - RBL 21.0	0.7	1.4	10x	1.5	5x	5.0
Aft Spar	LBL 64.0 - LBL 40.0	0.5	1.0	10x	1.5	5x	3.4
	LBL 40.0 - LBL 21.0	0.6	1.2	10x	1.5	5x	3.4
	LBL 21.0 - LBL 5.668	0.5	1.0	10x	1.5	5x	4.0
	LBL 5.668 - BL 0.0	0.5	1.0	10x	1.5	5x	4.3
	BL 0.0 - RBL 5.668	0.5	1.0	10x	1.5	5x	4.3
	RBL 5.668 - RBL 21.0	0.5	1.0	10x	1.5	5x	4.0
	RBL 21.0 - RBL 40.0	0.6	1.2	10x	1.5	5x	3.4
	RBL 40.0 - RBL 64.0	0.5	1.0	10x	1.5	5x	3.4

NOTE

Refer to Paragraph 2-22 and Figures 2-11 and 2-60.

Table 2-6. Horizontal Stabilator Rib (Category I) Type I Damage Limits

Location	Cap			Web		
	CD	CL	D	WL	D	Total WL
LBL 64.0	0.4	0.8	10x	1.5	5x	3.4
LBL 40.0	0.4	0.8	10x	1.5	5x	3.9
LBL 21.0	0.4	0.8	10x	1.5	5x	4.0
LBL 5.668	0.1	0.2	10x	1.5	5x	4.4
LBL 3.310	No Damage Allowed					
RBL 3.080	No Damage Allowed					
RBL 5.668	0.1	0.2	10x	1.5	5x	4.4
RBL 21.0	0.4	0.8	10x	1.5	5x	4.0
RBL 40.0	0.4	0.8	10x	1.5	5x	3.9
RBL 64.0	0.4	0.8	10x	1.5	5x	3.4

NOTE

Refer to Paragraph 2-22 and Figures 2-12, 2-60, and 2-61.

Table 2-7. Horizontal Stabilator Machined Fittings (Category I) Type I Damage Limits

Location	Allowable Damage
Pivot Fittings	No Damage Allowed
Actuator Fitting	No Damage Allowed

NOTE

Refer to Paragraph 2-24 and Figures 2-16, 2-60, and 2-61.

Table 2-8. Horizontal Stabilator Skin (Category II) Type I Damage Limits

Horizontal Stabilator Skin Zone	WL	D	Total WL
ST1	1.5	1.5x	3.0
ST2	1.5	1.5x	6.3

Table 2-8. Horizontal Stabilator Skin (Category II) Type I Damage Limits - Cont

Horizontal Stabilator Skin Zone	WL	D	Total WL
ST3	1.5	1.5x	9.6

NOTE

Refer to Paragraph 2-28 and Figures 2-20, 2-60, and 2-61.

Table 2-9. Vertical Stabilizer Spar (Category I) Type I Damage Limits

Location	Zone (VTFS)	Cap			Web		
		CD	CL	D	WL	D	Total WL
Forward Spar	111.406 - 105.000	0.7	1.4	10x	1.5	2x	5.8
	105.000 - 96.559	0.7	1.4	10x	1.5	2x	7.6
	96.559 - 85.559	No Damage Allowed					
	85.559 - 75.625	0.7	1.4	10x	1.2	2x	3.7
	75.625 - 64.875	0.7	1.4	10x	1.5	2x	8.0
	64.875 - 54.125	0.7	1.4	10x	1.5	2x	8.6
	54.125 - 43.375	0.7	1.4	10x	1.5	2x	8.7
	43.375 - 32.625	0.6	1.4	10x	1.5	2x	6.0
	32.625 - 21.338	0.3	0.6	10x	1.5	2x	6.6
	21.338 - 11.628	No Damage Allowed					

Table 2-9. Vertical Stabilizer Spar (Category I) Type I Damage Limits - Cont

Location	Zone (VTFS)	Cap			Web		
		CD	CL	D	WL	D	Total WL
Aft Spar	111.406 - 105.000	0.6	1.2	10x	1.5	2x	5.2
	105.000 - 96.559	0.6	1.2	10x	1.5	2x	5.4
	96.559 - 85.559	0.6	1.2	10x	1.5	2x	5.5
	85.559 - 75.625	0.6	1.2	10x	1.5	2x	5.2
	75.625 - 64.875	0.6	1.2	10x	1.5	2x	5.8
	64.875 - 54.125	0.6	1.2	10x	1.5	2x	5.4
	54.125 - 43.375	0.6	1.2	10x	1.5	2x	5.0
	43.375 - 32.625	0.6	1.2	10x	1.5	2x	5.3
	32.625 - 21.338	No Damage Allowed					
	21.338 - 11.442	No Damage Allowed					

NOTE

Refer to Paragraph 2-22 and Figures 2-11 and 2-59.

Table 2-10. Vertical Stabilizer Rib (Category I) Type I Damage Limits

Location	Zone (VTFS)	Cap	Cap	Cap	Web	Web	Web
		CD	CL	D	WL	D	Total WL
Ribs	111.406	0.9	1.8	10x	1.5	2x	5.2
	105.000	0.6	1.2	10x	1.5	2x	5.4
	96.559	0.5	1.0	10x	1.5	2x	5.6
	85.559	0.4	0.8	10x	1.5	2x	5.5
	75.625	0.4	0.8	10x	1.5	2x	5.4
	64.875	0.6	0.8	10x	1.5	2x	5.8
	54.125	0.5	1.0	10x	1.5	2x	6.0
	43.375	0.3	0.6	10x	1.5	2x	6.2
	32.625	1.1	2.2	10x	1.5	2x	6.7
	21.338	0.6	1.2	10x	1.5	2x	6.8
	13.788	0.5	1.0	10x	1.5	2x	6.1

NOTE

Refer to Paragraph 2-22 and Figures 2-12 and 2-59.

Table 2-11. Vertical Stabilizer Machined Fittings (Category I) Type I Damage Limits

Location	Allowable Damage
Tail Rotor Gearbox Brace Rod Attachment Fittings on Forward and Aft Spars	No Damage Allowed

NOTE

Refer to Paragraph 2-24 and Figures 2-16 and 2-59.

Table 2-12. Vertical Stabilizer Skin (Category II) Type I Damage Limits

Location	Zone (VTFS)	Web WL	Web D	Web Total WL
Left Side Skin	111.406 - 105.000	1.5	2x	5.9
	105.000 - 96.559	1.5	2x	8.4
	96.559 - 85.559	1.5	2x	10.5
	85.559 - 75.625	1.5	2x	7.5
	75.625 - 64.875	1.5	2x	10.5
	64.875 - 54.125	1.5	2x	10.2
	54.125 - 43.375	1.5	2x	9.1
	43.375 - 32.625	1.5	2x	6.4
	32.625 - 21.338	1.5	2x	4.5
	21.338 - 13.788	1.5	2x	5.1
Right Side Skin	111.406 - 105.000	1.5	2x	5.8
	105.000 - 96.559	1.5	2x	8.4
	96.559 - 85.559	1.5	2x	10.7
	85.559 - 75.625	1.5	2x	7.7
	75.625 - 64.875	1.5	2x	10.4
	64.875 - 54.125	1.5	2x	10.1
	54.125 - 43.375	1.5	2x	9.5
	43.375 - 32.625	1.5	2x	7.4
	32.625 - 21.338	1.5	2x	5.1
	21.338 - 13.788	1.5	2x	5.5

NOTE

Refer to Paragraph 2-28 and Figures 2-20 and 2-61.

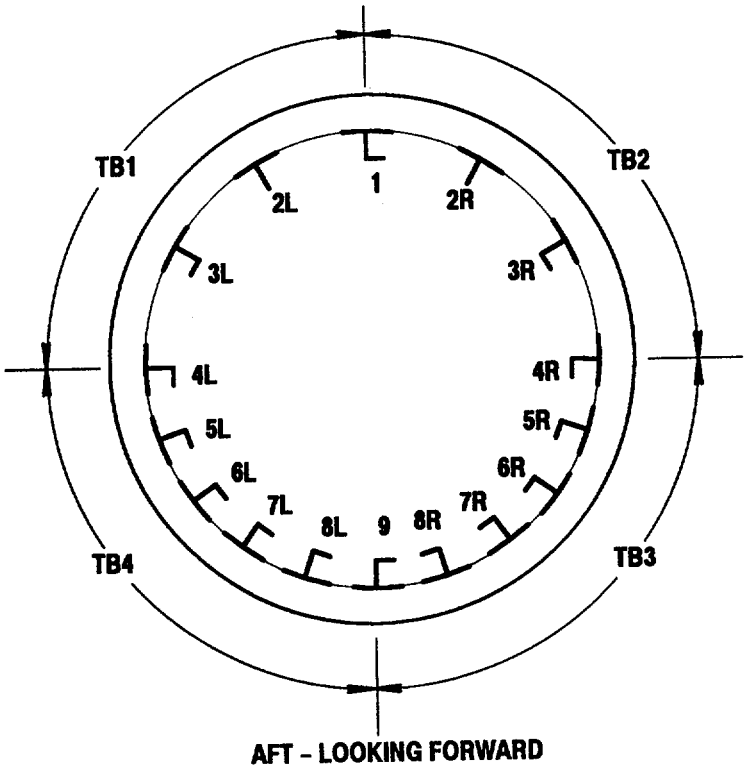

Figure 2-28. Tailboom Sectional Zones

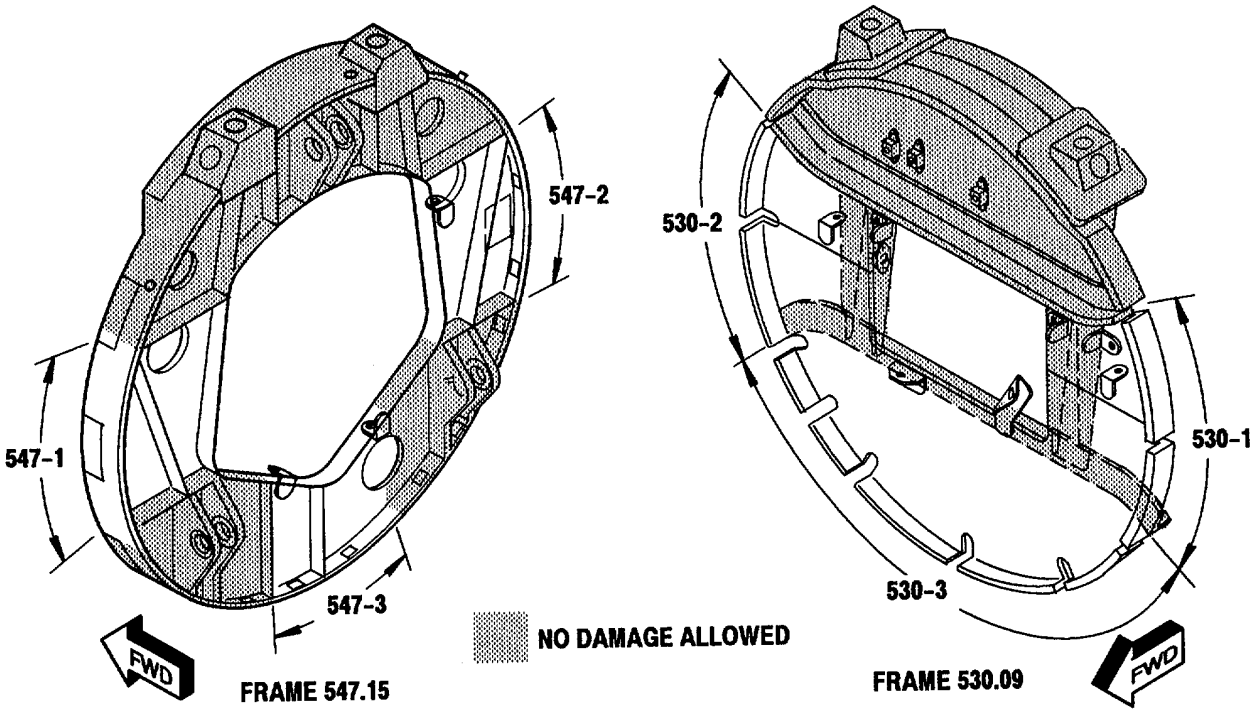

M102-212

Figure 2-29. Tailboom Frames 530.09 and 547.15 Sectional Zones and Critical Damage Areas

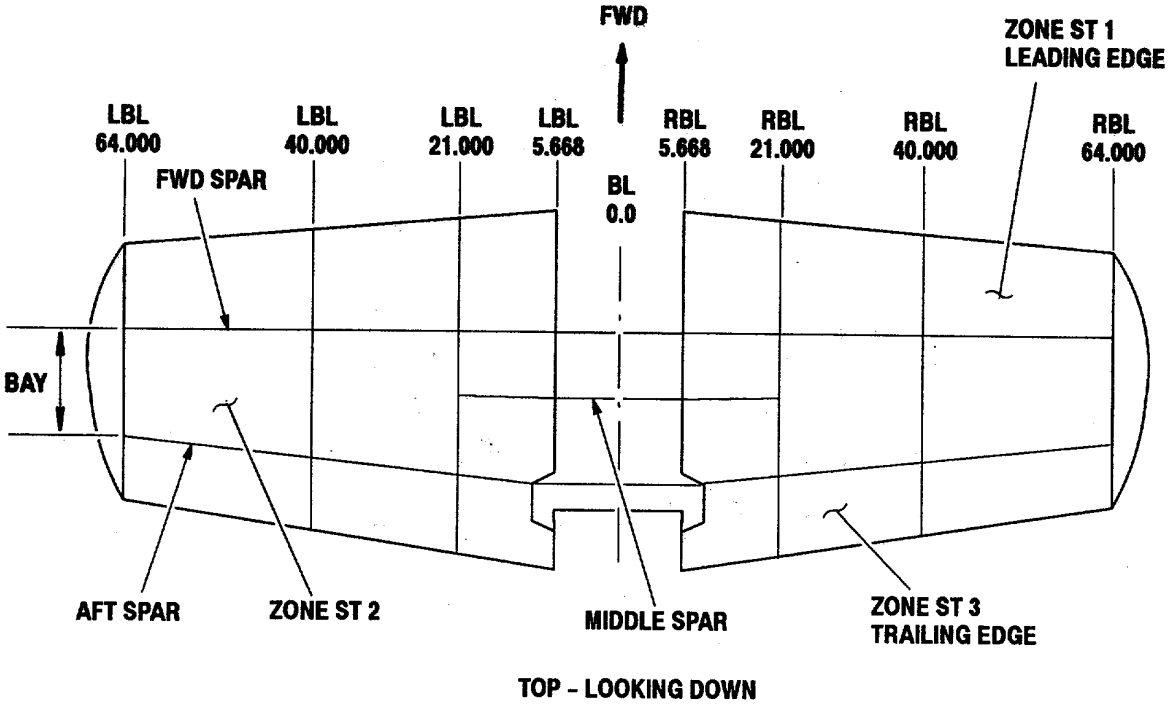

M102-202

Figure 2-30. Horizontal Stabilator Sectional Zones

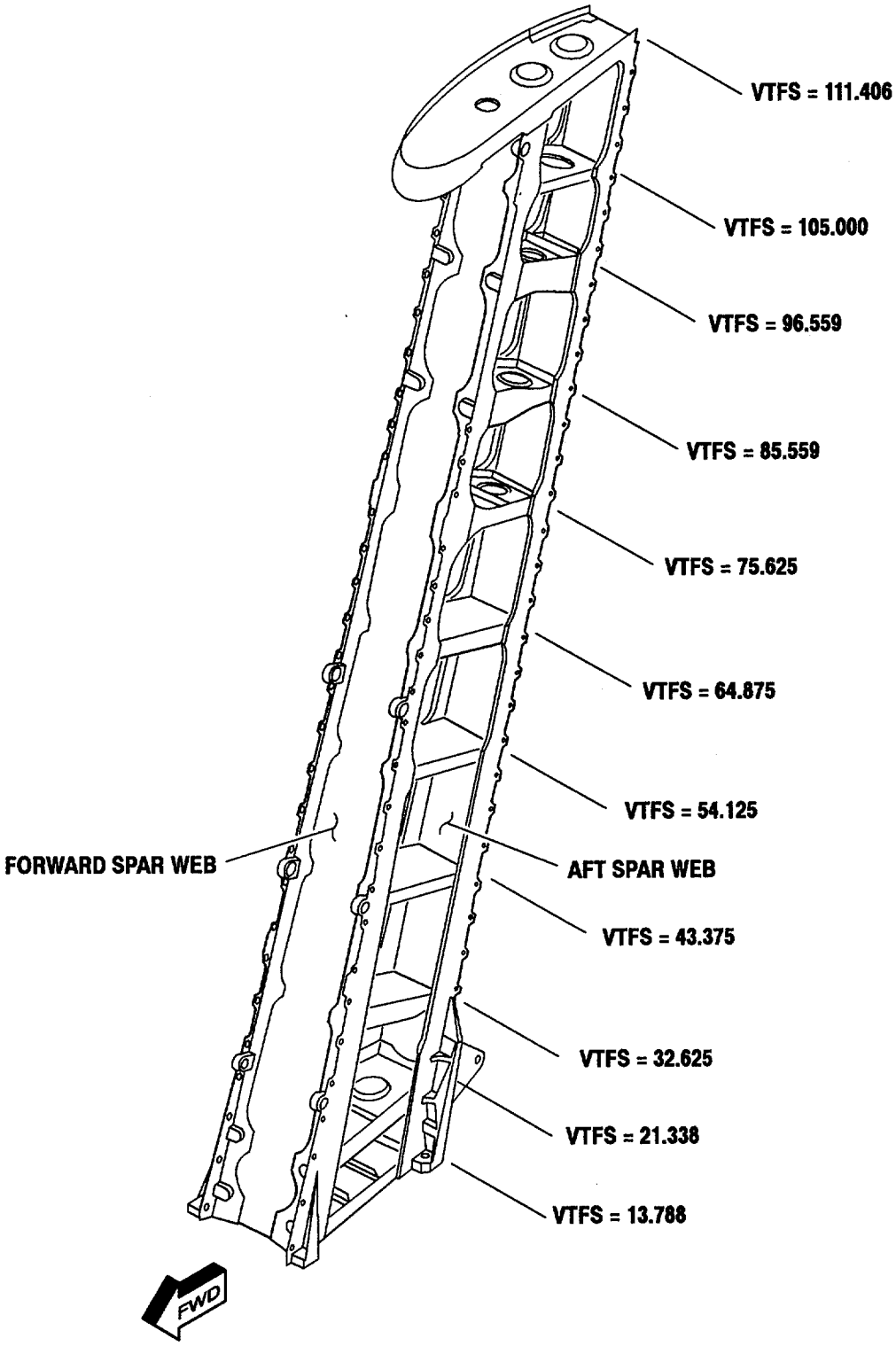

M102-203

Figure 2-31. Vertical Stabilizer Sectional Zones

2-41. TYPE II (ONE-TIME FLIGHT) DAMAGE LIMIT TABLES.

The following tables give the Type II damage criteria for the tailboom, horizontal stabilator, and vertical stabilizer structural members. The reference paragraphs and figures are listed for each component at the end of each table. Refer to Paragraph 2-38 for repair deferrability assessment procedures. Refer to Figure 2-28 for tailboom sectional zone location. Refer to Figure 2-29 for tailboom frame 530.09 and 547.15 sectional zone location. Refer to Figure 2-30 for horizontal stabilator sectional zone location. Refer to Figure 2-31 for vertical stabilizer sectional zone location.

Table 2-13. Tailboom Frame (Category I) Type II Damage Limits

Frame	Zone	Inner Cap			Outer Cap			Web		
		CD	CL	D	CD	CL	D	WL	D	Total WL
383.3	TB1	0.4	0.8	10x	0.5	1.0	10x	0.6	5x	1.1
	TB2	0.5	1.0	10x	0.6	1.2	10x	0.6	5x	1.1
	TB3	0.6	1.2	10x	0.6	1.2	10x	0.6	5x	1.2
	TB4	0.4	0.8	10x	0.5	1.0	10x	0.5	5x	1.0
396.6	TB1	0.5	1.0	10x	0.4	0.8	10x	0.6	5x	1.1
	TB2	0.5	1.0	10x	0.4	0.8	10x	0.6	5x	1.1
	TB3	0.5	1.0	10x	0.6	1.2	10x	0.6	5x	1.2
	TB4	0.5	1.0	10x	0.5	1.0	10x	0.6	5x	1.1
409.9	TB1	0.5	1.0	10x	0.5	1.0	10x	0.7	5x	1.4
	TB2	0.5	1.0	10x	0.5	1.0	10x	0.7	5x	1.4
	TB3	0.5	1.0	10x	0.5	1.0	10x	0.7	5x	1.4
	TB4	0.5	1.0	10x	0.5	1.0	10x	0.7	5x	1.4
423.2	TB1	0.5	1.0	10x	0.5	1.0	10x	0.6	5x	1.1
	TB2	0.5	1.0	10x	0.5	1.0	10x	0.6	5x	1.1
	TB3	0.5	1.0	10x	0.5	1.0	10x	0.6	5x	1.1
	TB4	0.5	1.0	10x	0.5	1.0	10x	0.6	5x	1.1
436.5	TB1	0.4	0.8	10x	0.5	1.0	10x	0.7	5x	1.3
	TB2	0.4	0.8	10x	0.5	1.0	10x	0.7	5x	1.3
	TB3	0.5	1.0	10x	0.6	1.2	10x	0.7	5x	1.3
	TB4	0.5	1.0	10x	0.6	1.2	10x	0.7	5x	1.3

Table 2-13. Tailboom Frame (Category I) Type II Damage Limits - Cont

Frame	Zone	Inner Cap			Outer Cap			Web		
		CD	CL	D	CD	CL	D	WL	D	Total WL
450.0	TB1	0.6	1.0	10x	0.7	1.4	10x	1.1	5x	2.2
	TB2	0.6	1.0	10x	0.7	1.4	10x	1.1	5x	2.2
	TB3	0.7	1.0	10x	0.7	1.4	10x	1.2	5x	2.3
	TB4	0.7	1.0	10x	0.7	1.4	10x	1.1	5x	2.2
463.3	TB1	0.5	1.0	10x	0.5	1.0	10x	0.8	5x	1.6
	TB2	0.5	1.0	10x	0.5	1.0	10x	0.8	5x	1.6
	TB3	0.5	1.0	10x	0.5	1.0	10x	0.8	5x	1.6
	TB4	0.5	1.0	10x	0.5	1.0	10x	0.8	5x	1.6
476.6	TB1	0.4	0.8	10x	0.5	1.0	10x	0.6	5x	1.1
	TB2	0.4	0.8	10x	0.5	1.0	10x	0.6	5x	1.1
	TB3	0.5	1.0	10x	0.5	1.0	10x	0.6	5x	1.1
	TB4	0.5	1.0	10x	0.5	1.0	10x	0.6	5x	1.1
483.0	TB1	0.5	1.0	10x	0.5	1.0	10x	0.6	5x	1.1
	TB2	0.5	1.0	10x	0.5	1.0	10x	0.6	5x	1.1
489.9	TB1	0.5	1.0	10x	0.5	1.0	10x	0.6	5x	1.1
	TB2	0.5	1.0	10x	0.5	1.0	10x	0.6	5x	1.1
	TB3	0.5	1.0	10x	0.5	1.0	10x	0.6	5x	1.1
	TB4	0.5	1.0	10x	0.5	1.0	10x	0.6	5x	1.1
496.0	TB1	0.5	1.0	10x	0.5	1.0	10x	0.6	5x	1.1
	TB2	0.5	1.0	10x	0.5	1.0	10x	0.6	5x	1.1
503.2	TB1	0.5	1.0	10x	0.5	1.0	10x	0.6	5x	1.1
	TB2	0.5	1.0	10x	0.5	1.0	10x	0.6	5x	1.1
	TB3	0.5	1.0	10x	0.5	1.0	10x	0.6	5x	1.1
	TB4	0.5	1.0	10x	0.5	1.0	10x	0.6	5x	1.1

Table 2-13. Tailboom Frame (Category I) Type II Damage Limits - Cont

Frame	Zone	Inner Cap			Outer Cap			Web		
		CD	CL	D	CD	CL	D	WL	D	Total WL
516.5	TB1	0.5	1.0	10x	0.5	1.0	10x	0.6	5x	1.1
	TB2	0.5	1.0	10x	0.5	1.0	10x	0.6	5x	1.1
	TB3	0.5	1.0	10x	0.45	1.0	10x	0.6	5x	1.1
	TB4	0.5	1.0	10x	0.5	1.0	10x	0.6	5x	1.1
523.0	TB1	0.5	1.0	10x	0.5	1.0	10x	0.6	5x	1.1
	TB2	0.5	1.0	10x	0.5	1.0	10x	0.6	5x	1.1
530.09	530-1	0.3	0.6	10x	0.3	0.6	10x	0.3	5x	0.6
	530-2	0.3	0.6	10x	0.3	0.6	10x	0.3	5x	0.6
	530-3	0.3	0.6	10x	0.3	0.6	10x	0.3	5x	0.6
547.15	547-1	0.3	0.6	10x	0.3	0.6	10x	0.3	5x	0.6
	547-2	0.3	0.6	10x	0.3	0.6	10x	0.3	5x	0.6
	547-3	0.3	0.6	10x	0.3	0.6	10x	0.3	5x	0.6

NOTE

Refer to Paragraph 2-23 and Figures 2-14, 2-15, and 2-53.

Table 2-14. Tailboom Stringer (Category II) Type II Damage Limits

Stringer	Zone	Fuselage Station	CD	CL	D
1	TB1	383.3 - 423.2	0.4	0.5	10x
		423.2 - 450.0	0.6	0.7	10x
		450.0 - 547.15	0.6	1.2	10x
2L	TB1	383.3 - 463.3	0.6	1.2	10x
		463.3 - 476.6	0	0	10x
		476.6 - 503.2	0.1	0.2	10x
		503.2 - 516.5	0	0	10x
		516.5 - 530.09	0.1	0.2	10x
		530.09 - 547.15	0.3	0.6	10x

Table 2-14. Tailboom Stringer (Category II) Type II Damage Limits - Cont

Stringer	Zone	Fuselage Station	CD	CL	D
2R	TB2	383.3 - 409.9	0.9	1.8	10x
		409.9 - 423.2	0.7	1.4	10x
		423.2 - 476.6	0.9	1.8	10x
		476.6 - 503.2	0.3	0.6	10x
		503.2 - 530.09	0.1	0.2	10x
		530.09 - 547.15	0.3	0.6	10x
3L	TB1	383.3 - 450.0	0.3	0.6	10x
		450.0 - 463.3	0.6	1.2	10x
		463.3 - 516.5	0.3	0.6	10x
		516.5 - 547.15	0.6	1.2	10x
3R	TB2	383.3 - 463.3	0.5	1.0	10x
		463.3 - 483.3	0.4	0.8	10x
		483.3 - 503.2	0.2	0.4	10x
		503.2 - 516.5	0	0	--
		516.5 - 547.15	0.2	0.4	10x
4L	TB1	383.3 - 409.9	0.2	0.4	10x
		409.9 - 423.2	0.4	0.8	10x
		423.2 - 463.3	0.3	0.6	10x
		463.3 - 547.15	0.2	0.4	10x
4R	TB2	383.3 - 450.0	0.3	0.4	10x
		450.0 - 463.3	0.6	1.2	10x
		463.3 - 516.5	0	0	--
		516.5 - 530.09	0.3	0.4	10x
		530.09 - 547.15	0.4	0.8	10x
5L	TB4	383.3 - 396.6	0.3	0.6	10x
5R	TB3	383.3 - 396.6	0.2	0.4	10x

Table 2-14. Tailboom Stringer (Category II) Type II Damage Limits - Cont

Stringer	Zone	Fuselage Station	CD	CL	D
6L	TB4	383.3 - 423.2	0.2	0.4	10x
		423.2 - 463.3	0.3	0.6	10x
		463.3 - 547.15	0.2	0.4	10x
6R	TB3	383.38 - 396.6	0.4	0.8	10x
		396.6 - 463.3	0.6	1.2	10x
		463.3 - 547.15	0.5	1.0	10x
7L	TB4	383.3 - 396.6	0.3	0.6	10x
		396.6 - 423.2	0.4	0.8	10x
		423.2 - 436.5	0.6	1.2	10x
		436.5 - 450.0	0.2	0.4	10x
		450.0 - 463.3	0.5	1.0	10x
		463.3 - 547.15	0.3	0.6	10x
7R	TB3	383.3 - 396.6	0.5	1.0	10x
		396.6 - 423.2	0.6	1.2	10x
		423.2 - 436.5	0.9	1.8	10x
		436.5 - 547.15	0.6	1.2	10x
8L	TB4	383.3 - 396.6	0.3	0.6	10x
8R	TB3	383.3 - 396.6	0.4	0.8	10x
9	TB3	383.3 - 396.6	0.3	0.6	10x
		396.6 - 409.9	0.5	1.0	10x
		409.9 - 423.2	0.7	1.4	10x
		423.2 - 436.5	0.8	1.6	10x
		436.5- 547.15	0.7	1.4	10x
Tail Landing Gear Upper Support	TB1		0.1	0.2	10x

NOTE

Refer to Paragraphs 2-27 and 2-29 and Figures 2-19, 2-21, and 2-53.

Table 2-15. Tailboom Skin (Category II) Type II Damage Limits

Skin Fuselage Station Interval	Zone	WL	D	Total WL
383.3 - 396.6	TB1	1.5	1.5x	6.4
	TB2	1.5	1.5x	5.8
	TB3	1.3	1.5x	2.6
	TB4	1.1	1.5x	2.2
396.6 - 409.9	TB1	1.5	1.5x	6.0
	TB2	1.5	1.5x	5.3
	TB3	1.0	1.5x	1.9
	TB4	0.8	1.5x	1.6
409.9 - 423.2	TB1	1.5	1.5x	5.7
	TB2	1.5	1.5x	4.9
	TB3	1.5	1.5x	5.7
	TB4	1.5	1.5x	6.1
423.2 - 436.5	TB1	1.5	1.5x	5.6
	TB2	1.5	1.5x	4.9
	TB3	1.5	1.5x	5.1
	TB4	1.5	1.5x	5.7
436.5 - 450.0	TB1	1.5	1.5x	5.1
	TB2	1.5	1.5x	4.9
	TB3	1.5	1.5x	5.0
	TB4	1.5	1.5x	5.6
450.0 - 463.3	TB1	1.5	1.5x	3.1
	TB2	1.5	1.5x	2.0
	TB3	1.5	1.5x	4.5
	TB4	1.5	1.5x	5.3

Table 2-15. Tailboom Skin (Category II) Type II Damage Limits - Cont

Skin Fuselage Station Interval	Zone	WL	D	Total WL
463.3 - 476.6	TB1	1.5	1.5x	5.2
	TB2	1.5	1.5x	4.4
	TB3	1.5	1.5x	4.3
	TB4	1.5	1.5x	4.9
476.6 - 489.9	TB1	1.5	1.5x	3.7
	TB2	1.5	1.5x	3.7
	TB3	1.5	1.5x	4.4
	TB4	1.5	1.5x	5.1
489.9 - 503.2	TB1	1.5	1.5x	3.8
	TB2	1.5	1.5x	3.8
	TB3	1.5	1.5x	4.2
	TB4	1.5	1.5x	4.6
503.2 - 516.5	TB1	1.5	1.5x	4.9
	TB2	1.5	1.5x	4.1
	TB3	1.5	1.5x	3.6
	TB4	1.5	1.5x	4.6
516.5 - 530.09	TB1	1.5	1.5x	4.2
	TB2	1.5	1.5x	3.6
	TB3	0.6	1.5x	1.1
	TB4	0.6	1.5x	1.1
530.09 - 547.15	TB1	0.9	1.5x	1.7
	TB2	0.8	1.5x	1.5
	TB3	0	--	0
	TB4	0	--	0

NOTE

Refer to Paragraphs 2-28 and 2-29 and Figures 2-20, 2-21, and 2-54.

Table 2-16. Horizontal Stabilator Spar (Category I) Type II Damage Limits

Location	Zone	Caps CD	Caps CL	Caps D	Web WL	Web D	Web Total WL
Forward Spar	LBL 64.0 - LBL 40.0	0.7	1.4	10x	1.5	5x	5.6
	LBL 40.0 - LBL 21.0	0.9	1.8	10x	1.5	5x	6.0
	LBL 21.0 - LBL 5.668	0.7	1.4	10x	1.5	5x	6.3
	LBL 5.668 - BL 0.0	No Damage Allowed					
	BL 0.0 - RBL 5.668	No Damage Allowed					
	RBL 5.668 - RBL 21.0	0.7	1.4	10x	1.5	5x	6.3
	RBL 21.0 - RBL 40.0	0.9	1.8	10x	1.5	5x	6.0
	RBL 40.0 - RBL 64.0	0.7	1.4	10x	1.5	5x	5.6
Middle Spar	LBL 21.0 - LBL 5.668	0.7	1.4	10x	1.5	5x	6.0
	LBL 5.668 - BL 0.0	No Damage Allowed					
	BL 0.0 - RBL 5.668	No Damage Allowed					
	RBL 5.668 - RBL 21.0	0.7	1.4	10x	1.5	5x	6.0
Aft Spar	LBL 64.0 - LBL 40.0	0.5	1.0	10x	1.5	5x	3.5
	LBL 40.0 - LBL 21.0	0.6	1.2	10x	1.5	5x	3.8
	LBL 21.0 - LBL 5.668	0.5	1.0	10x	1.5	5x	4.2
	LBL 5.668 - BL 0.0	0.5	1.0	10x	1.5	5x	4.6
	BL 0.0 - RBL 5.668	0.5	1.0	10x	1.5	5x	4.6
	RBL 5.668 - RBL 21.0	0.5	1.0	10x	1.5	5x	4.2
	RBL 21.0 - RBL 40.0	0.6	1.2	10x	1.5	5x	3.8
	RBL 40.0 - RBL 64.0	0.5	1.0	10x	1.5	5x	3.5

NOTE

Refer to Paragraph 2-22 and Figures 2-11 and 2-60.

Table 2-17. Horizontal Stabilator Rib (Category I) Type II Damage Limits

Location	Cap	Cap	Cap	Web	Web	Web
	CD	CL	D	WL	D	Total WL
LBL 64.0	0.5	1.0	10x	1.5	5x	3.5
LBL 40.0	0.5	1.0	10x	1.5	5x	4.0
LBL 21.0	0.5	1.0	10x	1.5	5x	4.2
LBL 5.668	0.3	0.6	10x	1.5	5x	4.6
LBL 3.310	No Damage Allowed					
RBL 3.080	No Damage Allowed					
RBL 5.668	0.3	0.6	10x	1.5	5x	4.6
RBL 21.0	0.5	1.0	10x	1.5	5x	4.2
RBL 40.0	0.5	1.0	10x	1.5	5x	4.0
RBL 64.0	0.5	1.0	10x	1.5	5x	3.5
NOTE Refer to Paragraph 2-22 and Figures 2-12, 2-60, and 2-61.						

Table 2-18. Horizontal Stabilator Machined Fittings (Category I) Type II Damage Limits

Location	Allowable Damage
Pivot Fittings	No Damage Allowed
Actuator Fitting	No Damage Allowed
NOTE Refer to Paragraph 2-24 and Figures 2-16, 2-60, and 2-61.	

Table 2-19. Horizontal Stabilator Skin (Category II) Type II Damage Limits

Horizontal Stabilator Skin Zone	WL	D	Total WL
ST1	1.5	1.5x	3.1
ST2	1.5	1.5x	7.8

Table 2-19. Horizontal Stabilator Skin (Category II) Type II Damage Limits - Cont

Horizontal Stabilator Skin Zone	WL	D	Total WL
ST3	1.5	1.5x	9.7
NOTE Refer to Paragraph 2-28 and Figures 2-20, 2-60, and 2-61.			

Table 2-20. Vertical Stabilizer Spar (Category I) Type II Damage Limits

Location	Zone (VTFS)	Cap	Cap	Cap	Web	Web	Web
		CD	CL	D	WL	D	Total WL
Forward Spar	111.406 - 105.000	0.7	1.4	10x	1.5	2x	5.9
	105.000 - 96.559	0.7	1.4	10x	1.5	2x	7.7
	96.559 - 85.559	No Damage Allowed					
	85.559 - 75.625	0.7	1.4	10x	1.5	2x	4.6
	75.625 - 64.875'	0.7	1.4	10x	1.5	2x	8.2
	64.875 - 54.125	0.7	1.4	10x	1.5	2x	8.6
	54.125 - 43.375	0.7	1.4	10x	1.5	2x	8.8
	43.375 - 32.625	0.7	1.4	10x	1.5	2x	6.5
	32.625 - 21.338	0.4	0.8	10x	1.5	2x	7.0
	21.338 - 11.628	--	--	--	1.5	2x	8.8

Table 2-20. Vertical Stabilizer Spar (Category I) Type II Damage Limits - Cont

Location	Zone (VTFS)	Cap	Cap	Cap	Web	Web	Web
		CD	CL	D	WL	D	Total WL
Aft Spar	111.406 - 105.000	0.6	1.2	10x	1.5	2x	5.2
	105.000 - 96.559	0.6	1.2	10x	1.5	2x	5.4
	96.559 - 85.559	0.6	1.2	10x	1.5	2x	5.5
	85.559 - 75.625	0.6	1.2	10x	1.5	2x	5.4
	75.625 - 64.875	0.6	1.2	10x	1.5	2x	5.9
	64.875 - 54.125	0.6	1.2	10x	1.5	2x	5.4
	54.125 - 43.375	0.6	1.2	10x	1.5	2x	5.1
	43.375 - 32.625	0.6	1.2	10x	1.5	2x	5.2
	32.625 - 21.338	No Damage Allowed					
	21.338 - 11.442	No Damage Allowed					

NOTE

Refer to Paragraph 2-22 and Figures 2-11 and 2-59.

Table 2-21. Vertical Stabilizer Rib (Category I) Type II Damage Limits

Location	Zone (VTFS)	Cap	Cap	Cap	Web	Web	Web
		CD	CL	D	WL	D	Total WL
Ribs	111.406	0.9	1.8	10x	1.5	2x	5.2
	105.000	0.7	1.4	10x	1.5	2x	5.4
	96.559	0.5	1.0	10x	1.5	2x	5.6
	85.559	0.4	0.8	10x	1.5	2x	5.6
	75.625	0.4	0.8	10x	1.5	2x	5.4
	64.875	0.6	1.2	10x	1.5	2x	5.7
	54.125	0.5	1.0	10x	1.5	2x	5.8
	43.375	0.3	0.6	10x	1.5	2x	6.5
	32.625	1.1	2.2	10x	1.5	2x	6.7
	21.338	0.6	1.2	10x	1.5	2x	6.8
	13.788	0.6	1.2	10x	1.5	2x	5.9
NOTE Refer to Paragraph 2-22 and Figures 2-12 and 2-59.							

Table 2-22. Vertical Stabilizer Machined Fittings (Category I) Type II Damage Limits

Location	Allowable Damage
Tail Rotor Gearbox Brace Rod Attachment Fittings on Forward and Aft Spars	No Damage Allowed
NOTE Refer to Paragraph 2-24 and Figures 2-16 and 2-59.	

Table 2-23. Vertical Stabilizer Skin (Category II) Type II Damage Limits

Location	Zone (VTFS)	Web WL	Web D	Web Total WL
Left Side Skin	111.406 - 105.000	1.5	2x	5.9
	105.000 - 96.559	1.5	2x	8.4
	96.559 - 85.559	1.5	2x	10.6
	85.559 - 75.625	1.5	2x	8.0
	75.625 - 64.875	1.5	2x	10.6
	64.875 - 54.125	1.5	2x	10.2
	54.125 - 43.375	1.5	2x	9.4
	43.375 - 32.625	1.5	2x	7.2
	32.625 - 21.338	1.5	2x	5.0
	21.338 - 13.788	1.5	2x	5.5
Right Side Skin	111.406 - 105.000	1.5	2x	5.9
	105.000 - 96.559	1.5	2x	8.5
	96.559 - 85.559	1.5	2x	10.8
	85.559 - 75.625	1.5	2x	8.2
	75.625 - 64.875	1.5	2x	10.5
	64.875 - 54.125	1.5	2x	10.3
	54.125 - 43.375	1.5	2x	9.7
	43.375 - 32.625	1.5	2x	8.1
	32.625 - 21.338	1.5	2x	5.6
	21.338 - 13.788	1.5	2x	5.8

NOTE

Refer to Paragraph 2-28 and Figures 2-20 and 2-61.

2-42. TYPE 1(100 FLIGHT HOURS) DEFERMENT TABLES.

The following tables give the Type I deferment criteria for the tailboom, horizontal stabilator, and vertical stabilizer structural members. Refer to Paragraph 2-38 for repair deferrability assessment procedures.

Table 2-24. Tailboom Frame (Category I) Type I Deferment

Component	Location (F.S.)	Maximum Total Number of Failures	Maximum Failures per Frame	Minimum Bay Separation Between Failures
Frame Caps	383.0 - 523.0 530.08 - 547.15	3 0	1 0	2 --
Frame Webs	383.0 - 523.0 530.08 - 547.15	3 0	1 0	2 --

Table 2-25. Tailboom Stringer and Skin (Category II) Type I Deferment

Component	Location (F.S.)	Maximum Total Number of Failures	Maximum Failures per Bay	Number of Allowable Adjacent Failures	Minimum Panel Separation Between Failures
Stringers	383.0 - 547.15	4	2	1	3
Skin	383.0 - 547.15	6	3	1	3

Table 2-26. Horizontal Stabilator Spars, Ribs, and Machined Fittings (Category I) Type I Deferment

Component	Maximum Total Number of Failures	Number of Allowable Adjacent Failures	Minimum Panel Separation Between Failures
Spar Caps	3	0	2
Spar Webs	3	0	2
Rib Caps	3	0	1
Rib Webs	3	0	1
Machined Fittings	0	--	--

Table 2-27. Horizontal Stabilator Skin (Category II) Type I Deferment

Component	Location	Maximum Total Number of Failures	Number of Allowable Adjacent Failures	Minimum Panel Separation Between Failures
Horizontal Stabilator Skin	Upper Surface Lower Surface	2 2	0 0	2 2

Table 2-28. Vertical Stabilizer Spars, Ribs, and Machined Fittings (Category I) Type I Deferment

Component	Maximum Total Number of Failures	Number of Allowable Adjacent Failures	Minimum Panel Separation Between Failures
Spar Caps	2	0	2
Spar Webs	3	0	2
Rib Caps	3	0	2
Rib Webs	3	0	2
Machined Fittings	0	--	--

Table 2-29. Vertical Stabilizer Skin (Category II) Type I Deferment

Component	Location	Maximum Total Number of Failures	Number of Allowable Adjacent Failures	Minimum Panel Separation Between Failures
Vertical Stabilizer	Left Surface	2	0	2
Skin	Right Surface	2	0	2

2-43. TYPE II (ONE-TIME FLIGHT) DEFERMENT TABLES.

The following tables give the Type II deferment criteria for the tailboom, horizontal stabilator, and vertical stabilizer structural members. Refer to Paragraph 2-38 for repair deferrability assessment procedures.

Table 2-30. Tailboom Frame (Category I) Type II Deferment

Component	Location (F.S.)	Maximum Total Number of Failures	Maximum Failures per Frame	Minimum Bay Separation Between Failures
Frame Caps	383.0 - 523.0 530.08 - 547.15	6 0	1 0	2 --
Frame Webs	383.0 - 523.0 530.08 - 547.15	6 0	1 0	2 --

Table 2-31. Tailboom Stringer and Skin (Category II) Type II Deferment

Component	Location (F.S.)	Maximum Total Number of Failures	Maximum Failures per Bay	Number of Allowable Adjacent Failures	Minimum Panel Separation Between Failures
Stringers	383.0 - 547.15	6	3	1	3
Skin	383.0 - 547.15	8	4	2	3

Table 2-32. Horizontal Stabilator Spars, Ribs, and Machined Fittings (Category I) Type II Deferment

Component	Maximum Total Number of Failures	Number of Allowable Adjacent Failures	Minimum Panel Separation Between Failures
Spar Caps	5	0	2
Spar Webs	5	0	2
Rib Caps	5	0	1
Rib Webs	5	0	1
Machined Fittings	0	--	--

Table 2-33. Horizontal Stabilator Skin (Category II) Type II Deferment

Component	Location	Maximum Total Number of Failures	Number of Allowable Adjacent Failures	Minimum Panel Separation Between Failures
Horizontal	Upper Surface	3	0	2
Stabilator Skin	Lower Surface	3	0	2

Table 2-34. Vertical Stabilizer Spars, Ribs, and Machined Fittings (Category I) Type II Deferment

Component	Maximum Total Number of Failures	Number of Allowable Adjacent Failures	Minimum Panel Separation Between Failures
Spar Caps	3	0	2
Spar Webs	4	1	2
Rib Caps	4	0	2
Rib Webs	4	0	2
Machined Fittings	0	--	--

Table 2-35. Vertical Stabilizer Skin (Category II) Type II Deferment

Component	Location	Maximum Total Number of Failures	Number of Allowable Adjacent Failures	Minimum Panel Separation Between Failures
Vertical Stabilizer	Left Surface	2	1	2
Skin	Right Surface	2	1	2

Section VI. AIRFRAME BATTLE DAMAGE REPAIR

2-44. BDR MATERIALS.

2-44.1. Materials. Battle damage repair may be accomplished with a variety of materials. Airframe structures will be repaired primarily with 2024-T3 and 7075-T6 Al Aly sheet stock, and 7075-T6 Al Aly extrusions. Stainless steel and titanium may be used in limited applications. The repair materials chart (Table 2-36) is a recommended list of materials for the repair concepts presented. However, due to the nature of BDR, every repair is different, requiring different materials and material thicknesses, fasteners, fastener grip lengths, etc. Refer to Paragraph 2-44.2 for acceptable material substitutions.

Table 2-36. Repair Materials Chart

Repair Material	Repair Concept								
	1	2	3	4	5	6	7	8	9
Structural angle (item 3, App C) (0.75 x 0.75 x 0.063 7075-T6)			X		X		X	X	
Structural angle (item 4, App C) (1.5 x 1.5 x 0.125 7075-T6511)			X					X	
Structural angle (item 5, App C) (2 x 2 x 0.250, 7075-T6511)				X					X
Structural channel (item 6, App C) (1 x 2.75 x 0.125 7075-T6511)	X	X							
T-Flange extrusion (item 16, App C) (0.125 flange 7075-T6511)	X	X	X			X			
Sheet metal (item 41, App C) (0.025 2024-T3 sheet stock)					X				
Sheet metal (item 42, App C) (0.032 2024-T3 sheet stock)	X	X		X	X	X			
Sheet metal (item 43, App C) (0.050 2024-T3 sheet stock)				X	X				X
Sheet metal (item 44, App C) (0.063 2024-T3 sheet stock)	X	X	X			X			
Sheet metal (item 45, App C) (0.071 2024-T3 sheet stock)		X				X			
Sheet metal (item 46, App C) (0.090 2024-T3 sheet stock)	X								X
Sheet metal (item 47, App C) (0.190 2024-T3 sheet stock)				X					
Sheet metal (item 48, App C) (0.063 7075-T6 sheet stock)	X		X				X	X	

Table 2-36. Repair Materials Chart - Cont

Repair Material	Repair Concept								
	1	2	3	4	5	6	7	8	9
Sheet metal (item 49, App C) (0.090 7075-T6 sheet stock)			X						
Sheet metal (item 50, App C) (0.125 7075-T6 sheet stock)			X			X	X	X	
Sheet metal (item 51, App C) (0.160 7075-T6 sheet stock)						X			
Sheet metal (item 52, App C) (0.190 7075-T6 sheet stock)			X						

2-44.2. Material Substitutions. When the required repair materials are unavailable, substitutions can often be made. The substitution material must have approximately the same strength and stiffness as the material it replaces or adjustments will be required with regard to material gage. Refer to Appendix E for the metal substitution chart.

2-44.3. Fasteners. Battle damage repairs should be repaired using blind fasteners. Airframe battle damage repair can be accomplished with any type of fastening device which meets the minimum strength, clearance, fit, clamping, and security requirements. The commonly available fasteners and their substitutes, used for repairing airframe battle damage, are listed in Appendix E, Table E-9. The following guidelines should be observed:

a. Any of the blind rivets listed in Appendix E can be substituted for solid aluminum rivets. However, the size and strength requirements must be met.

b. Hi-Loks, Jo-Bolts, and MS90353/MS90354 high-strength fasteners can be substituted for lockbolts where the primary stress is shear loading.

c. Lockbolts and MS90353/MS90354 high-strength fasteners can be substituted for Hi-Loks where the primary stress is shear loading.

d. Monel rivets of the same diameter and head style can be substituted for solid aluminum rivets.

e. Oversize fasteners may be used in place of standard size fasteners of the same type. However, consideration must be given to edge distance requirements.

f. Bolts and self-locking nuts may be used in place of rivets.

2-45. BDR PROCEDURES.

2-45.1. Repair Classification. The repairs described in this manual are generally classified as "expedient" repairs.

2-45.2. Damage Inspection and Cleanup. Begin repair of airframe structures with careful inspection and cleanup of damage. Remove torn and ragged material, smooth holes, radius sharp edges and corners, and stop-drill cracks. These basic measures are required whether a repair is to be made or deferred. Keep the size of cutouts in skin and internal members to the minimum needed to remove the damaged structure. Round, cutouts are preferred. Rectangular and irregular shaped cutouts are acceptable if the corners are rounded.

2-45.3. Repair Part Dimensions. Size repair parts to accommodate the number of fasteners required and to provide proper fastener edge distance and spacing. Repair parts should be at least one gage heavier than the damaged part. Repair parts of regular shape are preferred. Radius all corners. The rounded corners should be at least two times larger than the fastener diameter used.

2-46. EXPEDIENT REPAIR SCHEMES.

The remainder of this chapter illustrates various approaches to expedient repair of the AH-64A airframe structure. The expedient repairs shown in this chapter cover a representative sample of airframe structures and damage conditions. The assessor and repairer are responsible to adapt the repair concepts to other types of structures and damage conditions.

Restrict the repaired aircraft to a Type II deferment if either of the following conditions exist:

a. The damaged structure is one for which no repair deferment is allowed.

b. There is uncertainty about the adequacy of the repair to be made.

NOTE

If damage to the airframe is not completely repaired, conduct a damage assessment in accordance with Paragraph 2-38. Verify that the unrepaired damage is within the allowable damage limits for that structure. Also verify that any damaged elements left unrepaired qualify for a Type I or II deferment.

c. The expedient repair schemes described in the remainder of this Section cover the following types of structure and damage conditions.

Repair Concepts	Para
Repair Concept 1: Semi-Monocoque Structure Involving Damage to Skins And Stringers (Stringer Repaired Externally)	2-47
Repair Concept 2: Semi-Monocoque Structure Involving Damage to Skin, Stringer, and Frame (Frame Repaired with Straight Channel Section, Stringer Repaired Externally)	2-48
Repair Concept 3: Semi-Monocoque Structure Involving Damage to Skin, Stringer, and Frame (Frame Repaired with Thick Aluminum Plate, Stringer Repaired Externally)	2-49
Repair Concept 4: Vertical Spar Involving Damage to Spar Cap and Web	2-50
Repair Concept 5: Stabilator Spar Involving Damage to the Spar Cap and Web	2-51
Repair Concept 6: Forged/Machined Frame Involving Damage to Frame Cap and Web	2-52
Repair Concept 7: Bulkhead Involving Damage to the Web and Support Beam (Repair External)	2-53
Repair Concept 8: Beams Involving Damage to the Web and Outer Cap	2-54
Repair Concept 9: Beams Involving Damage to the Web and Outer Cap (Repair External)	2-55
Electro Magnetic Interference (EMI) Panel Coating	2-56

2-47. REPAIR CONCEPT 1: SEMI-MONOCOQUE STRUCTURE INVOLVING DAMAGE TO SKINS AND STRINGERS (STRINGER REPAIRED EXTERNALLY).

2-47.1. General Information: This type of repair applies to semi-monocoque skin or stringer structures found in the fuselage and tailboom. The case illustrated involves a severed stringer and heavy damage to adjacent skin panels in the tailboom (Figure 2-32). The repair consists of a skin patch and the installation of an external stringer. It would apply to similar structure in other parts of the aircraft and to damage involving multiple stringers and skin panels.

2-47.2. Limitations: Type I deferment after field repair. Inspect repair area after every flight.

2-47.3. Personnel/Time Required:

- 1 person
- 2 hours

2-47.4. Materials/Tools Required:

- Refer to Table 2-36 for structural materials
- Refer to Appendix E, Table E-9 for structural fasteners
- Airframe repairman's tool kit (item 40, App B)
- Blind rivet tool kit (item 41, App B)

2-47.5. Procedural Steps: (Figures 2-32 through 2-35).

1. Remove and smooth sections of aircraft skin and stringer containing damage.

2. Trim skin cutout to expose several inches of undamaged stringer on each side. The stringer may be cut flush with skin cutout if desired (Figure 2-33). Radius corners of cutout.

NOTE

Rule of thumb: repair parts should be at least one gage heavier than original part.

3. Cut and fit skin patch to cutout allowing space for at least two rows of fasteners around repair. Thickness of skin patch to be at least one gage thicker than damaged skin.

4. Pick up existing stringer attachments on each side of patch. If gap exists between stringer and skin patch, fit and install metal shim (up to 0.032 inch thick max) between skin patch and stringer as shown in Figure 2-35.

5. Install skin patch with blind rivets (or equivalent).

6. Make an external stringer using T-flange as shown in Figure 2-33.

7. Install external stringer using blind rivets (or equivalent).

8. Touch up finish as required in accordance with TM 55-1500-345-23.

9. Record BDR action taken. When mission is complete, as soon as practical, repair equipment/system using standard maintenance procedures.

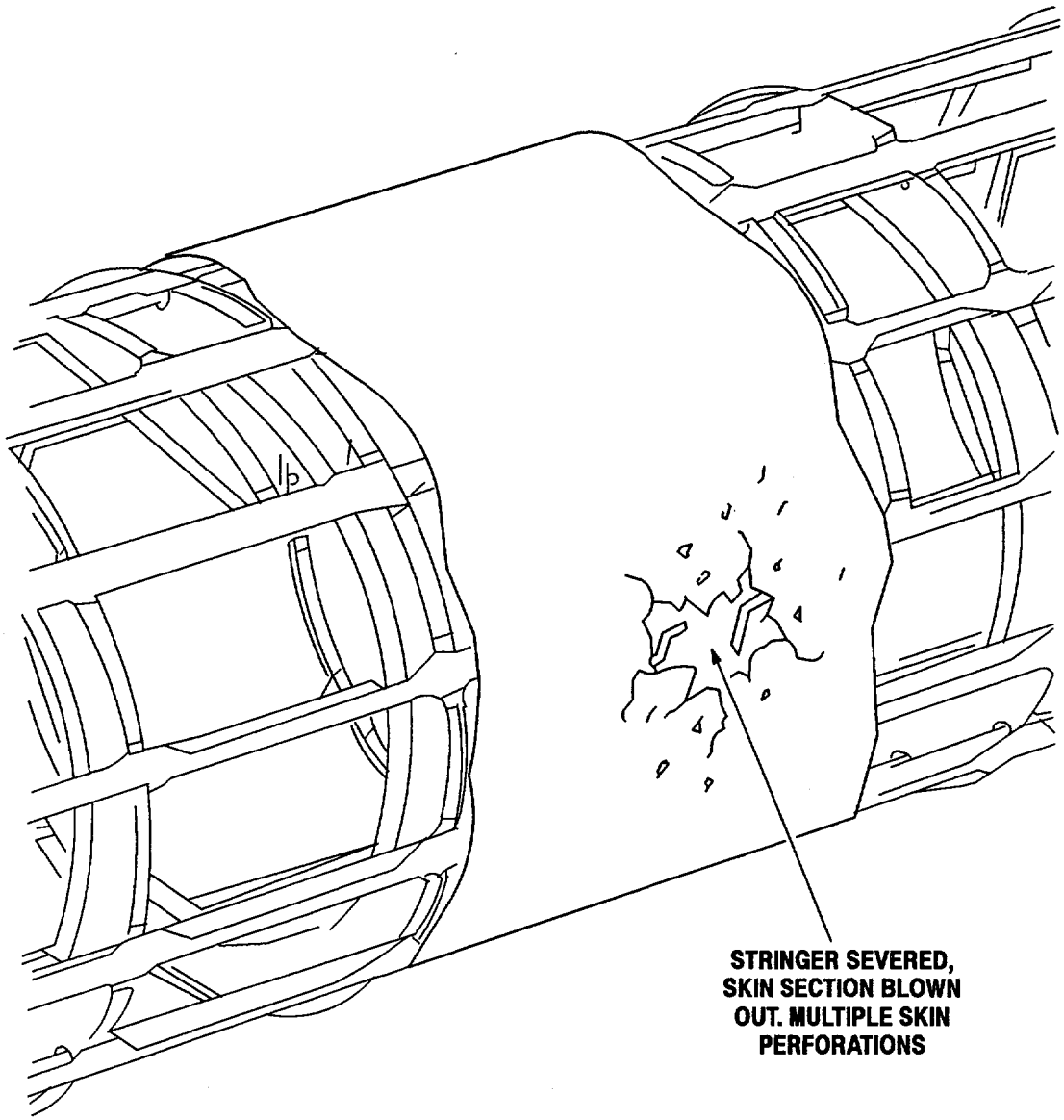

M102-038

Figure 2-32. Repair Concept 1: Damage to Tailboom Skin and Stringer

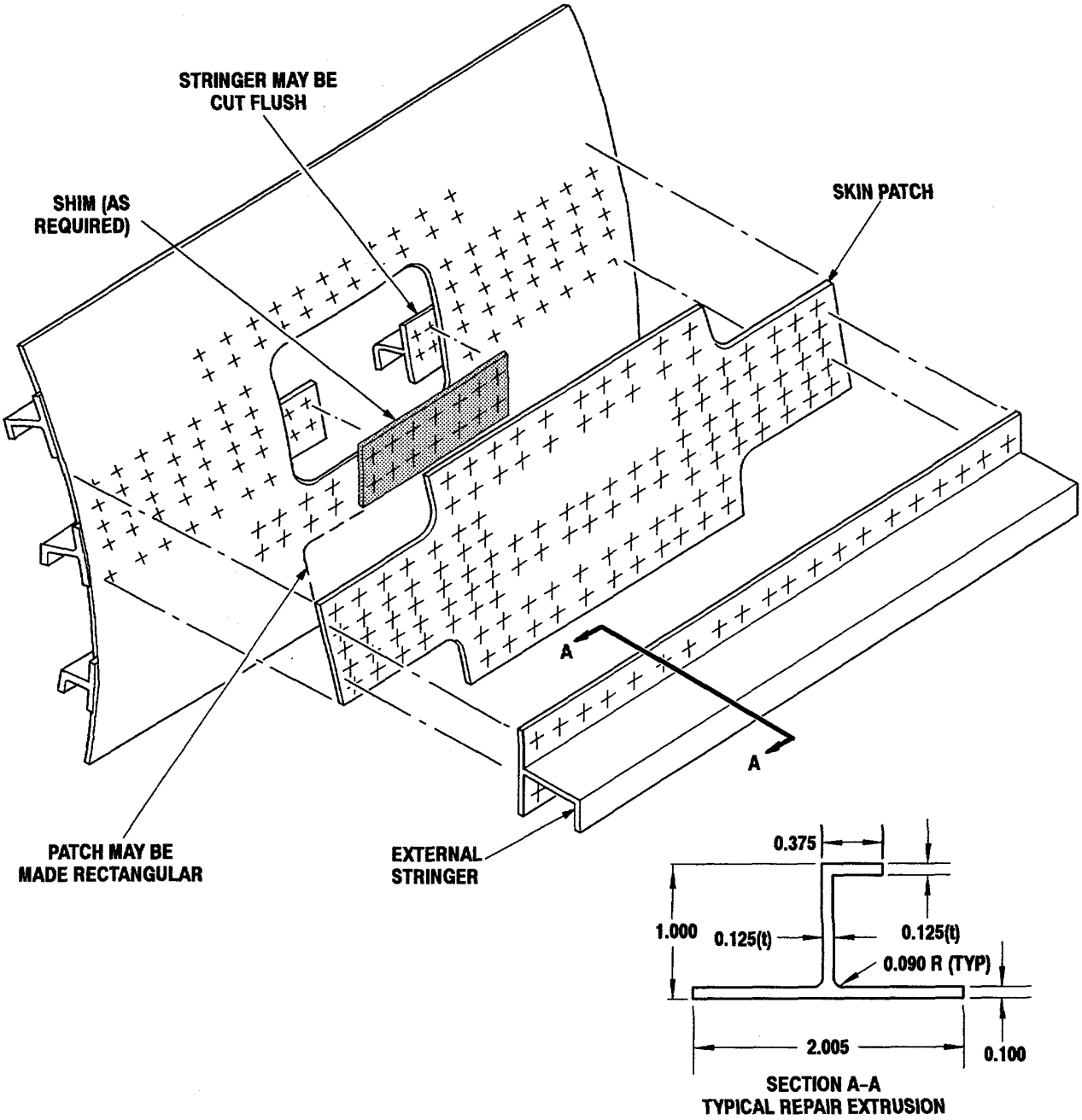

M102-035

Figure 2-33. Repair Concept 1: Overall Configuration

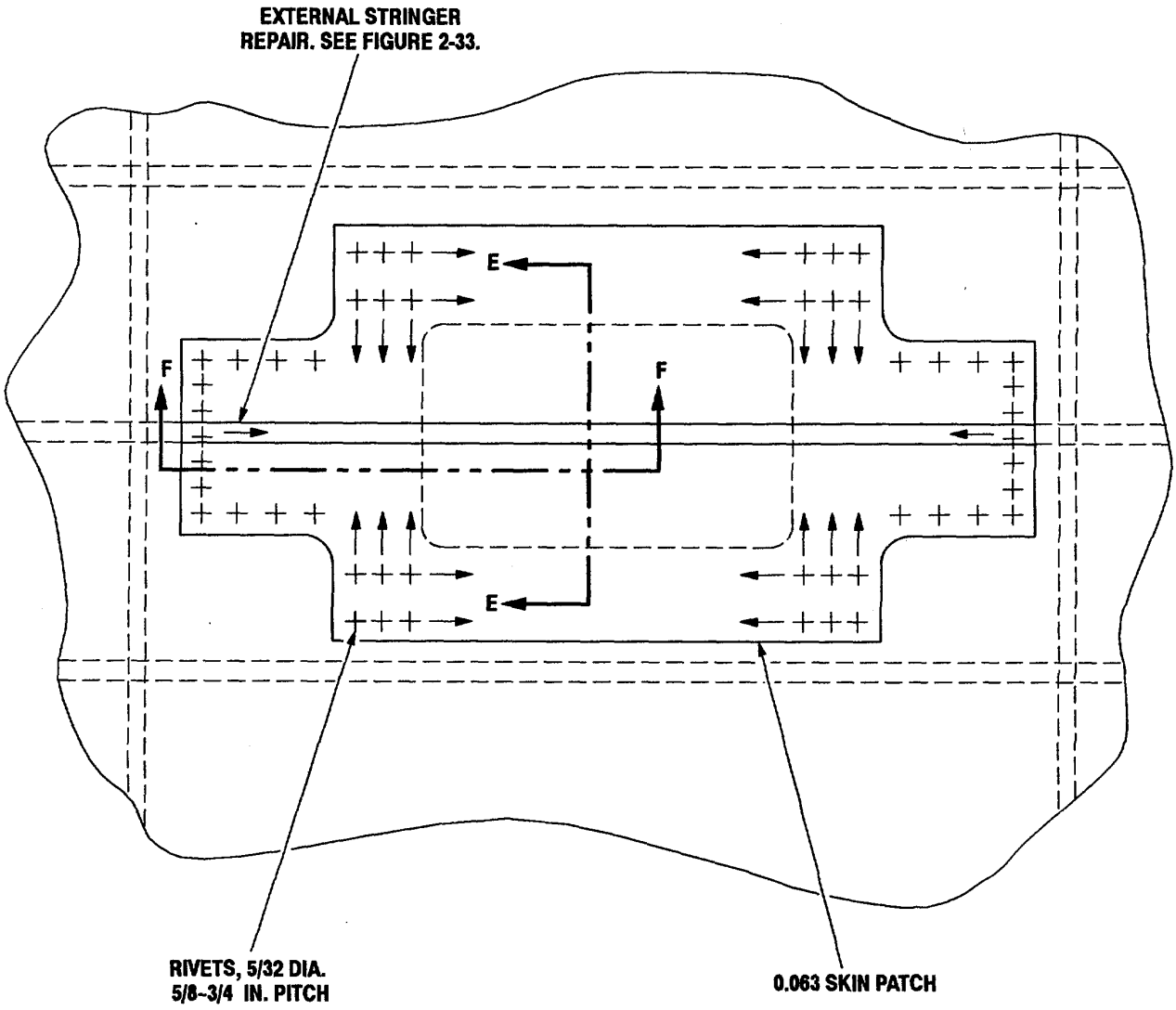

M102-039

Figure 2-34. Repair Concept 1: Planform View

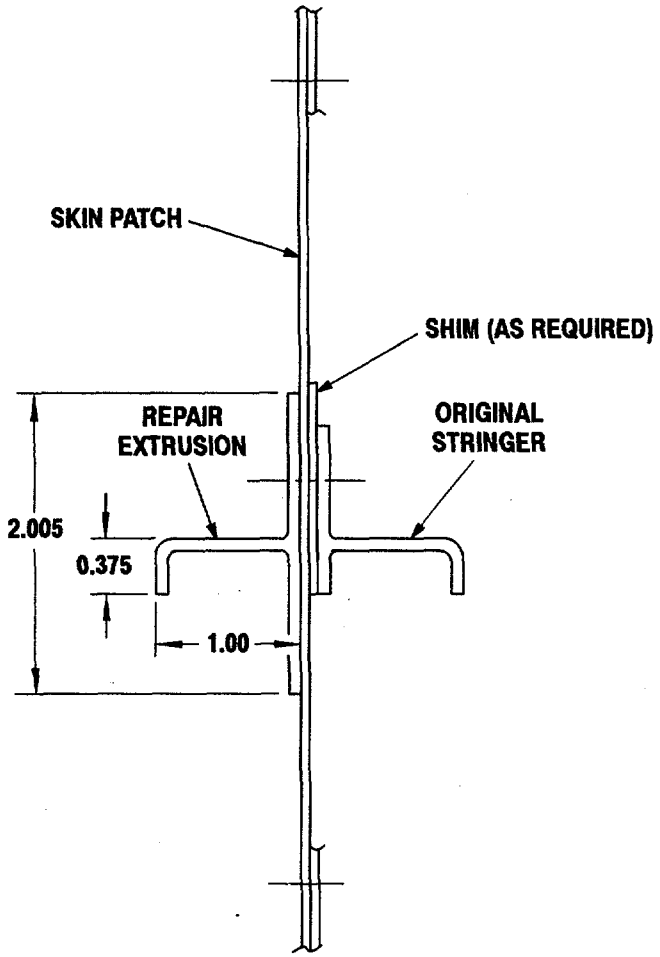

SECTION E-E

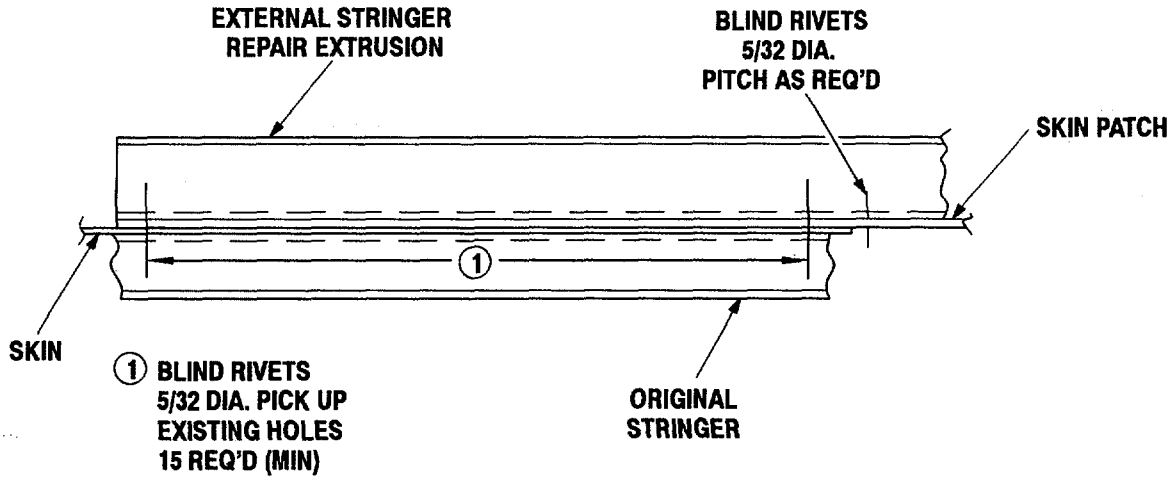

SECTION F-F

M102-040

Figure 2-35. Repair Concept 1: Stringer Repair

2-48. REPAIR CONCEPT 2: SEMI-MONOCOQUE STRUCTURE INVOLVING DAMAGE TO SKIN, STRINGER, AND FRAME (FRAME REPAIRED WITH STRAIGHT CHANNEL SECTION, STRINGER REPAIRED EXTERNALLY).

2-48.1. General Information: This type of repair applies to semi-monocoque skin/stringer/frame structure such as that found in the fuselage and tailboom. The case illustrated involves a severed frame, severed stringer, and major damage to adjacent skin panels in the fuselage. The damaged structure is on the side of the fuselage where the frame section is relatively straight. Use Repair Concept 1 to complete the skin and stringer repair.

2-48.2. Limitations: Type I deferment after field repair. Inspect repair area after every flight.

2-48.3. Personnel/Time Required:
- 1 person
- 2 hours

2-48.4. Materials/Tools Required:
- Refer to Table 2-36 for structural materials
- Refer to Appendix E, Table E-9 for structural fasteners
- Airframe repairman's tool kit (item 40, App B)
- Blind rivet tool kit (item 41, App B)

2-48.5. Procedural Steps: (Figures 2-36 and 2-37).

1. Remove section of skin to provide working access to damaged frame (Figure 2-36). Cut away and smooth damaged sections of stringer and frame. Attempt to leave as much of undamaged stringer as possible. Radius all corners of skin cutouts.

2. Cut section of extruded channel long enough to span removed section of frame and allow installation of required number of fasteners on both sides (Figure 2-37).

3. If an extruded channel section is not available, an alternate built up channel section may be used (Figure 2-37).

4. Install repair channel using blind rivets (or equivalent).

CAUTION

Do not use this repair if frame curvature does not allow channel to be aligned with frame over its entire length. See Repair Concept 3.

5. Repair stringer using repair extrusion outside repair patch as described in Repair Concept 1 and as shown in Figure 2-33.

NOTE

Shims and/or fillers may be equal to original thickness.

6. Touch up finish as required in accordance with TM 55-1500-345-23.

7. Record BDR action taken. When mission is complete, as soon as practical, repair equipment/system using standard maintenance procedures.

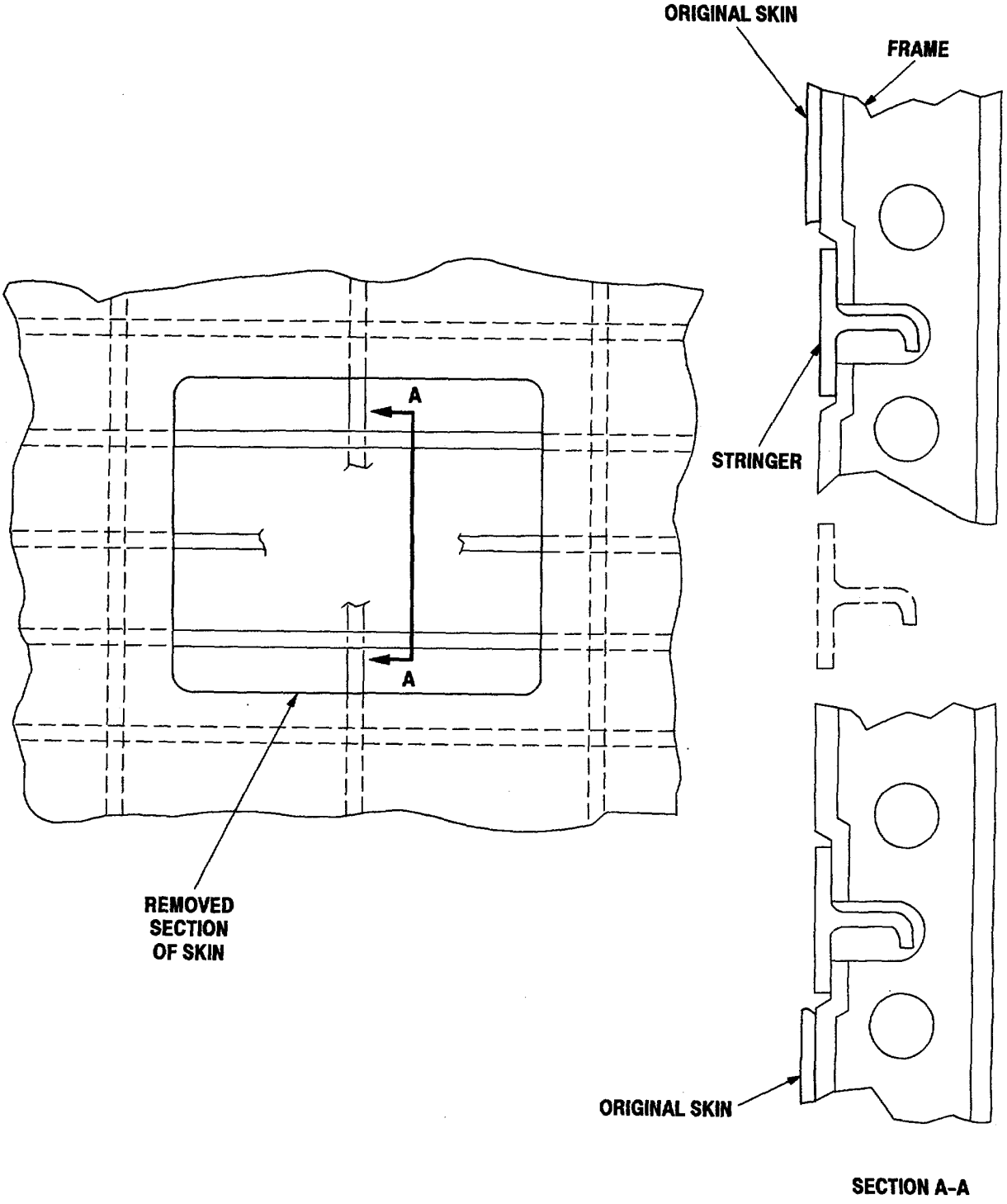

M102-041

Figure 2-36. Repair Concept 2: Skin Cutout

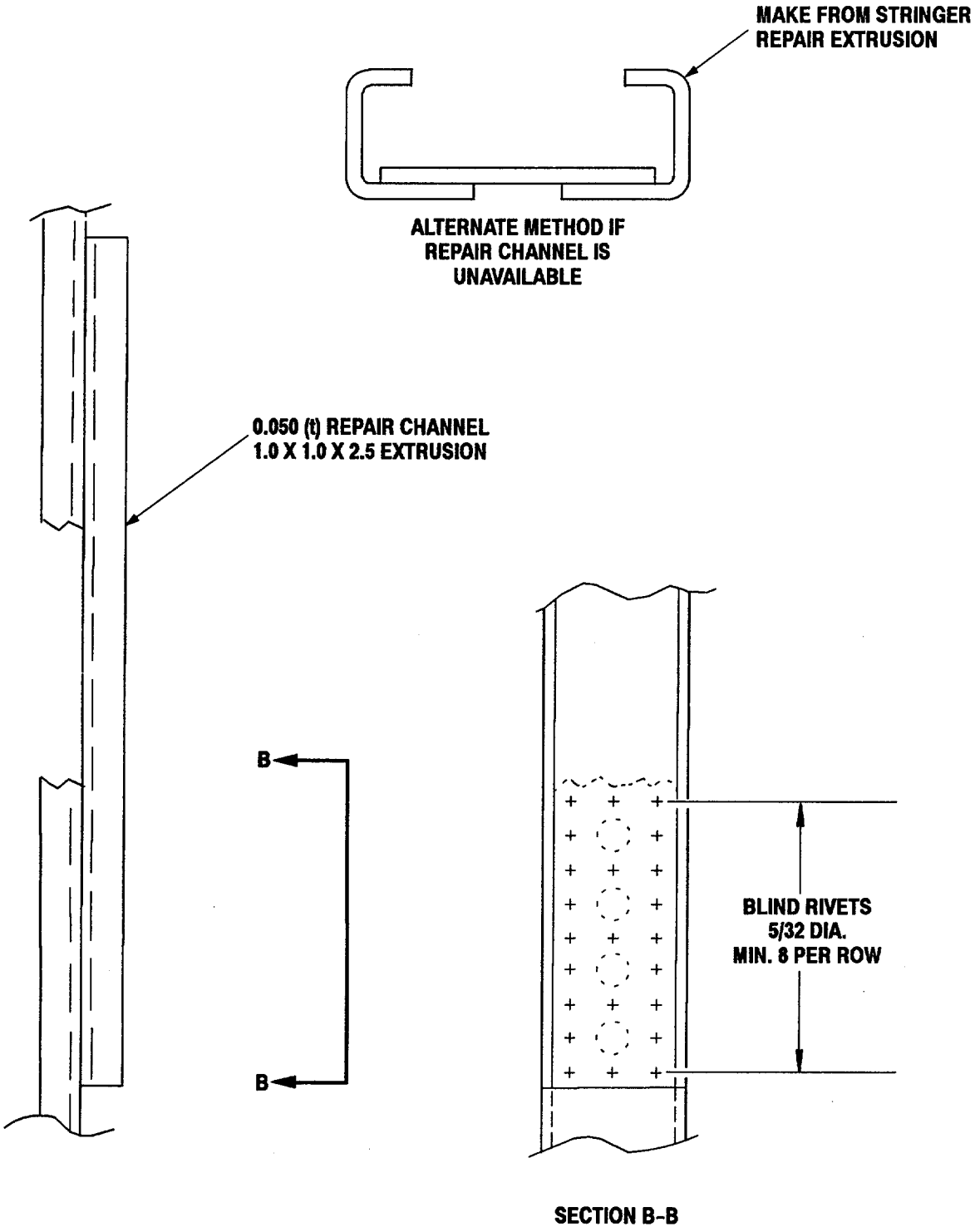

M102-042

Figure 2-37. Repair Concept 2: Frame Repair

2-49. REPAIR CONCEPT 3: SEMI-MONOCOQUE STRUCTURE INVOLVING DAMAGE TO SKIN, STRINGER, AND FRAME (FRAME REPAIRED WITH THICK ALUMINUM PLATE, STRINGER REPAIRED EXTERNALLY).

2-49.1. General Information: This type of repair applies to semi-monocoque skin/stringer/frame structure such as that found in the rear fuselage and tailboom. The two cases illustrated involve a severed frame, severed stringer, and major damage to adjacent skin panels in the tailboom. The repair is designed to be used when damage occurs in the curved section of a frame. In each case, the damaged frame is repaired with a splice section cut from aluminum plate.

2-49.2. Limitations: Type I deferment after field repair. Inspect repair area after every flight.

2-49.3. Personnel/Time Required:

- 1 person
- 3 hours

2-49.4. Materials/Tools Required:

- Refer to Table 2-36 for structural materials
- Refer to Appendix E, Table E-9 for structural fasteners
- Airframe repairman's tool kit (item 40, App B)
- Blind rivet tool kit (item 41, App B)

2-49.5. Procedural Steps: (Figures 2-38 through 2-40).

1. Remove damaged structure as described under Repair Concept 2.
2. For repair of frame: form replacement filler angle from aluminum sheet stock, having same thickness as damaged frame (Figures 2-38 and 2-39).
3. Cut web splice repair plate from aluminum stock to match curvature of frame in repair location. Thickness of splice plate to be two times (2t) the thickness of damaged frame.
4. Make relief cuts into one leg of reinforcing angle extrusion and bend to conform to inboard frame shape.
5. Install repair splice plate and reinforcing angle using blind rivets as shown in Figure 2-39.
6. For repair of frame using external extrusion repair: cut skin repair plate to fit curvature of frame in that location.
7. Cut repair extrusion to same length as skin repair plate.
8. Install repair plate and extrusion using blind rivets as shown in Figure 2-40.
9. Repair stringer and skin as described in Repair Concept 1.
10. Touch up finish as required in accordance with TM 55-1500-345-23.
11. Record BDR action taken. When mission is complete, as soon as practical, repair equipment/system using standard maintenance procedures.

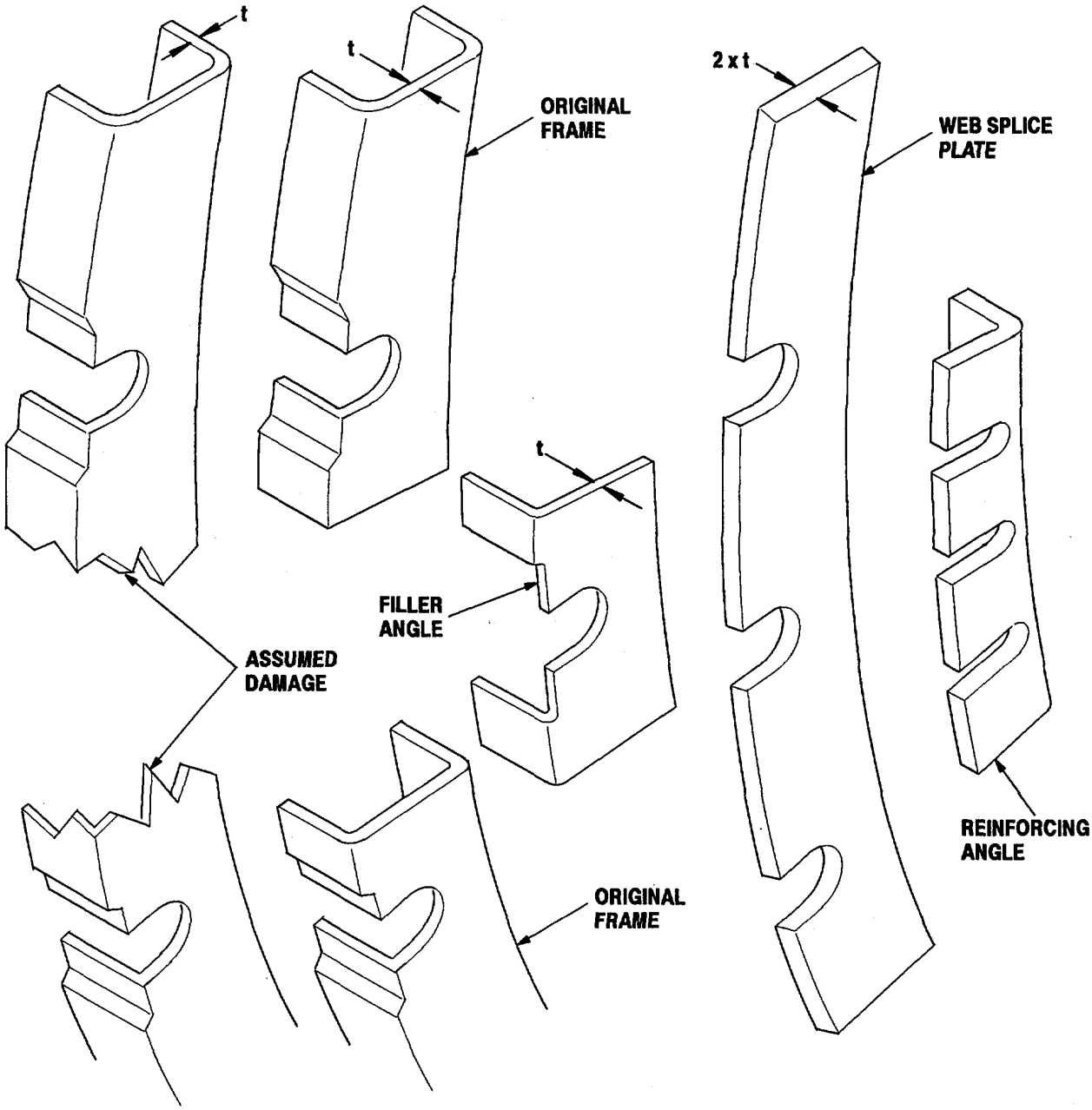

M102-045

Figure 2-38. Repair Concept 3: Frame Isometric Exploded View

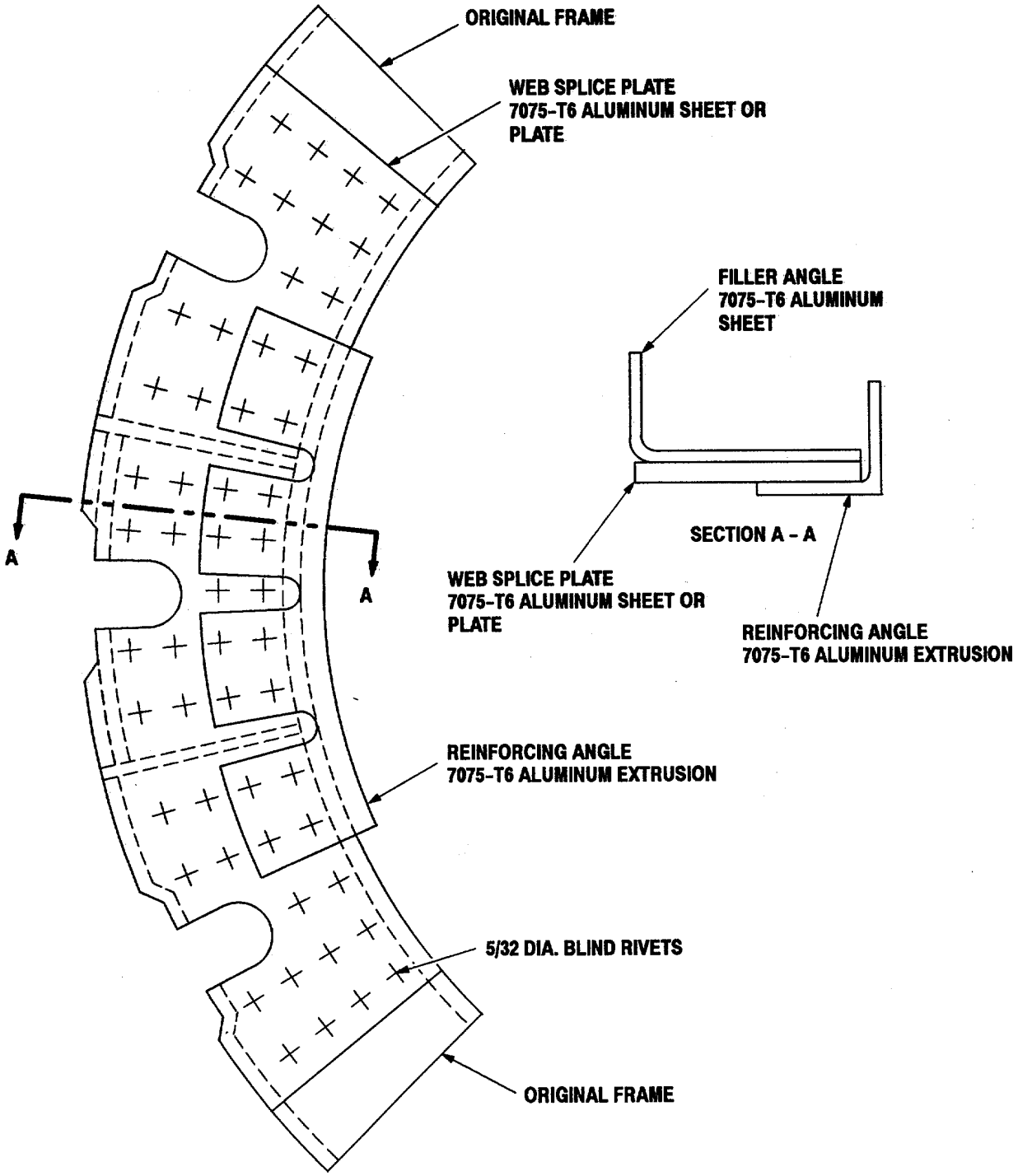

M102-046

Figure 2-39. Repair Concept 3: Frame Repair

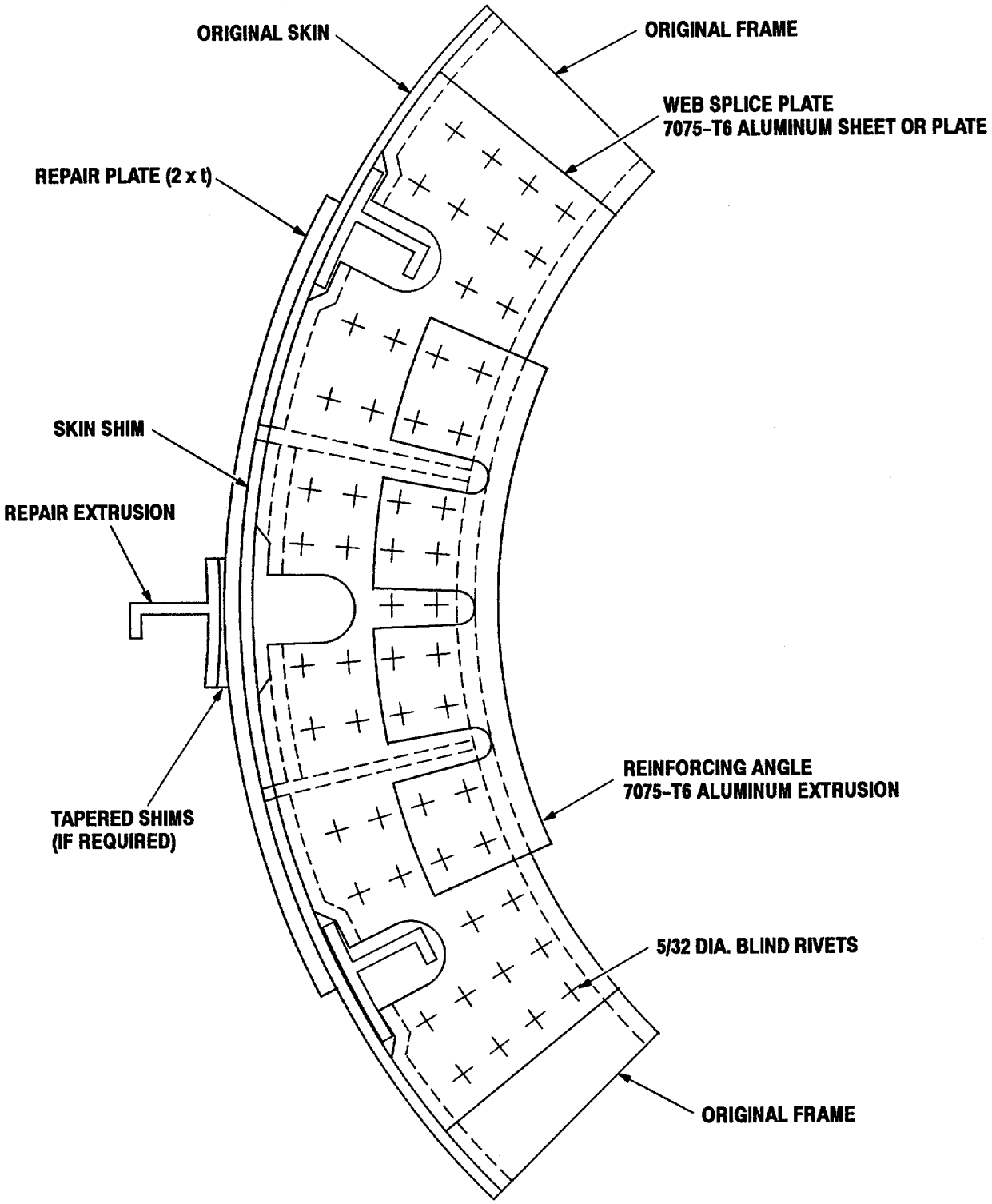

M102-201

Figure 2-40. Repair Concept 3: Skin and Stringer Repair

2-50. REPAIR CONCEPT 4: VERTICAL SPAR INVOLVING DAMAGE TO SPAR CAP AND WEB.

2-50.1. General Information: This repair applies to damage to the built-up sheet metal spars in the vertical stabilizer. The spar is accessible from one side only. The repair consists of restoring the internal spar cap with an angle that is attached outboard of the skin re- pair plate and bridges the gap. Shims and fillers are riveted to the angle to fill in the damaged inboard spar cap and skin areas. Repair fillers and splice plates are used to repair the spar web and upstanding leg of the spar cap.

2-50.2. Limitations: Type I deferment after field repair. Inspect repair area after every flight.

2-50.3. Personnel/Time Required:

- 1 person
- 3 hours

2-50.4. Materials/Tools Required:

- Refer to Table 2-36 for structural materials
- Refer to Appendix E, Table E-9 for structural fasteners
- Airframe repairman's tool kit (item 40, App B)
- Blind rivet tool kit (item 41, App B)

2-50.5. Procedural Steps: (Figures 2-41 through 2-43).

1. Remove damaged material from spar cap and web (Figure 2-41).
2. Repair spar cap using an angle long enough to bridge damaged hole and be retained in place by at least two fasteners on either side of hole.
3. Repair spar web and skin. Insert shims and fillers to restore original thickness.
4. Install repair angle and splice plate using high strength fasteners.
5. Repair skin with external doubler as shown in Figures 2-42 and 2-43.
6. Touch up finish as required in accordance with TM 55-1500-345-23.
7. Record BDR action taken. When mission is complete, as soon as practical, repair equipment/system using standard maintenance procedures.

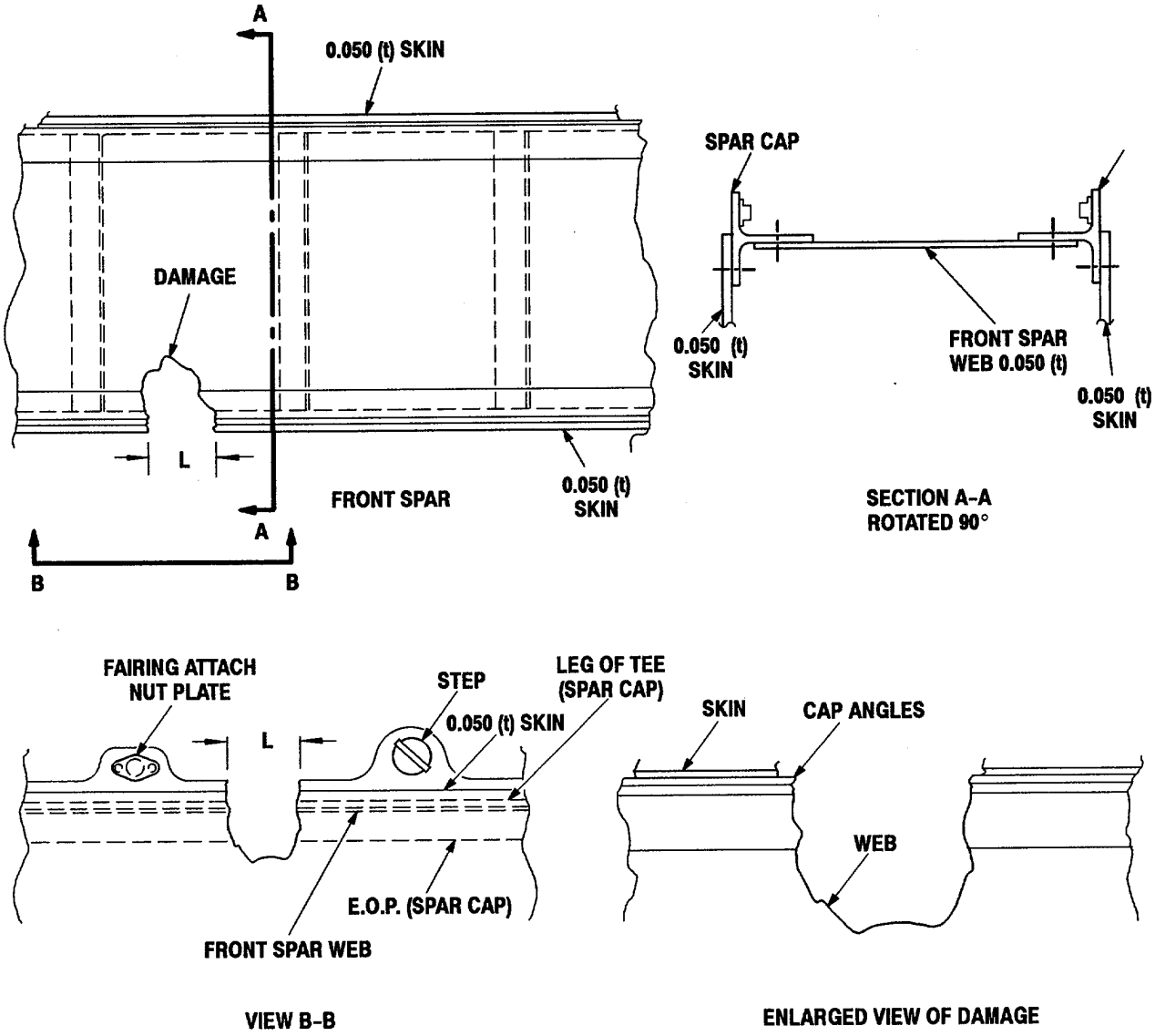

Figure 2-41. Repair Concept 4: Damage to Vertical Spar

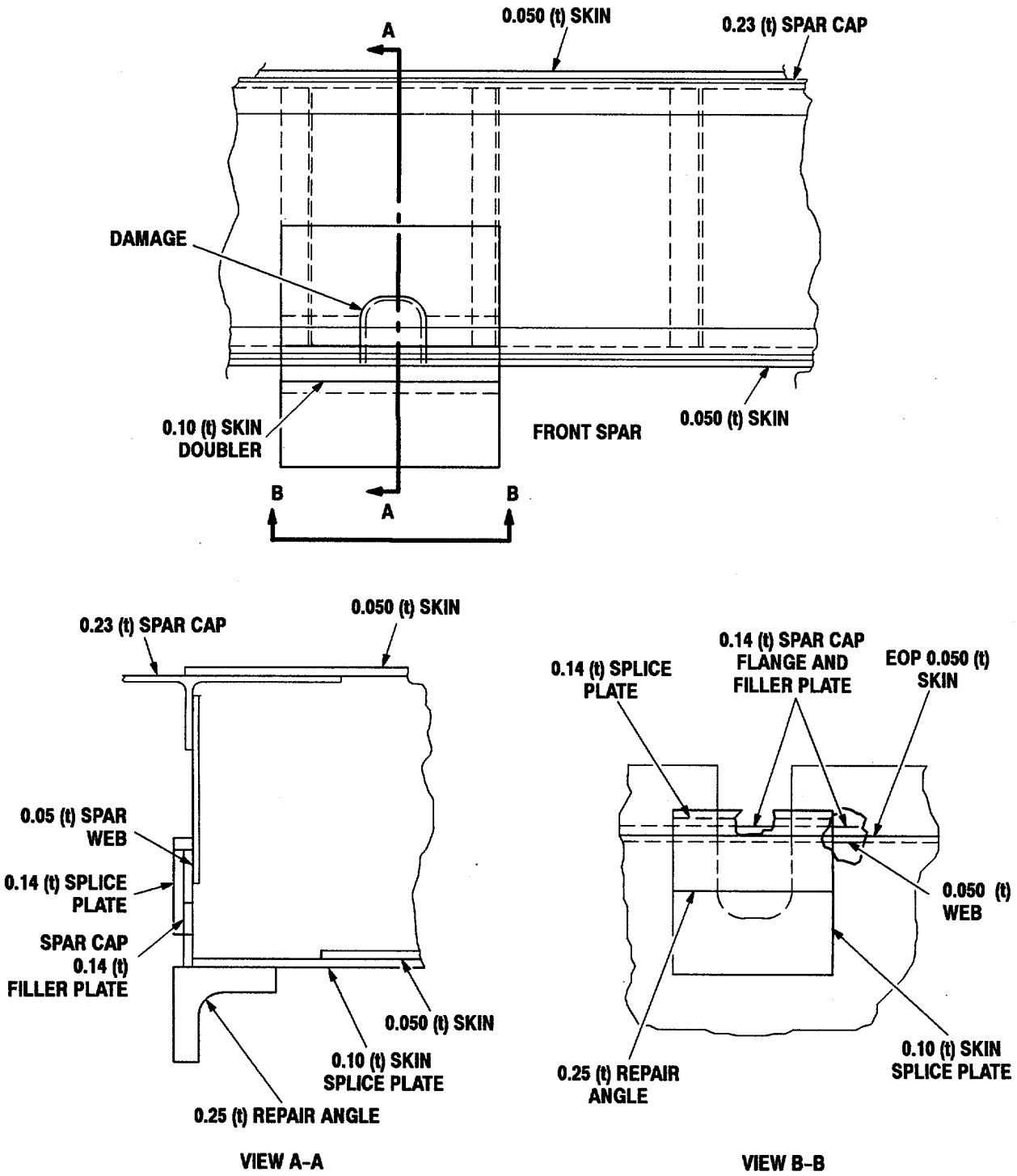

M102-049

Figure 2-42. Repair Concept 4: External Angle and Skin Patch

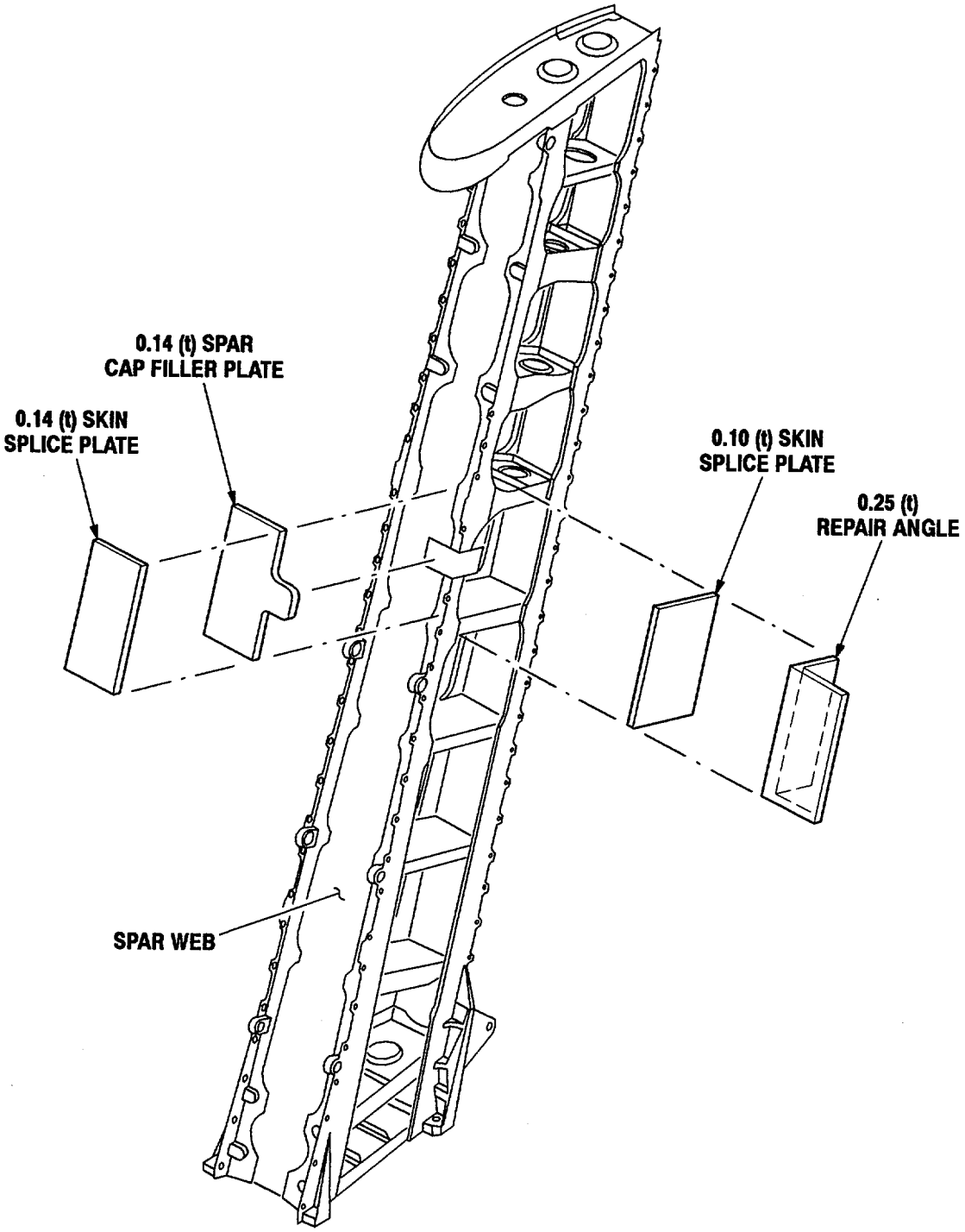

M102-050

Figure 2-43. Repair Concept 4: Isometric Exploded View

2-51. REPAIR CONCEPT 5: STABILATOR SPAR INVOLVING DAMAGE TO THE SPAR CAP AND WEB.

2-51.1. General Information: This repair applies to damage to the stabilator spar in which sections of the spar cap and web have been removed. The repair involves cutting away enough skin to provide access to the spar. Repair the web and cap internally with doublers and nested angles. Install an outer skin patch.

2-51.2. Limitations: Type I deferment after field repair. Inspect repair area after every flight.

2-51.3. Personnel/Time Required:

- 1 person
- 4 hours

2-51.4. Materials/Tools Required:

- Refer to Table 2-36 for structural materials
- Refer to Appendix E, Table E-9 for structural fasteners
- Airframe repairman's tool kit (item 40, App B)
- Blind rivet tool kit (item 41, App B)

2-51.5. Procedural Steps: (Figures 2-44 through 2-46).

1. Remove enough skin to provide working access to stabilator spar.
2. Remove and smooth damage to spar cap and web as shown in Figure 2-44.
3. Repair spar cap and web using doubler, web filler, and two nested splice angles as shown in Figure 2-45.
4. Install repair doubler, web filler, and splice angles using blind rivets.
5. Fabricate and fit outer skin patch, strap, and shims as shown in Figure 2-46. Make skin patch large enough to pick up at least two existing rivet rows around cutout. Thickness of skin patch to be one gage thicker than damaged skin area.
6. Install skin patch, strap, and shim(s) using blind rivets. Shim as required to eliminate gaps under skin patch (Figure 2-46).
7. Touch up finish as required in accordance with TM 55-1500-345-23.
8. Record BDR action taken. When mission is complete, as soon as practical, repair equipment/system using standard maintenance procedures.

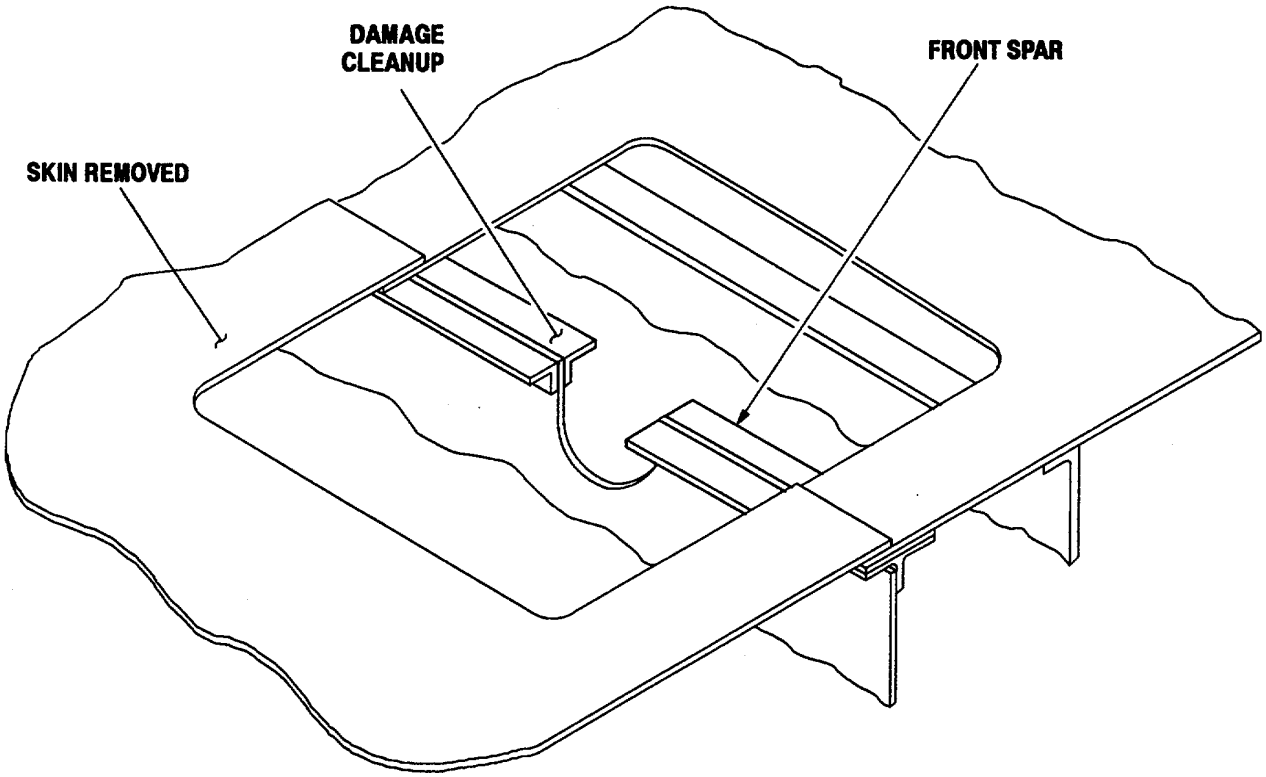

M102-053

Figure 2-44. Repair Concept 5: Damage Removal

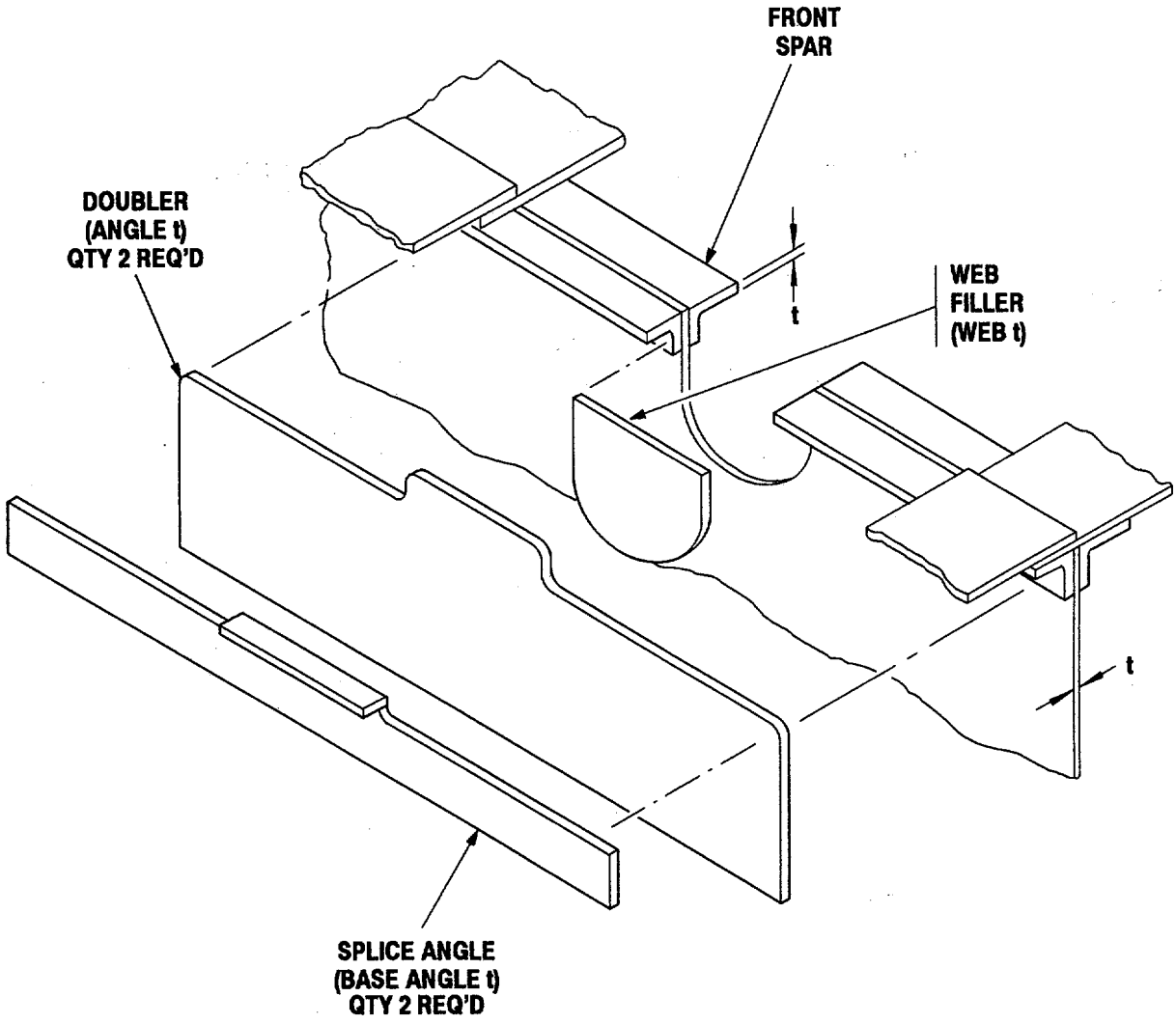

M102-054

Figure 2-45. Repair Concept 5: Web and Cap Repair

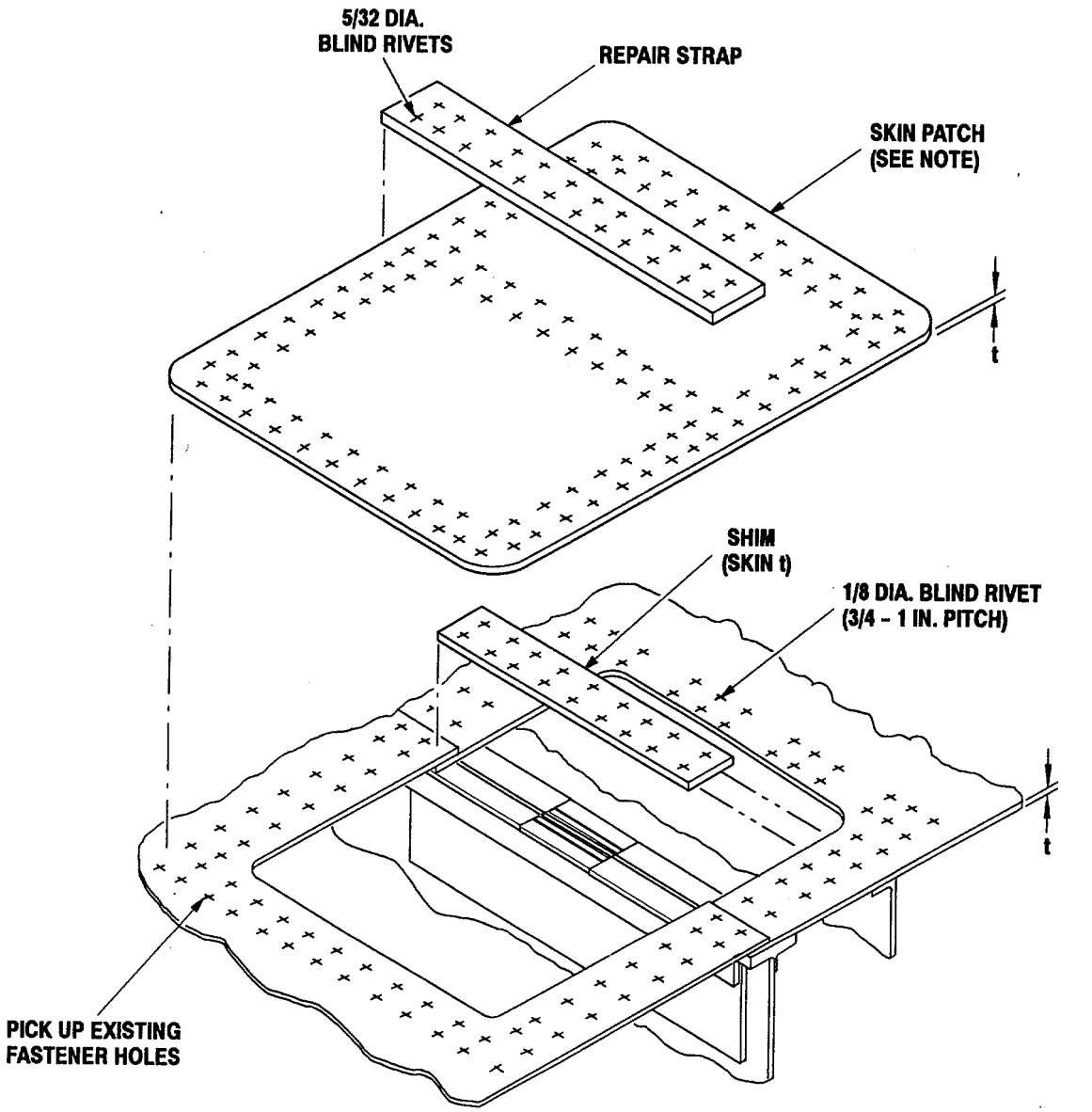

NOTE

GENERAL RULE FOR ALL REPAIRS:

FILLER AND SHIMS SHOULD BE THE SAME THICKNESS AS ORIGINAL STRUCTURE.

SKIN PATCH SHOULD BE ONE GAGE THICKER THAN THE ORIGINAL SKIN (MINIMUM).

M102-055

Figure 2-46. Repair Concept 5: Skin Repair

2-52. REPAIR CONCEPT 6: FORGED/MACHINED FRAME INVOLVING DAMAGE TO FRAME CAP AND WEB.

2-52.1. General Information: This repair applies to forged/machined frames. The repair is made using heavy doubler plates, extrusions, and skin fillers, installed with steel lockbolts or Hi-Lok fasteners. Angle extrusion maybe used in place of the splice tee if the tee extrusion is unavailable.

2-52.2. Limitations: Type I deferment after field repair. Inspect repair area after every flight.

2-52.3. Personnel/Time Required:
- 1 person
- 3 hours

2-52.4. Materials/Tools Required:
- Refer to Table 2-36 for structural materials
- Refer to Appendix E, Table E-9 for structural fasteners
- Airframe repairman's tool kit (item 40, App B)
- Blind rivet tool kit (item 41, App B)

2-52.5. Procedural Steps: (Figures 2-47 and 2-48).

1. Clean up damaged areas of frame cap and skin. Remove all sharp edges and cracks (Figure 2-47).

2. Cut and shape extruded tee section and skin filler(s) to match and fill holes created from clean-up, in step 1 (Figure 2-48).

3. Cut two web doublers from aluminum plate stock.

4. Install one doubler to each side of web using high strength fasteners (Figure 2-48).

5. Cut splice tee section or two angle sections from aluminum extrusion.

6. Fasten splice tee or angle sections to frame cap using high-strength fasteners (Figure 2-48).

7. Touch up finish as required in accordance with TM 55-1500-345-23.

8. Record BDR action taken. When mission is complete, as soon as practical, repair equipment/system using standard maintenance procedures.

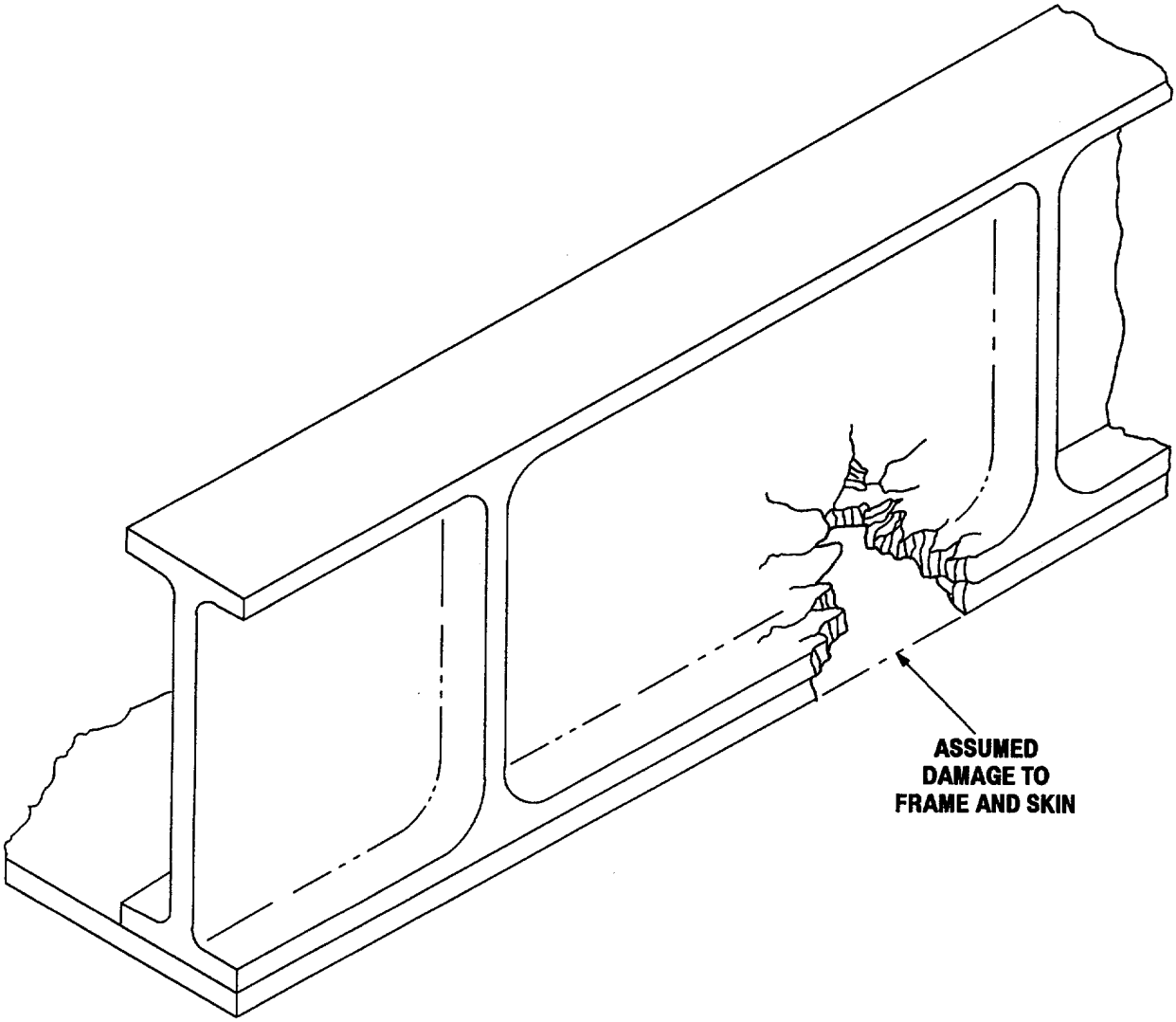

M102-056

Figure 2-47. Repair Concept 6: Damage to Forged Frame

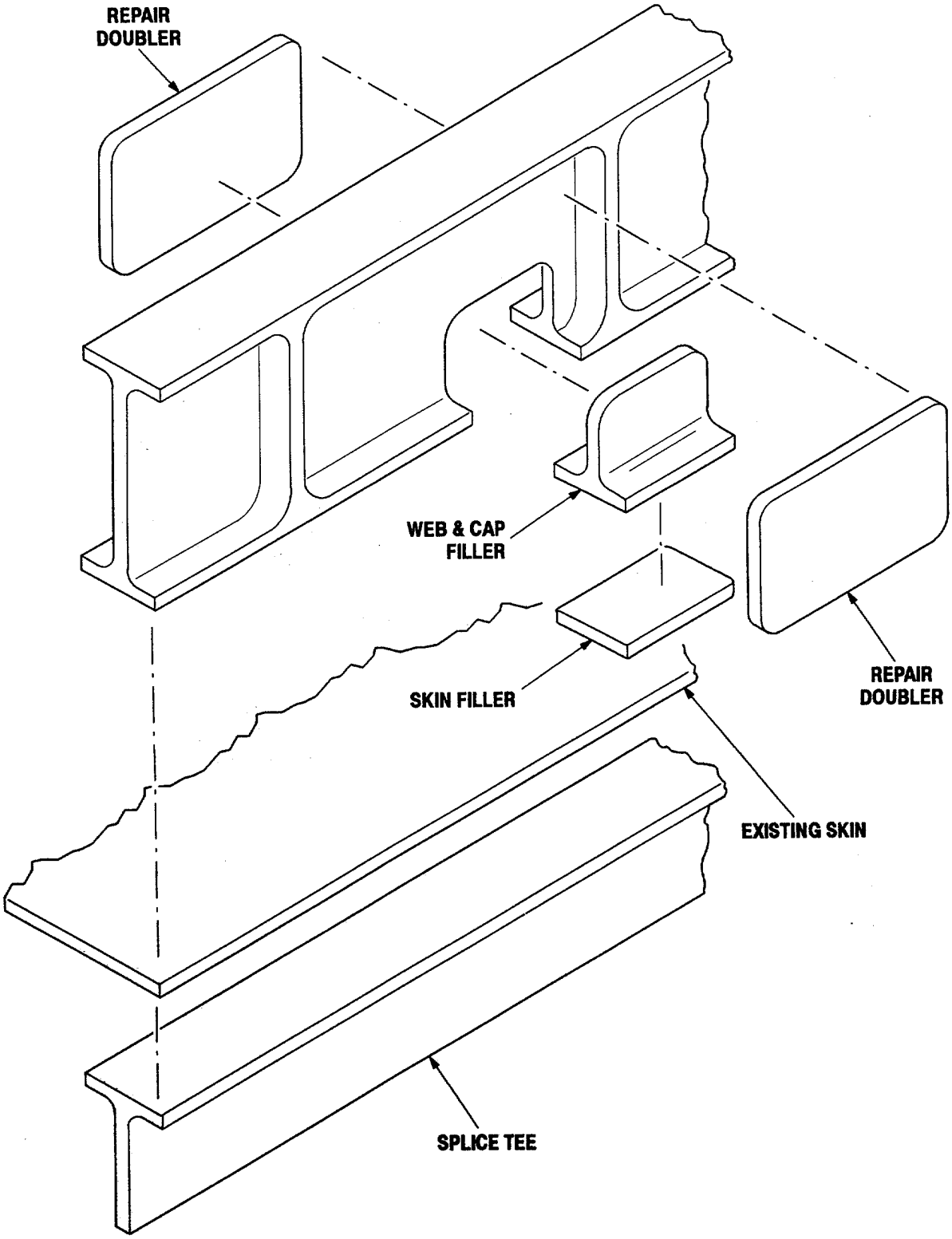

M102-057

Figure 2-48. Repair Concept 6: Isometric View

2-53. REPAIR CONCEPT 7: BULKHEAD INVOLVING DAMAGE TO THE WEB AND SUPPORT BEAM (REPAIR EXTERNAL).

2-53.1. General Information: This repair applies to damage to bulkheads. The repair is made externally using a conventional skin patch and extruded angles. This type of repair would be useful when an internal repair is to be deferred and access to the compartment is unnecessary.

2-53.2. Limitations: Type I deferment after field repair. Inspect repair area after every flight.

2-53.3. Personnel/Time Required:
- 1 person
- 2 hours

2-53.4. Materials/Tools Required:
- Refer to Table 2-36 for structural materials
- Refer to Appendix E, Table E-9 for structural fasteners
- Airframe repairman's tool kit (item 40, App B)
- Blind rivet tool kit (item 41, App B)

2-53.5. Procedural Steps: (Figure 2-49).

1. Remove and smooth damage to bulkhead web and support beam. The skin can be trimmed back or cut flush with removed section of beam.

2. Cut and fit skin patch to cutout allowing sufficient size for at least two rows of fasteners around the repair. Thickness of skin patch should be 1.5 times web thickness.

3. Pick up existing beam attachments on each side of patch. If gap exists between beam and skin patch, fit and install shim between skin patch and beam.

4. Cut two sections of extruded angle as shown.

5. Install skin patch and two angles using 5/32 inch diameter blind rivets.

6. Touch up finish as required in accordance with TM 55-1500-345-23.

7. Record BDR action taken. When mission is complete, as soon as practical, repair equipment/system using standard maintenance procedures.

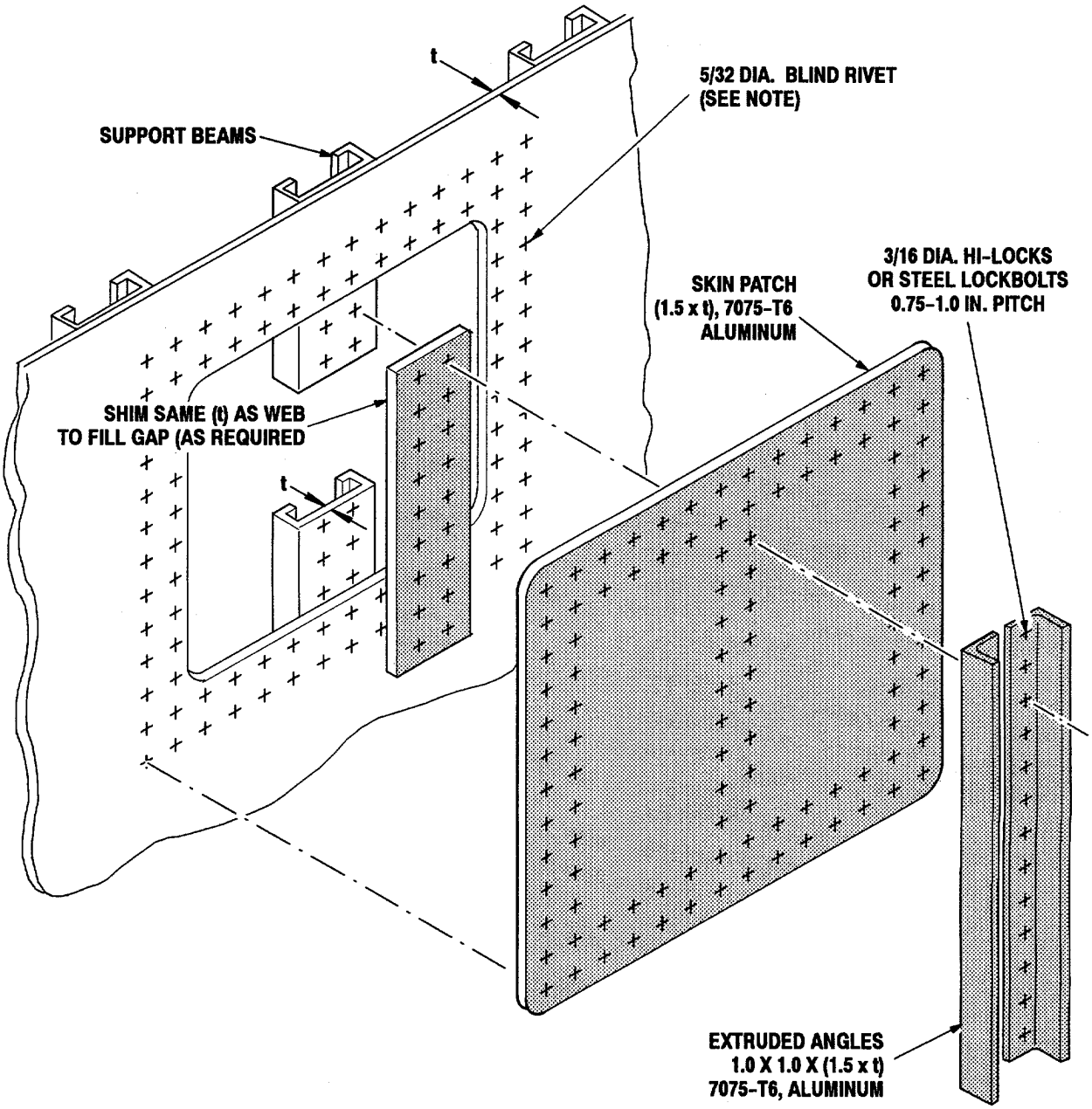

NOTE:

PICK UP ALL EXISTING FASTENER LOCATIONS. TWO ROWS IN SKIN PATCH OVERLAP AT 3/4 IN. PITCH. ONE ROW IN REPAIR ANGLES AT EXISTING PITCH.

M102-062

Figure 2-49. Repair Concept 7: Isometric View

2-54. REPAIR CONCEPT 8: BEAMS INVOLVING DAMAGE TO THE WEB AND OUTER CAP.

2-54.1. General Information: This repair applies to the built-up sheet metal beams. The repair consists of a web shim and two repair angles for repair of damage to the beam cap and web.

2-54.2. Limitations: Type I deferment after field repair. Inspect repair area after every flight.

2-54.3. Personnel/Time Required:

- 1 person
- 2 hours

2-54.4. Materials/Tools Required:

- Refer to Table 2-36 for structural materials
- Refer to Appendix E, Table E-9 for structural fasteners
- Airframe repairman's tool kit (item 40, App B)
- Blind rivet tool kit (item 41, App B)

2-54.5. Procedural Steps: (Figure 2-50).

1. Remove damaged material from beam cap and web.

2. Fabricate and install web shim/doubler.

3. Repair beam cap using fabricated sheet metal angles. Thickness of repair angles to be 1.5 times cap and web thickness.

4. Remove existing nutplates from cap prior to installing lower repair angle. Reinstall nutplates when angle installation is complete.

5. Install repair angles using 1/8 inch to 5/32 inch diameter rivets.

6. Touch up finish as required in accordance with TM 55-1500-345-23.

7. Record BDR action taken. When mission is complete, as soon as practical, repair equipment/system using standard maintenance procedures.

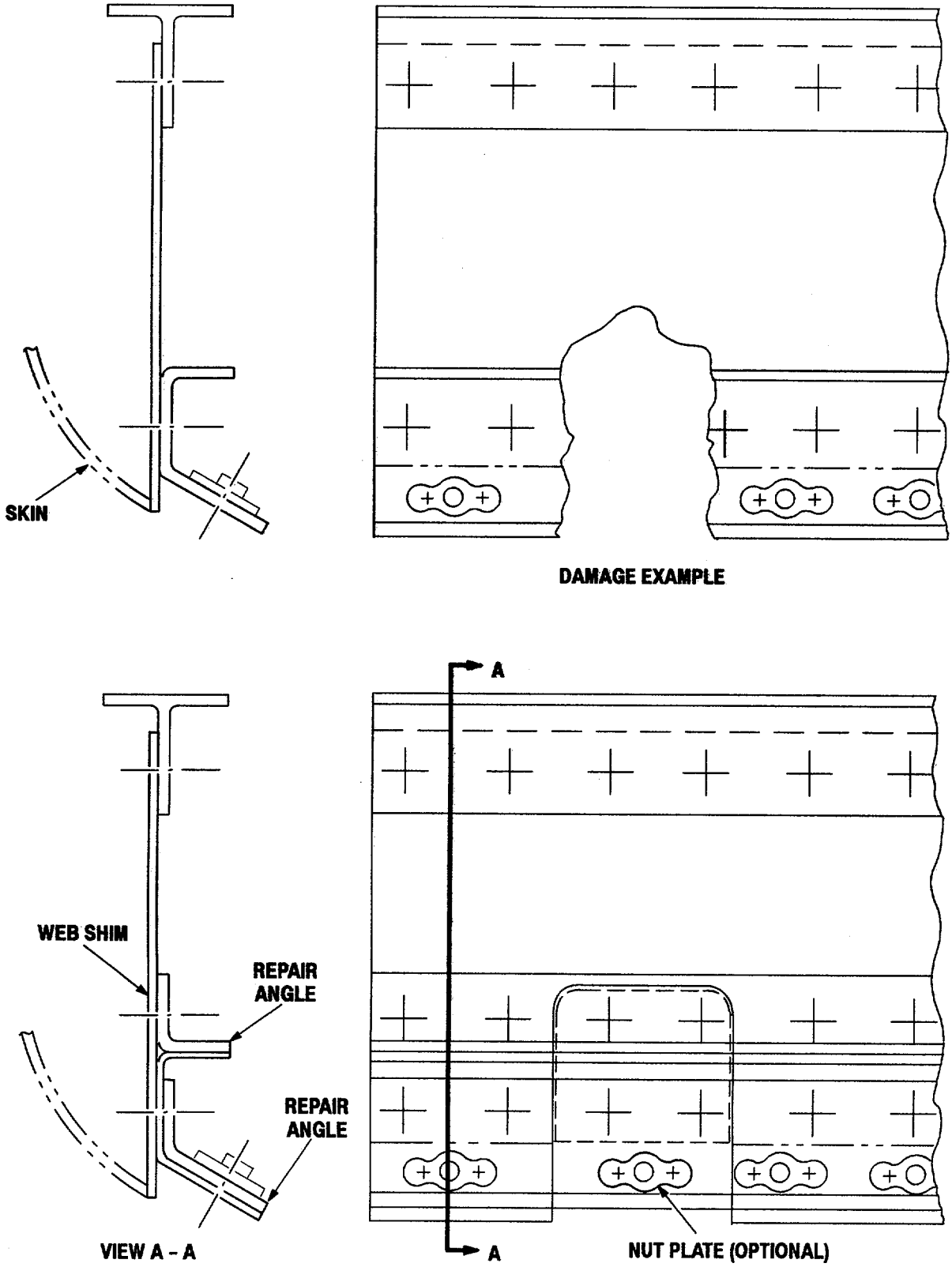

Figure 2-50. Repair Concept 8: Damage Cleanup and Web and Cap Repair

2-55. REPAIR CONCEPT 9: BEAMS INVOLVING DAMAGE TO THE WEB AND OUTER CAP (REPAIR EXTERNAL).

2-55.1. General Information: This repair applies to the heavy built-up sheet metal beams and frames. The repair is made externally using a skin patch and stiffening angle.

2-55.2. Limitations: Type II deferment after field repair.

2-55.3. Personnel/Time Required:

- 1 person
- 2 hours

2-55.4. Materials/Tools Required:

- Refer to Table 2-36 for structural materials
- Refer to Appendix E, Table E-9 for structural fasteners
- Airframe repairman's tool kit (item 40, App B)
- Blind rivet tool kit (item 41, App B)

2-55.5. Procedural Steps: (Figure 2-51).

1. Remove damaged material from beam frame and caps.

2. Cut and form skin patch and stiffening angle.

3. Orient angle in direction of greatest damage. Locate and pick up existing fastener locations in frame and beam caps.

4. Install skin patch and stiffening angle using MS90354-05 blind fasteners (or equivalent).

5. Touch up finish as required in accordance with TM 55-1500-345-23.

6. Record BDR action taken. When mission is complete, as soon as practical, repair equipment/system using standard maintenance procedures.

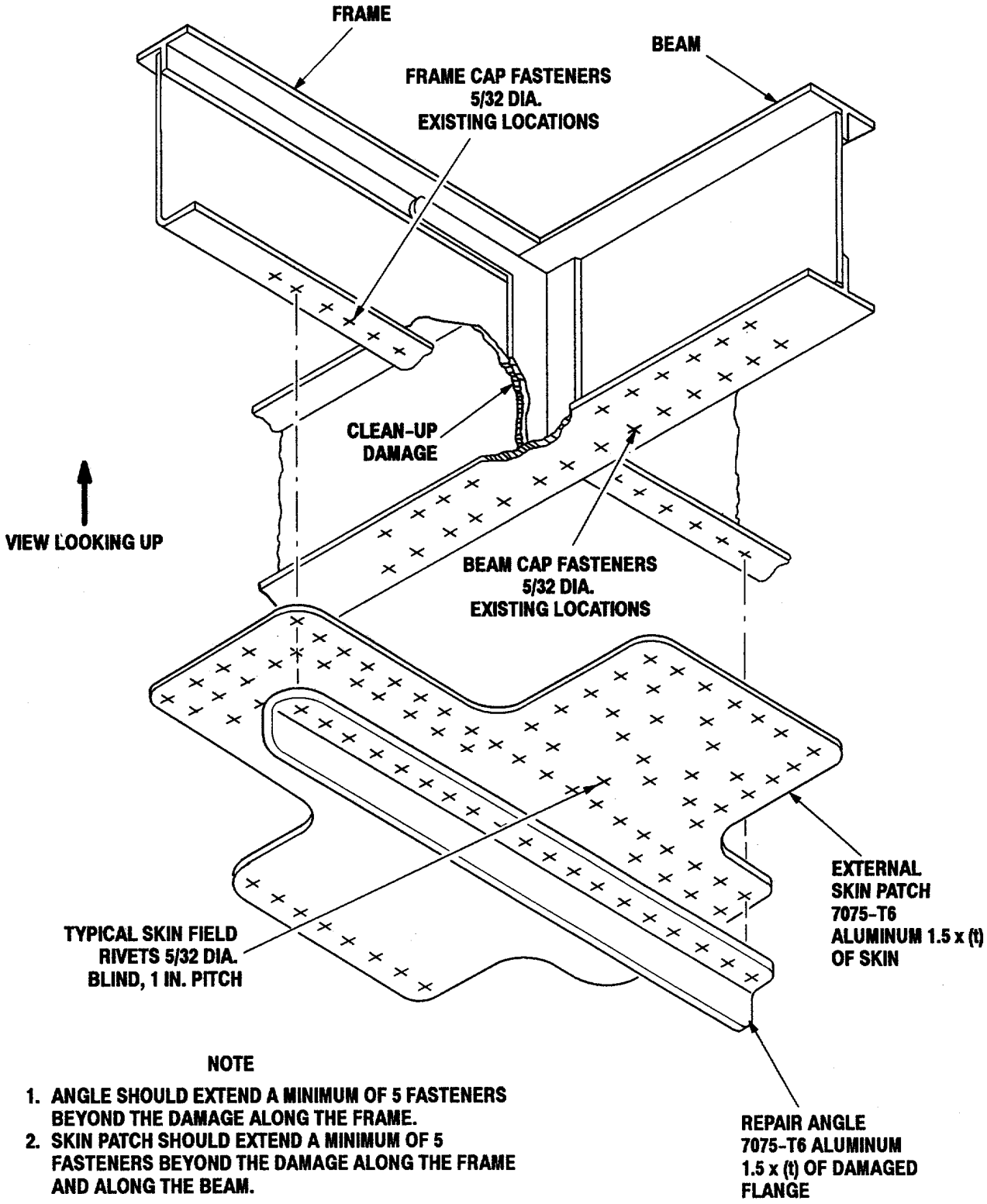

NOTE

1. ANGLE SHOULD EXTEND A MINIMUM OF 5 FASTENERS BEYOND THE DAMAGE ALONG THE FRAME.
2. SKIN PATCH SHOULD EXTEND A MINIMUM OF 5 FASTENERS BEYOND THE DAMAGE ALONG THE FRAME AND ALONG THE BEAM.

Figure 2-51. Repair Concept 9: Isometric View

2-56. ELECTRO MAGNETIC INTERFERENCE (EMI) PANEL COATING REPAIR.

2-56.1. General Information: This repair method is a temporary repair for EMI coatings on metal and composite surfaces. Refer to Figure 2-52 for location of EMI doors, panels, and fairings. For repair of EMI seals or to repair EMI coated surfaces using conductive coating, refer to TM 1-1520-238-23.

2-56.2. Limitations: None.

2-56.3. Personnel/Time Required:

- 1 person
- 1 hour

2-56.4. Materials/Tools Required:

- Cloth (item 11, App C)
- Isopropyl alcohol (item 19, App C)
- Abrasive paper (item 26, App C)
- Tape (item 61, App C)
- Light duty laboratory apron (item 4, App B)
- Chemical protective gloves (item 19, App B)
- Adjustable air filtering respirator (item 28, App B)
- Airframe repairman's tool kit (item 40, App B)

2-56.5. Procedural Steps:

1. Lightly abrade damaged coating area using 180 grit abrasive paper, removing any loose particles from surface.

2. Wipe surface with alcohol and cheesecloth. Allow to dry.

3. Cut section of conductive tape long enough to overlap repair area by 0.5 inch on each side. Round corners of replacement tape sections prior to removing tape backing.

4. Apply tape over repair area and press firmly in place to ensure continuous contact with surface.

5. Carefully inspect to ensure all areas requiring conductivity are completely repaired.

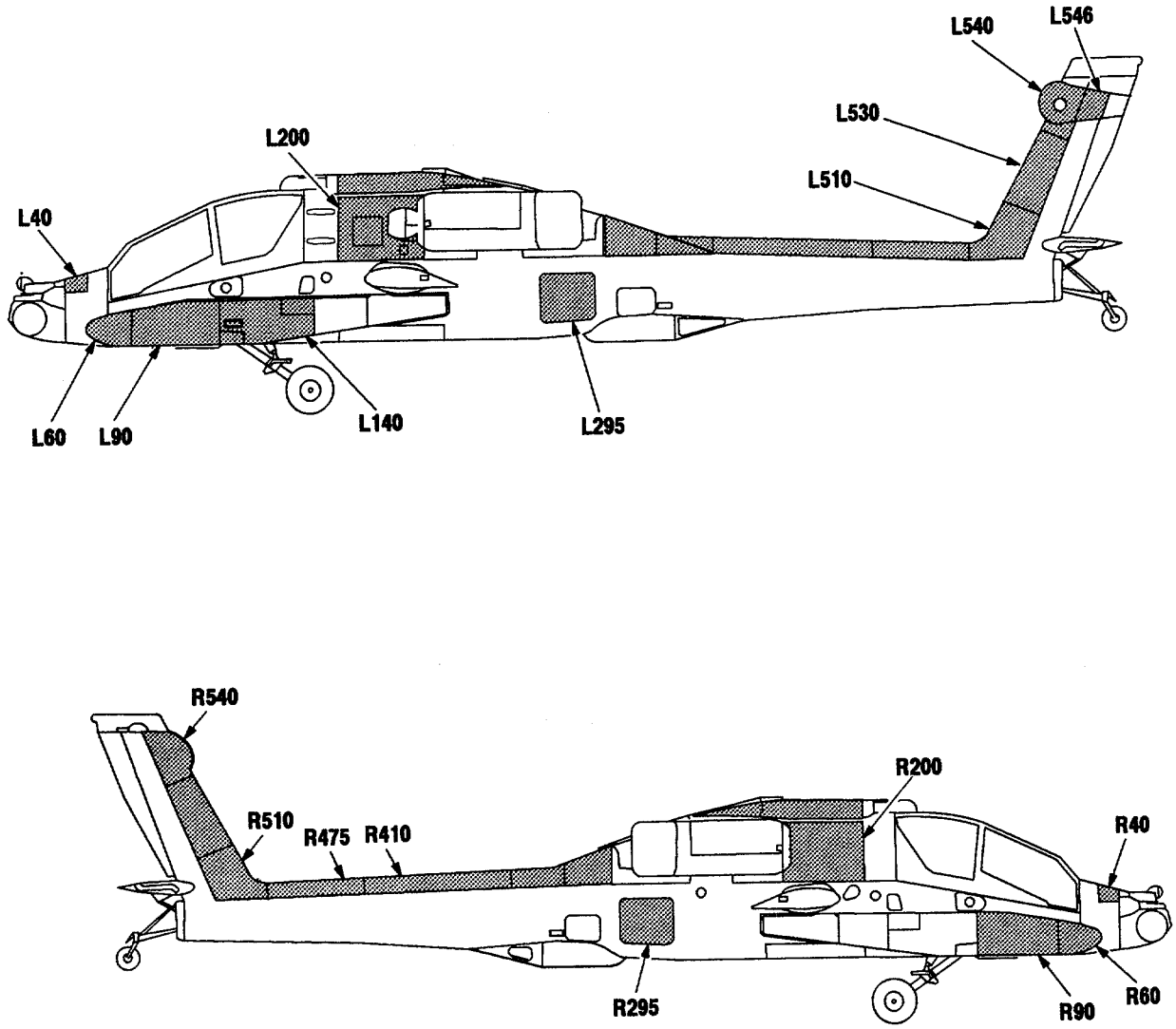

Figure 2-52. EMI Protected Doors, Panels, and Fairings Location (Sheet 1 of 2)

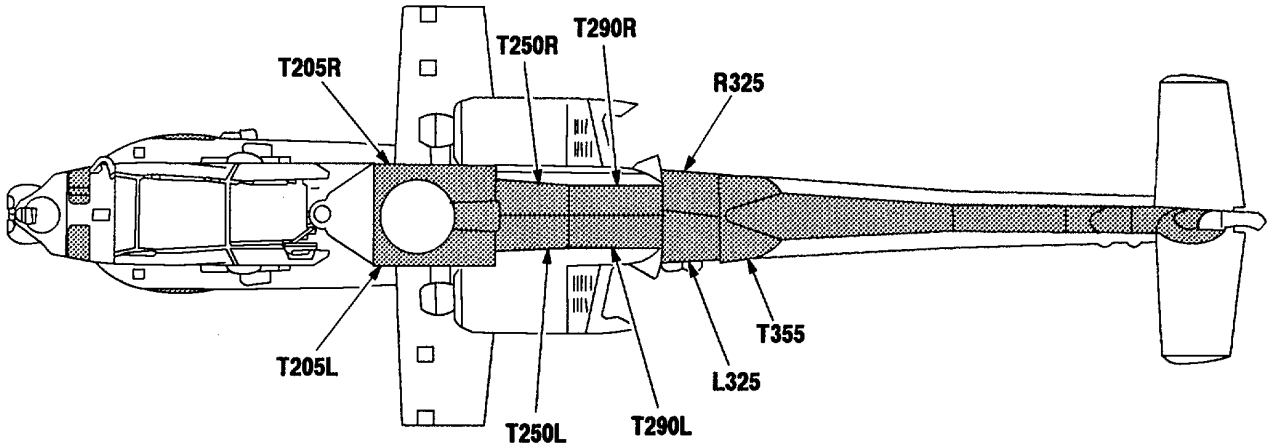

VIEW LOOKING DOWN

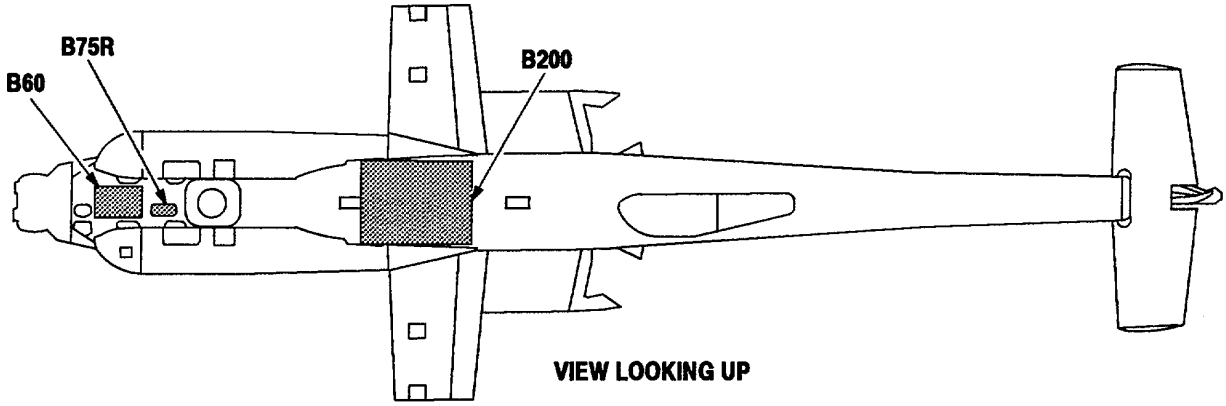

VIEW LOOKING UP

Figure 2-52. EMI Protected Doors, Panels, and Fairings Location (Sheet 2 of 2)

Section VII. AIRFRAME STRUCTURAL MATERIAL CHARTS

2-57. AIRFRAME STRUCTURAL MATERIAL CHARTS.

The airframe structural material charts (Tables 2-37 thru 2-45) contain the part number, material, and thickness of each major structural member of the airframe. Refer to Figures 2-53 thru 2-61.

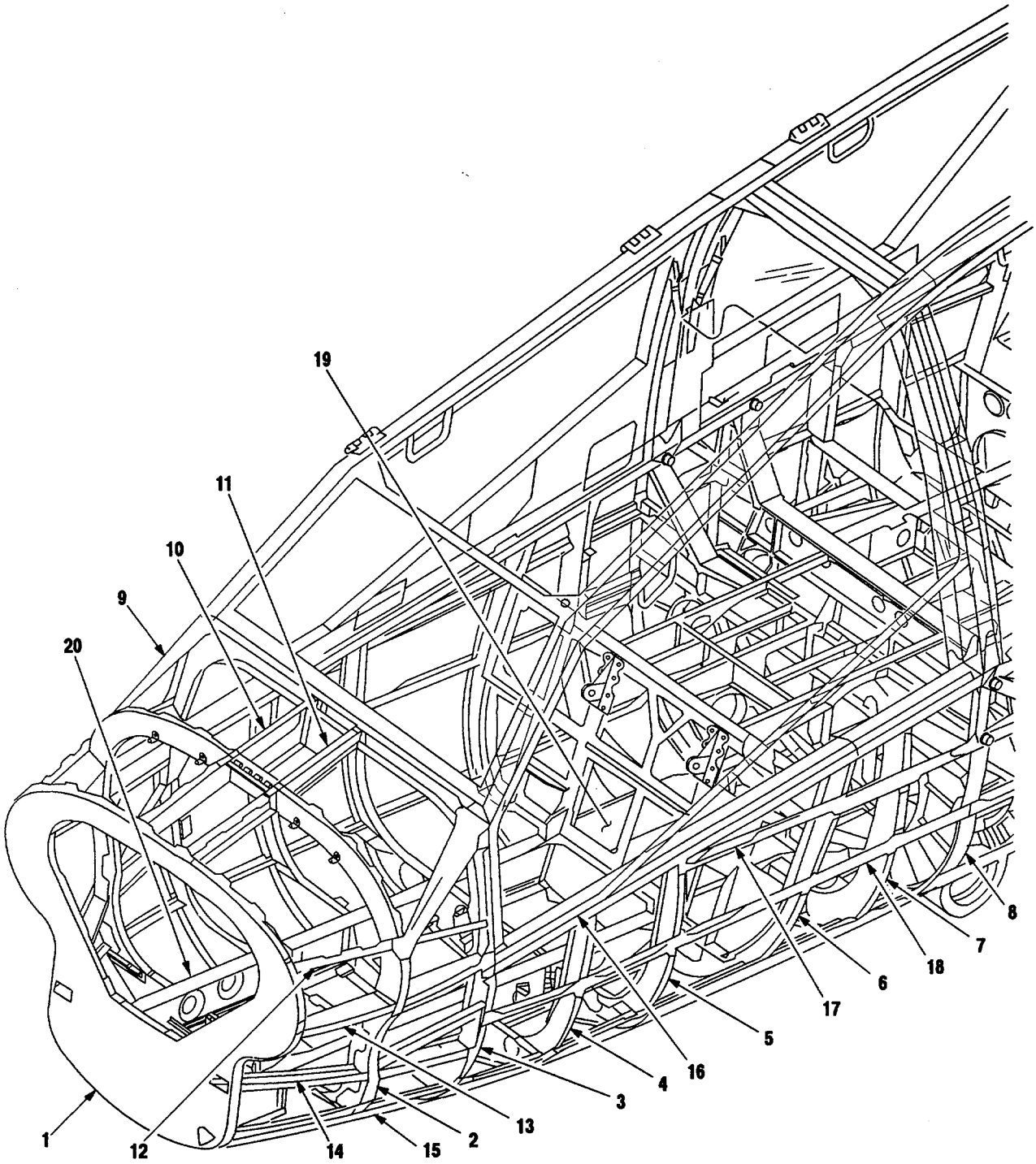

Figure 2-53. AH-64A Fuselage Frame Structure (Sheet 1 of 5

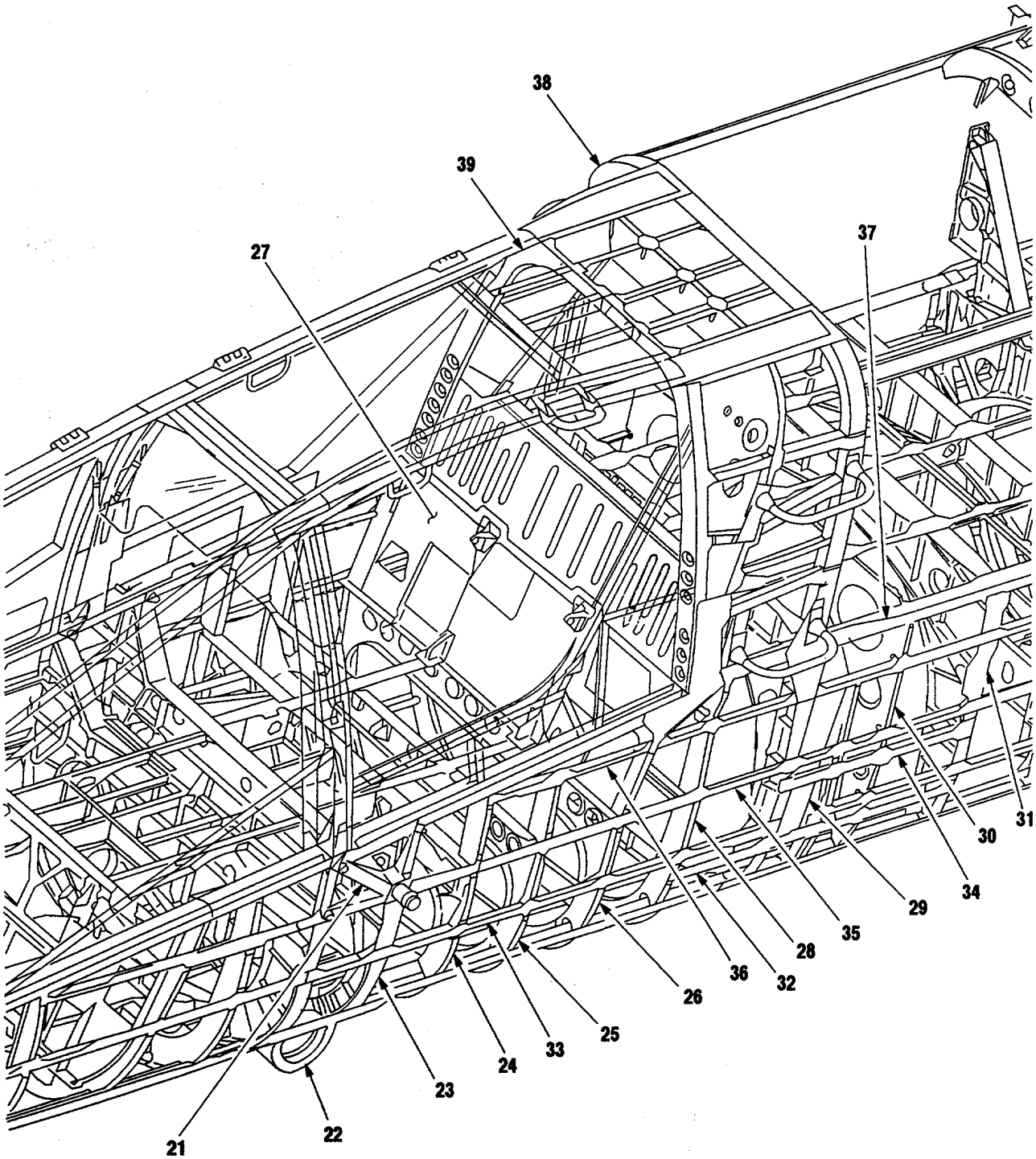

Figure 2-53. AH-64A Fuselage Frame Structure (Sheet 2 of 5)

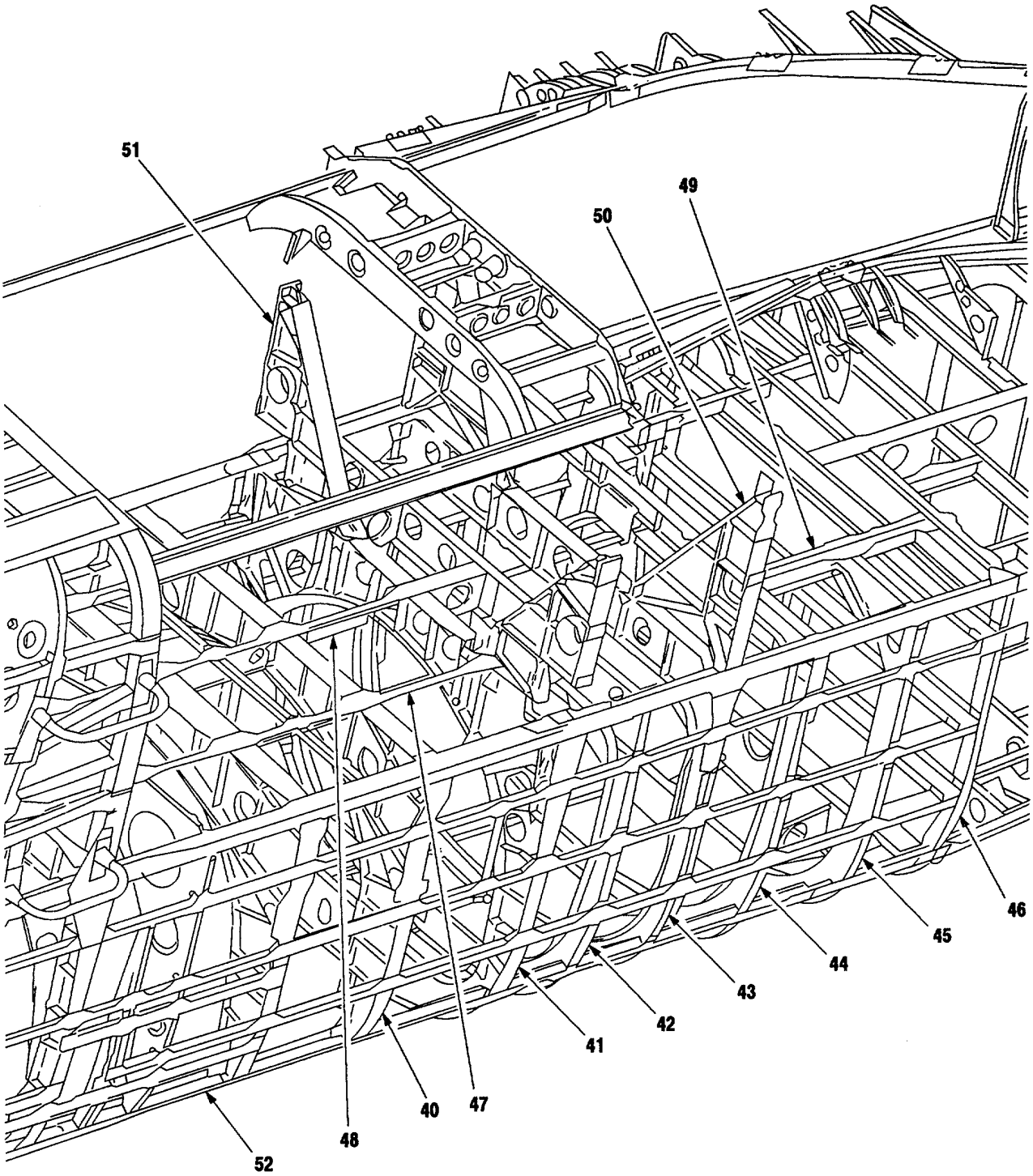

Figure 2-53. AH-64A Fuselage Frame Structure (Sheet 3 of 5)

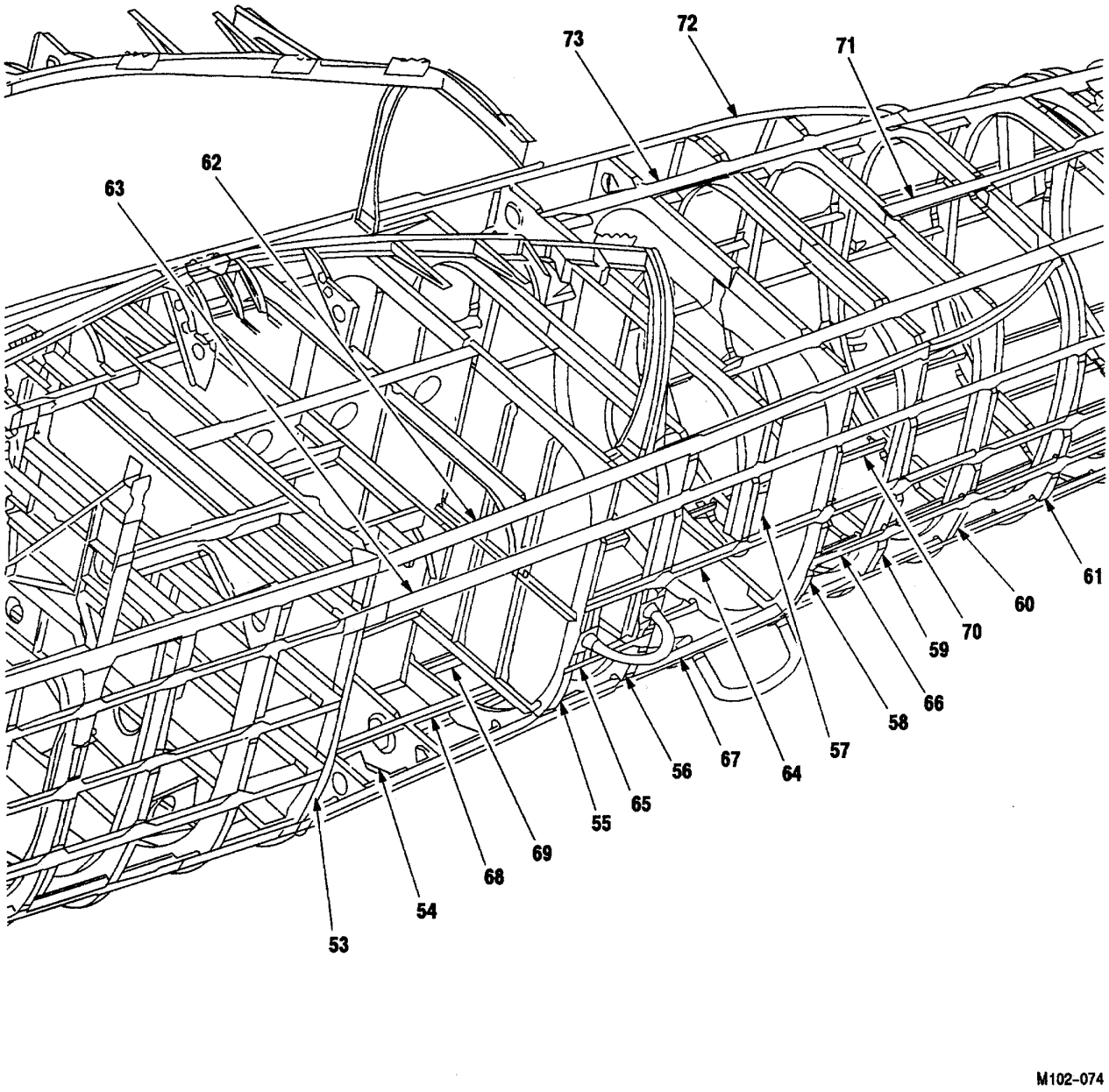

Figure 2-53. AH-64A Fuselage Frame Structure (Sheet 4 of 5)

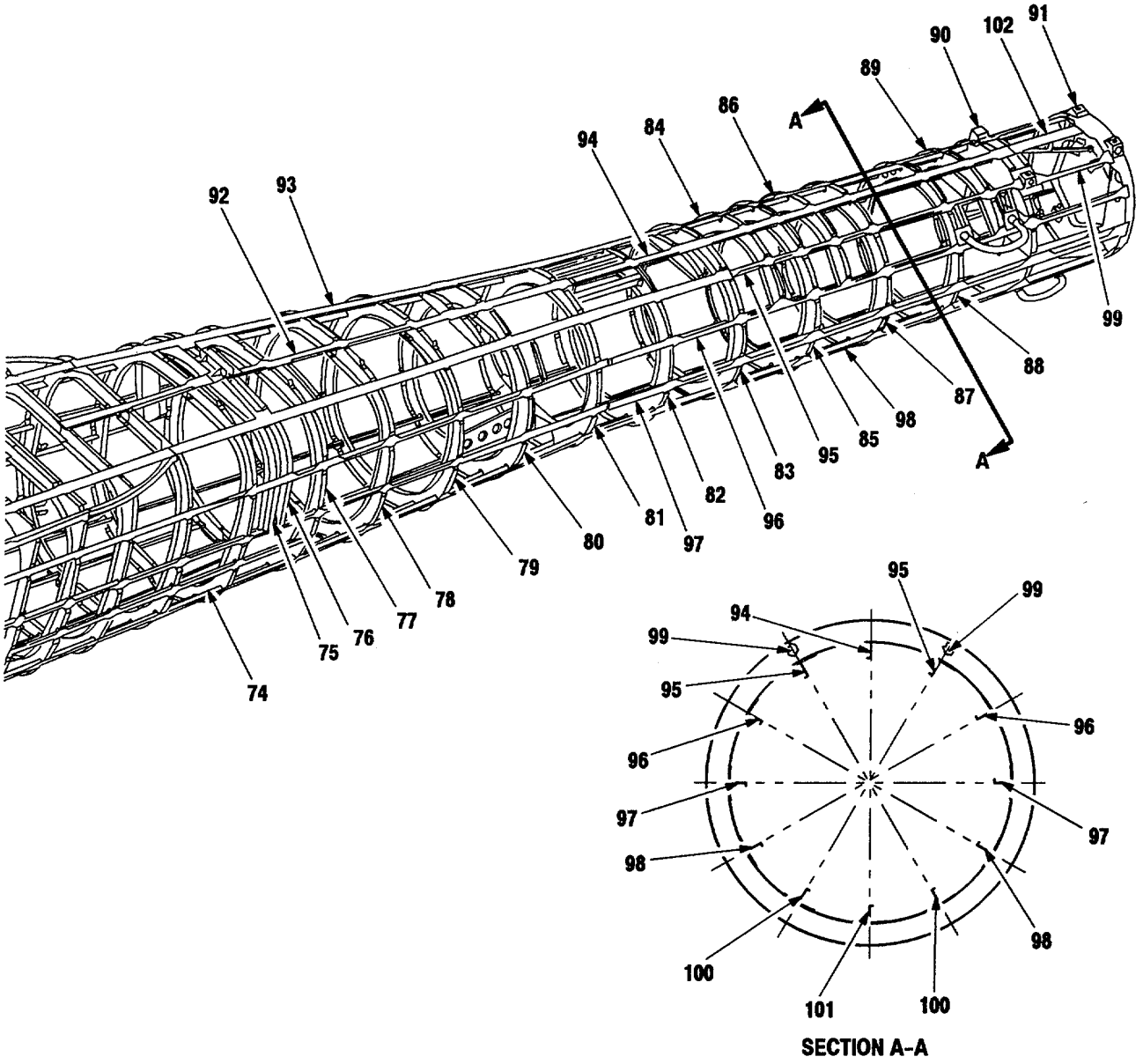

Figure 2-53. AH-64A Fuselage Frame Structure (Sheet 5 of 5)

Table 2-37. AH-64A Fuselage Frame Structure Material Chart

Item No.	Part Number	Nomenclature	Material	Thickness
1	7-311111010-5	Frame - F.S. 35.50	7075-T42 AlClad ALY Sheet	0.040 in
2	7-311111020-3 7-311111020-5/6	Frame - F.S. 46.50	2024-T42 AL ALY Sheet 7075-T6 AL ALY Sheet	0.040 in 0.080 in
3	7-311111030-5/6 7-311111030-7	Frame - F.S. 57.50	7075-T6 AL ALY Sheet 2024-T42 AL ALY Sheet	0.080 in 0.040 in
4	7-311111040-3/4 7-311111040-5	Frame - F.S. 69.75	7075-T6 AL ALY Sheet 2024-T42 AL ALY Sheet	0.071 in 0.050 in
5	7-311111050-3/4 7-311111050-5	Frame - F.S. 80.50	7075-T6 AL ALY Sheet 2024-T42 AL ALY Sheet	0.080 in 0.040 in
6	7-311111061-39	Frame, Canted - F.S. 91.70	7149-T7352 AL ALY Forging	0.142 in
7	7-311111070-3/4	Frame - F.S. 105.00	2024-T42 AL ALY Sheet	0.040 in
8	7-311111081-5	Frame - F.S. 115.00	7149-T7352 AL ALY Forging	0.250 in
9	7-211111153-3/4	Channel - Canopy Bow, Fwd	2024-T42 AL ALY Sheet	0.040 in
10	7-311111151-5/6	Intercostal - F.S. 35.50 to 57.50	2024-T42 AL ALY Sheet	0.040 in
11	7-311111151-7/8	Intercostal - F.S. 35.50 to 46.50	2024-T42 AL ALY Sheet	0.040 in
12	7-311111184-17/18	Intercostal - F.S. 35.50 to 57.50	2024-T42 AL ALY Sheet	0.040 in
13	7-311111148-7/8/9	Longeron - W.L. 127.048	2024-T42 AL ALY Sheet	0.050 in
14	7-311111184-11/12	Intercostal - F.S. 35.50 to 46.50	2024-T42 AL ALY Sheet	0.050 in
15	7-311111171-3/4	Angle, CoPilot Floor - F.S. 35.50 to 115.00	7075-T6 AL ALY Sheet	0.080 in
16	7-311111144-1/2	Longeron, Canopy - F.S. 57.50 to 158.668	7075-T6511 AL ALY Ext	0.155 in
17	7-311111090-19	Stringer 4 - F.S. 80.50 to 115.00, W.L. 129.20	7075-T6511 AL ALY Ext Tee	0.090 in
18	7-311111090-29	Stringer 5 - F.S. 57.50 to 115.00, W.L. 120.50	7075-T6511 AL ALY Ext Tee	0.090 in
19	7-311111155-3/4	Intercostal - Gun Mount Spt	2024-T351 AL ALY Plate	0.125 in

Table 2-37. AH-64A Fuselage Frame Structure Material Chart - Cont

Item No.	Part Number	Nomenclature	Material	Thickness
20	7-311111140-47/48	Keelbeam - F.S. 80.50 to 93.181	7075-T6511 AL ALY Ext Tee	0.063 in
21	7-311113409-1/2/3/4	Mount, Shock Strut - Main Landing Gear	18% NI Maraging Steel Forging	0.324 in
22	7-311113399-3/4	Pivot Attachment - Main Landing Gear	7149-T7352 AL ALY Forging	0.270 in
23	7-311113110	Bulkhead - F.S. 125.00	7149-T7352 AL ALY Hand Forging	0.425 in
24	7-311113130-21/23	Frame - F.S. 135.00	2024-T42 AL ALY Sheet	0.050 in
25	7-311113140-3/4/29	Frame - F.S. 144.50	2024-T42 AL ALY Sheet	0.050 in
26	7-311113150-3	Frame - F.S. 154.30	2024-T42 AL ALY Sheet	0.050 in
27	7-311113176-5	Frame - Pilots Bulkhead	7149-T7352 AL ALY Hand Forging	0.070 in
28	7-311113170-3/4	Frame - F.S. 163.42	2024-T42 AL ALY Sheet	0.050 in
29	7-311113118-3 7-311113225-3	Frame - F.S. 176.00 Frame - F.S. 176.00	7149-T7352 AL ALY Hand Forging 7149-T7351 AL ALY Rolled Plate	0.220 in 0.220 in
30	7-311113190	Frame - F.S. 188.35	2024-T42 AL ALY Sheet	0.040 in
31	7-311113121-3/41	Frame - F.S. 199.75	7149-T7352 AL ALY Hand Forging	0.275 in
32	7-311113280-43/151	Stringer - F.S. 163.42 - 199.75	7075-T6511 AL ALY Ext Tee	0.090 in
33	7-311113280-19/135	Stringer 5 - WL. 120.50	7075-T6511 AL ALY Ext Tee	0.090 in
34	7-311113280-15/131	Stringer - F.S. 176.00 - 199.75	7075-T6511 AL ALY Ext Tee	0.090 in
35	7-311113280-13/127 /167	Stringer 4 - W.L. 129.20	7075-T6511 AL ALY Ext Tee	0.090 in
36	7-311113280-93/107 /123	Stringer 3 - W.L. 139.34	7075-T6511 AL ALY Ext Tee	0.090 in
37	7-311113349-1/2/3/4	Stringer 2 - W.L. 145.50	7075-T6511 AL ALY Ext Tee	0.190 in
38	7-311113490-5/6	Frame Upper - F.S. 176.75	2024-T42 AL ALY Sheet	0.071 in
39	7-311113151-3/4	Frame Upper - F.S. 158.667	2024-T42 AL ALY Sheet	0.071 in

Table 2-37. AH-64A Fuselage Frame Structure Material Chart - Cont

Item No.	Part Number	Nomenclature	Material	Thickness
40	7-311113209	Frame - F.S. 214.50	7149-T7352 AL ALY Hand Forging	0.290 in
41	7-311113123-3	Frame - F.S. 230.00	7149-T7352AL ALY Forging	0.230 in
42	7-311113230-3/5	Frame - F.S. 238.85	2024-T42 AL ALY Sheet	0.040 in
43	7-311113240-3/5	Frame - F.S. 247.71	2024-T42 AL ALY Sheet	0.050 in
44	7-311113250-3	Frame - F.S. 258.47	2024-T42AL ALY Sheet	0.040 in
45	7-311113260-5/6	Frame - F. S. 269.23	2024-T42 AL ALY Sheet	0.071in
46	7-311113602-29	Frame - F.S. 280.00	2024-T42AL ALY Sheet	0.032 in
47	7-311113270-9/343	Stringer - F.S. 199.75 to214.50	7075-T6511AL ALY Ext Tee	0.090 in
48	7-311113270-11/345	Stringer - F.S.176.00 to 199.75	7075-T6511AL ALY Ext Tee	0.090 in
49	7-311113270-33	Intercostal	2024-T42 AL ALY Sheet	0.050 in
50	7-311113128-3/4	Support - Aft Engine Mount F.S.247.71	7149-T7352 AL ALY Hand Forging	0.300 in
51	7-311113292	Support - Fwd Engine Mount F.S. 230.00	7149-T7352 AL ALY Hand Forging	0.400 in
52	7-311113328-5/6	Longeron, Lower - F.S. 171.22 to 280.00	7075-T6511 AL ALY Ext Tee	0.187in
53	7-311113555-3/4	Frame, Lower - F.S. 290.00	2024-T42 AL ALY Sheet	0.032 in
54	7-311113556-3/4	Frame, Lower - F.S. 300.00	2024-T42 AL ALY Sheet	0.032 in
55	7-311113557-9/11	Frame - F.S. 310.00	2024-T42 AL ALY Sheet	0 040 in
56	7-311113580-3/4	Frame - F.S. 320.00	2024-T42AL ALY Sheet	0.032 in
57	7-311113559-17119	Frame - F.S.330.00	2024-T42 AL ALY Sheet	0.032 in
58	7-311113600-3/4	Frame - F.S. 340.00	2024-T42 AL ALY Sheet	0.032 in
59	7-311113610-3/4	Frame - F.S.350.00	2024-T42 AL ALY Sheet	0.032 in
60	7-311113620-3/4	Frame - F.S. 360.00	2024-T42 AL ALY Sheet	0.032 in
61	7-311113599-719	Frame - F. S. 370.00	7075-T6 AL ALY Sheet	0.071in
62	7-311113519-3/5	Stringer 2 - W.L. 145.50	7075-T6 AL ALY Ext Tee	0.126 in
63	7-311113612-17/19	Stringer 3 - W.L. 139.34	7075-T6511AL ALY Ext Tee	0.090 in

Table 2-37. AH-64A Fuselage Frame Structure Material Chart - Cont

Item No.	Part Number	Nomenclature	Material	Thickness
64	7-311113512-21/23	Stringer 4- W.L.129.20	7075-T6511 AL ALY Ext Tee	0.090 in
65	7-311113612-25/26	Stringer 5- F.S.310.00 to F.S. 320.00	7075-T6511 ALY Ext Tee	0.090 in
66	7-311113512-27/65	Stringer 5, AFT F.S. 340.00	7075-T6511AL ALY Ext Tee	0.090 in
67	7-311113512-31/33	Stringer 6 - F.S. 280.00 to 450.50	7075-T6511AL ALY Ext Tee	0.090 in
68	7-311113512-35/37	Stringer 7- F.S. 280.00 to 450.50	7075-T6511 ALY Ext Tee	0.125 in
69	7-311113512-39/40 _	Stringer 8 - F.S. 280.00 to 450.50	7075-T6511AL ALY Ext Tee	0.125 in
70	7-311113512-41	Stringer 9, B.L. 0.00, Lower - F.S. 280.00 to 454.04	7075-T6511 ALY Ext Tee	0.125 in
71	7-311113512-43/123	Stringer 1, B.L. 0.00, Upper - F.S. 363.00 to 387.156	7075-T6511AL ALY Ext Tee	0.125 in
72	7-311113513-15/16	Longeron - F.S. 350.00 to 370.00	2024-T42 ALY Sheet	0.032 in
73	7-311113513-7/9	Stringer 2 - F.S. 280.00 to 370.00, W.L.145.50	7075-T6511AL ALY Ext Tee	0.090 in
74	7-311113640-314	Frame - F.S. 383.30	2024-T42 AL ALY Sheet	0.032 in
75	7-311113528-27	Support - T/R Driveshaft	2024-T42 AL ALY Sheet	0.040 in
76	7-311113528-29	Support - T/R Driveshaft	2024-T42 AL ALY Sheet	0.040 in
77	7-311113558-3/4	Frame - F.S.396.60	2024-T42 AL ALY Sheet	0.032 in
78	7-311113660-3/4	Frame - F.S. 409.90	2024-T42 ALY Sheet	0.032 in
79	7-311113670-3/4	Frame - F.S.423.20	7075-T6 AL ALY Sheet	0.040 in
80	7-311113680-3/4	Frame - F.S. 436.50	7075-T6AL ALY Sheet	0.050 in
81	7-311113516-3	Frame - F.S. 450.00	7075-T6 AL ALY Sheet	0.100 in
82	7-311114110-3	Frame - F.S.463.30	7076-T6AL ALY Sheet	0.040 in
83	7-311114120-3	Frame - F.S. 476.60	7075-T6 AL ALY Sheet	0.040 in
84	7-311114042-3	Frame - F.S.483.00	7075-T6 AL ALY Sheet	0.040in
85	7-311114130-3	Frame - F.S.489.90	7075-T6 AL ALY Sheet	0.040 in

Table 2-37. AH-64A Fuselage Frame Structure Material Chart - Cont

Item No.	Part Number	Nomenclature	Material	Thickness
86	7-311114043-3	Frame - F.S. 496.00	7075-T6 AL ALY Sheet	0.040 in
87	7-311114140-3	Frame - F.S. 503.20	7075-T6 AL ALY Sheet	0.040 in
88	7-311114150-3	Frame - F.S. 516.50	7075-T AL ALY Sheet	0.040 in
89	7-311114044-3	Frame - F.S. 523.00	7075-T6 AL ALY Sheet	0.040 in
90	7-311114160-5/27	Frame - F.S. 530.09	2024-T42 AL ALY Sheet	0.071 in
91	7-311114178-3	Frame - F.S. 547.15	7149-T7352 AL ALY Hand Forging	0.160 in
92	7-311113512-45	Stringer 1 - B.L. 0.00, Upper - F.S. 387.156 - 450.00	7075-T6511 AL ALY Ext Tee	0.125 in
93	7-311113803-1/2	Stringer 2, Left and Right - F.S. 370.00 - 476.00	7075-T6511 AL ALY Ext Tee	0.380 in
94	7-311114181-11	Stringer 1, B.L. 0.00, Upper - F.S. 450.00 to 530.09	7075-T6511 AL ALY Ext Tee	0.100 in
95	7-311114181-15/16	Stringer 2, Left and Right - F.S. 474.72 to 530.090	7075-T6511 AL ALY Ext Tee	0.090 in
96	7-311114181-7/12	Stringer 3, Left and Right - F.S. 450.00 to 547.00	7075-T6511 AL ALY Ext Tee	0.090 in
97	7-311114181-5/6	Stringer 4, Left and Right - F.S. 450.00 to 547.00	7075-T6511 AL ALY Ext Tee	0.090 in
98	7-311114181-9/10	Stringer 6, Left and Right - F.S. 450.00 to 547.00	7075-T6511 AL ALY Ext Tee	0.090 in
99	7-311114181 -17/18/19/20	Stringer 2, Left and Right - F.S. 532.14 to 546.03	7075-T6511 AL ALY Ext Tee	0.090 in
100	7-311114181-3/4	Stringer 7, Left and Right - F.S. 450.00 to 547.00	7075-T6511 AL ALY Ext Tee	0.100 in
101	7-311114181-13	Stringer 9, B.L. 0.00, Lower - F.S. 450.00 to 547.00, B.L. 0.00	7075-T6511 AL ALY Ext Tee	0.100 in
102	7-311114182	Support, Upper, TLG	7149-T7351 AL ALY Plate	0.100 in

NOTE

Refer to Figure 2-53.

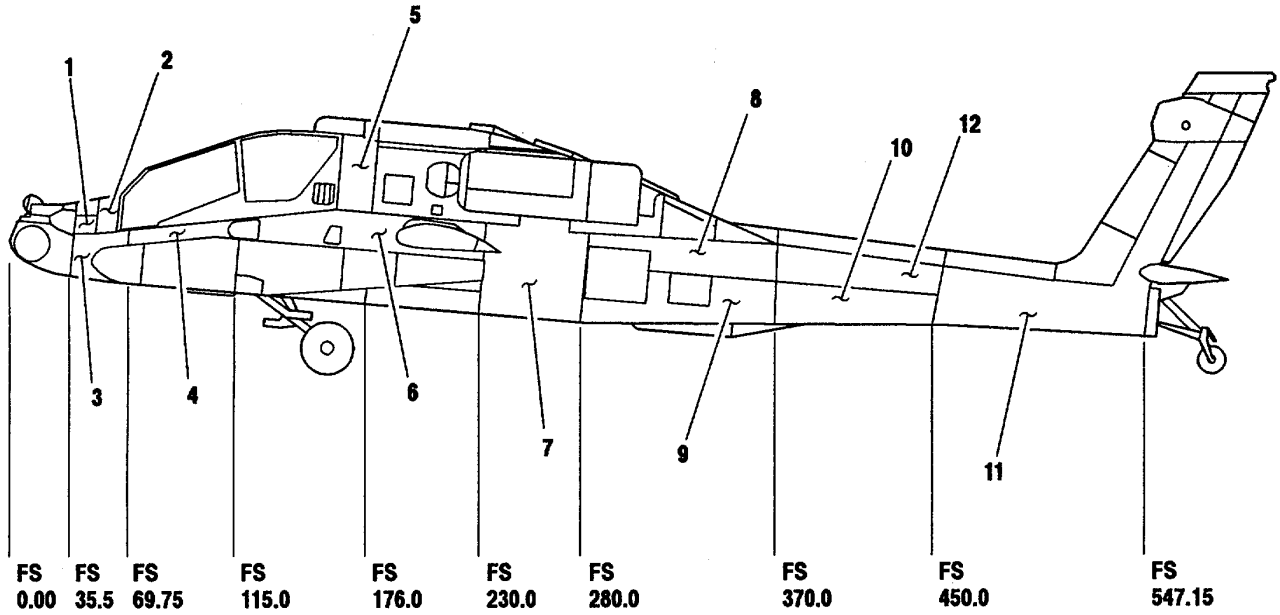

Figure 2-54. Fuselage Skin Plates

Table 2-38. Fuselage Skin Plates Material Chart

Item No.	Part Number	Nomenclature	Material	Thickness
1	7-311111090-13/14	Skin	2024-T42 AlClad ALY Sheet	0.032 in
2	7-311111090-11	Skin	2024-T42 AlClad ALY Sheet	0.032 in
3	7-311111090-3/5	Skin	2024-T42 AlClad ALY Sheet	0.032 in
	7-311111090-79/81	Skin	7075-T6 AlClad ALY Sheet	0.050 in
4	7-311111090-7/9	Skin	2024-T42 AlClad ALY Sheet	0.050 in
5	7-311113490-3/4	Skin	2024-T42 AlClad ALY Sheet	0.040 in
6	7-311113880-3/5	Skin	2024-T3 AlClad ALY Sheet	0.071 in
7	7-311113280-7/9	Skin	2024-T3 AlClad ALY Sheet	0.032 in
8	7-311113512-7/8	Skin	2024-T42 AlClad ALY Sheet	0.032 in
	7-311113512-73/74	Skin	2024-T42 AlClad ALY Sheet	0.032 in
	7-311113512-75/76	Skin	2024-T3 AlClad ALY Sheet	0.032 in
9	7-311113512-9/11	Skin	2024-T3 AlClad ALY Sheet	0.032 in
10	7-311113512-15/16	Skin	2024-T3 AlClad ALY Sheet	0.032 in
11	7-311114180-41/43	Skin	2024-T3 AlClad ALY Sheet	0.063 in
12	7-311113512-13/14	Skin	2024-T3 AlClad ALY Sheet	0.032 in
	7-311113512-87/88	Skin	2024-T3 AlClad ALY Sheet	0.071 in

NOTE

Refer to Figure 2-54.

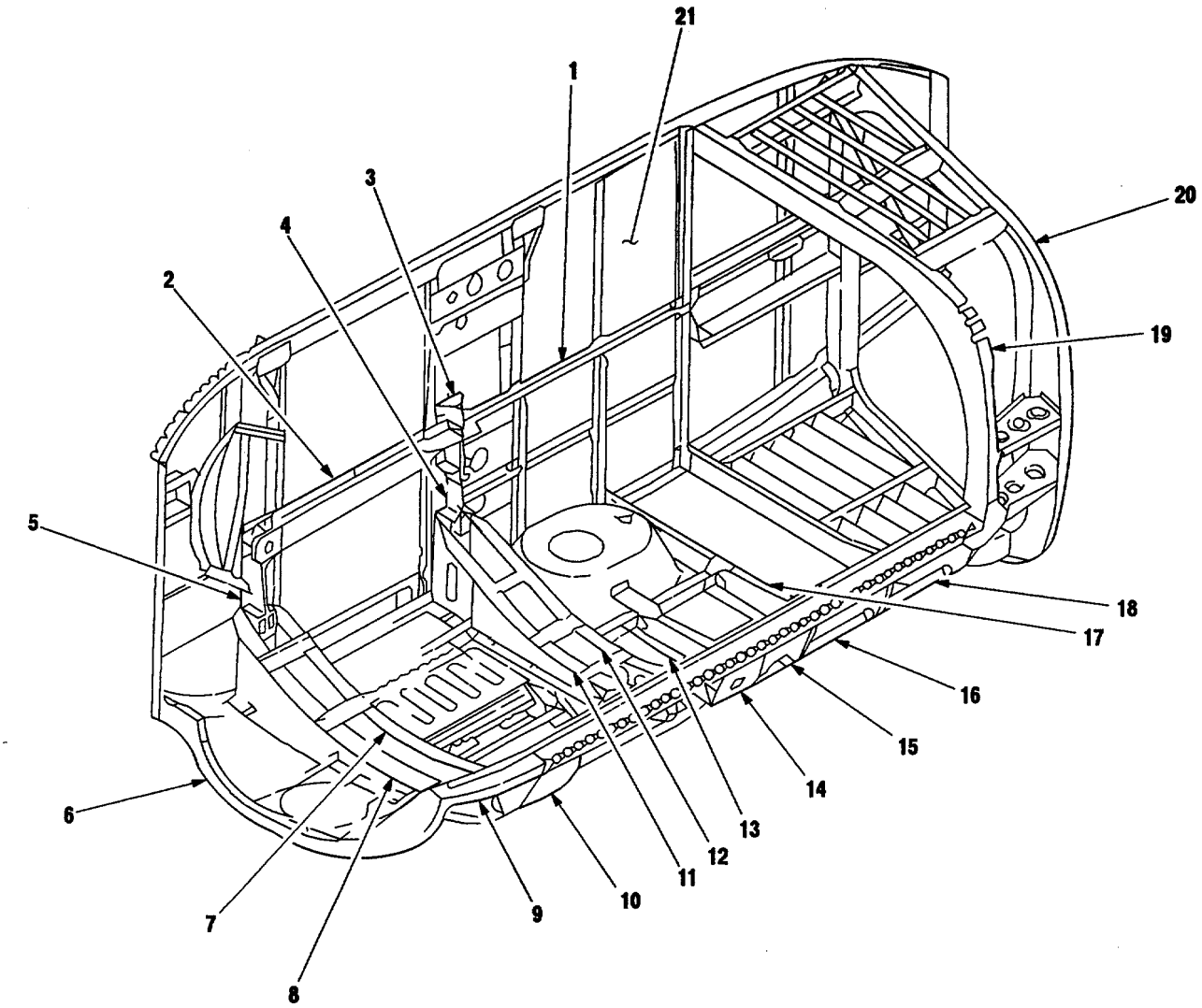

M102-083

Figure 2-55. Nacelle Structure

Table 2-39. Nacelle Structure Material Chart

Item No.	Part Number	Nomenclature	Material	Thickness
1	7-311140135-3	Longeron - Engine Mount	6AL-4V Titanium Bar	1.50 in
2	7-311140134-9/10	Longeron	7149-T7351 AL ALY Rolled Plate	2.0 in
3	7-111260097-1/2	Fitting - Upper Engine Mount	6AL-4V Titanium Plate	1.50 in
4	7-111260098-3/4	Fitting - Lower Engine Mount	7149-T7352 AL ALY Forged Bar	2.0 in
5	7-311140047-1/2/3/4	Fitting - Engine Mount, F.S. 230.0	7149-T7352 AL ALY Forged Billet	1.80 in
6	7-111260060-3/4	Frame - Nacelle, F.S. 219.81	2024-T42 AL ALY Sheet	0.050 in
7	7-311140138-15/16	Channel - Frame Assembly	2024-T42 AL ALY Sheet	0.080 in
8	7-311140138-17/18	Channel - Frame Assembly	2024-T42 AL ALY Sheet	0.080 in
9	7-211140146-1/2	Longeron - Outboard Engine Nacelle	2024-T42 AL ALY Sheet	0.063 in
10	7-311140163-1/2	Hinge - Outboard Longeron	Ext Angle: AL ALY	0.050 in
11	7-311140139-9/10	Channel - Frame Assembly	2024-T42 AL ALY Sheet	0.080 in
12	7-311140139-7/11	Channel - Frame Assembly	2024-T42 AL ALY Sheet	0.080 in
13	7-311140111	Frame - Nacelle, F.S. 254.56	2024-T42 AL ALY Sheet	0.040 in
14	7-111260258-3/4	Aft Bumper - Work Platform	2024-T42 AL ALY Sheet	0.040 in
15	7-111260187-1/2	Stringer - F.S. 247.00 - 254.00	2024-T42 AL ALY Sheet	0.032 in
16	7-111260194-1/2	Stringer - F.S. 254.00 - 262..00	2024-T42 AL ALY Sheet	0.032 in
17	7-311140044-BSC	Frame - Nacelle, F.S. 262.00	2024-T42 AL ALY Sheet	0.040 in
18	7-111260196-1/2	Stringer - F.S. 262.00 - 270.00	2024-T42 AL ALY Sheet	0.040 in
19	7-211140131-3/4	Frame - Nacelle, F.S. 270.00	2024-T42 AL ALY Sheet	0.100 in
20	7-311140181-5/6	Frame - Canted, F.S. 284.50	2024-T42 AL ALY Sheet	0.050 in
21	7-311140132-3/4	Web - Firewall Assembly	Titanium Sheet	0.016 in
NOTE Refer to Figure 2-55.				

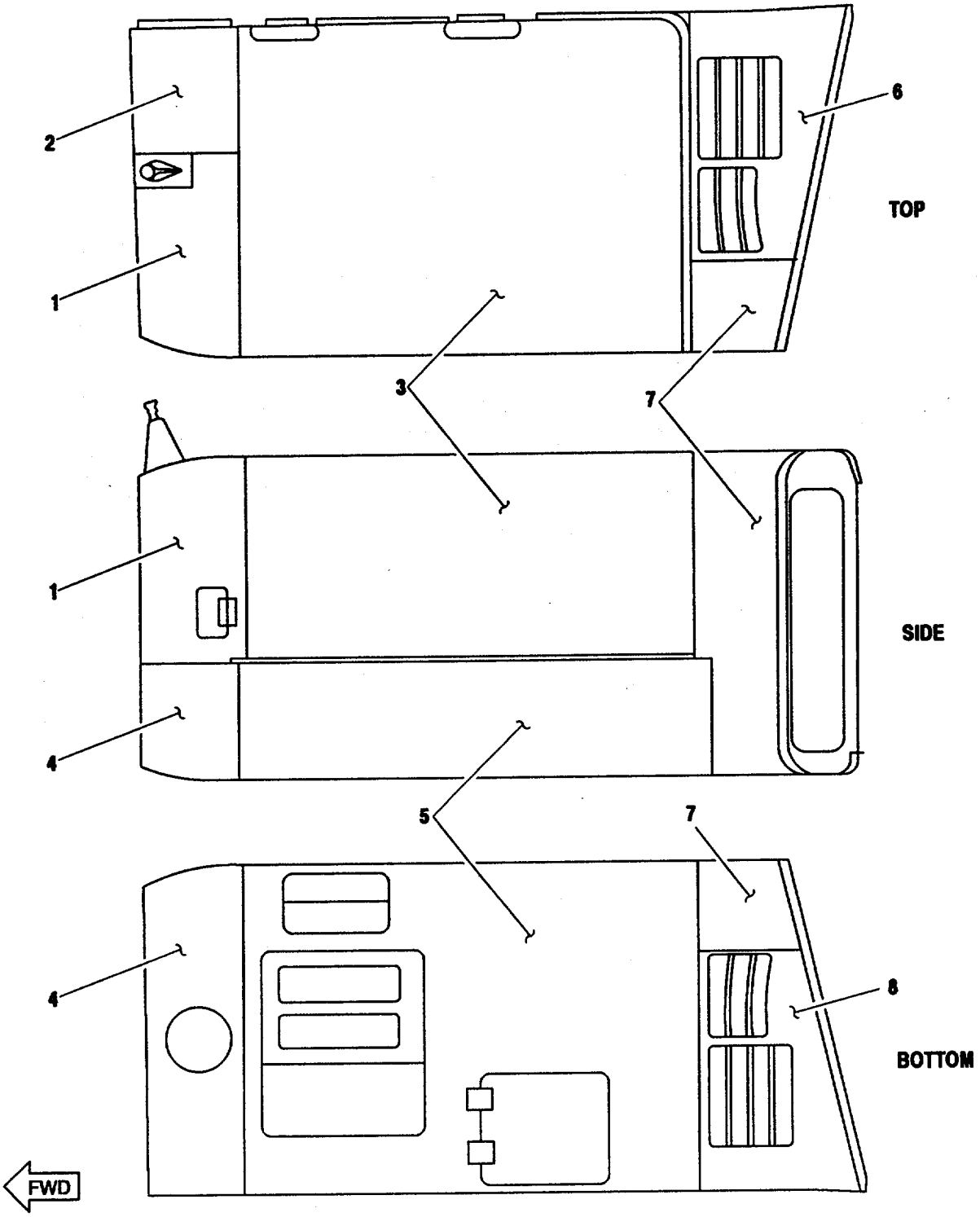

Figure 2-56. Nacelle Skin Plates

Table 2-40. Nacelle Skin Plates Material Chart

Item No.	Part Number	Nomenclature	Material	Thickness
1	7-311140130-5/6	Skin	2024-T42 AlClad ALY Sheet	0.020 in
2	7-311140130-7/8	Skin	2024-T42 AlClad ALY Sheet	0.020 in
3	7-311140130-3/4	Skin	7075-T6 AlClad ALY Sheet	0.020 in
4	7-311140110-3/4	Skin	2024-T3 AL ALY Sheet	0.020 in
5	7-311140110-5/6	Skin	2024-T3 AL ALY Sheet	0.020 in
6	7-311140180-3/4	Skin	2024-T42 AL ALY Sheet	0.020 in
7	7-311140180-5/6	Skin	2024-T42 AL ALY Sheet	0.020 in
8	7-311140180-7/8	Skin	2024-T42 AL ALY Sheet	0.020 in
NOTE Refer to Figure 2-56.				

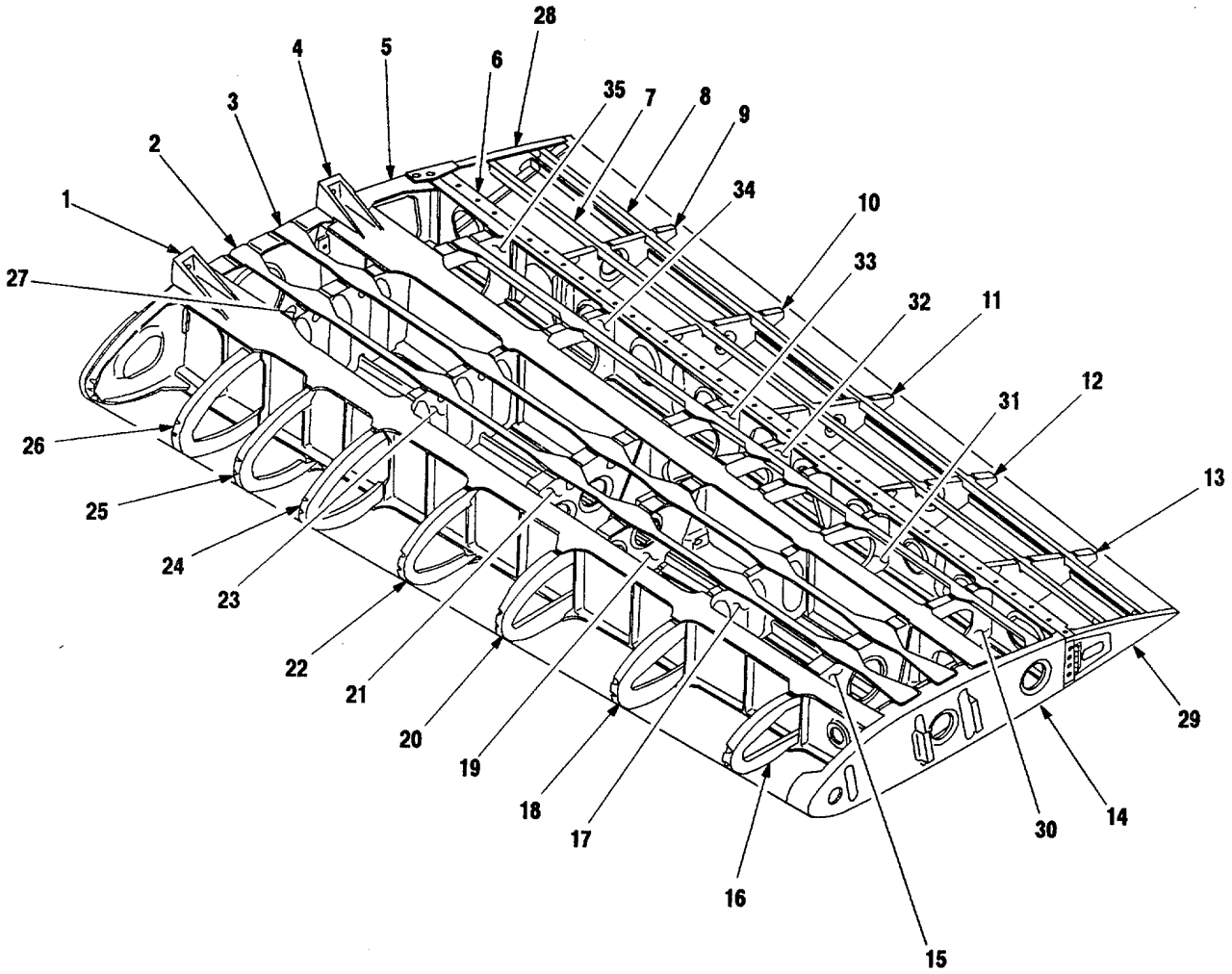

Figure 2-57. Wing Structure

Table 2-41. Wing Structure Material Chart

Item No.	Part Number	Nomenclature	Material	Thickness
1	7-311130220-1/2/3/4	Spar, Forward	7149-T7352 AL ALY Plate	0.170 in
2	7-311130230-15/16	Stringer	7075-T73511 Ext	0.090 in
3	7-311130230-17/18	Stringer	7075-T73511 Ext	0.090 in
4	7-311130250-1/2/3/4	Spar, Aft	7149-T7351 AL ALY Plate	0.160 in
5	7-311130224-1/2	Rib - B.L. 24.130	2024-T42 AL ALY Sheet	0.063 in
6	7-311130040-7/8	Spar, Auxiliary	2024-T42 AL ALY Sheet	0.040 in
7	7-311130290-11/12	Stringer, Upper Trailing Edge	2024-T42 AL ALY Sheet	0.025 in
8	7-311130290-13/14	Stringer, Upper Trailing Edge	2024-T42 AL ALY Sheet	0.025 in
9	7-311130290-23/24	Rib, Trailing Edge - B.L. 36.95	2024-T42 AL ALY Sheet	0.025 in
10	7-311130290-25/26	Rib, Trailing Edge - B.L. 49.25	2024-T42 AL ALY Sheet	0.025 in
11	7-311130290-27/28	Rib, Trailing Edge - B.L. 61.25	2024-T42 AL ALY Sheet	0.025 in
12	7-311130290-29/30	Rib, Trailing Edge - B.L. 73.50	2024-T42 AL ALY Sheet	0.025 in
13	7-311130290-31/32	Rib, Trailing Edge - B.L. 85.75	2024-T42 AL ALY Sheet	0.025 in
14	7-311130298-3/4	Rib, - B.L. 98.00	2024-T42 AL ALY Sheet	0.032 in
15	7-311130090-3/4	Rib, Center - B.L. 90.00	2024-T42 AL ALY Sheet	0.063 in
16	7-311130090-5/6	Rib, Forward - B.L. 90.00	2024-T42 AL ALY Sheet	0.032 in
17	7-311130078-3/4	Rib, Center - B.L. 78.00	2024-T42 AL ALY Sheet	0.040 in
18	7-311130078-5/6	Rib, Aft - B.L. 78.00	2024-T42 AL ALY Sheet	0.032 in
19	7-311130266-5/6	Rib, Center - B.L. 66.00	2024-T42 AL ALY Sheet	0.063 in
20	7-311130266-3/4	Rib, Forward - B.L. 66.00	2024-T42 AL ALY Sheet	0.040 in
21	7-311130060-3/4	Rib, Center - B.L. 60.00	2024-T42 AL ALY Sheet	0.063 in
22	7-311130270-13/14	Rib, Forward - B.L. 56.00	2024-T42 AL ALY Sheet	0.032 in

Table 2-41. Wing Structure Material Chart - Cont

Item No.	Part Number	Nomenclature	Material	Thickness
23	7-311130046-3/4	Rib, Center - B.L. 46.00	2024-T42 AL ALY Sheet	0.040 in
24	7-311130046-5/6	Rib, Forward - B.L. 46.00	2024-T42 AL ALY Sheet	0.032 in
25	7-311130270-11/12	Rib, Forward - B.L. 39.00	2024-T42 AL ALY Sheet	0.032 in
26	7-311130233-5/6	Rib, Forward - B.L. 33.00	2024-T42 AL ALY Sheet	0.032 in
27	7-311130233-3/4	Rib, Center - B.L. 33.00	2024-T42 AL ALY Sheet	0.040 in
28	7-311130290-21/22	Rib, Trailing Edge - B.L. 24.13	2024-T42 AL ALY Sheet	0.032 in
29	7-311130290-49/50	Rib, Trailing Edge - B.L. 98.00	2024-T42 AL ALY Sheet	0.032 in
30	7-311130290-7/8	Rib, aft - B.L. 90.00	2024-T42 AL ALY Sheet	0.032 in
31	7-311130078-7/8	Rib, aft - B.L. 78.00	2024-T42 AL ALY Sheet	0.032 in
32	7-311130266-7/8	Rib, aft - B.L. 66.00	2024-T42 AL ALY Sheet	0.040 in
33	7-311130060-5/6 -23/24	Rib, aft - B.L. 60.00	2024-T42 AL ALY Sheet	0.032 in
34	7-311130046-7/8	Rib, aft - B.L. 46.00	2024-T42 AL ALY Sheet	0.032 in
35	7-311130233-7/8	Rib, aft - B.L. 33.00	2024-T42 AL ALY Sheet	0.032 in
NOTE Refer to Figure 2-57.				

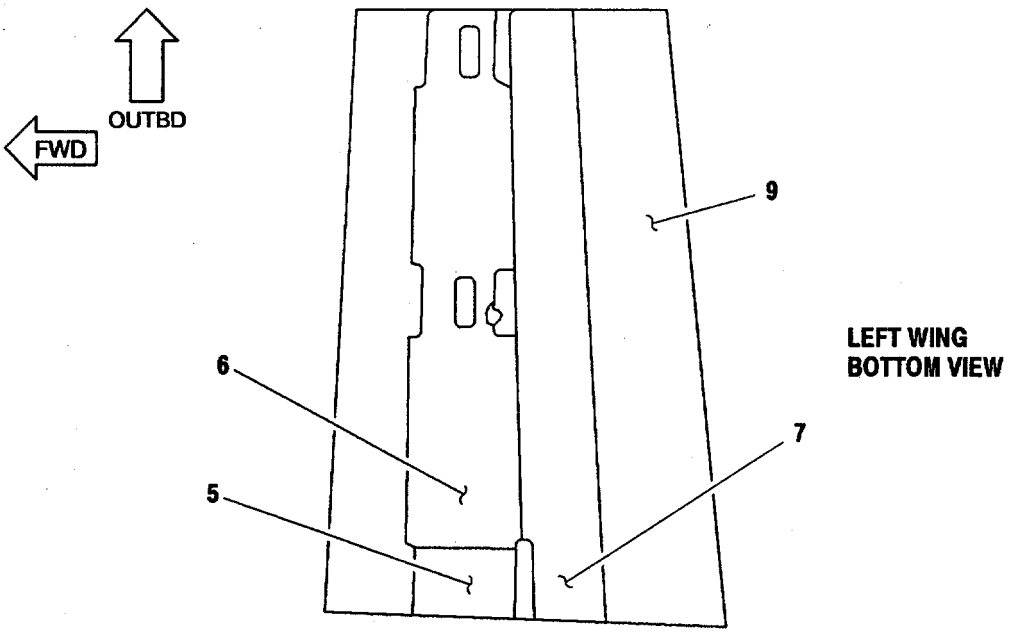

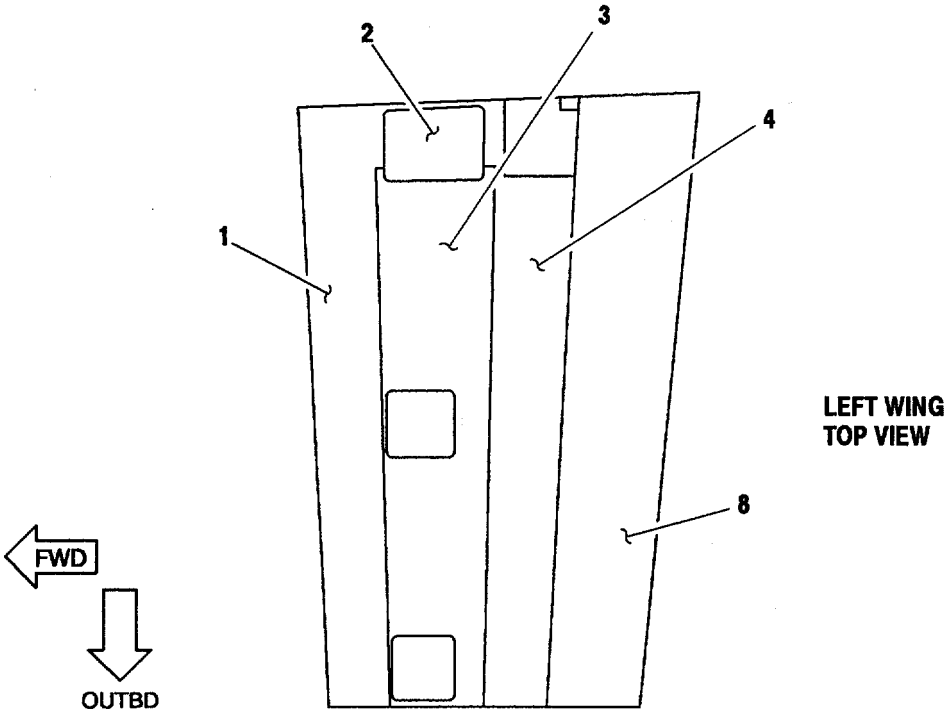

Figure 2-58. Wing Skin Plates

Table 2-42. Wing Skin Plates Material Chart

Item No.	Part Number	Nomenclature	Material	Thickness
1	7-311130270-9	Skin	2024-T42 AlClad ALY Sheet	0.032 in
2	7-311130230-5	Skin	2024-T3 AlClad ALY Sheet	0.071 in
3	7-311130230-3	Skin	2024-T3 AlClad ALY Sheet	0.040 in
4	7-311130230-23	Skin	2024-T3 AlClad ALY Sheet	0.025 in
5	7-311130210-3	Skin	2024-T3 AlClad ALY Sheet	0.032 in
6	7-311130210-7	Skin	2024-T3 AlClad ALY Sheet	0.063 in
7	7-311130210-9	Skin	2024-T3 AlClad ALY Sheet	0.025 in
8	7-311130290-7	Skin	2024-T3 AlClad ALY Sheet	0.016 in
9	7-311130290-5	Skin	2024-T3 AlClad ALY Sheet	0.016 in
NOTE Refer to Figure 2-58.				

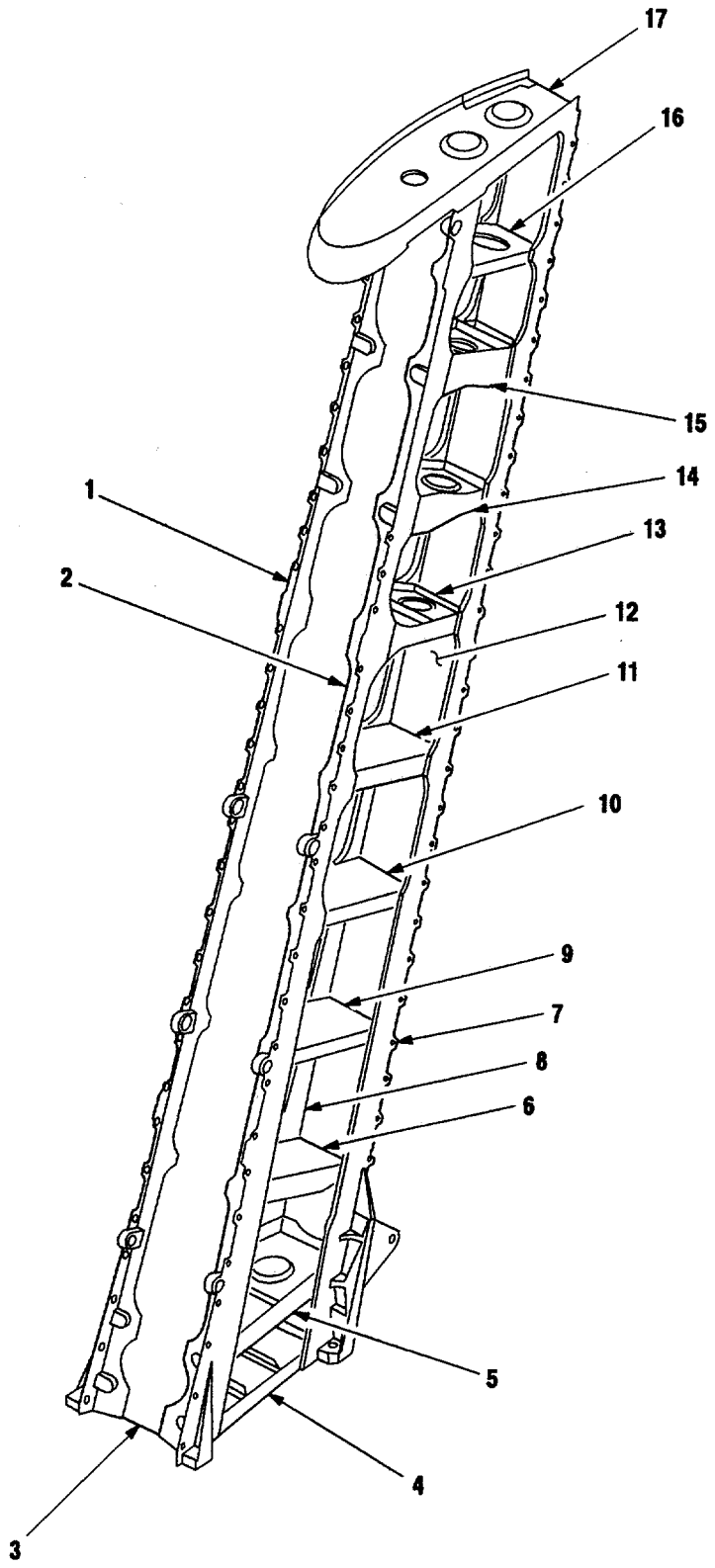

Figure 2-59. Vertical Stabilizer Frame Structure

Table 2-43. Vertical Stabilizer Frame Material Chart

Item No.	Part Number	Nomenclature	Material	Thickness
1	7-311122603-5/9/13	Spar Cap, Forward	7149-T7352 AL ALY Forging	0.140 in
2	7-311122603-3/7/11	Spar Cap, Forward	7149-T7352 AL ALY Forging	0.140 in
3	7-311122602-3	Web, Front	2024-T3 AL ALY Sheet	0.050 in
4	7-311122606-5	Rib, Lower Closing	2024-T42 AL ALY Sheet	0.063 in
5	7-311122607-3	Rib, Intermediate Gearbox-V.T.F.S. 21.338	7149-T7352 AL ALY Forging	0.120 in
6	7-311122608-5	Rib - V.T.F.S. 32.625	2024-T42 AL ALY Sheet	0.050 in
7	7-311122605-5	Spar Cap, Left Hand, Rear	7149-T7351 AL ALY Rolled Plate	0.140 in
8	7-311122605-3	Spar Cap, Right Hand, Rear	7149-T7351 AL ALY Rolled Plate	0.140 in
9	7-311122609-5	Rib Web - V.T.F.S. 43.375	2024-T42 AL ALY Sheet	0.050 in
10	7-311122610-5	Rib Web - V.T.F.S. 54.125	2024-T42 AL ALY Sheet	0.050 in
11	7-311122611-5	Rib Web - V.T.F.S. 64.875	2024-T42 AL ALY Sheet	0.050 in
12	7-311122604-3/13	Web, Rear	2024-T3 AL ALY Sheet	0.050 in
13	7-311122612-3	Rib - V.T.F.S. 75.625	7149-T7352 AL ALY Forging	0.090 in
14	7-311122613-3	Rib, Tail Rotor Gearbox - V.T.F.S. 85.559	7149-T7352 AL ALY Forging	0.090 in
15	7-311122614-3	Rib - V.T.F.S. 96.559	7149-T7352 AL ALY Forged Plate	0.090 in
16	7-311122615-3	Rib - V.T.F.S. 105.00	2024-T42 AL ALY Sheet	0.040 in
17	7-311122616-3/21	Rib, Upper Closing - V.T.F.S. 111.406	2024-T42 AL ALY Sheet	0.040 in
NOTE Refer to Figure 2-59.				

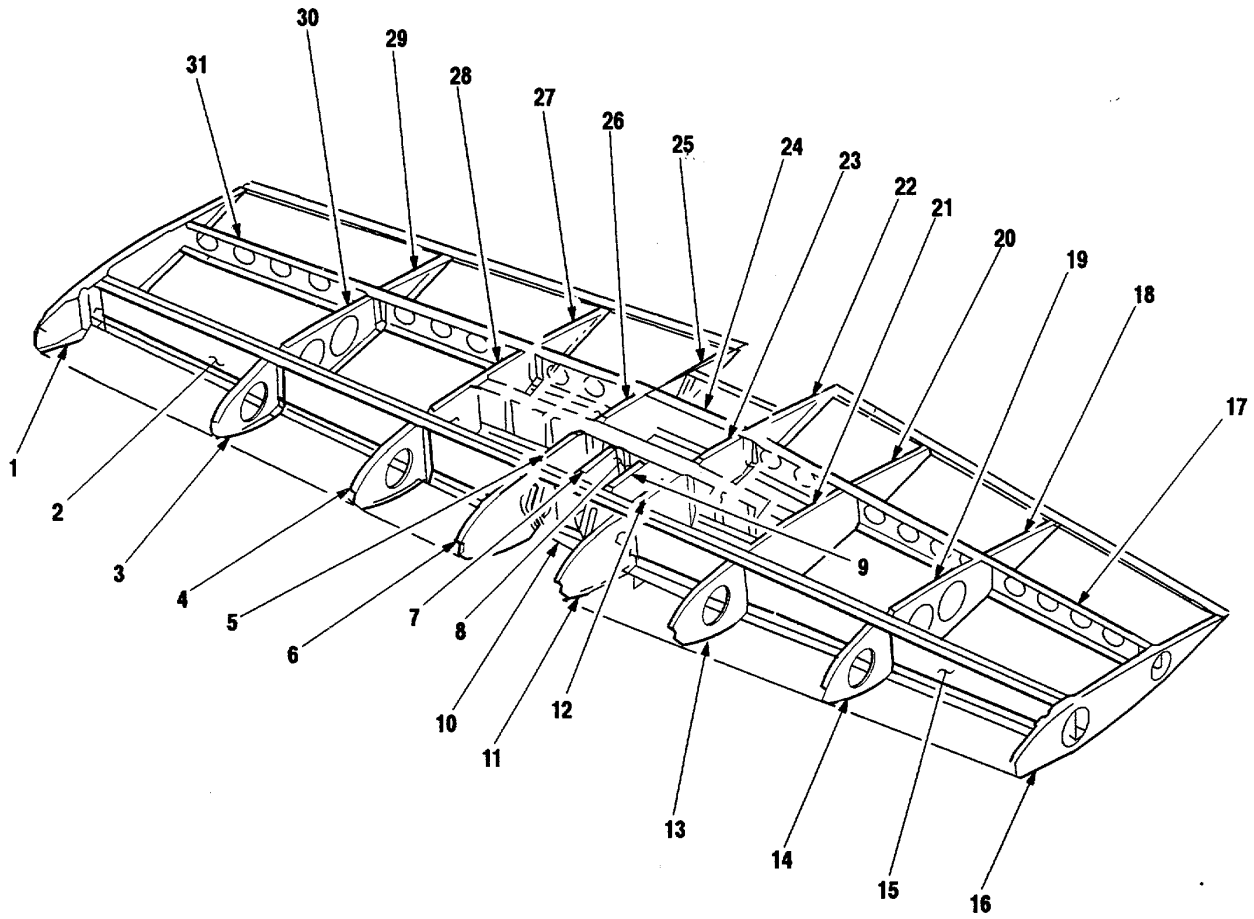

Figure 2-60. Horizontal Stabilator Frame Structure

Table 2-44. Horizontal Stabilator Frame Material Chart

Item No.	Part Number	Nomenclature	Material	Thickness
1	7-311123610-3	Rib, Outboard - R.B.L. 64.00	2024-T42 AIClad ALY Sheet	0.032 in
2	7-311123602-3	Spar, Right Web - Fwd	2024-T3 AL ALY Sheet	0.016 in
3	7-211123609-3	Rib, Fwd - R.B.L. 40.00	2024-T42 AL ALY Sheet	0.032 in
4	7-211123608-3	Rib, Fwd - R.B.L. 21.00	2024-T42 AL ALY Sheet	0.032 in
5	7-311123607-5	Rib, Fwd Center - R.B.L. 5.668	2024-T42 AL ALY Sheet	0.032 in
6	7-311123607-3	Rib, Fwd - R.B.L. 5.668	2024-T42 AL ALY Sheet	0.032 in
7	7-311123611-3	Rib - R.B.L. 3.50	2024-T42 AL ALY Sheet	0.032 in
8	7-311123606-3	Spar Web - Center	2024-T3 AL ALY Sheet	0.032 in
9	7-311123617-3	Rib - L.B.L. 3.31	2024-T42 AL ALY Sheet	0.040 in
10	7-311123623-9	Fitting, Pivot	6AL-4V Titanium ALY Plate	0.100 in
11	7-311123607-3	Rib, Fwd - L.B.L. 5.668	2024-T42 AL ALY Sheet	0.032 in
12	7-311123607-5	Rib, Fwd Center - L.B.L. 5.668	2024-T42 AL ALY Sheet	0.032 in
13	7-211123608-3	Rib, Fwd - L.B.L. 21.00	2024-T42 AL ALY Sheet	0.032 in
14	7-211123609-3	Rib, Fwd - L.B.L. 40.00	2024-T42 AL ALY Sheet	0.032 in
15	7-311123602-3	Spar, Left Web - Fwd	2024-T3 AL ALY Sheet	0.016 in
16	7-311123610-3	Rib, Outboard - L.B.L. 64.00	2024-T42 ALClad ALY Sheet	0.032 in
17	7-211123605-3	Spar, Left Outboard - Aft	2024-T42 AL ALY Sheet	0.040 in
18	7-211123609-7	Rib, Aft - L.B.L. 40.00	2024-T42 AL ALY Sheet	0.032 in
19	7-211123609-5	Rib, Center - L.B.L. 40.00	2024-T42 AL ALY Sheet	0.032 in
20	7-211123608-7	Rib, Aft - L.B.L. 21.00	2024-T42 AL ALY Sheet	0.032 in
21	7-211123608-5	Rib, Center - L.B.L. 21.00	2024-T42 AL ALY Sheet	0.032 in
22	7-311123607-9	Rib, Aft - L.B.L. 5.668	2024-T42 AL ALY Sheet	0.032 in
23	7-311123607-7	Rib, Aft Center - L.B.L. 5.668	2024-T42 AL ALY Sheet	0.032 in
24	7-211123605-7	Spar, Inboard - Aft	2024-T42 AL ALY Sheet	0.040 in
25	7-311123607-9	Rib, Aft - R.B.L. 5.668	2024-T42 AL ALY Sheet	0.032 in
26	7-311123607-7	Rib, Aft Center - R.B.L. 5.668	2024-T42 AL ALY Sheet	0.032 in

Table 2-44. Horizontal Stabilator Frame Material Chart - Cont

Item No.	Part Number	Nomenclature	Material	Thickness
27	7-211123608-7	Rib, Aft - R.B.L. 21.00	2024-T42 AL ALY Sheet	0.032 in
28	7-211123608-5	Rib, Center - R.B.L. 21.00	2024-T42 AL ALY Sheet	0.032 in
29	7-211123609-7	Rib, Aft - R.B.L. 40.00	2024-T42 AL ALY Sheet	0.032 in
30	7-211123609-5	Rib, Center - R.B.L. 40.00	2024-T42 AL ALY Sheet	0.032 in
31	7-211123605-3	Spar, Right Outboard - Aft	2024-T42 AL ALY Sheet	0.040 in
NOTE Refer to Figure 2-60.				

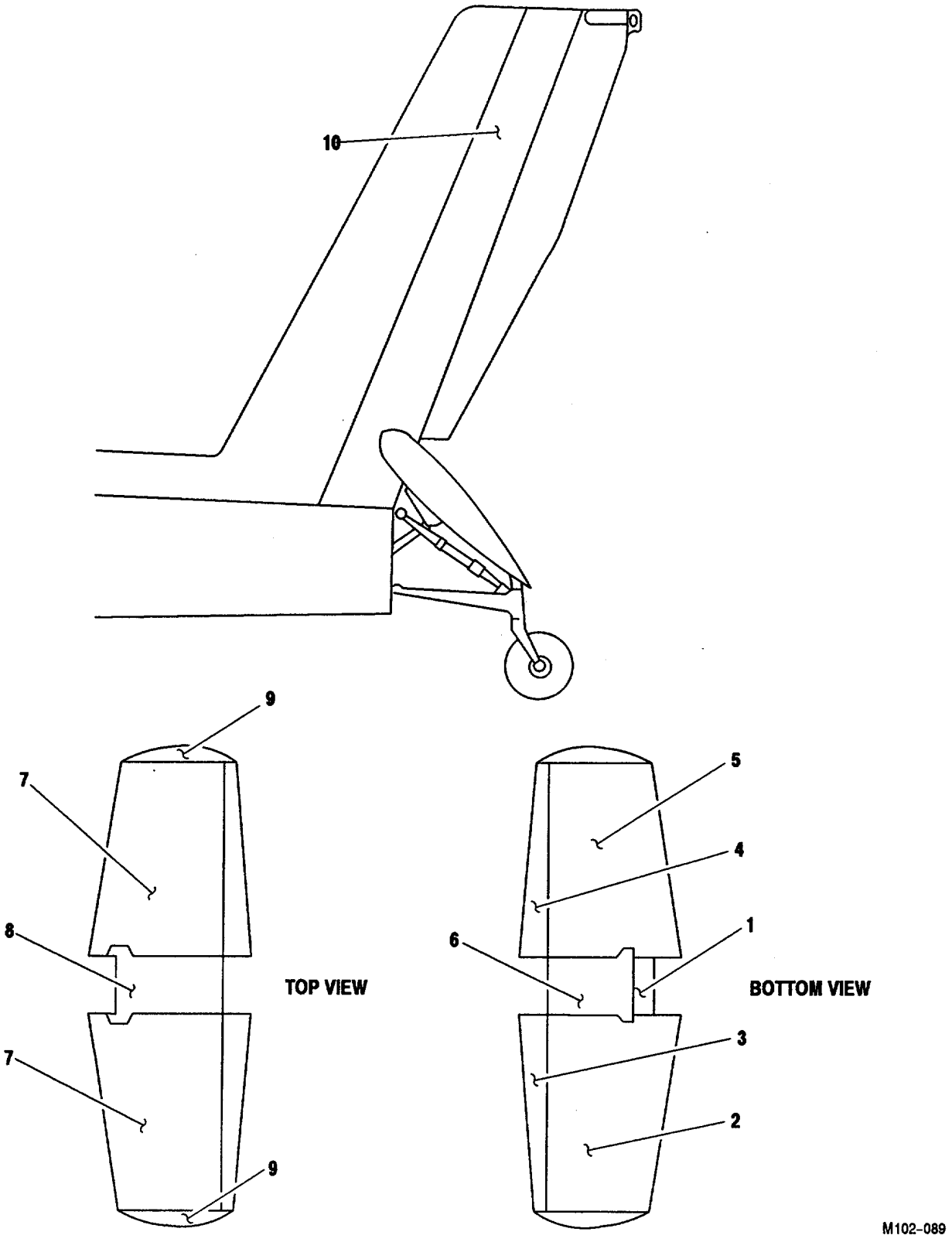

Figure 2-61. Vertical Stabilizer/Horizontal Stabilator Skin Plates

Table 2-45. Vertical Stabilizer/Horizontal Stabilator Skin Plates Material Chart

Item No.	Part Number	Nomenclature	Material	Thickness
1	7-311123600-7	Skin	2024-T3 AlClad ALY Sheet	0.025 in
2	7-311123600-17	Skin	2024-T3 AlClad ALY Sheet	0.025 in
3	7-311123600-5	Skin	2024-T42 AlClad ALY Sheet	0.025 in
4	7-311123600-19	Skin	2024-T42 AlClad ALY Sheet	0.025 in
5	7-311123600-21	Skin	2024-T3 AlClad ALY Sheet	0.025 in
6	7-311123618-9	Doubler	2024-T3 AlClad ALY Sheet	0.063 in
7	7-311123600-3	Skin	2024-T3 AlClad ALY Sheet	0.025 in
8	7-311123618-7	Doubler	2024-T3 AlClad ALY Sheet	0.063 in
9	7-311123612-3	Shell - Tip Fairing	Prepreg Kevlar Fabric	3 Plies
10	7-311122601-3/4	Skin	2024-T3 AlClad ALY Sheet	0.050 in
NOTE Refer to figure 2-61.				

CHAPTER 3
LANDING GEAR SYSTEM

BDAR TM PROCEDURES. THE EXPEDIENT REPAIR PROCEDURES IN BDAR TM ARE FOR USE IN COMBAT ONLY. STANDARD MAINTENANCE/REPAIR PROCEDURES ARE TO BE USED AS SOON THEREAFTER AS POSSIBLE.

3-1. SCOPE.

This chapter contains description, location, serviceability criteria, and cannibalization criteria for the landing gear system. Repair of battle damage to the landing gear system during combat may be deferrable depending on the damage or component function.

3-2. SYSTEM DESCRIPTION AND LOCATION.

The landing gear system consists of the Main Landing Gear (MLG) subsystem, Tail Landing Gear (TLG) subsystem, and the brake subsystem. Refer to TM 1-1520-238-T for detailed description and operation of specific landing gear components.

3-2.1. MLG Subsystem (Figure 3-1). The MLG subsystem consists of the following: cross tube, left and right trailing arm, left and right shock strut, and the left and right wheel and tire. The left and right MLG assemblies are attached to the cross tube, which is mounted through the lower portion of the center fuselage and the upper pivot mount (F.S. 120).

3-2.2. TLG Subsystem (Figure 3-2). The TLG subsystem consists of the following: left and right trailing arm, shock strut, tail wheel lock actuator, fork and wheel centering mechanism, and the wheel and tire. The TLG is mounted to the tailboom (F.S. 547.15).

3-2.3. Brake Subsystem (Figure 3-3). The brake subsystem consists of the following: pilot and CPG master cylinders, transfer valves, parking brake valve, and the left and right wheel brake assembly. A master cylinder is mounted to each directional control pedal located in the pilot and CPG cockpits. The transfer valves are both mounted between the pilots directional pedals and the parking brake valve is located forward and below the transfer valves. The wheel brake assemblies are mounted to the left and right MLG trailing arm axle.

3-3. ASSESSMENT PROCEDURE.

The components of the landing gear system are susceptible to ballistic damage or operationally induced damage such as hard landings. Assess damage to determine if repair or cannibalization is necessary. Types of major damage that may be encountered during assessment are gouges, nicks, holes, bends, distortions, creases, and dents.

3-4. SERVICEABILITY CRITERIA.

Serviceability criteria provides each landing gear subsystem with general and specific criteria. When a structural component is damaged and the serviceability criteria for the specific type of damage is not presented, TM 1-1520-238-23 inspection criteria shall be utilized. When a non-structural component is damaged, most instances will result in deferred repair. When any damage is deferred, periodic inspections shall be performed to monitor damage growth. Operational damage such as hard landings is difficult to recognize and determine. To determine landing gear system component serviceability, make the following checks:

a. Inspect MLG shock struts for:
   (1) Damage to exposed stroking portion of piston.
   (2) Damaged servicing fittings.
   (3) Fluid leakage.

b. Inspect MLG wheels and tires for:
   (1) Warped or distorted wheel.
   (2) Flat tire.

c. Inspect TLG shock strut for:
   (1) Damage to exposed stroking portion of piston.

(2) Damaged servicing fittings.
(3) Fluid leakage.

d. Inspect TLG wheel and tire for:
(1) Warped or distorted wheel.
(2) Flat tire.

e. Inspect TLG trailing arms for:
(1) Bent or twisted arms.
(2) Cracked or broken attachment areas.

If the above components look acceptable by visual inspection, consider the component serviceable and/or acceptable for cannibalization. Table 3-1 provides landing gear system components expanded combat damage criteria for a functional landing gear system (struts still stroke and tires rotate). A 100 flight hour deferment may be granted if damage does not exceed these limits.

If any major component of the landing gear system is damaged beyond the limits of Table 3-1, even to the point of being non-functional, a one-time emergency flight deferment may be granted provided the restrictions in paragraph 2-38 are observed and a soft (6 2 ft/ second sink speed) three-point landing is made at the conclusion of the flight. However, if the helicopter is canted laterally greater than 12 degrees, replace damaged shock strut.

Table 3-1. Landing Gear System Components Expanded Combat Damage Criteria

Nomenclature/ Part Number	Gouges and Holes	Smooth Dents and Bends	Sharp Creases and Bends	Paint Scratches	Nicks and Scratches
MLG Cross Tube 7-211113134 (Figure 3-1)	<0.030 inch deep acceptable	<0.058 inch deep acceptable	None allowed	Acceptable	<0.030 inch deep acceptable
MLG Trailing Arm 1168320-101 (LH) 1168320-102 (RH) (Figure 3-1)	<0.030 inch deep acceptable	<0.050 inch deep acceptable	None allowed	Acceptable	<0.030 inch deep acceptable
Cylinder 1168602-1 (P/O TLG Shock Strut Assembly 1168600-505) (Figure 3-2)	Not acceptable	<0.185 inch deep acceptable	None allowed	Acceptable	<0.030 inch deep acceptable
Upper Piston Assembly 1168603-103 (P/O TLG Shock Strut Assembly 1168600-505) (Figure 3-2)	Not acceptable	<0.100 inch deep acceptable	None allowed	Acceptable	<0.030 inch deep acceptable
Lower Piston Assembly 1168630-103 (P/O TLG Shock Strut Assembly 1168600-505) (Figure 3-2)	Not acceptable	<0.100 inch	None allowed	Acceptable	<0.030 inch deep acceptable
TLG Arm and Socket 1168851-101 (Figure 3-2)	<0.030 inch deep acceptable	<0.850 inch deep flange damage acceptable.	None allowed	Acceptable	<0.030 inch deep acceptable
Web Area of I-Beam Section (P/O TLG Arm and Socket) (Figure 3-2)	<0.030 inch deep acceptable	Not applicable	None allowed	Acceptable	<0.030 inch deep acceptable

Table 3-1. Landing Gear System Components Expanded Combat Damage Criteria - Cont

Nomenclature/ Part Number	Gouges and Holes	Smooth Dents and Bends	Sharp Creases and Bends	Paint Scratches	Nicks and Scratches
TLG Axle 1168819-103 (Figure 3-2)	<0.030 inch deep acceptable	<0.025 inch deep acceptable provided wheel still rotates.	None allowed	Acceptable	<0.030 inch deep acceptable
TLG Fork 1168850-101 (Figure 3-2)	<0.030 inch deep acceptable	<0.015 inch deep dents acceptable. Bends that prevent wheel rotation not acceptable.	None allowed	Acceptable	<0.030 inch deep acceptable
NOTE Damage limits are maximum allowed without repair and blending is not required unless specified. However, damage should be blended out whenever possible.					

3-5. CANNIBALIZATION CRITERIA.

The landing gear system components that are considered crucial during combat are identified by the landing gear system cannibalization candidates list (Table 3-2). Whenever possible, these components should be cannibalized from other aircraft that are incapable of returning to base or considered unable to fly. This list is a prediction based on evaluations of the components' susceptibility of damage,deferrability, and repairability. This is not an exhaustive list of all components which may be cannibalized. When needed, any component may be cannibalized and used provided it is acceptable using the serviceability criteria provided.

Table 3-2. Landing Gear System Cannibalization Candidates

Nomenclature	Part Number
MLG Shock Strut (Figure 3-1)	1168100-505
MLG Trailing Arm (Figure 3-1)	1168320-101 (LH) 1168320-102 (RH)
Tail Wheel Lock Actuator (Figure 3-2)	1168960-507
TLG Arm and Socket (Figure 3-2)	1168851-101
TLG Arm Assembly (Figure 3-2)	1168859-101
TLG Shock Strut (Figure 3-2)	1168600-505
MLG Wheel (Figure 3-1)	040-20800 (Parker-Hannifin) or 5001580-1 (Goodyear)
MLG Tire (Figure 3-1)	7-111412002

Table 3-2. Landing Gear System Cannibalization Candidates - Cont

Nomenclature	Part Number
MLG Wheel Brake Assembly (Figure 3-3)	030-16802 (Parker-Hannifin) or 5004563-3 (Goodyear)
TLG Wheel (Figure 3-2)	040-20700 (Parker-Hannifin) or 9531651 (Goodyear)
TLG Tire (Figure 3-2)	7-311220113-1

3-6. REPAIR PROCEDURE INDEX.

Refer to Chapter 7 for hydraulic tubing assessment/repair. Refer to TM 1-1520-238-23 for specific landing gear system component removal/installation procedures.

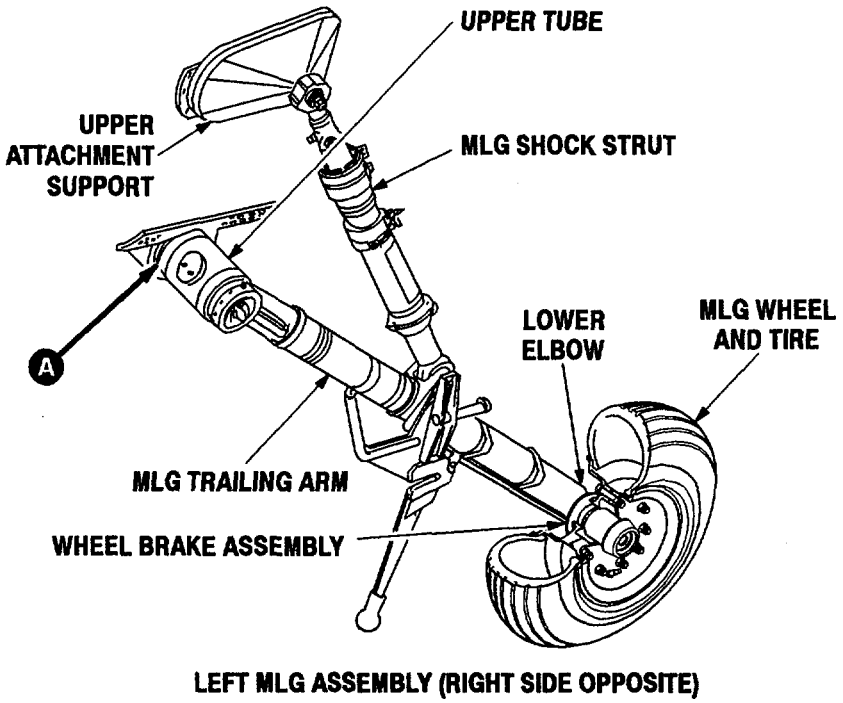

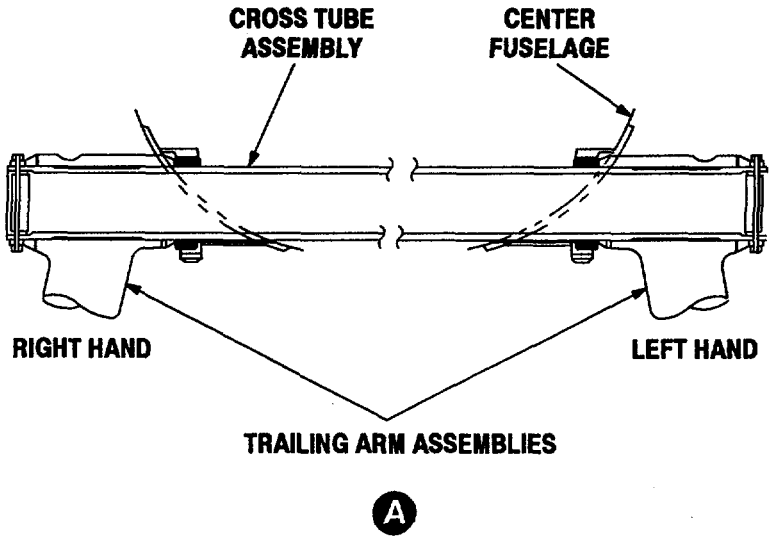

M102-094

Figure 3-1. Main Landing Gear Subsystem Component Location

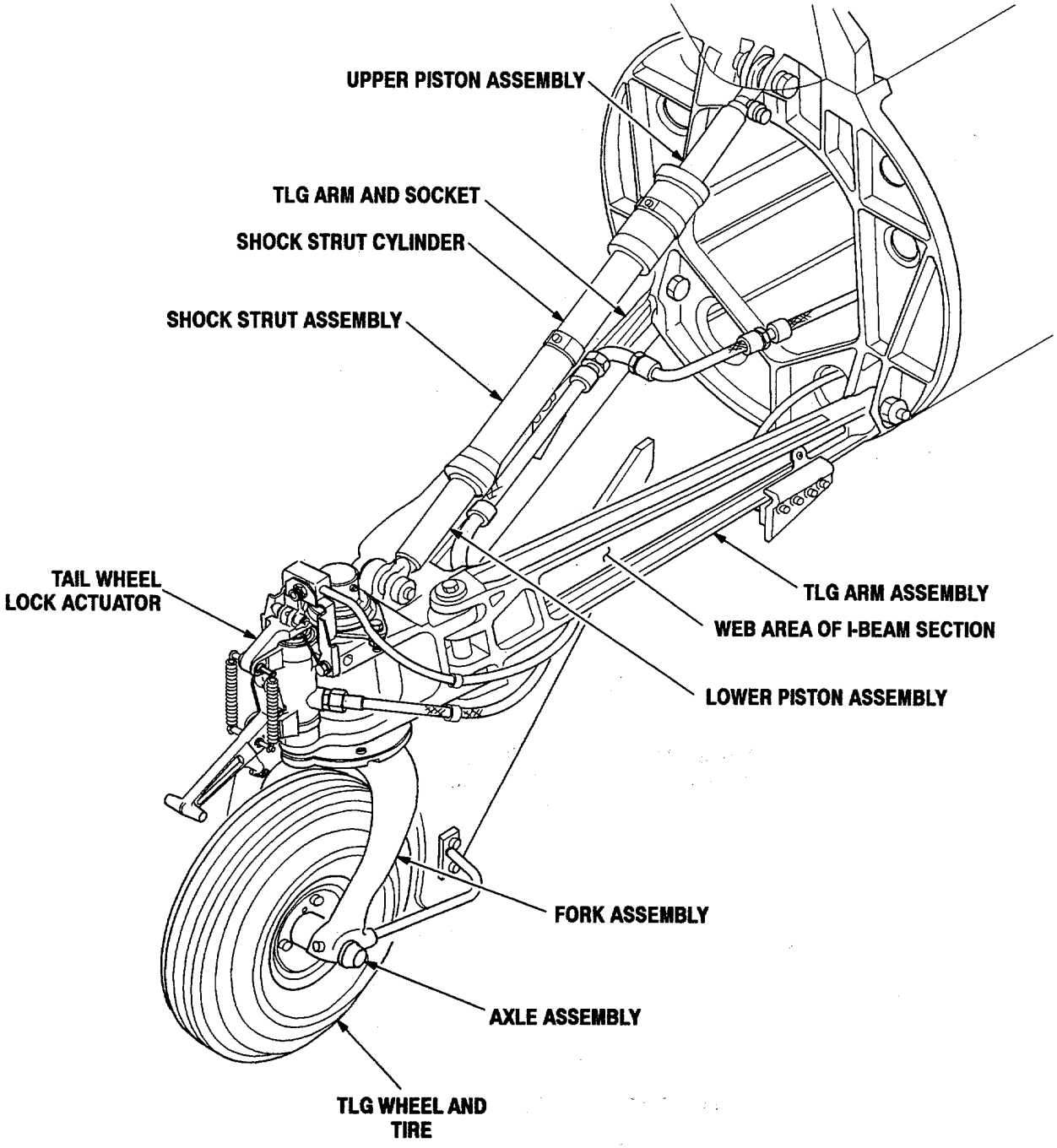

M102-095

Figure 3-2. Tail Landing Gear Subsystem Component Location

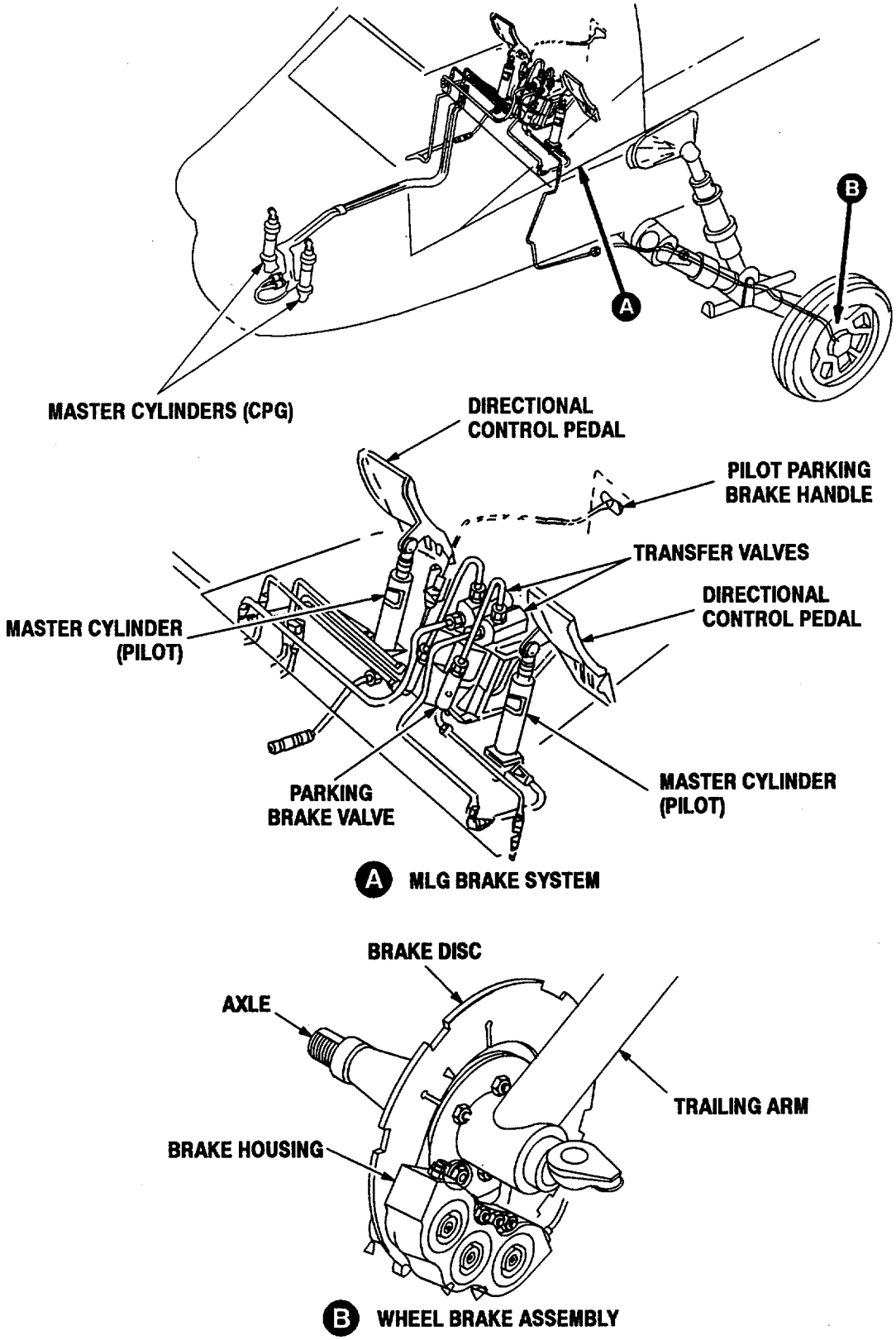

M102-096

Figure 3-3. Brake Subsystem Component Location

CHAPTER 4.
POWER PLANT INSTALLATION SYSTEM

BDAR TM PROCEDURES. THE EXPEDIENT REPAIR PROCEDURES IN BDAR TM ARE FOR USE IN COMBAT ONLY. STANDARD MAINTENANCE/REPAIR PROCEDURES ARE TO BE USED AS SOON THEREAFTER AS POSSIBLE.

4-1. SCOPE.

This chapter contains description, location, serviceability criteria, and cannibalization criteria for the powerplant installation system. Refer to TB 55-2840-248-20-17 for battle damage assessment and repair of the T700-GE-701 power plant. Repair of battle damage to the power plant installation system during combat may be deferrable depending on the damage or component function.

4-2. SYSTEM DESCRIPTION AND LOCATION.

The power plant installation system consists of the primary support subsystem, secondary support subsystem, and the linkage rigging subsystem (Figure 4-1). Refer to TM 1-1520-238-T for detailed description and operation of specific power plant components.

4-2.1. Primary Support Subsystem. The primary support subsystem consists of the following: engine mount forward-inboard support, engine mount aft-in-board support, and two engine forward lower supports. The forward-inboard and aft-inboard supports are located on the engine nacelle assembly fire wall. The two engine forward lower supports are located in the forward lower section of the engine nacelle assembly.

4-2.2. Secondary Support Subsystem. The secondary support subsystem consists of the following: engine aft secondary support. This support is located in the aft lower section of the engine nacelle assembly.

4-2.3. Linkage Rigging Subsystem. The linkage rigging subsystem consists of the following: engine forward rig connecting link and engine aft rig connecting link. These links are located in the forward and aft lower sections of the engine nacelle assembly.

4-3. ASSESSMENT PROCEDURE.

The components of the power plant installation system are susceptible to ballistic damage or operationally induced damage. Assess damage to determine if repair or cannibalization is necessary. Types of major damage that may be encountered during assessment are gouges, nicks, holes, bends, distortions, creases, and dents.

4-4. SERVICEABILITY CRITERIA.

Serviceability criteria provides each power plant installation subsystem with general and specific criteria. When a structural component is damaged and the serviceability criteria for the specific type of damage is not presented, TM 1-1520-238-23 inspection criteria shall be utilized. When a non-structural component is damaged, most instances will result in deferred repair. When any damage is deferred, periodic inspections shall be performed to monitor damage growth. Table 4-1 provides power plant installation system components expanded combat damage criteria. Table 4-2 provides quick release pin suitable substitute part numbers. Refer to TB 55-2840-248-20-17 and TM 1-1520-238-23 for serviceability criteria of the T700-GE-701 power plant.

Table 4-1. Power Plants Installation System Components Expanded Combat Damage Criteria

Nomenclature	Part Number	Damage Criteria
Engine Forward-Inboard Mount (Figure 4-1, sheet 1)	7-211671011	Nicks, gouges, and scratches are allowed. Maximum depth of material removed is 0.090 inch without repair.
Engine Aft-Inboard Mount (Figure 4-1, sheet 1)	7-311670024	Nicks, gouges, and scratches are allowed. Maximum depth of material removed is 0.040 inch without repair.
Engine Forward-Lower Mount (Figure 4-1, sheet 1)	7-311670014	Nicks, gouges, and scratches are allowed. Maximum depth of material removed is 0.038 inch without repair.
Engine Aft-Lower Mount (Figure 4-1, sheet 1)	7-311670038	Nicks, gouges, and scratches are allowed. Maximum depth of material removed is 0.050 inch without repair.
Engine Mount Forward-Inboard Support (Figure 4-1, sheet 2)	7-311670131	Nicks, gouges, and scratches are allowed. Maximum depth of material removed is 0.012 inch without repair.
Engine Mount Aft-Inboard Support (Figure 4-1, sheet 2)	7-311670117	Nicks, gouges, and scratches are allowed. Maximum depth of material removed is 0.060 inch without repair.
Engine Aft Rig Connecting Link (Figure 4-1, sheet 2)	7-211670106	Nicks, gouges, and scratches are allowed. Maximum depth of material removed is 0.018 inch without repair.
Engine Forward Rig Connecting Link (Figure 4-1, sheet 2)	7-211670105	Nicks, gouges, and scratches are allowed. Maximum depth of material removed is 0.018 inch without repair.
Engine Aft Lower Link Assembly (Figure 4-1, sheet 2)	7-211670104	Nicks, gouges, and scratches are allowed. Maximum depth of material removed is 0.020 inch without repair.
Engine Support Assembly (Figure 4-1, sheet 2)	7-311113129-2/-3 7-311113290-3/-5	Nicks, gouges, and scratches are allowed. Maximum depth of material removed is 0.030 inch without repair.

NOTE

Damage limits are maximum allowed without repair and blending is not required unless specified. However, damage should be blended out whenever possible..

Table 4-2. Power Plants Installation System Quick Release Pins Suitable Substitutes

Quick Release Pin Part Number	Suitable Substitutes Nomenclature	Suitable Substitutes Part Number
MS17990C617 (Figure 4-1, sheet 2)	Bolt Washer Nut Cotter Pin	NAS1306-23D or NAS6606D23 AN960-616 MS21225-6 or AN310-6 MS24665-155

Table 4-2. Power Plants Installation System Quick Release Pins Suitable Substitutes - Cont

Quick Release Pin Part Number	Suitable Substitutes Nomenclature	Suitable Substitutes Part Number
7-211670103 (Figure 4-1, sheet 2)	Bolt Washer Nut Cotter Pin	NAS1306-23D or NAS6606D23 AN960-616 MS21225-6 or AN310-6 MS24665-155
7-211670101 (Figure 4-1, sheet 2)	Bolt Washer Nut Cotter Pin	NAS1306-16D or NAS6606D16 AN960-616 MS21225-6 or AN310-6 MS24665-155
MS17990C423 (Figure 4-1, sheet 2)	Bolt Washer Nut Cotter Pin	NAS1304-38D or NAS6604D38 AN960-416 MS21225-4 or AN310-4 MS24665-153

4-5. CANNIBALIZATION CRITERIA.

The power plant installation system components that are considered crucial during combat are identified by the power plant installation system cannibalization candidates list (Table 4-3). Whenever possible, these components should be cannibalized from other aircraft that are incapable of returning to base or considered unable to fly. This list is a prediction based on evaluations of the components' susceptibility of damage, deferrability, and repairability. This is not an exhaustive list of all components which may be cannibalized. When needed, any component may be cannibalized and used provided it is acceptable using the serviceability criteria provided.

Table 4-3. Power Plant Installation System Cannibalization Candidates

Nomenclature	Part Number
Engine Forward-Inboard Mount (Figure 4-1, sheet 1)	7-211671011
Engine Mount Forward-Inboard Support (Figure 4-1, sheet 2)	7-311670131
Engine Aft Lower Link Assembly (Figure 4-1, sheet 2)	7-211670104
Engine Forward Rig Connecting Link (Figure 4-1, sheet 2)	7-211670105
Engine Mount Aft-Inboard Support (Figure 4-1, sheet 2)	7-311670117
Engine Forward-Lower Mount (Figure 4-1, sheet 1)	7-311670014
Engine Aft-Inboard Mount (Figure 4-1, sheet 1)	7-311670024
Engine Aft Rig Connecting Link (Figure 4-1, sheet 2)	7-211670106
Engine Forward Lower Support (Figure 4-1, sheet 2)	7-211140136
Engine Aft Secondary Support (Figure 4-1, sheet 2)	7-211140137

4-6. REPAIR PROCEDURE INDEX.

Refer to TB 55-2840-248-20-17 for repair of the T700-GE-701 power plant. Refer to TM 55-1500-323-24 for electrical wiring repairs. Refer to TM 1-1520-238-23 for specific power plant system component removal/installation procedures.

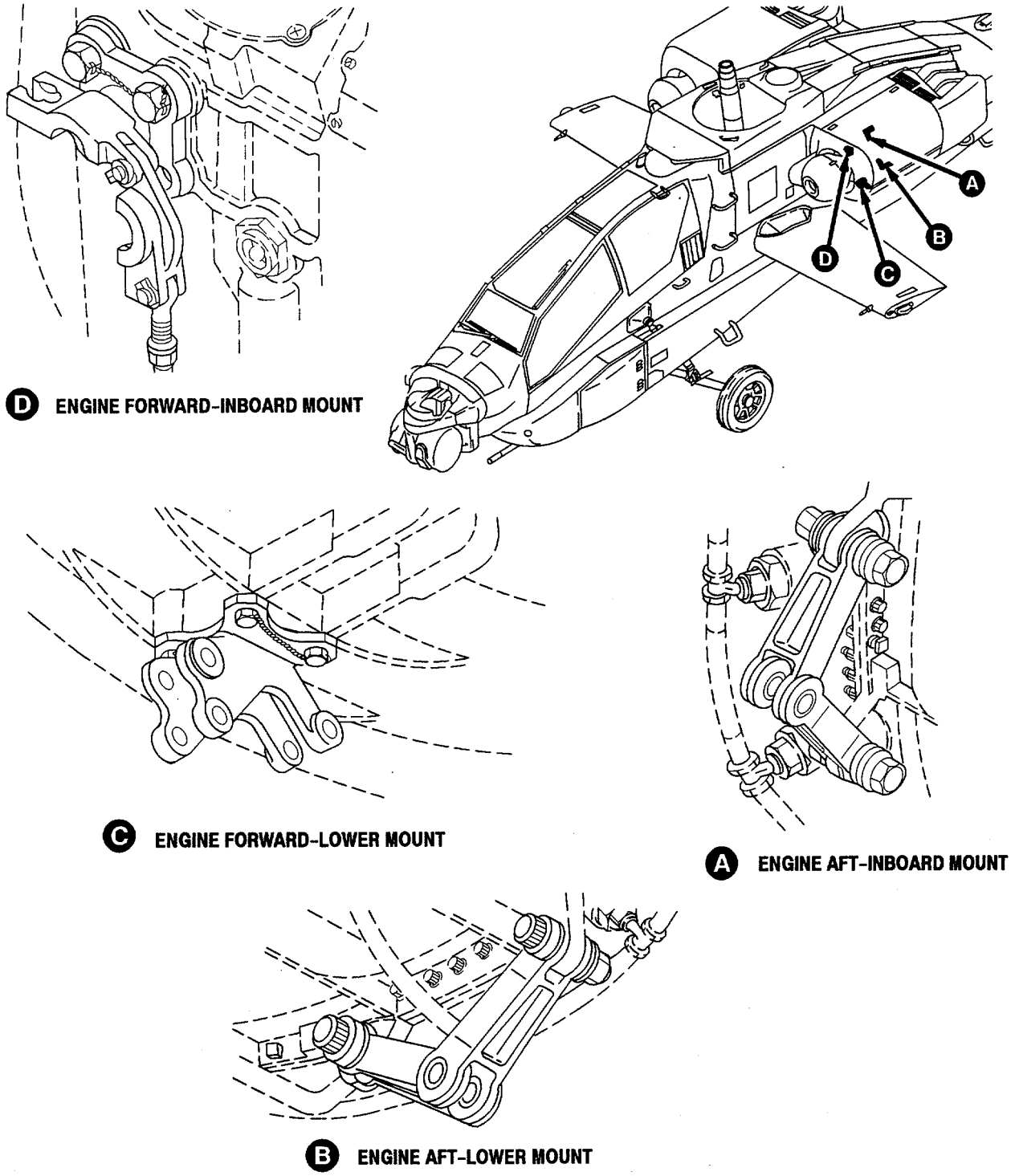

M102-079-1

Figure 4-1. Power Plant Installation Component Location (Sheet 1 of 2)

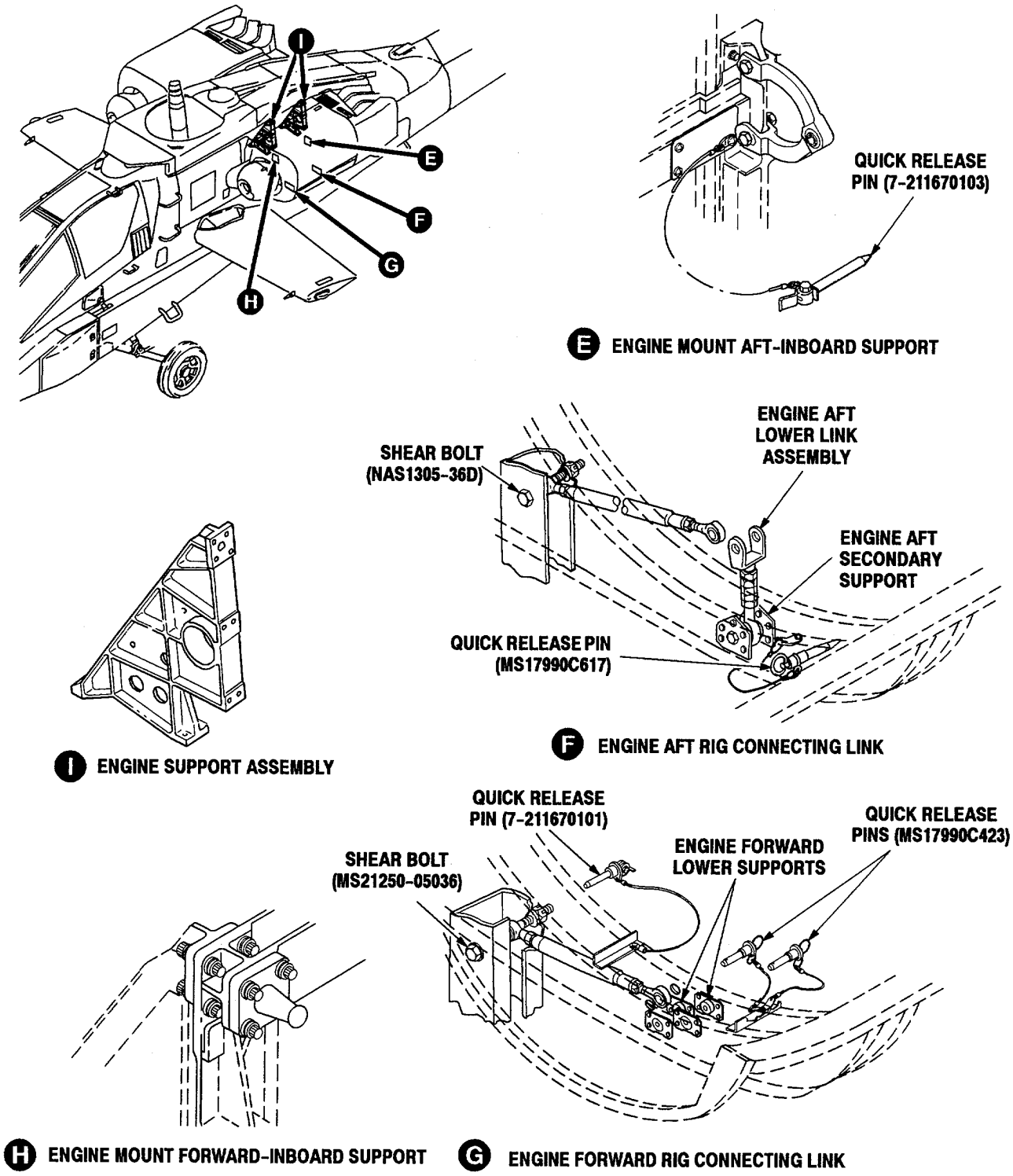

M102-079-2

Figure 4-1. Power Plant Installation Component Location (Sheet 2 of 2)

CHAPTER 5
ROTOR SYSTEM

BDAR TM PROCEDURES. THE EXPEDIENT REPAIR PROCEDURES IN BDAR TM ARE FOR USE IN COMBAT ONLY. STANDARD MAINTENANCE/REPAIR PROCEDURES ARE TO BE USED AS SOON THEREAFTER AS POSSIBLE.

Section I. INTRODUCTION

5-1. SCOPE.

This chapter contains description, location, serviceability criteria, and cannibalization criteria for the rotor system. Repair of battle damage to the rotor system during combat may be deferrable depending on the damage or component function.

5-2. SYSTEM DESCRIPTION AND LOCATION.

The rotor system consists of the main rotor subsystem and the tail rotor subsystem. Refer to TM 1-1520-238-T for detailed description and operation of specific rotor system components.

5-2.1. Main Rotor Subsystem (Figure 5-1). The main rotor subsystem consists of the following: hub subassembly, pitch housing, lead-lag link, lead-lag hinge pin, damper, hub nut, main rotor blade, and the main rotor blade pin. Components of the hub subassembly consist of the following: strap pack assembly, feathering bearing support and housing, upper and lower plate, upper and lower bearing, lower shoe assembly, and the droop stop ring and mechanism. The main rotor is located at the top of the helicopter at F.S. 200.

5-2.2. Tail Rotor Subsystem (Figure 5-2). The tail rotor subsystem consists of the following: hub, fork assembly, teetering bolt, strap pack assembly, and tail rotor blade. The tail rotor is located at the top of the vertical stabilizer at F.S. 559.

5-3. ASSESSMENT PROCEDURE.

The components of the rotor system are susceptible to ballistic damage or operationally induced damage such as rotor strikes. Assess damage to determine if repair or cannibalization is necessary. Types of major damage that may be encountered during assessment are gouges, nicks, holes, bends, distortions, or dents.

5-4. SERVICEABILITY CRITERIA.

Serviceability criteria provides each rotor subsystem with general and specific criteria. When a component is damaged and the serviceability criteria for the specific type of damage is not presented, TM 1-1520-238-23 inspection criteria shall be utilized. When any damage is deferred, periodic inspections shall be performed to monitor damage growth.

5-4.1. Rotor System General Serviceability Criteria.

a. Corrosion is allowed to be a maximum of 50 percent of the component area and a depth no greater than 0.020 inch.

b. Threads which are stripped are allowed, provided a minimum of five good threads are engaged. This limit does not apply to the main rotor hub nut.

c. Scratches where paint only has been removed are acceptable.

5-4.2. Rotor System Specific Serviceability Criteria.

a. Wear of bushings and bearings in the lead-lag link, lower shoe, pitch housing, etc. is allowed to have 0.030inch play maximum.

b. Lead-lag dampers are allowed to have debonded, cracked, or torn elastomer provided the metal plates have not separated and the dampers are functional.

5-5. CANNIBALIZATION CRITERIA.

The rotor system components that are considered crucial during combat are identified by the rotor system cannibalization candidates list (Table 5-1). Whenever possible, these components should be cannibalized from other aircraft that are incapable of returning to base or considered unable to fly. This list is a prediction based on evaluations of the components' susceptibility of damage, deferrability, and repairability. This is not an exhaustive list of all components which may be cannibalized. When needed, any component may be cannibalized and used provided it is acceptable using the serviceability criteria provided.

Table 5-1. Rotor System Cannibalization Candidates

Nomenclature	Part Number
Main Rotor Blade (Figure 5-1, sheet 2)	7-311412000-5
Tail Rotor Blade (Figure 5-2, sheet 1)	7-311422050-7
Main Rotor Head Assembly (Figure 5-1, sheet 1)	7-311411003-611
Main Rotor Blade Attachment Pin (Figure 5-1, sheet 2)	7-211411185
Tail Rotor Head Assembly (Figure 5-2, sheet 1)	7-311421036-9
Main Rotor Pitch Housing (Figure 5-1, sheet 2)	7-311411215-15
Main Rotor Retaining Ring (Figure 5-1, sheet 2)	7-311411103-3
Tail Rotor Blade Attachment Bolt (Figure 5-2, sheet 2)	HS4243-9-63
Main Rotor Hub Nut (Figure 5-1, sheet 2)	7-311411102

5-6. REPAIR PROCEDURE INDEX.

Repair Procedure Para
Main Rotor Blade Repair..... 5-8

Refer to TM 1-1520-238-23 for specific rotor system component removal/installation procedures.

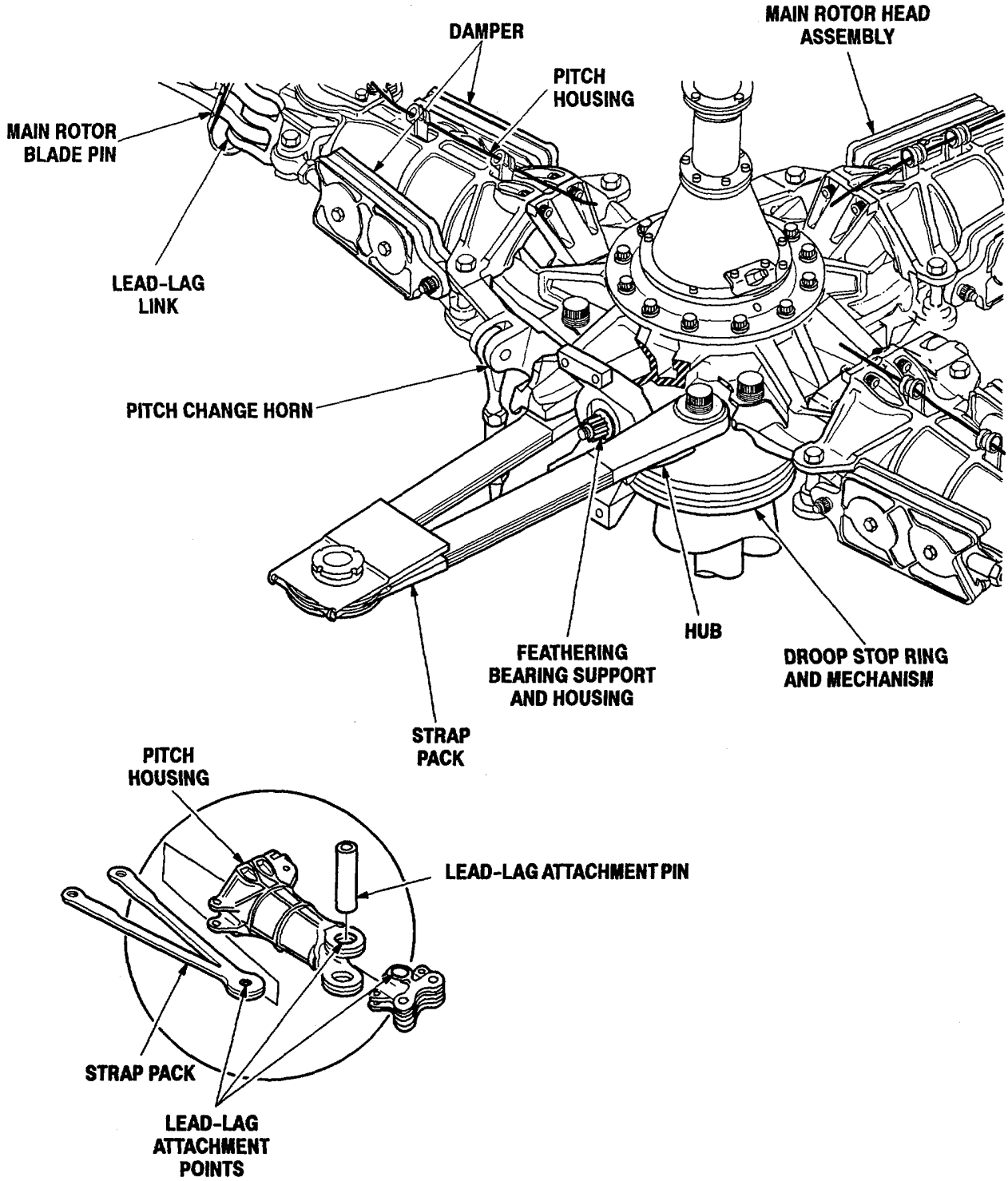

M102-075-1

Figure 5-1. Main Rotor Subsystem Component Location (Sheet 1 of 6)

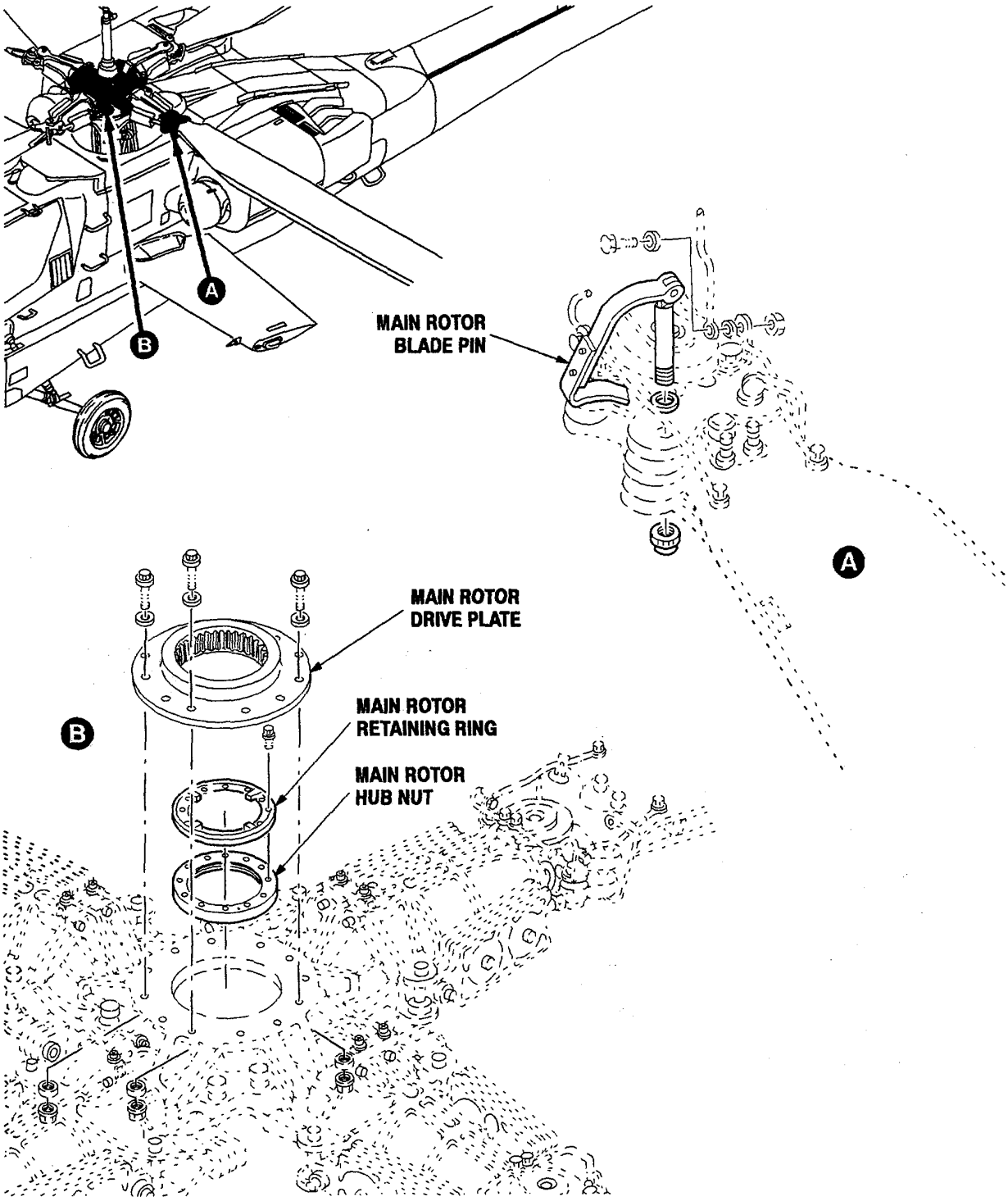

M102-075-2

Figure 5-1. Main Rotor Subsystem Component Location (Sheet 2 of 6)

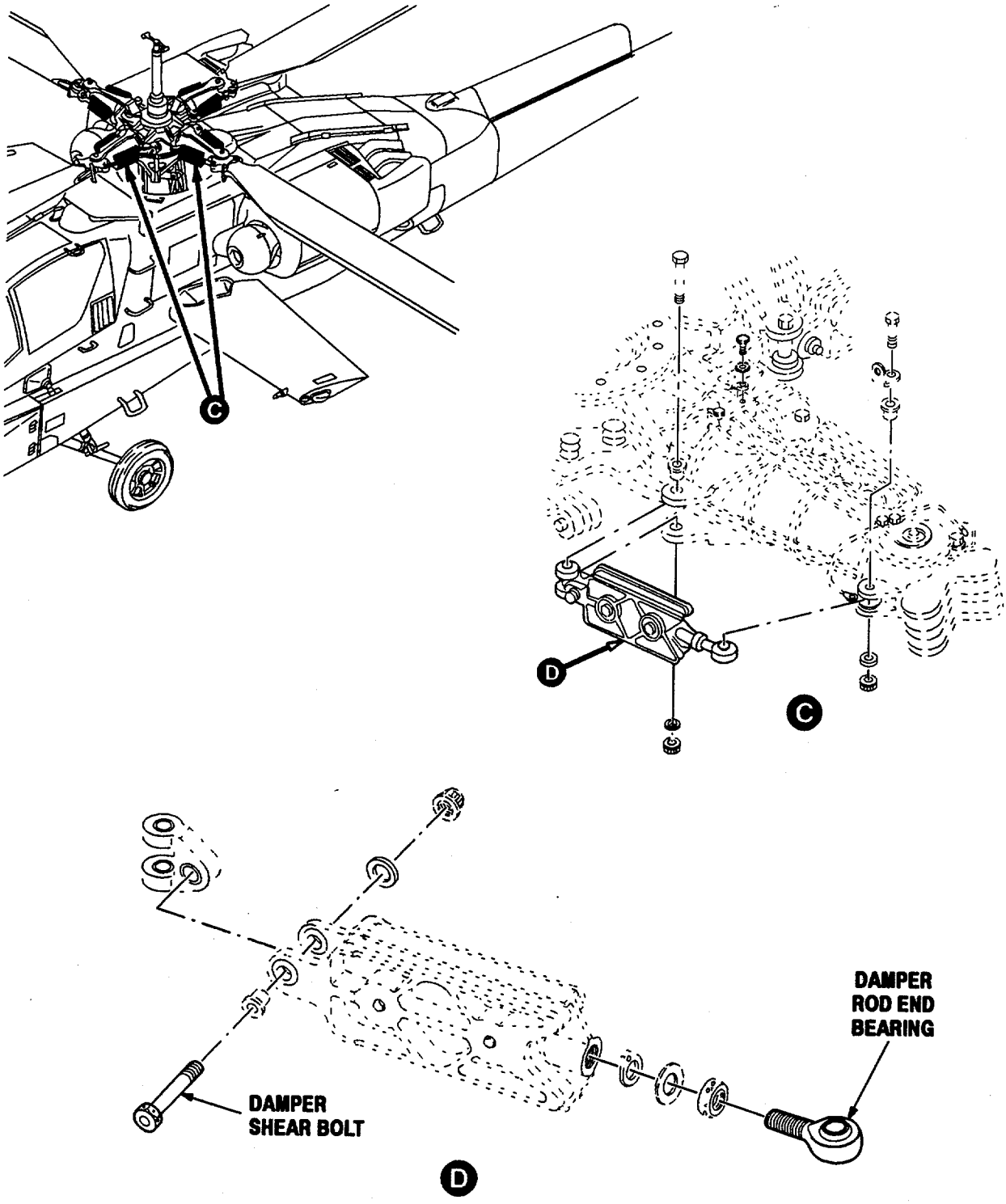

M102-075-3

Figure 5-1. Main Rotor Subsystem Component Location (Sheet 3 of 6)

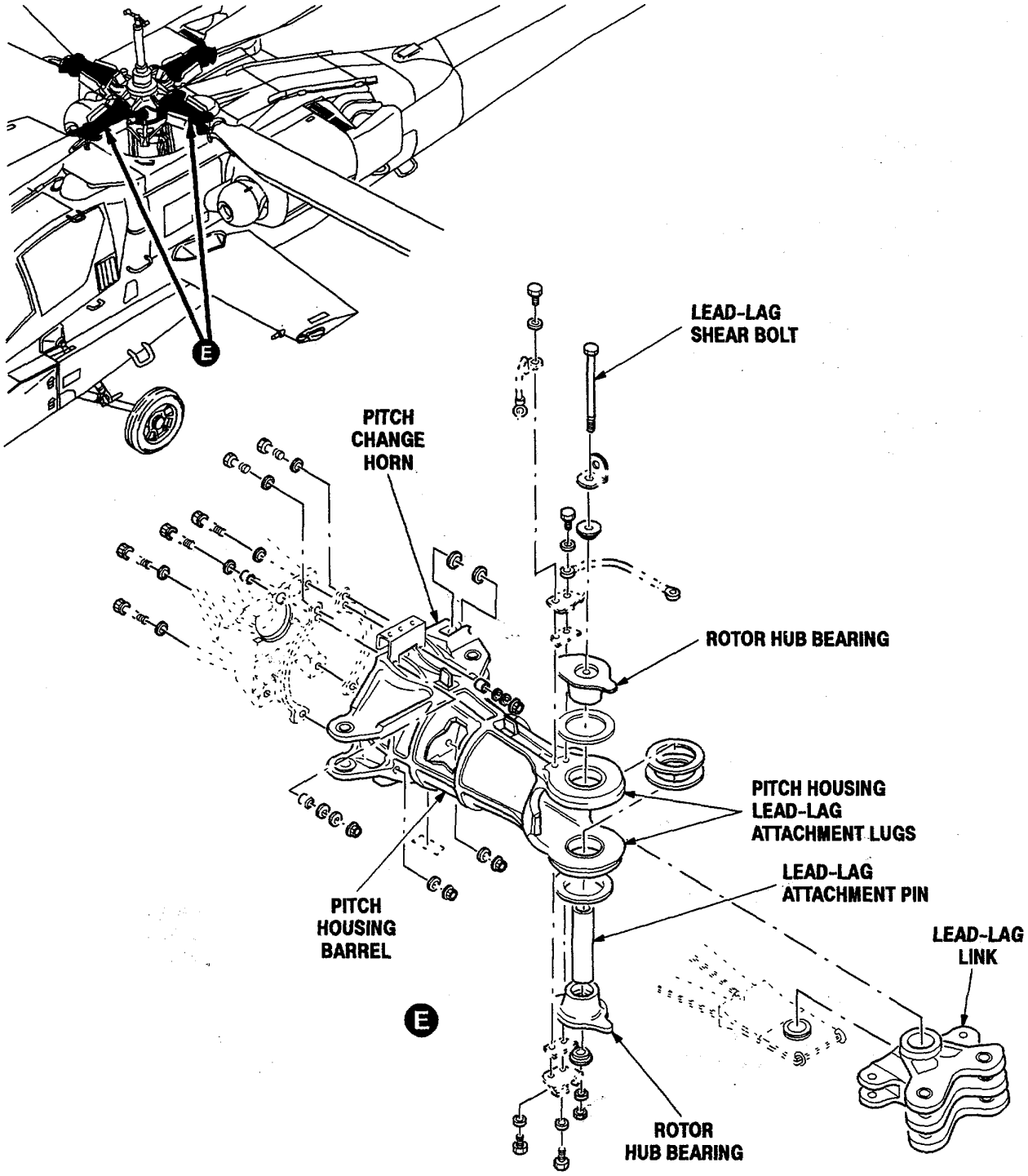

M102-075-4

Figure 5-1. Main Rotor Subsystem Component Location (Sheet 4 of 6)

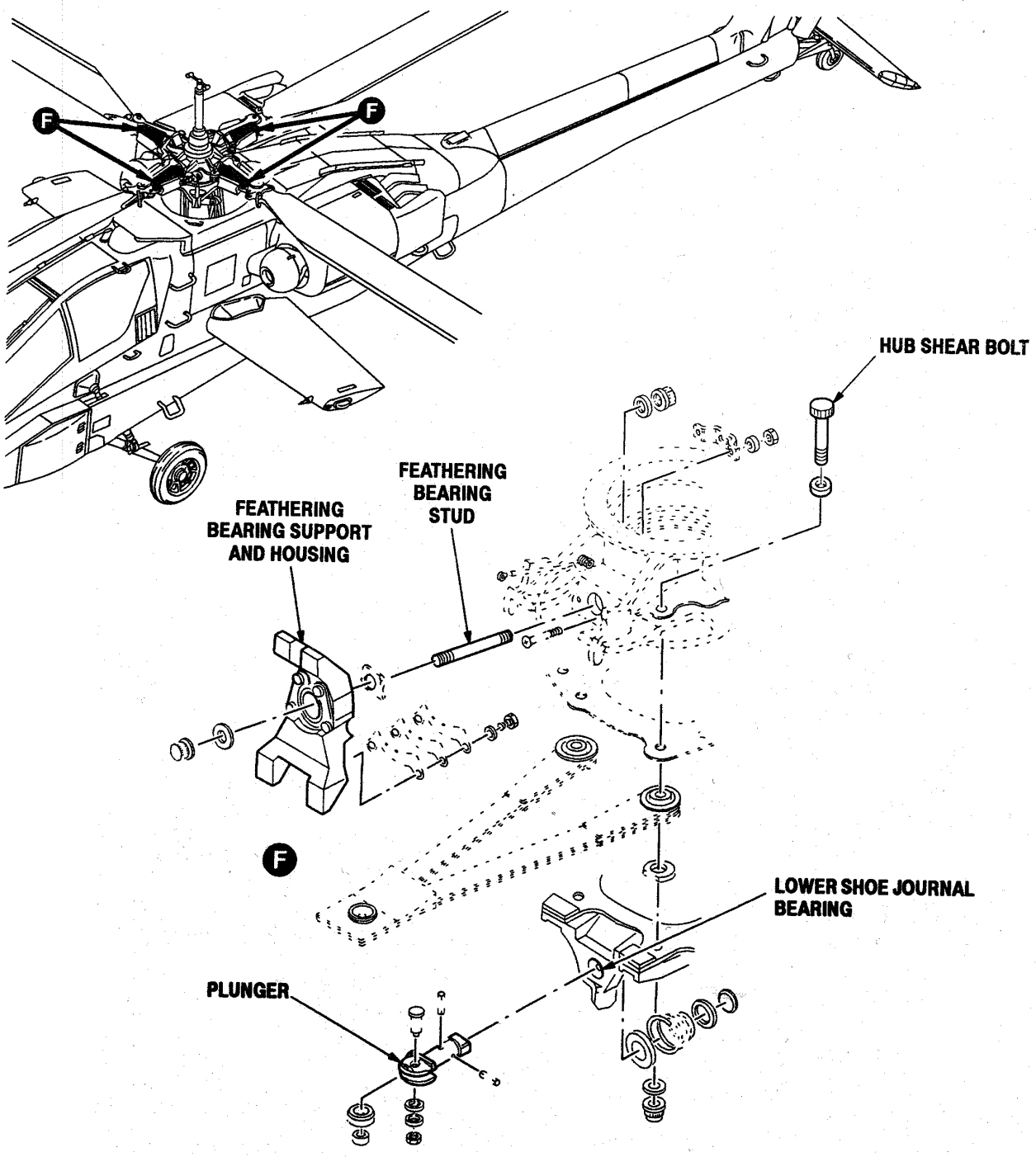

M102-075-5

Figure 5-1. Main Rotor Subsystem Component Location (Sheet 5 of 6)

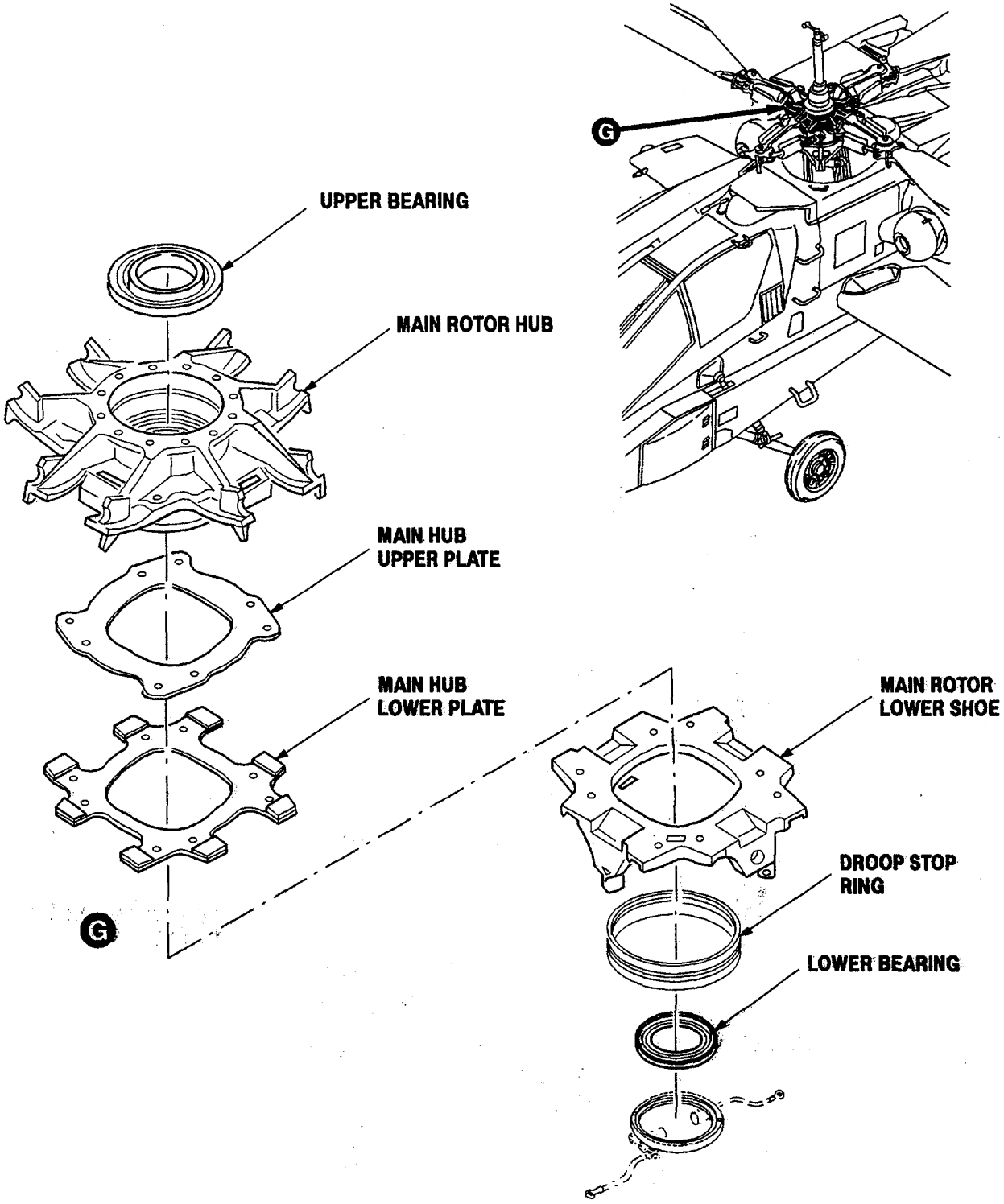

M102-075-6

Figure 5-1. Main Rotor Subsystem Component Location (Sheet 6 of 6)

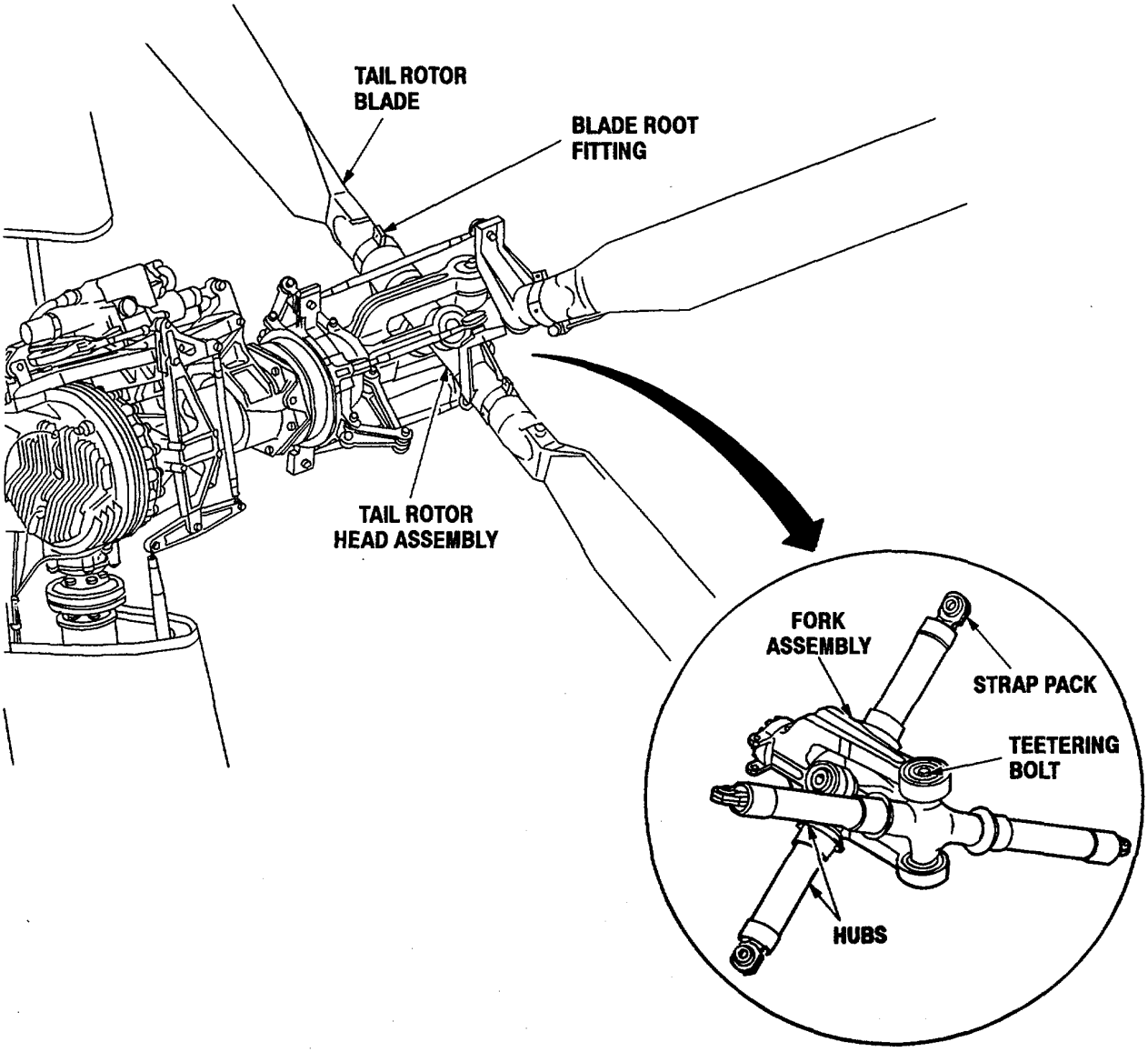

M102-076-1

Figure 5-2. Tail Rotor Subsystem Component Location (Sheet 1 of 2)

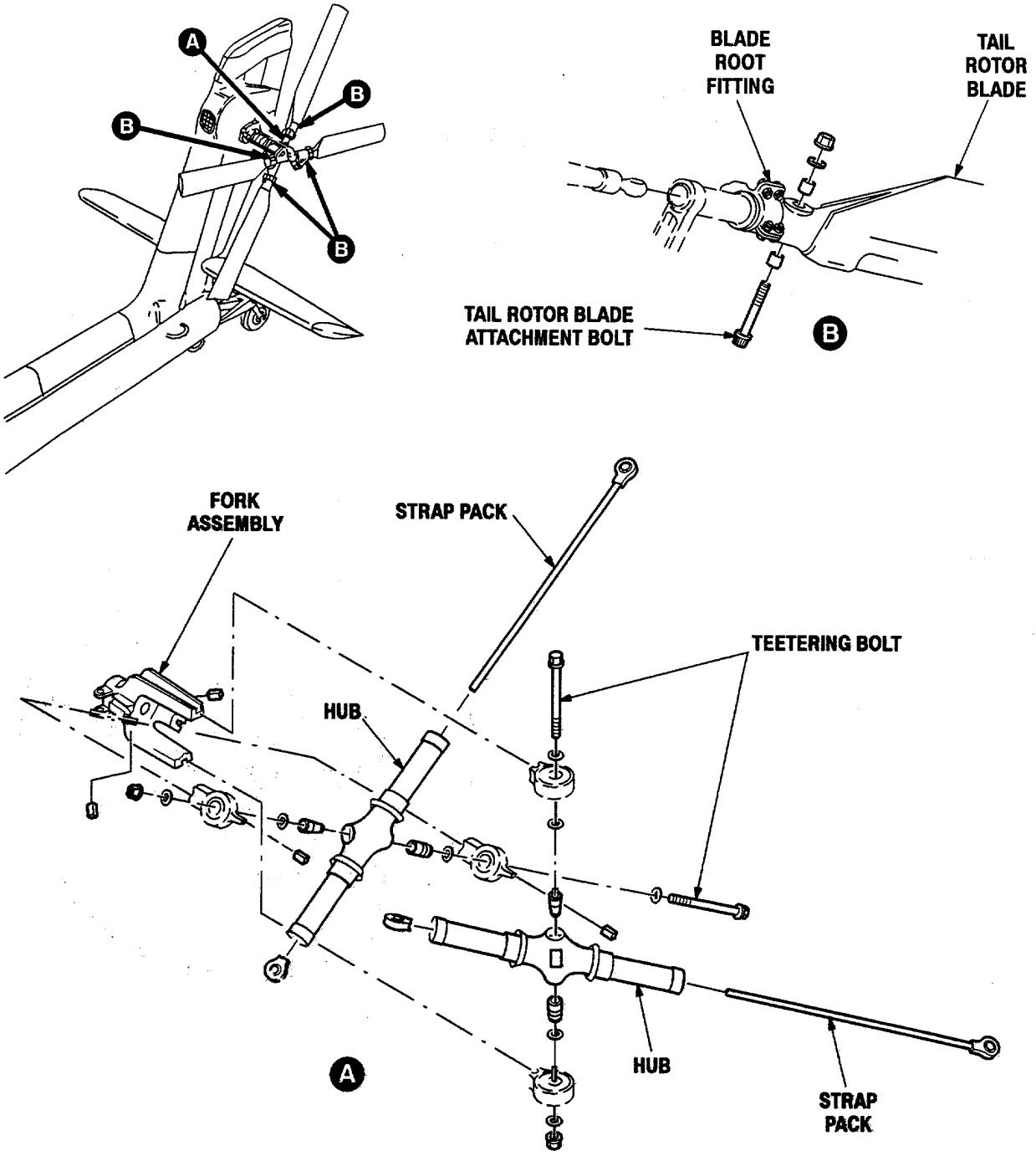

M102-076-2

Figure 5-2. Tail Rotor Subsystem Component Location (Sheet 2 of 2)

SECTION II. MAIN ROTOR BLADES

5-7. GENERAL.

The AH-64A rotor system consists of critical and highly stressed components. Preservation of aerodynamic contours and system weight and balance are critical to performance

Damage passing through both skins with core damage of less than 1-inch diameter will be repaired by applying skin patches to both top and bottom sides of blade (Option 1). Damage that passes completely through blade and is larger than 1-inch diameter, will be repaired by installing plug patches from both top and bottom sides of blade (Option 2).

5-8. MAIN ROTOR BLADE REPAIR.

5-8.1. Option 1: Skin Patch Repair.

5-8.1.1. Personnel/Time Required:

- 1 person
- 5 hours

5-8.1.2. Materials/Tools Required:

- Appropriate size skin patch repair kit (Table 5-2)
- Adhesive (item 1, App C)
- Cloth (item 11, App C)
- Isopropyl alcohol (item 19, App C)
- Sealing compound (item 37, App C)
- Light duty laboratory apron (item 4, App B)
- Chemical protective gloves (item 19, App B)
- Blade repair fixture (item 23, App B)
- Adjustable air filtering respirator (item 28, App B)
- Aircraft mechanic's tool kit (item 39, App B)

5-8.1.3. Procedural Steps:

CAUTION

Grease pencils will not be used. Only lead pencil lines shall be made. Pencil marks other than those specified in the instructions can weaken repair.

NOTE

- Enter repairs made on DA Form 2408-13-1/2408-13-1-E and DA Form 2408-16/2408-16-E. A permanent record on the DA Form 2408-16/2408-16-E must be maintained. Once a skin or plug patch has been installed it is impossible to determine which type of patch has been applied.
- The following repairs can be made on the top or bottom of main rotor blades while blades are installed on helicopter. However, the preferred method of repair is off helicopter. When repair limits are questioned, proceed to next critical repair procedure.

5-8.1.3.1. Application of Skin Patch.

NOTE

Damage passing through both skins with core damage of less than 1-inch diameter will be repaired by applying skin patches to both top and bottom sides of blade.

1. Damaged blade will be positioned for access to damaged area (Figure 5-3). Support blade to prevent movement and droop.
2. Measure diameter of damage.
3. Use skin patch repair kit, no larger than necessary to overlap damage 1-inch all around. Skin patch kits are available in different sizes as shown in Table 5-2.

Table 5-2. Skin Patch Repair Kits

Kit No.	Patch Diameter
Rotary blade repair kit (item 29, App C)	3 inches
Rotary blade repair kit (item 30, App C)	5 inches
Rotary blade repair kit (item 31, App C)	8 inches

4. Place kit template on blade. Position inner circle to enclose damage. Keep template from slipping. Draw a pencil line around outer circle of template (Figure 5-3, view A).

⚠CAUTION

- Care must be taken to prevent isopropyl alcohol from entering core area of blade. Spillage must be avoided. Isopropyl alcohol can damage leading edge erosion guard.

- To prevent damaging the blade, sand metallic surfaces in a spanwise direction and sand glass skin surfaces in a chordwise direction.

- Do not sand through skin fibers. Sand only until primer coat color is removed.

5. Sand paint and primer off blade surface within area of guide circle. Start with 120 grit and finish with 220 grit abrasive paper (from kit). Sand only until primer coloring is removed from surface. Do not sand skin fibers. Sand off any damaged material rising above normal contour of blade (Figure 5-3, view A).

6. Dampen cheesecloth with isopropyl alcohol and clean area within guide circle. Wipe off all sanding dust.

7. Using template, redraw guide circle.

8. Cut short lengths of masking tape (from kit) and mask around outside of guide circle (Figure 5-3, view B).

- Care must be taken to prevent isopropyl alcohol from entering core area of blade. Spillage must be avoided. Isopropyl alcohol can damage leading edge erosion guard.

⚠CAUTION

- Surfaces to be bonded must be clean, dry, and free of fingerprints and all foreign material.

9. Dampen clean cheesecloth with isopropyl alcohol, and clean inside masked area. Wipe with clean, dry cheesecloth before dampness evaporates.

NOTE

Mix sufficient amount of adhesive to complete the repair. Pot life of adhesive varies depending on amount mixed. Repair procedure must be completed without delay once adhesive has been mixed.

10. Mix adhesive in accordance with manufacturers instructions. Using clean 1-inch brush (from kit), apply coat of adhesive to blade skin within guide circle and to underside of skin patch (Figure 5-3, view B).

11. Center skin patch within guide circle, with stenciled arrow pointing outboard (spanwise), and press firmly into place. Slide patch back and forth slightly under hand pressure to even adhesive. Work out air bubbles by using hand pressure to squeeze patch from center to edge.

CAUTION

Care must be taken to prevent isopropyl alcohol from entering core area of blade. Spillage must be avoided. Isopropyl alcohol can damage leading edge erosion guard.

12. Using clean cheesecloth dampened with isopropyl alcohol, temporarily lift edges of peel-ply (if installed) and wipe off excess adhesive.
13. Place masking tape over edge of patch in four places to prevent movement. Place two long pieces of masking tape at right angles, centered over patch spanwise and chordwise and extending beyond dimensions of blade repair fixture bladder.
14. If peel ply is not installed on patch, place sheet of peel ply over repair area and tape into place.

5-8.1.3.2. Install Blade Repair Fixture (Figure 5-4).

CAUTION

Do not damage blade trailing edge section during removal/installation of blade repair fixture.

NOTE

If blade repair fixture is not available, use suitable material placed on top of repair to apply even pressure during adhesive cure. Cure time is increased to 24 hours at mini- mum of 60° F (15° C).

1. Install repair fixture from trailing edge side of blade only.
2. Center bladder over repair area and secure.
3. Center pad opposite bladder and secure.

CAUTION

Tightening of locking knobs so that metal skirt around bladder is closer than 0.125 inch to blade can damage blade.

4. Tighten fixture channel locking knobs until metal skirt around bladder is approximately 0.125 inch from blade skin.
5. Actuate hand pump to obtain 4 psi reading on pressure gage. Disconnect pump hose clamp from air valve.

CAUTION

If 110-volt AC electrical power or a heat source is unavailable at time of repair, required cure time is increased to 24 hours minimum.

NOTE

During curing process, it may be necessary to periodically reconnect hose and actuate pump to maintain 4 psi.

6. Connect 110-volt AC electrical power to bladder repair fixture. Cure repair area at 150 - 180° F (65 - 82° C) for 90 minutes.
7. When curing time is complete, disconnect electrical power and allow cool down of 15 minutes.
8. Relieve air pressure by lifting center portion of relief valve.
9. Remove repair fixture from blade.

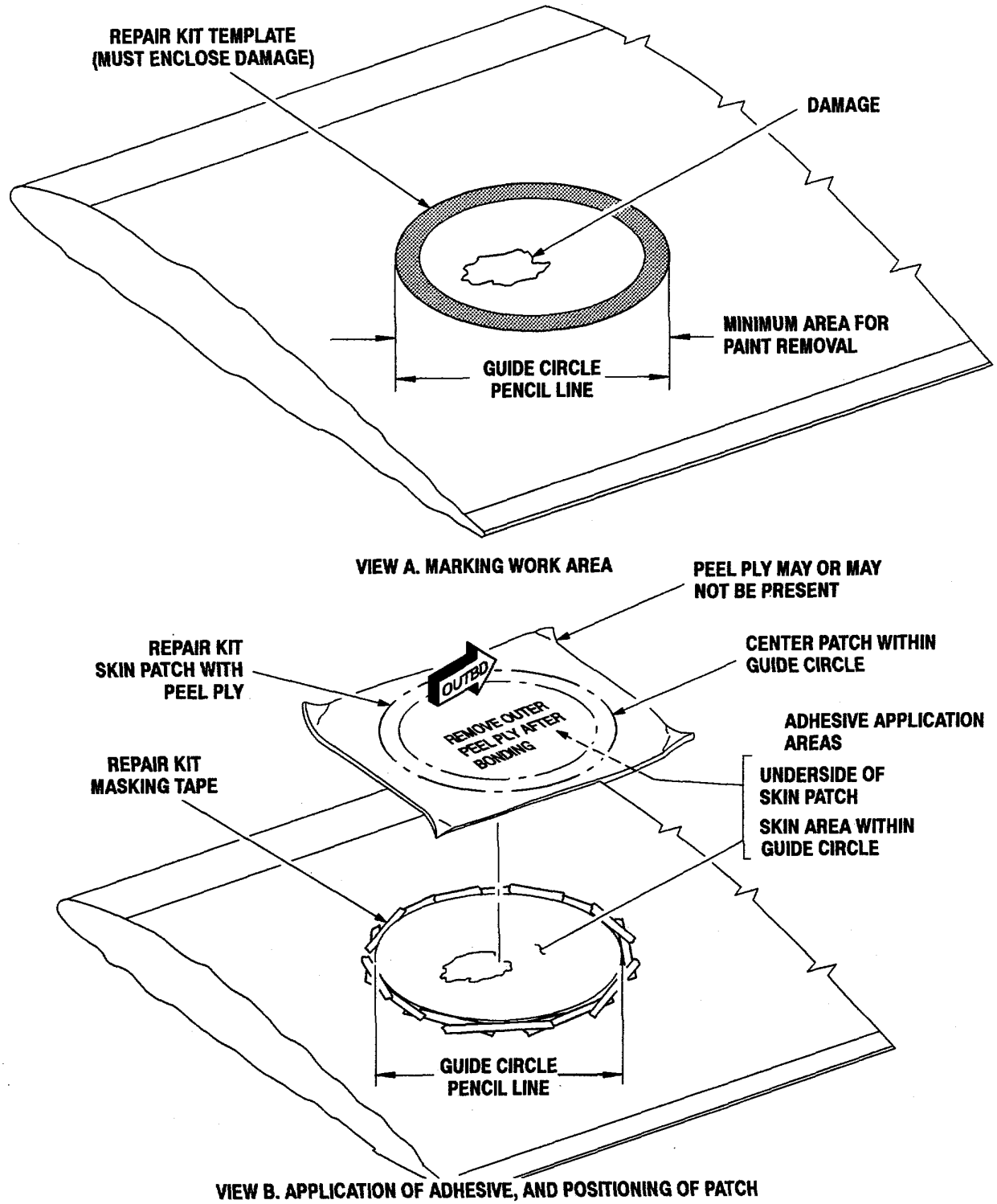

M102-110

Figure 5-3. Application of Skin Patch

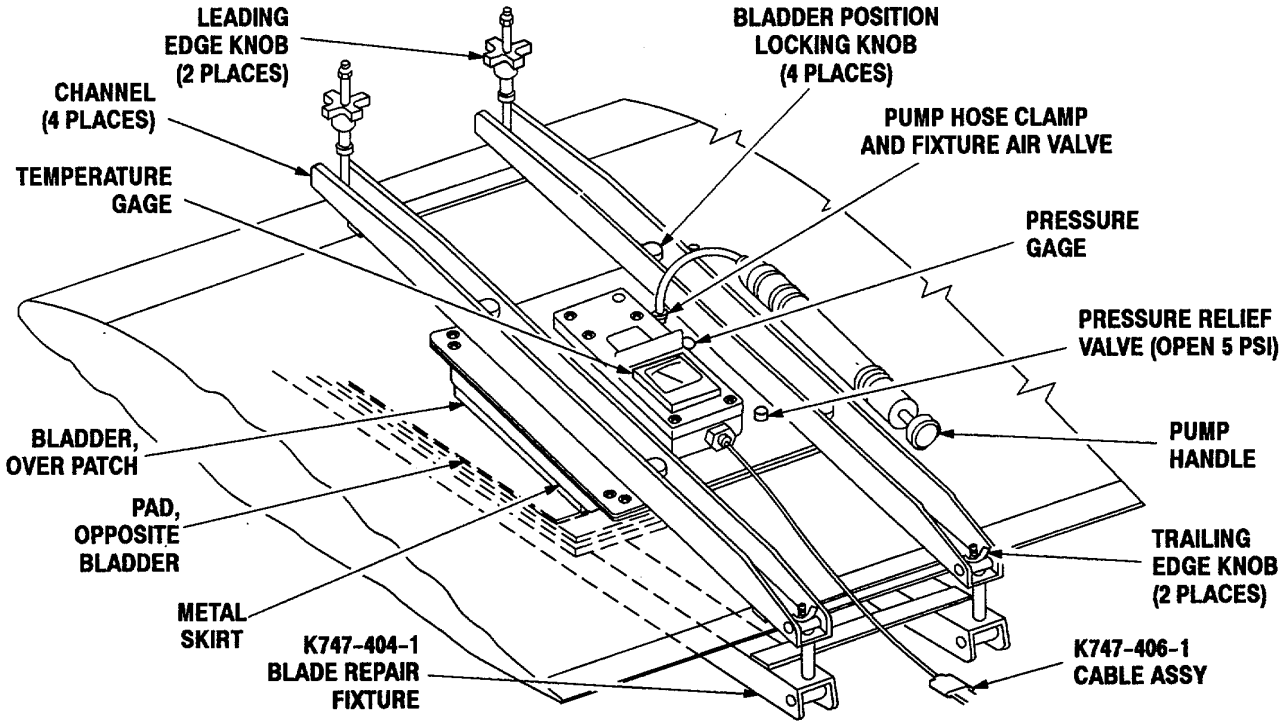

M102-112

Figure 5-4. Curing Patch with Blade Repair Fixture

5-8.1.3.3. Refinish Repair Area.

1. Remove peel-ply and masking tape from blade.

⚠CAUTION

Sanding skin fibers can weaken blade.

2. Using 220 or finer grit abrasive paper, feather edge of adhesive squeeze-out around patch.
3. Dampen cheesecloth with isopropyl alcohol and wipe off all sanding dust.
4. Paint repair of area is optional. Touch-up paint blade in accordance with TM 1-1520-238-23.
5. If repair was performed on helicopter, perform main rotor track and balance (TM 1-1520-238-T).
6. Record BDR action taken. When mission is complete, as soon as practical, repair equipment/system using standard maintenance procedures.

5-8.2. Option 2: Plug Patch Repair.

5-8.2.1. Personnel/Time Required:

- 1 person
- 5 hours

5-8.2.2. Materials/Tools Required:

- Appropriate size plug patch repair kit (Table 5-3)
- Adhesive (item 1, App C)
- Cloth (item 11, App C)
- Isopropyl alcohol (item 19, App C)
- Light duty laboratory apron (item 4, App B)
- Rasp type bit (item 5, App B)
- End milling cutter (item 13, App B)
- End mill (item 16, App B)
- Chemical protective gloves (item 19, App B)
- Blade repair fixture (item 23, App B)
- Adjustable air filtering respirator (item 28, App B)
- Router Assembly (item 30, App B)
- Aircraft mechanic's tool kit (item 39, App B)

5-8.2.3. Procedural Steps:

NOTE

- Enter repairs made on DA Form 2408-13-1/2408-13-1-E and DA Form 2408-16/2408-16-E. A permanent record on the DA Form 2408-16/2408-16-E must be main- tained. Once a skin or plug patch has been installed it is impossible to deter- mine which type of patch has been applied.
- Plug patch repair can be performed on blade after-body only (Figure 5-5 and 5-6).

5-8.2.3.1. Installation of Plug Patch (Figures 5-6 and 5-7).

NOTE

Damage deeper than skin can be repaired with a single patch. Damage that passes completely through blade and is larger than 1-inch diameter, will be repaired by installing plug patches from both top and bottom sides of blade. Install larger diameter and depth plug patch first (Figure 5-6).

1. Damaged blade will be positioned for access to damaged area. Support blade to prevent movement and droop.
2. Measure diameter and depth of damage.
3. Use plug patch repair kit, no larger than necessary to replace damage. Core voids of 1-square-inch or less in diameter are permitted after repair. Plug patch kits are available as shown in Table 5-3.

NOTE

If damage is between 3.25 inches and 4.25 inches from trailing edge, use 1/4 inch thick plug patch. If damage is between 4.25 inches and 6.75 inches from trailing edge, use 1/2 inch thick plug patch. If damage is between 6.75 inches and 10.25 inches from trailing edge, use 7/8 inch thick plug patch.

Table 5-3. Plug Patch Repair Kits

Kit Part No.	Diameter	Thickness
Rotary blade repair kit (item 32, App C)	3 inches	1/4 inch
Rotary blade repair kit (item 33, App C)	3 inches	1/2 inch
Rotary blade repair kit (item 34, App C)	3 inches	7/8 inch
Rotary blade repair kit (item 35, App C)	6 inches 1/4 inch	
Rotary blade repair kit (item 36, App C)	6 inches	1/2 inch

⚠CAUTION

Grease pencils will not be used. Only lead pencil lines will be made. Pencil marks other than those specified in the instructions can weaken repair.

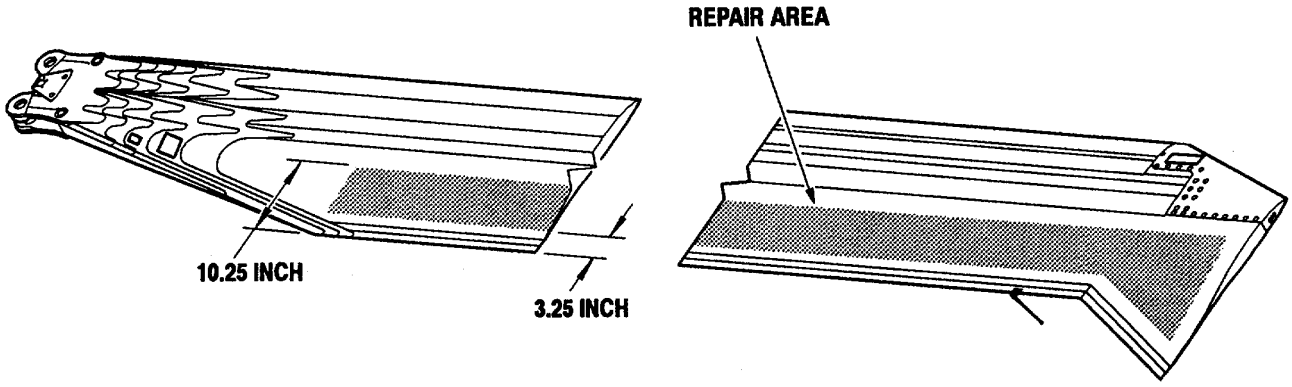

M102-215

Figure 5-5. AH-64A Apache Blade Repair Area

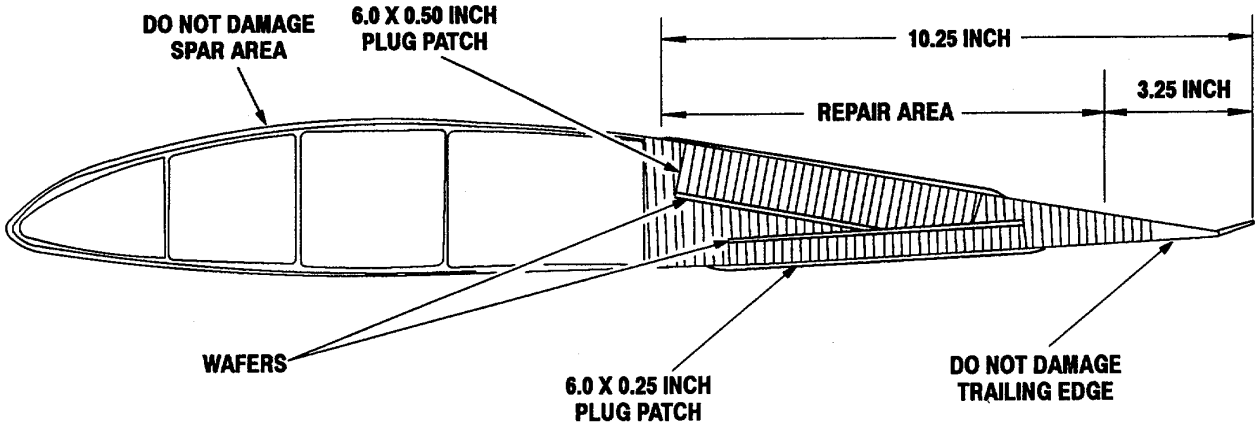

M102-114

Figure 5-6. Typical Double Plug Patch Repair

NOTE

Spar, core and trailing edge assembly areas underlying the skin can be verified by tapping blade surface with a coin and noting the difference in sound.

4. Place kit template on blade. Position inner circle to enclose damage. Keep template from slipping and draw pencil lines around inner and outer circles of template (Figure 5-7, view A).

⚠CAUTION

- Care must be taken to prevent isopropyl alcohol from entering core area of blade. Spillage must be avoided. Isopropyl alcohol can damage leading edge erosion guard.
- To prevent damaging the blade, sand metallic surfaces in a spanwise direction and sand glass skin surfaces in a chordwise direction.
- Do not sand through skin fibers. Sand only until primer coat color is removed.

5. Sand exterior paint and primer off blade surface in repair areas (between circles A and B). Start with 120 grit and finish with 220 grit abrasive paper (from kit). Sand only until primer is removed. Do not sand into skin fibers (Figure 5-7, view A).

6. Redraw circle A. This circle will be used as routing guideline.

WARNING

- Disconnect router cord from outlet before making adjustments, changing or installing bits or end mills.
- Ensure router switch is in off position before connecting router to electrical power.
- Keep hands and fingers away from rotating bits and end mills.
- Guide router with both hands on router grip.

⚠CAUTION

- Take every precaution not to damage the spar and trailing edge during routing.
- During all routing operations, keep the long dimension of router base in span-wise direction.
- End mills will burn out if used to cut skin.

7. Insert rasp-type bit in router collet. Set router depth of cut for 0.10 inch. Rout complete circle through skin, following inside of circle A (Figure 5-7, view B).

8. Using duckbill pliers, lift edge of cut circle of skin and peel skin off core (Figure 5-7, view B). After removing skin, check depth of core at trailing edge of circle. Core thickness at trailing edge side which is less than depth of selected plug will require shallower plug.

9. Insert end mill in router collet. Set router depth of cut to match depth of plug plus thickness of kit wafer (Figure 5-7, view C). Rout out core. First rout a complete circle, following inside circle A. Then rout out remainder of core moving router in chordwise direction (Figure 5-7, view D).

10. Wipe off all cuttings and sanding dust from repair area.
11. Using template, redraw circle B.
12. Cut short lengths of masking tape and mask around outside of circle B (Figure 5-7, view D).

⚠CAUTION

- Care must be taken to prevent isopropyl alcohol from entering core area of blade. Spillage must be avoided. Isopropyl alcohol can damage leading edge erosion guard.
- Surface to be bonded must be clean, dry, and free of finger prints and all foreign matter.

13. Dampen clean cheesecloth with isopropyl alcohol and clean skin inside masked area. Clean both sides of kit wafer and underside of plug-patch flange. Wipe with clean, dry cheesecloth before dampness evaporates.
14. Insert wafer into repair area and trim if necessary. Remove wafer.

15. If core voids of 1-square-inch or greater exist, use sealing compound to fill voids.

NOTE

Mix sufficient amount of adhesive to complete the repair. Pot life of adhesive varies depending on amount mixed. Repair procedure must be completed without delay once adhesive has been mixed.

16. Mix adhesive in accordance with manufacturers instructions. Using clean 1-inch brush (from kit) apply liberal coat of adhesive to one side of wafer (Figure 5-7, view D).
17. Place wafer in routed cavity with adhesive side down.

⚠CAUTION

Adhesive should not be packed into cells of blade core or plug patch. Excess adhesive can cause blade to be out of balance.

18. Using brush, apply coat of adhesive to walls of cavity in blade core.
19. Using brush, apply coat of adhesive to blade skin in masked off area around core cavity, plug patch flange surrounding plug, outside diameter of plug, and second side of wafer (one side of wafer was previously coated and placed in step 16).
20. Position plug patch in cavity with stenciled arrow pointing outboard (spanwise) and press firmly into place. Use hand pressure to squeeze patch area overlapping blade skin to expel excess adhesive and air bubbles.

⚠CAUTION

Care must be taken to prevent isopropyl alcohol from entering core area of blade. Spillage must be avoided. Isopropyl alcohol can damage leading edge erosion guard.

21. Using clean cheesecloth dampened with isopropyl alcohol, temporarily lift edges of peel-ply (if installed) and wipe off excess adhesive.
22. Place masking tape over edge of patch in four places to prevent movement. Place two long pieces of masking tape at right angles, centered over patch spanwise and chordwise and extending beyond dimensions of blade repair fixture bladder.
23. If peel ply is not installed on patch, place sheet of peel ply over repair area and tape into place.

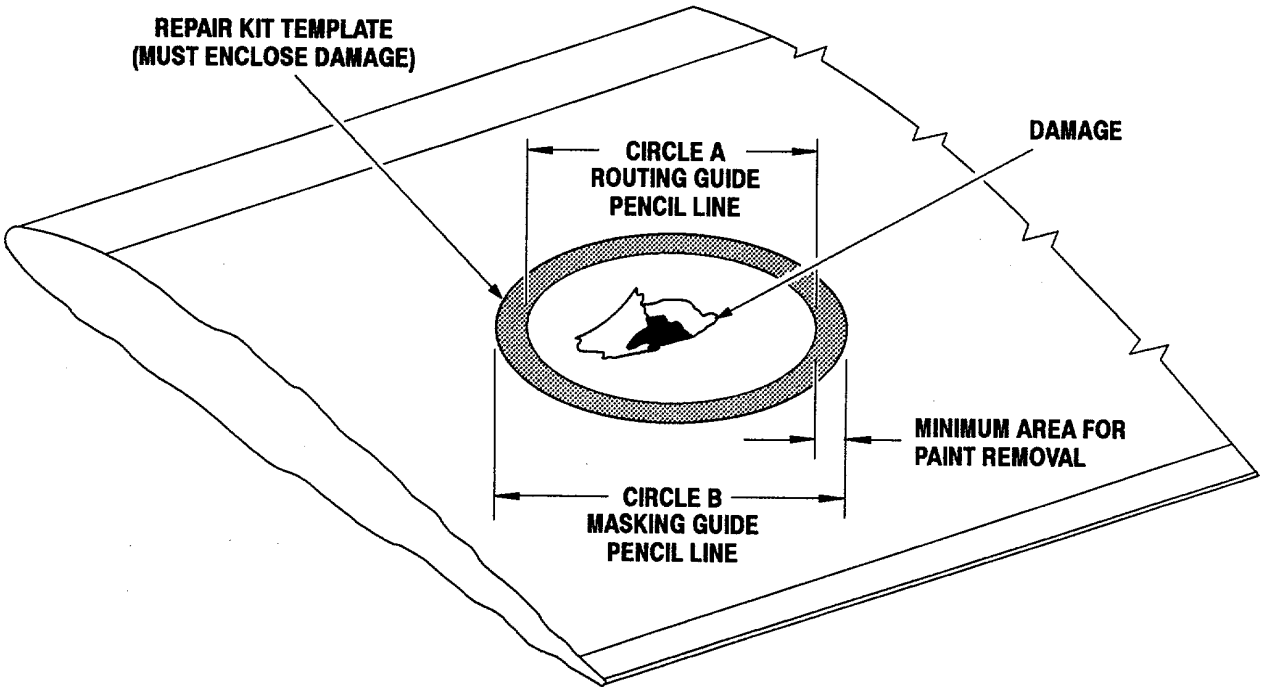

VIEW A. MARKING WORK AREA

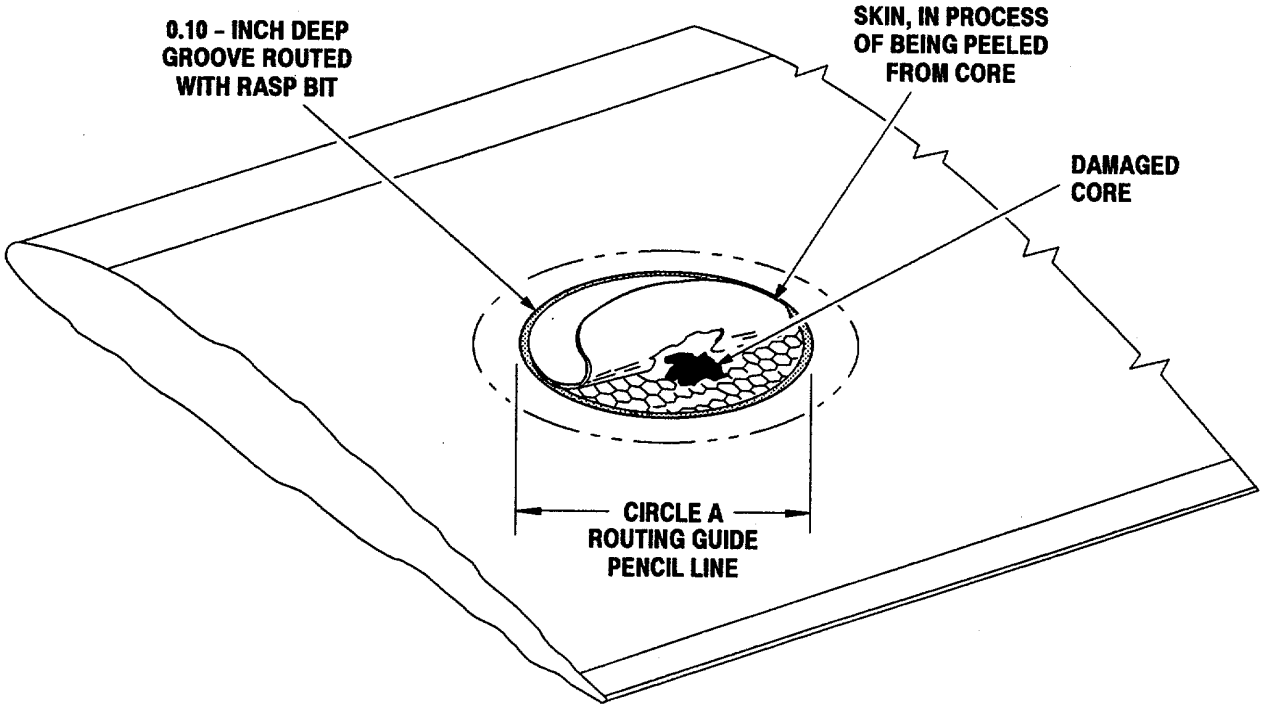

VIEW B. REMOVAL OF DAMAGED SKIN

M102-113-1

Figure 5-7. Installation of Plug Patch (Sheet 1 of 2)

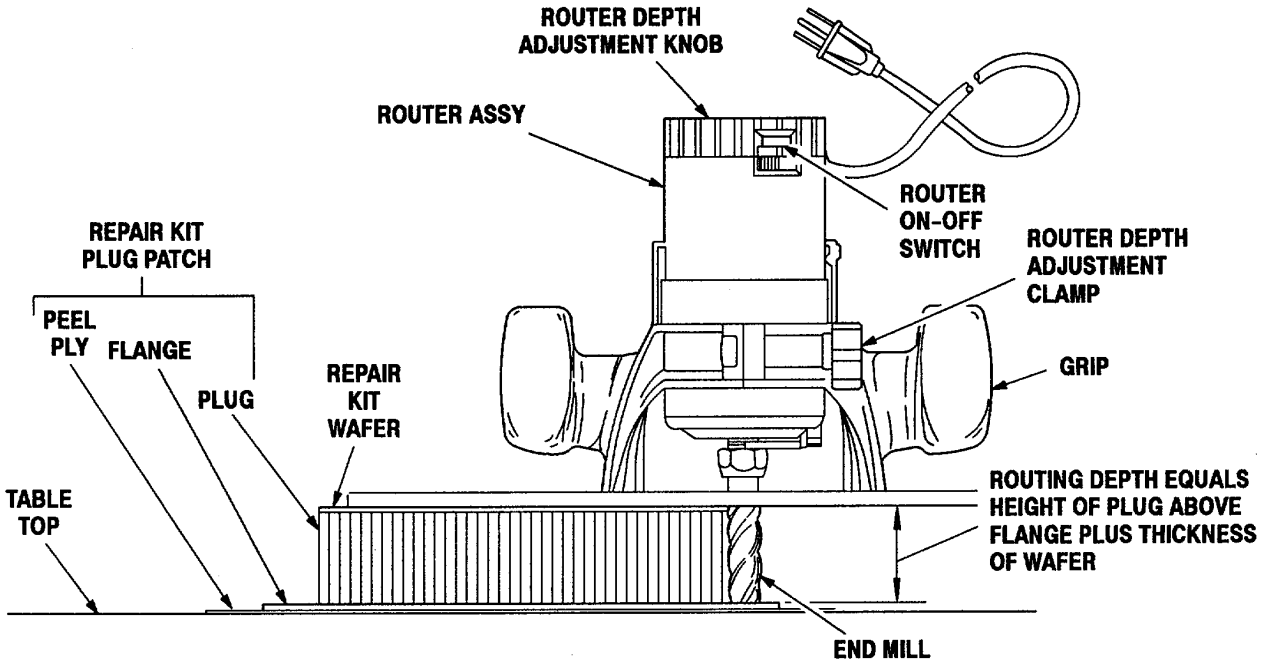

VIEW C. SETTING ROUTER DEPTH

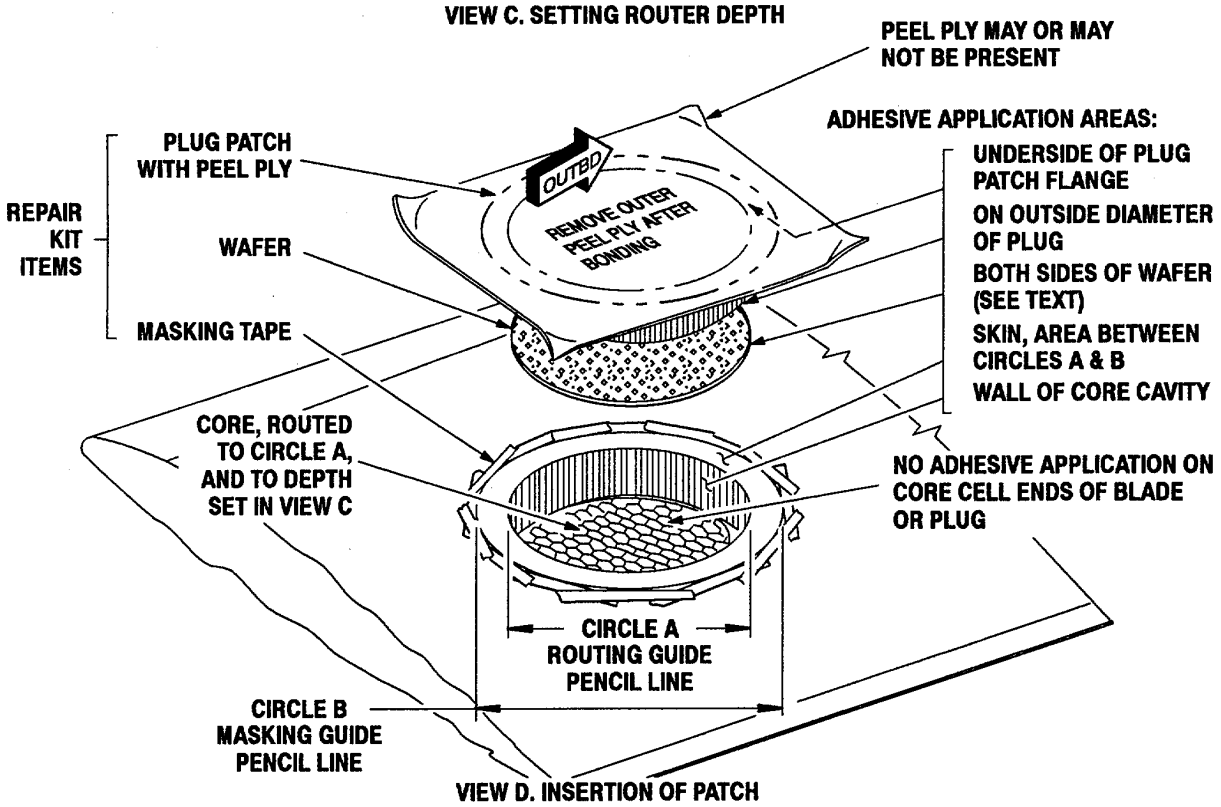

VIEW D. INSERTION OF PATCH

M102-113-2

Figure 5-7. Installation of Plug Patch (Sheet 2 of 2)

5-8.2.3.2. Install Blade Repair Fixture (Figure 5-4).

CAUTION

Do not damage blade trailing edge section during removal/installation of blade re-pair fixture.

NOTE

If blade repair fixture is not available, use suitable material placed on top of repair to apply even pressure during adhesive cure. Cure time is increased to 24 hours at minimum of 60° F (15° C).

1. Install repair fixture from trailing edge side of blade only.
2. Center bladder over repair area and secure.
3. Center pad opposite bladder and secure.

CAUTION

Tightening of locking knobs so that metal skirt around bladder is closer than 0.125 inch to blade can damage blade.

4. Tighten fixture channel locking knobs until metal skirt around bladder is approximately 0.125 inch from blade skin.
5. Actuate hand pump to obtain 4 psi reading on pressure gage. Disconnect pump hose clamp from air valve.

CAUTION

If 110-volt AC electrical power or a heat source is unavailable at time of repair, required cure time is increased to 24 hours minimum.

NOTE

During curing process, it may be necessary to periodically reconnect hose and actuate pump to maintain 4 psi.

6. Connect 110-volt AC electrical power to bladder re- pair fixture. Cure repair area at 150 - 180° F (65 - 82°C) for 90 minutes.
7. When curing time is complete, disconnect electrical power and allow cool down of 15 minutes.
8. Relieve air pressure by lifting center portion of relief valve.
9. Remove repair fixture from blade.

5-8.2.3.3. Refinish Repair Area.

1. Remove peel-ply and masking tape from blade.

CAUTION

Sanding skin fibers can weaken blade.

2. Using 220 or finer grit abrasive paper, feather edge of adhesive squeeze-out around patch.
3. Dampen cheesecloth with isopropyl alcohol and wipe off all sanding dust.
4. Paint repair of area is optional. Touch-up paint blade in accordance with TM 1-1520-238-23.
5. If repair was performed on helicopter, perform main rotor track and balance (TM 1-1520-238-T).
6. Record BDR action taken. When mission is complete, as soon as practical, repair equipment/system using standard maintenance procedures.

CHAPTER 6
DRIVE SYSTEM

BDAR TM PROCEDURES. THE EXPEDIENT REPAIR PROCEDURES IN BDAR TM ARE FOR USE IN COMBAT ONLY. STANDARD MAINTENANCE/REPAIR PROCEDURES ARE TO BE USED AS SOON THEREAFTER AS POSSIBLE.

6-1. SCOPE.

This chapter contains description, location, serviceability criteria, and cannibalization criteria for the drive system. Repair of battle damage to the drive system during combat may be deferrable depending on the damage or component function.

6-2. SYSTEM DESCRIPTION AND LOCATION.

The drive system consists of the drive shaft subsystem, nose gearboxes, main transmission, intermediate gearbox, and the tail rotor gearbox. Refer to TM 1-1520-238-T for detailed description and operation of specific drive system components.

6-2.1. Drive Shaft Subsystem (Figure 6-1). The drive shaft subsystem consists of the following: eight drive shafts, two anti-flail assemblies, two damper assemblies, two hanger bearing assemblies, and ten flexible couplings. The components of the drive shaft system are located in various locations of the aircraft, but are primarily located between the main transmission and the tail rotor gearbox on the upper side of the aircraft.

6-2.2. Nose Gearbox (Figure 6-2). The nose gearbox consists of the following:vaneaxial cooling fan, oil level sight glass, oil filter with a bypass indicator, oil filler plug, and condition monitoring sensors. The monitoring sensors include a chip detector/temperature sensor, pressure and temperature transducers, and a pressure switch. There is one nose gearbox mounted at the front of each engine.

6-2.3. Main Transmission (Figure 6-3). The main transmission consists of the following: oil level sight glasses, oil pumps, diverter valves, oil filters with bypass indicators, and condition monitoring sensors. The monitoring sensors include a chip detector/temperature sensor, pressure and temperature transducers, and pressure switches. The main transmission is located in the main transmission bay at F.S. 200.

6-2.4. Intermediate Gearbox (Figure 6-4). The intermediate gearbox consists of the following: cooling fan, input flange, output flange, and temperature and B vibration monitors. The gearbox is mounted to the lower end of the vertical stabilizer at F.S. 504.

6-2.5. Tail Rotor Gearbox (Figure 6-5). The tail rotor gearbox consists of the following: input flange, static support, output drive shaft, and temperature and vibration monitors. The gearbox is mounted at the top of the vertical stabilizer at F.S. 559.

6-3. ASSESSMENT PROCEDURE.

The components of the drive system are susceptible to ballistic damage or operationally induced damage such as sudden stops andoverspeeds. Assess damage to determine if repair or cannibalization is necessary. Types of major damage that may be encountered during assessment are gouges, nicks, holes, bends, distortions, or dents.

6-4. SERVICEABILITY CRITERIA.

Serviceability criteria provides each drive subsystem with general and specific criteria. When a critical area or component is damaged and the serviceability criteria for the specific type of damage is not presented, TM 1-1520-238-23 inspection criteria shall be utilized. When non-critical areas or components are damaged, most instances will result in deferred repair. When any damage is deferred, periodic inspections shall be performed to monitor damage growth.

6-4.1. Drive System General Serviceability Criteria.

a. Loose, missing, or damaged hardware is not allowed, unless specifically mentioned in the specific serviceability criteria.

b. Nicks, gouges, and scratches on gearboxes which do not develop into leaks are acceptable.

c. Scratches where paint has been removed are acceptable.

d. Table 6-1 provides drive system components expanded combat damage criteria.

e. Table 6-2 provides inspection criteria for the transmission and gearboxes oil/grease systems.

6-4.2. Drive System Specific Serviceability Criteria.

a. Inspect intermediate gearbox and nose gearbox input fans and shrouds for cracks, broken blades, or deformation.

(1) Cracks are not allowed.

(2) Nicks, gouges, and scratches are allowed. Maximum depth of material removed is specified in TM I-1520-238-23.

b. Inspect fan enclosure for cracks, nicks, gouges, and scratches.

(1) Cracks are not allowed.

(2) Nicks, gouges, and scratches are allowed. Maximum depth of material removed is specified in TM 1-1520-238-23.

c. Inspect heat exchanger for damaged fins, as specified in TM 1-1520-238-23.

Table 6-1. Drive System Components Expanded Combat Damage Criteria

Nomenclature	Part Number	Damage Criteria
Main Rotor Drive Shaft	7-211350021	Pitting is allowed in spline area.
		Nicks, gouges, and scratches are allowed on shaft per TM 1-1520-238-23.
Main Transmission Input Shaft, Tail Rotor Common Drive Shaft, Tail Rotor Short Shaft, and APU Drive Shaft	19E202-1ACL85, 19E203-ACL107, 19E203-1ACL98, and 19E205-3A	Nicks, gouges, and scratches are allowed. Maximum depth of material removed is specified in TM 1-1520-238-23. Damage must be blended out. Corrosion must be blended out as specified in TM 1-1520-238-23.
Forward Anti-Flail Assembly, Aft Anti-Flail Assembly, APU Anti-Flail, Forward Damper Assembly, and Aft Damper Assembly	7-211350010, 7-311350014, 7-311350020, 7-211350011, 7-211350012	Nicks, gouges, and scratches are allowed as specified in TM 1-1520-238-23.
Forward Hanger Bearing and Aft Hanger Bearing	19E203-5ACL95 and 19E203-4ACL96	Nicks, gouges, and scratches are allowed on flange as specified in TM 1-1520-238-23. Nicks, gouges, and scratches are allowed on non-flange areas as specified in TM 1-1520-238-23.

Table 6-1. Drive System Components Expanded Combat Damage Criteria - Cont

Nomenclature	Part Number	Damage Criteria
Engine Nose Gearbox Flexible Coupling, Main Transmission Input Flexible Coupling, Tail Rotor Common Flexible Coupling	19E202-1ACL84, 19E202-1ACL86, and 19E203-1ACL97	Nicks, gouges, and scratches are allowed on diaphragm area A as specified in TM 1-1520-238-23 (Figure 6-1) Nicks, gouges, and scratches are allowed on diaphragm area B as specified in TM 1-1520-238-23 (Figure 6-1) Nicks, gouges, and scratches are allowed on guard and flange as specified in TM 1-1520-238-23. Loose guard must be completely removed without disassembling unit.
Main Transmission, LH or RH Nose Gearboxes, Intermediate Gearbox, and Tail Rotor Gearbox	7-311310001-39, 7-311320001-5/-6, 7-311330001-3, 7-311340001-7	Seepage/leakage from oil lubricated housings and/or the lube pump is acceptable per TM 1-1520-238-23. The main transmission can lose up to three quarts of lubricant per mission sortie. The engine nose gearbox is only permitted to sustain a loss of 0.5 pint of lubricant per mission sortie. Seepage/leakage from grease lubricated gearbox housings and/or input/output seal is acceptable. The intermediate gearbox and tail rotor gearbox leakage rate should not exceed six ounces of lubricant leakage per mission sortie. The nose gearbox, intermediate gearbox, and tail rotor gearbox are allowed to have broken or damaged cooling fins as specified in TM 1-1520-238-23.

Table 6-2. Drive System Components Oil System Combat Inspection Criteria

Nomenclature	Combat Sample Interval	Sample Evaluation Method	Inspection Criteria	Maintenance Action
Main Transmission	On-Condition	Remove chip detector and oil filter for inspection.	1. For steel splinters or metal particles, refer to TM 1-1520-238-23. 2. For granular steel, steel splinters, or all other metal particles refer to TM 1-1520-238-23.	1. Remove and replace main transmission. 2. Clean chip detector. Replace oil filter when filter by-pass accompanies a chip detector light.

Table 6-2. Drive System Components Oil System Combat Inspection Criteria - Cont

Nomenclature	Combat Sample Interval	Sample Evaluation Method	Inspection Criteria	Maintenance Action
LH or RH Nose Gearbox	On-Condition	Remove chip detector and oil filter for inspection.	1. For steel splinters or metal particles, refer to TM 1-1520-238-23. 2. For granular steel, steel splinters, or all other metal particles refer to TM 1-1520-238-23..	1. Remove and replace nose gear-box. 2. Clean chip detector. Replace oil filter when filter by- pass accompanies a chip detector light.
Intermediate Gearbox	On-Condition	None	1. Vibration light with temperature light. 2. Vibration light without temper-ature light 3. Temperature light without vibration light.	1. Remove and replace inter-mediate. gearbox. 2. Check for loose connections. 3. Check grease level.
Tail Rotor Gearbox	On-Condition	None	1. Vibration light with temperature light. 2. Vibration light without temper-ature light 3. Temperature light without vibrat-ion light	1. Remove and replace tail rotor gearbox. 2. Check for loose connections. 3. Check grease level.

NOTE

Damage limits are maximum allowed without repair and blending is not required unless specified. However, damage should be blended out whenever possible.

6-4.3. Drive System Component Housing Damage Criteria. Figures 6-6 thru 6-9 illustrate the drive system component housings which are vulnerable to high stress loads. The high stress areas are identified by shading. The shaded areas of these components should be inspected periodically to ensure serviceability. Damage limits for the housings are found in the following tables:

a. Table 6-3 provides main transmission housing damage criteria.

b. Table 6-4 provides engine nose gearbox housing damage criteria.

c. Table 6-5 provides intermediate gearbox housing damage criteria.

d. Table 6-6 provides tail rotor gearbox housing damage criteria.

Table 6-3. Main Transmission Housing Damage Criteria

Non-Critical Area	Critical Area (High Stress) (Figure 6-6)
For maximum depth of material removed without repair, refer to TM 1-1520-238-23	For maximum depth of material removed without repair, refer to TM 1-1520-238-23.
NOTE Damage limits are maximum allowed without repair and blending is not required unless specified. However, damage should be blended out whenever possible.	

Table 6-4. Engine Nose Gearbox Housing Damage Criteria

Non-Critical Area	Critical Area (High Stress) (Figure 6-7)
For maximum depth of material removed without repair, refer to TM 1-1520-238-23.	For maximum depth of material removed without repair, refer to TM 1-1520-238-23.
NOTE Damage limits are maximum allowed without repair and blending is not required unless specified. However, damage should be blended out whenever possible.	

Table 6-5. Intermediate Gearbox Housing Damage Criteria

Non-Critical Area	Critical Area (High Stress) (Figure 6-8)
For maximum depth of material removed without repair, refer to TM 1-1520-238-23.	For maximum depth of material removed without repair, refer to TM 1-1520-238-23.
NOTE Damage limits are maximum allowed without repair and blending is not required unless specified. However, damage should be blended out whenever possible.	

Table 6-6. Tail Rotor Gearbox Housing Damage Criteria

Non-Critical Area	Critical Area (High Stress) (Figure 6-9)
For maximum depth of material removed without repair, refer to TM 1-1520-238-23.	For maximum depth of material removed without repair, refer to TM 1-1520-238-23.
NOTE Damage limits are maximum allowed without repair and blending is not required unless specified. However, damage should be blended out whenever possible.	

6-5. CANNIBALIZATION CRITERIA.

The drive system components that are considered crucial during combat are identified by the drive system cannibalization candidates list (Table 6-7). Whenever possible, these components should be cannibalized from other aircraft that are incapable of returning to base or considered unable to fly. This list is a prediction based on evaluations of the components' susceptibility of damage, deferrability, and repairability. This is not an exhaustive list of all components which may be cannibalized. When needed, any component may be cannibalized and used provided it is acceptable using the serviceability criteria provided.

Table 6-7. Drive System Cannibalization Candidates

Nomenclature	Part Number
Main Transmission Heat Exchanger (Figure 6-3, sheet 2)	09E20-2
Main Transmission (Figure 6-3, sheet 1)	7-311310001-39
Tail Rotor Common Drive Shaft (Figure 6-1)	19E203-1ACL107
Engine Nose Gearbox (Figure 6-2)	7-311320001-5 (LH) 7-311320001-6 (RH)
Tail Rotor Gearbox (Figure 6-5)	7-311340001-7
Tail Rotor Short Shaft (Figure 6-1)	19E203-1ACL98
Main Rotor Drive Shaft (Figure 6-1)	7-211350021
Engine Nose Gearbox Quill Shaft (Figure 6-2)	7-211320093
Engine Nose Gearbox Vaneaxial Fan (Figure 6-2)	7-311322001
Main Transmission Input Clutch Assembly (Figure 6-3, sheet 1)	7-311310003-9
Main Transmission Input Shaft (Figure 6-1)	19E202-1ACL85
Intermediate Gearbox (Figure 6-4)	7-311330001-3
Engine Nose Gearbox Flexible Coupling (Figure 6-1)	19E202-IACL84
Main Transmission Input Flexible Coupling (Figure 6-1)	19E202-IACL86
Tail Rotor Common Flexible Coupling (Figure 6-1)	19E203-1ACL97
APU Drive Anti-Flail (Figure 6-1)	7-311350020-7
Main Transmission NR Sensor (Magnetic Pickup) (Figure 6-3, sheet 1)	7-311310112-9
Main Rotor Drive Plate (Figure 5-1, sheet 2)	7-211310098
Main Transmission Filter Bowl (primary) (Figure 6-3, sheet 1)	7586160 or AC-B066BP-1
Main Transmission Oil Pump (primary) (Figure 6-3, sheet 2)	7-311310101
Engine Nose Gearbox Mounting Adapter (Figure 6-2)	7-113220020-9

Table 6-7. Drive System Cannibalization Candidates - Cont

Nomenclature	Part Number
Main Transmission Filter Bowl (accessory) (Figure 6-3, sheet 1)	AE-B730-2
Main Transmission Oil Pump (accessory) (Figure 6-3, sheet 1)	7-113100102-3
Heat Exchanger Valve Assembly (Figure 6-3, sheet 2)	10E13-1
Main Transmission Float Diverter Valve Assembly (Figure 6-3, sheet 2)	V-83-1
APU Drive Shaft (Figure 6-1)	19E205-3A

6-6. REPAIR PROCEDURE INDEX.

Refer to TM 55-1500-323-24 for electrical wiring repairs. Refer to TM 1-1520-238-23 for specific drive system component removal/installation procedures.

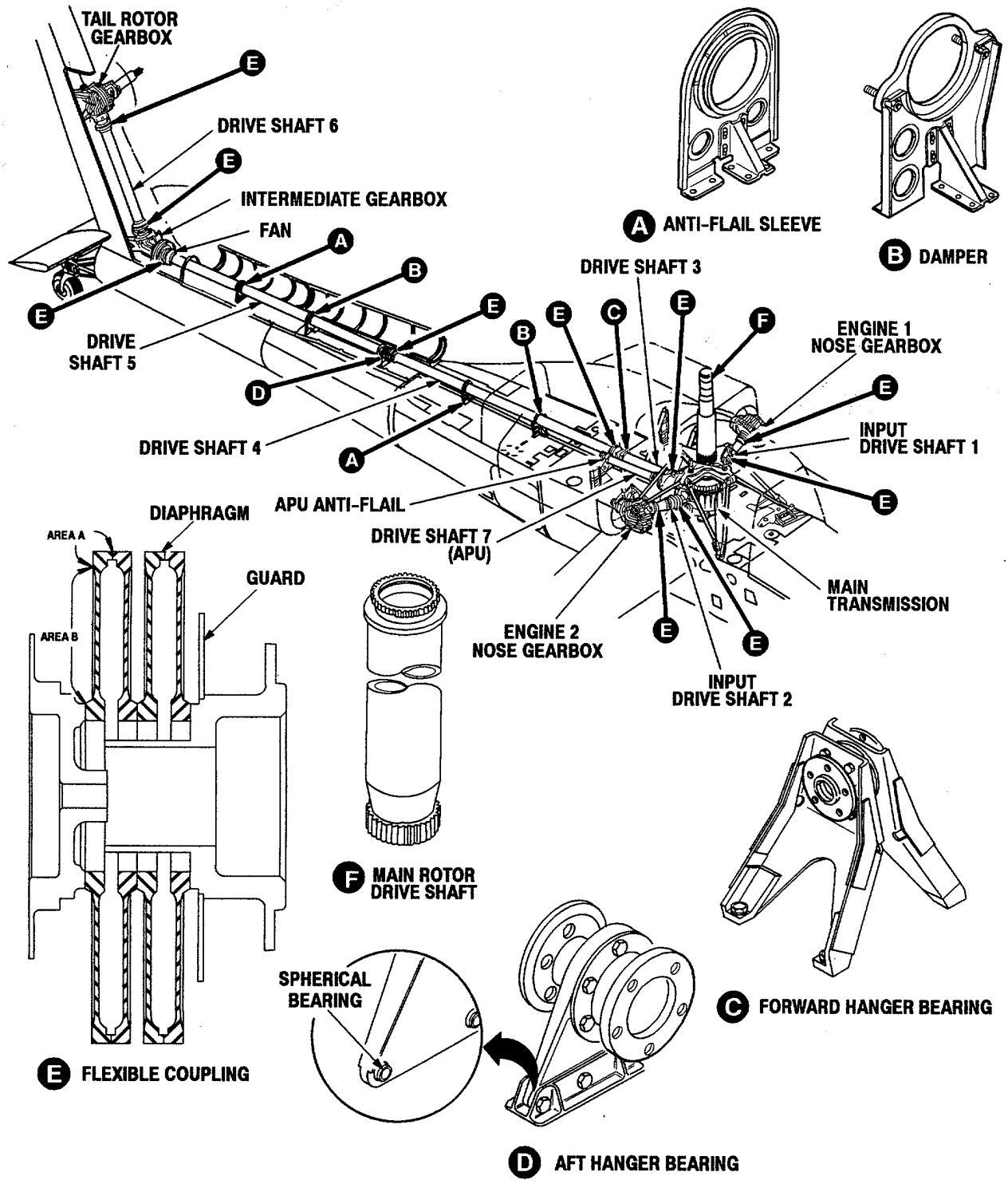

M102-097

Figure 6-1. Drive Shaft Subsystem Component Location

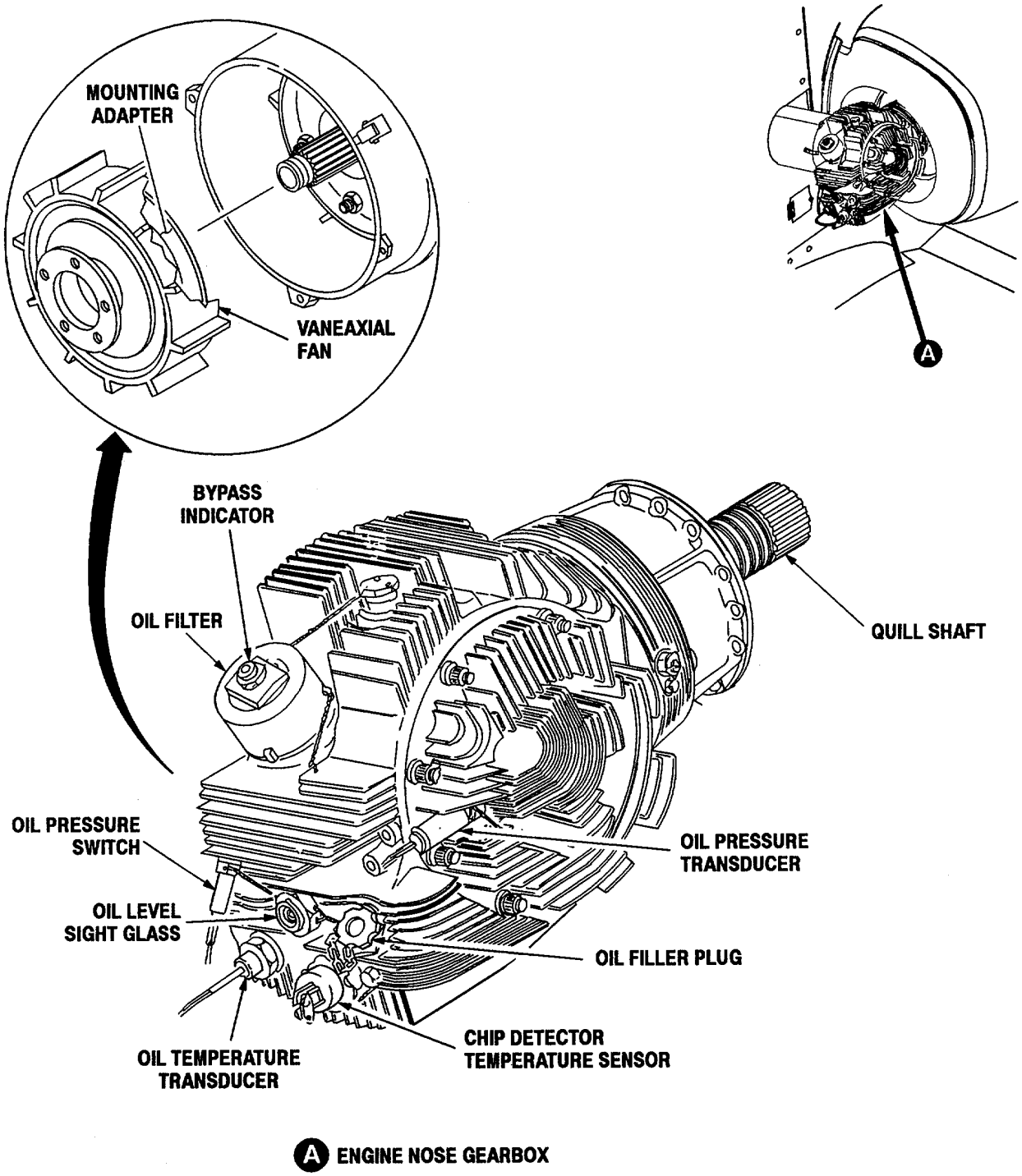

Figure 6-2. Nose Gearbox Component Location

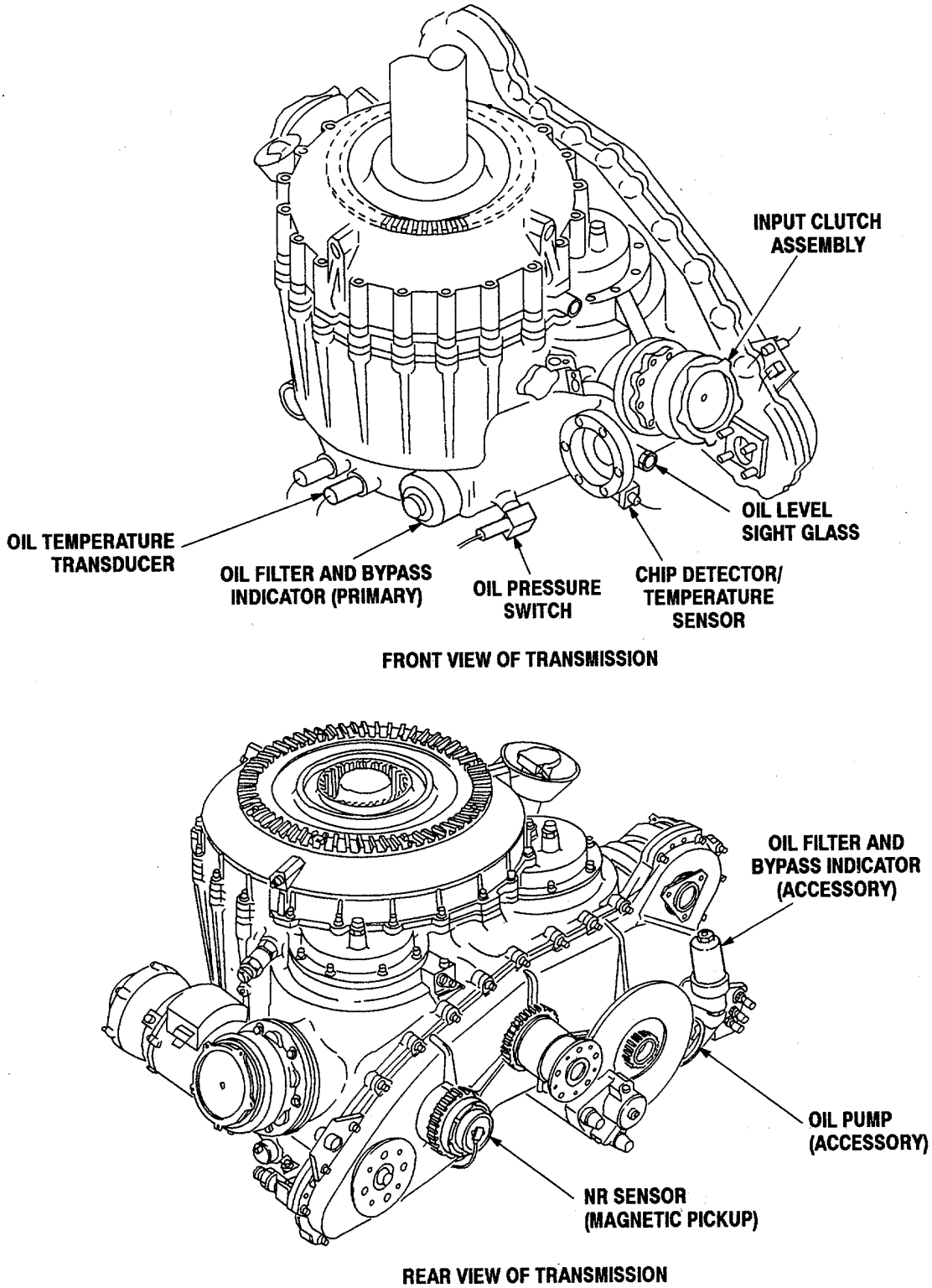

Figure 6-3. Main Transmission Component Location (Sheet 1 of 2)

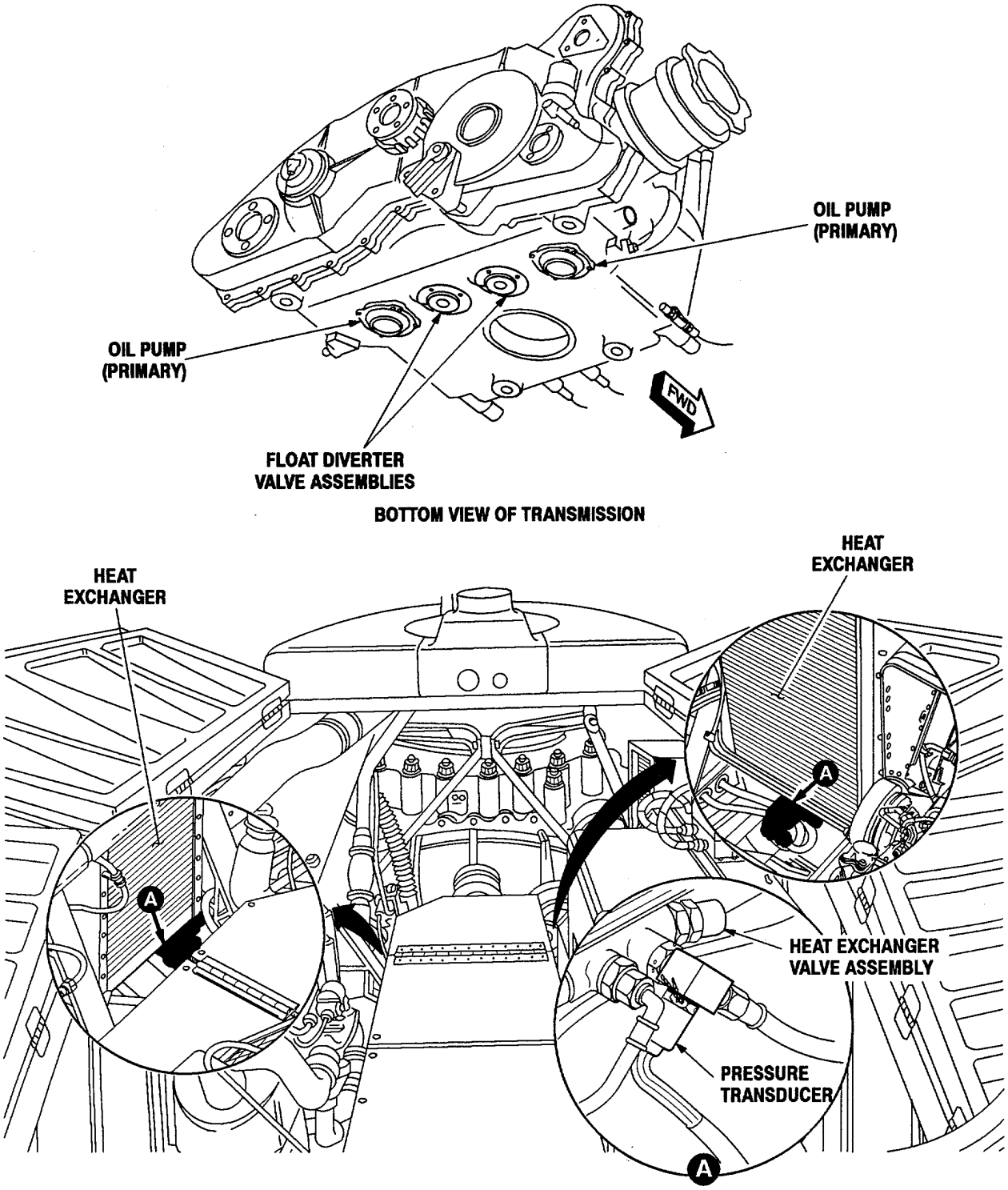

Figure 6-3. Main Transmission Component Location (Sheet 2 of 2)

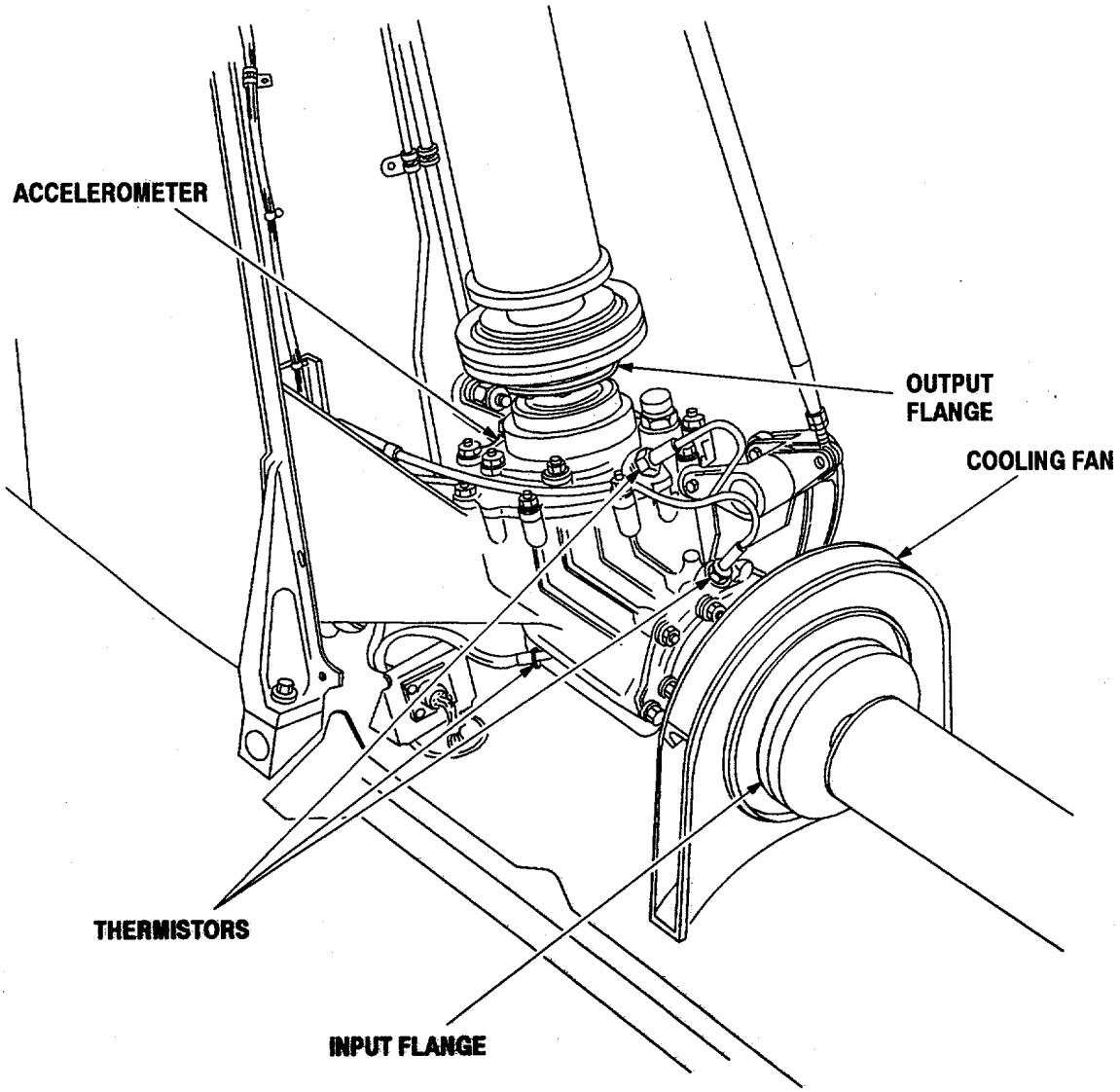

Figure 6-4. Intermediate Gearbox Component Location

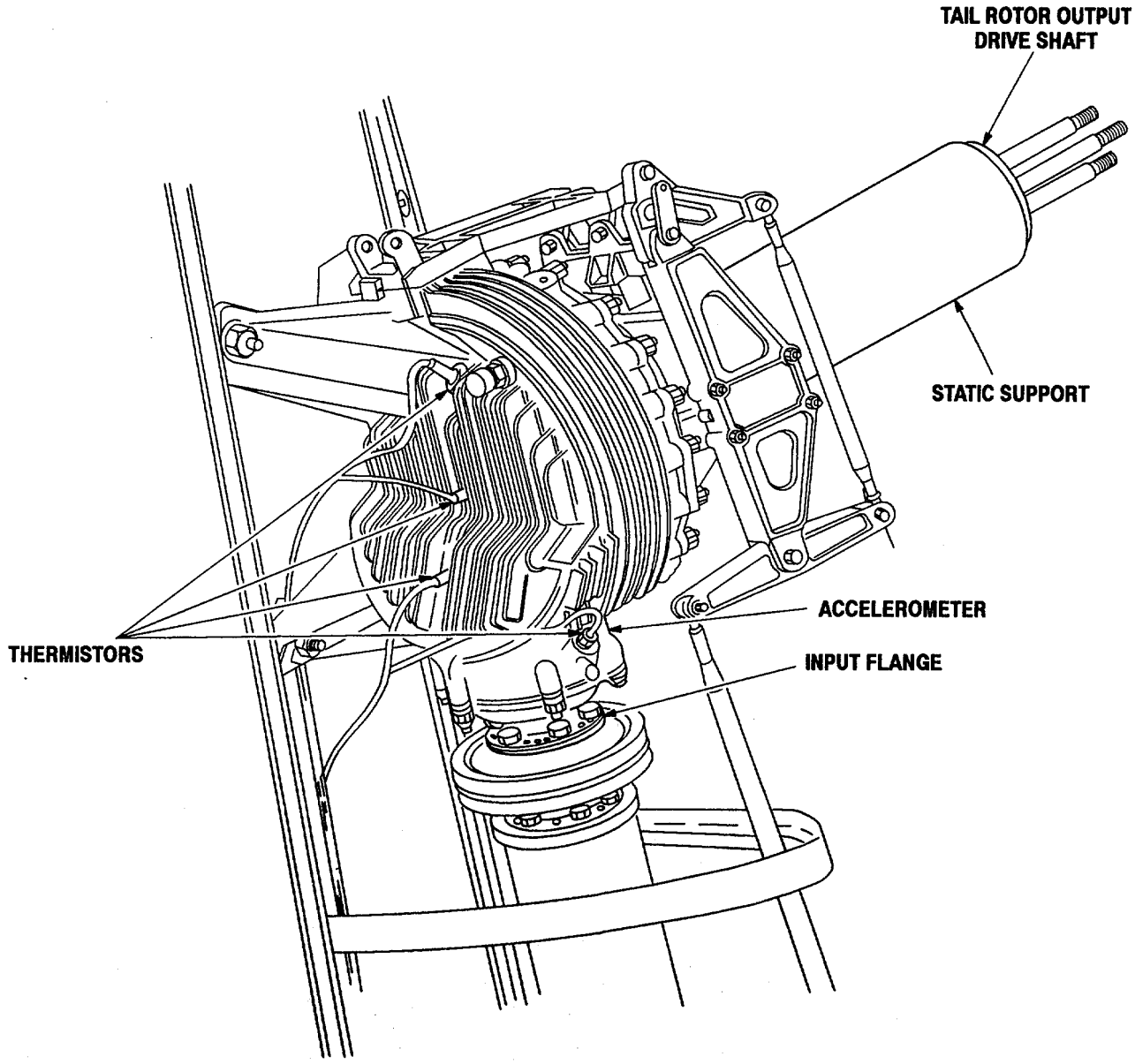

Figure 6-5. Tail Rotor Gearbox Component Location

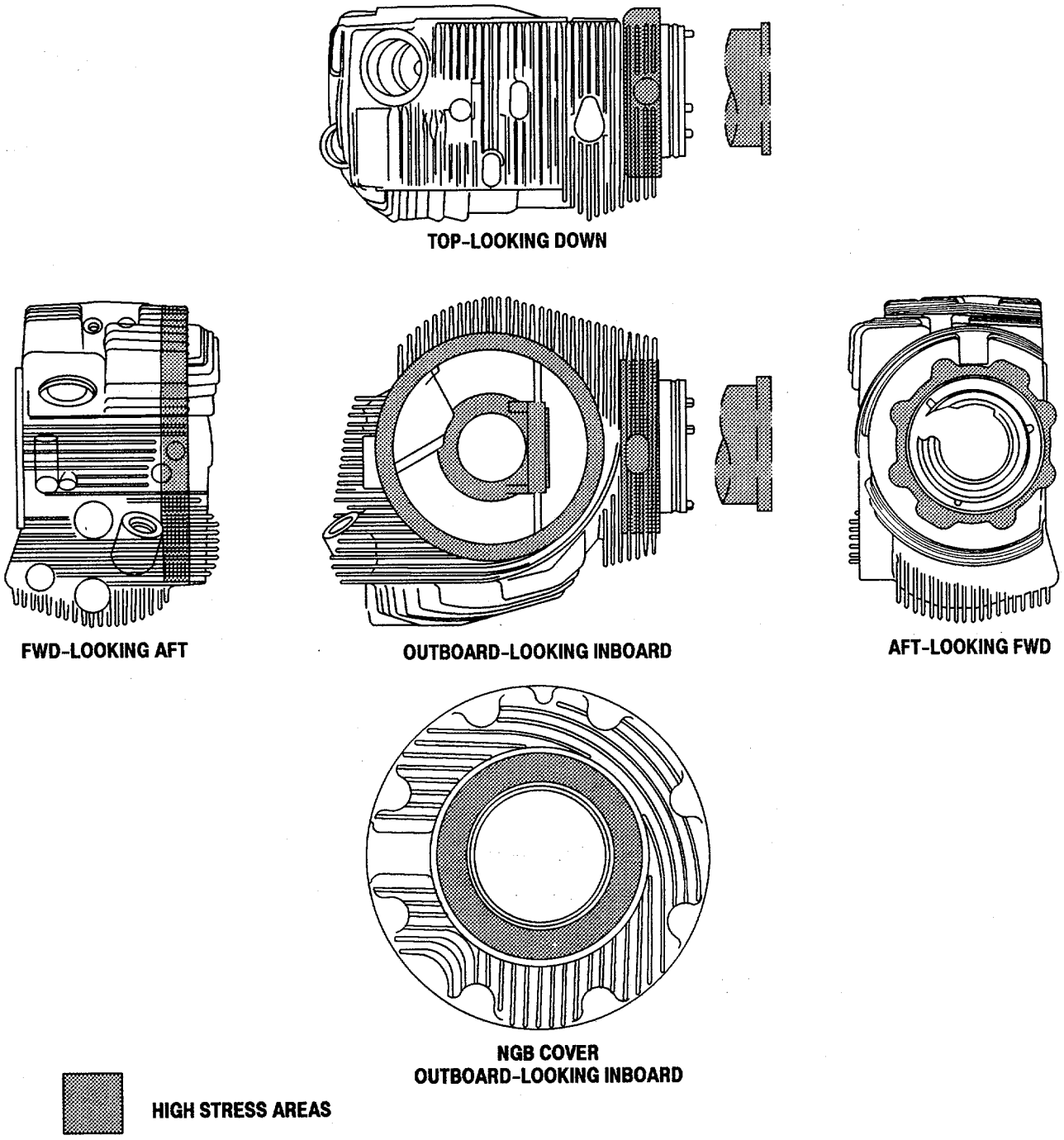

Figure 6-6. Engine Nose Gearbox Housing and Cover High Stress Areas

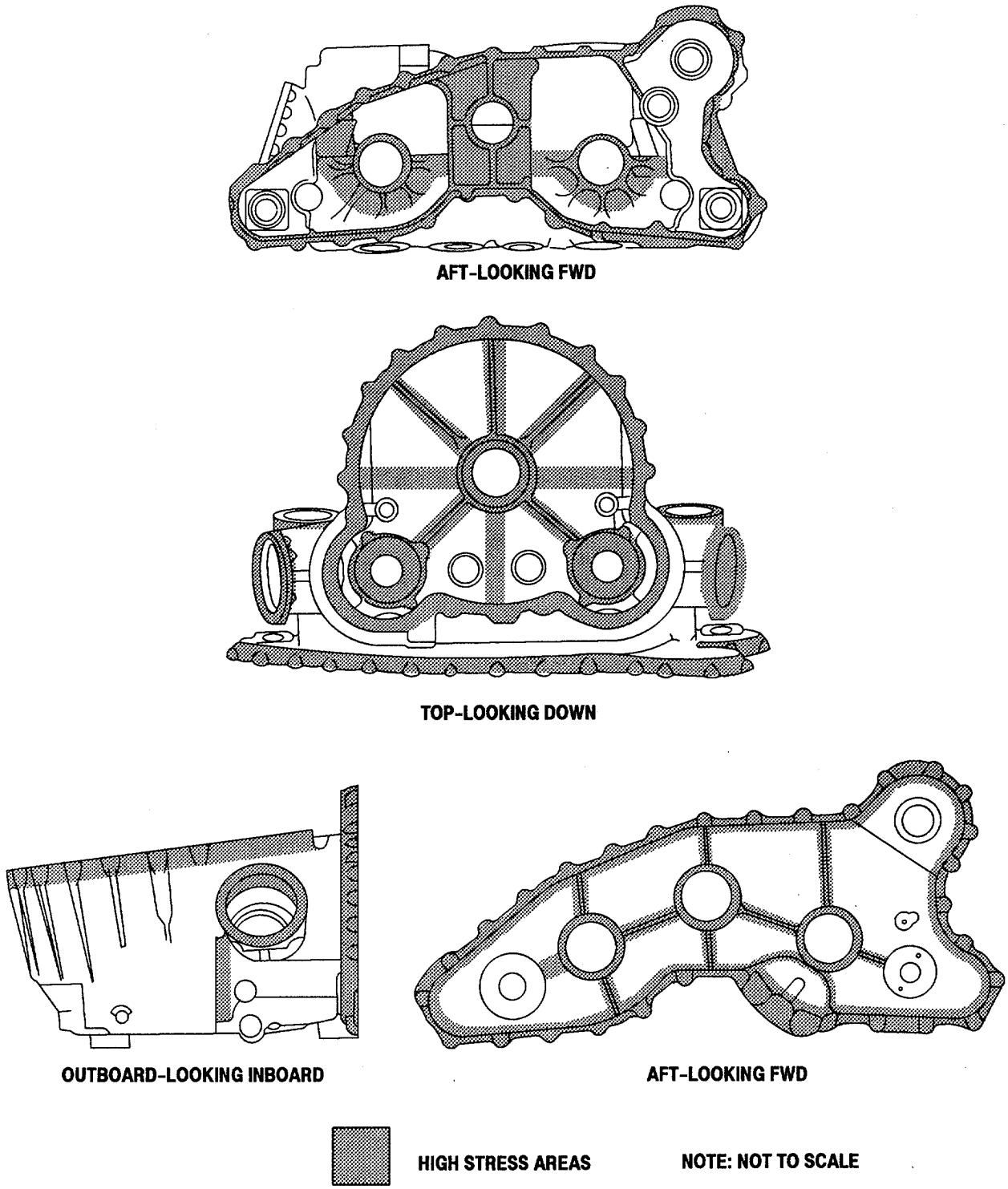

Figure 6-7. Main Transmission Housing High Stress Areas (Sheet 1 of 2)

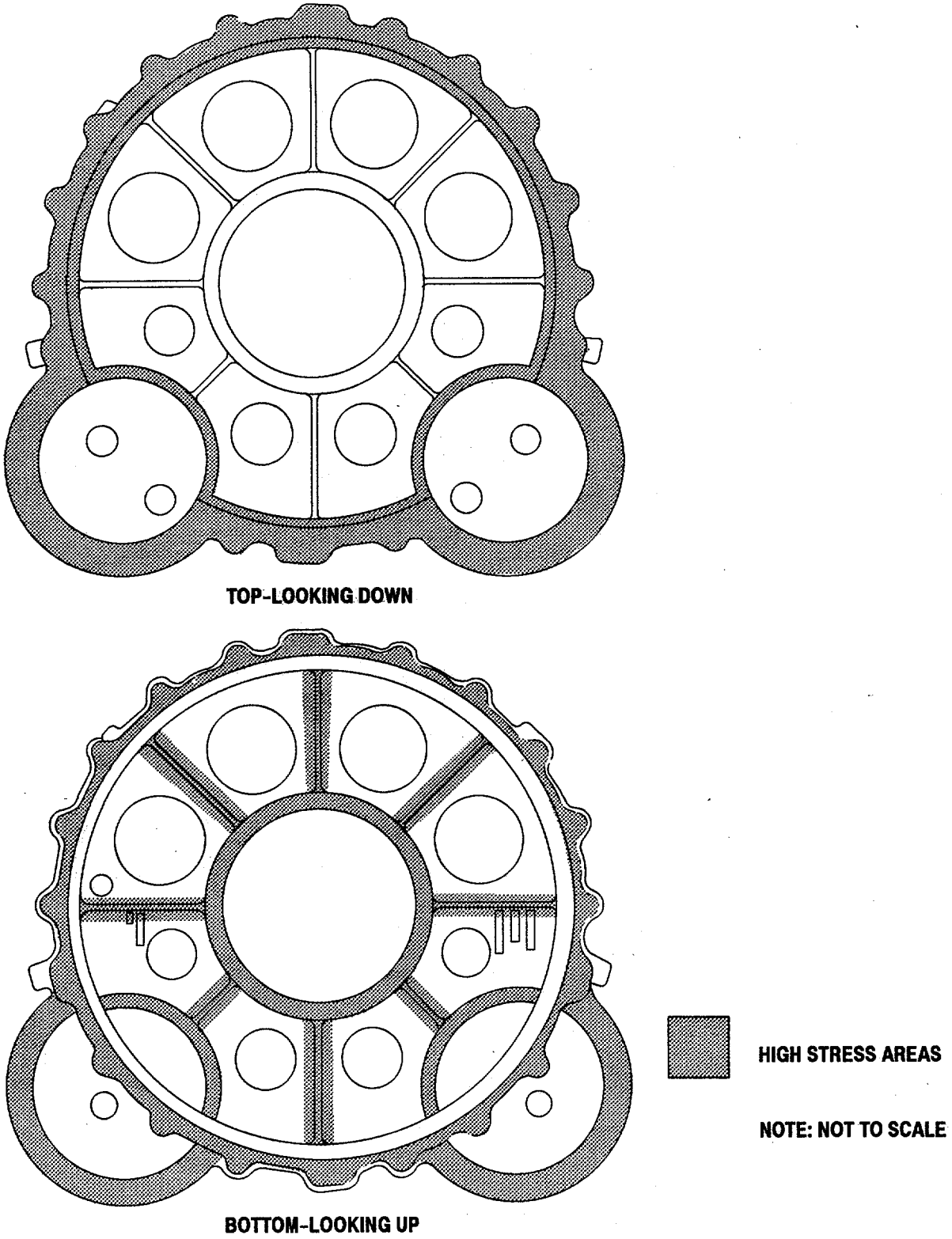

Figure 6-7. Main Transmission Housing High Stress Areas (Sheet 2 of 2)

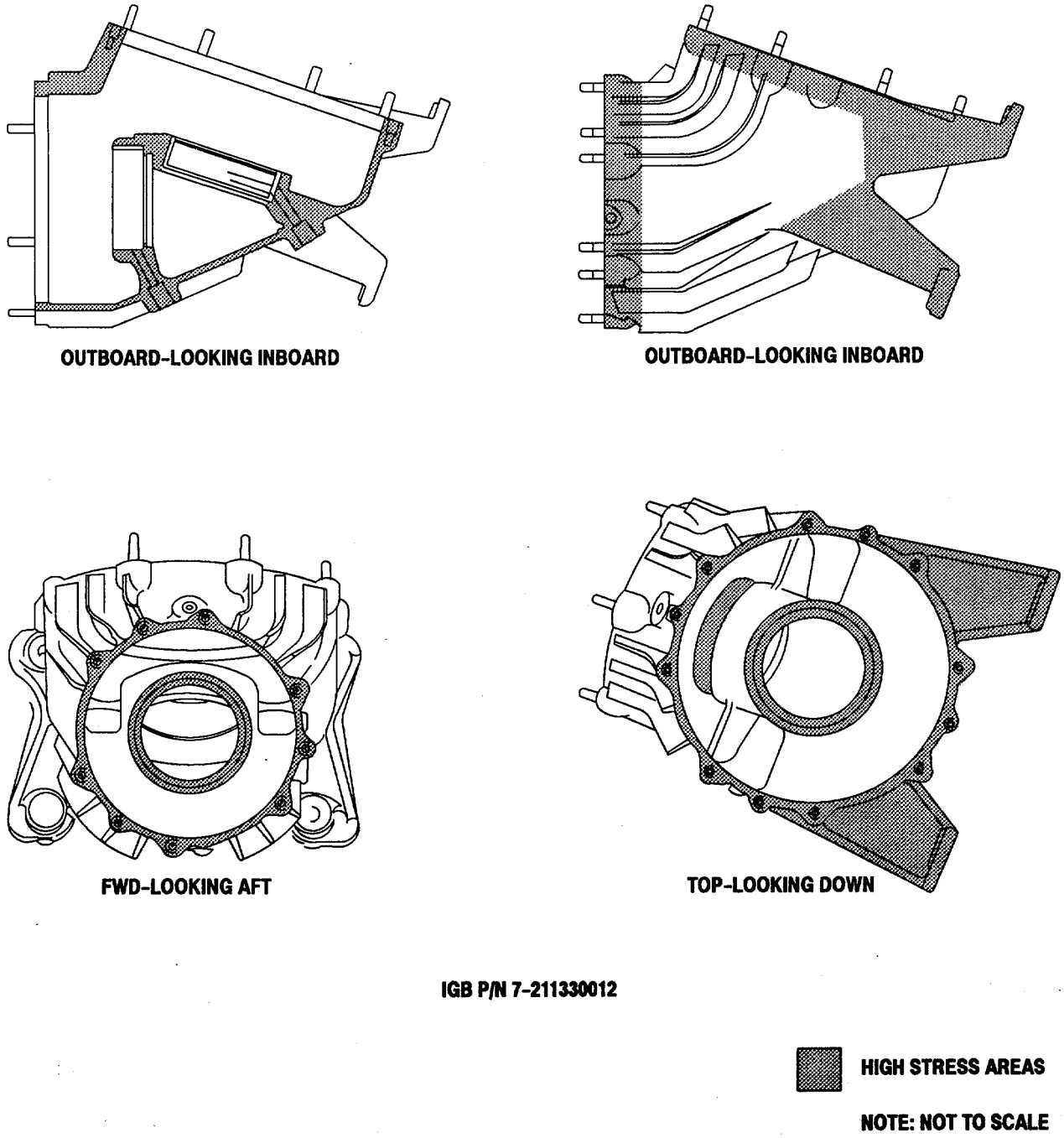

Figure 6-8. Intermediate Gearbox Housing High Stress Areas (Sheet 1 of 2)

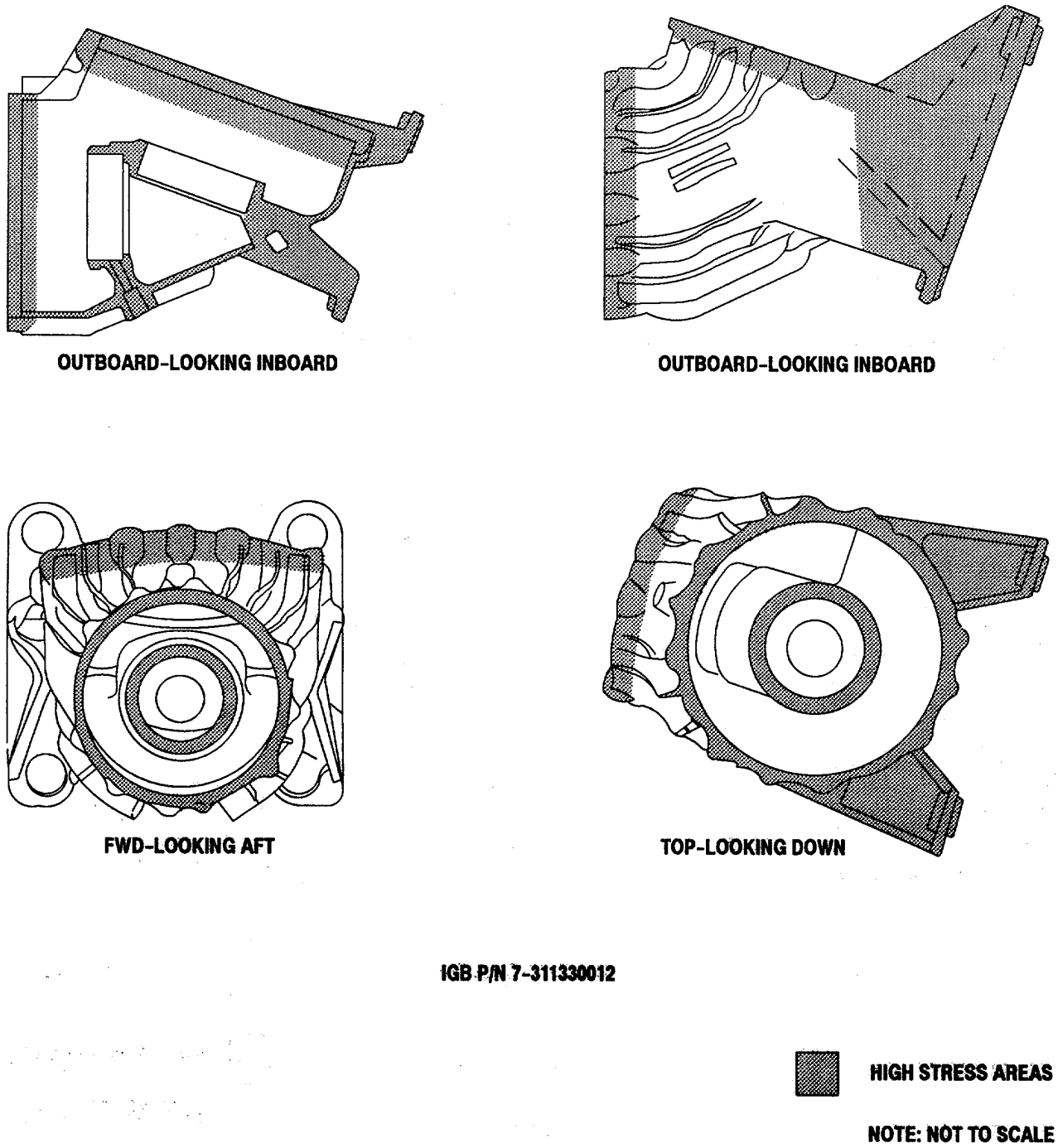

Figure 6-8. Intermediate Gearbox Housing High Stress Areas (Sheet 2 of 2)

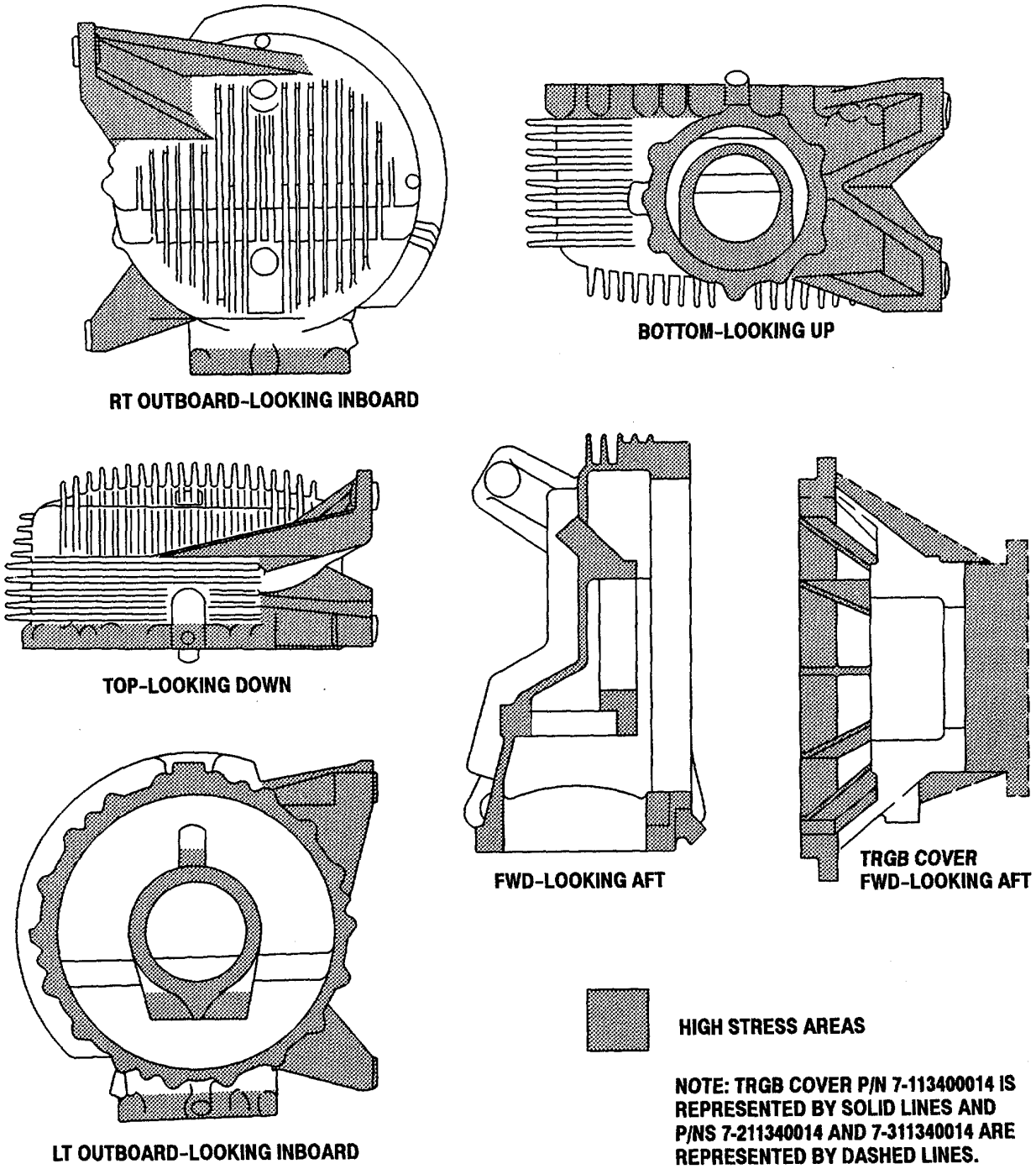

Figure 6-9. Tail Rotor Gearbox Housing and Cover High Stress Areas

CHAPTER 7
HYDRAULIC AND PNEUMATIC SYSTEMS

BDAR TM PROCEDURES. THE EXPEDIENT REPAIR PROCEDURES IN BDAR TM ARE FOR USE IN COMBAT ONLY. STANDARD MAINTENANCE/REPAIR PROCEDURES ARE TO BE USED AS SOON THEREAFTER AS POSSIBLE.

SECTION I. INTRODUCTION

7-1. SCOPE.

This chapter contains description, location, serviceability criteria, and cannibalization criteria for the hydraulic and pneumatic systems. Repair of battle damage to the hydraulic and pneudraulic systems during combat may be deferrable depending on the damage or component function.

7-2. SYSTEM DESCRIPTION AND LOCATION.

The hydraulic and pneumatic systems consist of the utility hydraulic subsystem, primary hydraulic subsystem, pneumatic subsystem, and the Pressurized Air System (PAS). Refer to TM 1-1520-238-T for detailed description and operation of specific hydraulic and pneumatic components.

7-2.1. Utility Hydraulic Subsystem (Figures 7-1 and 7-5). The utility hydraulic subsystem consists of the following: low level shutoff valve, utility hydraulic manifold, tail wheel lock actuator, longitudinal, lateral, collective, and directional servocylinders, utility hydraulic pump, and tail wheel lock control valve. The utility subsystem also provides fluid power to the rotor brake actuator, pylon actuators, ammunition drive motor, AWS drive motor, AWS elevation motor, and APU start motor. The utility subsystem components are interconnected by unions, tubing, hoses, and B-nuts throughout the airframe.

7-2.2. Primary Hydraulic Subsystem (Figures 7-2 and 7-6). The primary hydraulic subsystem consists of the following: longitudinal, lateral, collective, and directional servocylinders, primary hydraulic pump, hand pump, and primary hydraulic manifold. The primary subsystem components are interconnected by unions, tubing, hoses, and B-nuts throughout the air frame.

7-2.3. Pneumatic Subsystem (Figure 7-3). The pneumatic subsystem consists of the following: utility hydraulic accumulator, utility pneumatic accumulator, and utility hydraulic return accumulator. The pneumatic components are located in the aft equipment bay and the left-hand forward avionics bay.

7-2.4. PAS (Figures 7-4 and 7-7). The PAS consists of the following: shaft driven compressor, air particle separator, inlet throttle valve, bleed air shutoff/check valve, air pressure regulating valve, and external air receptacle. The PAS components are located mainly inthe aft equipment bay.

7-3. ASSESSMENT PROCEDURE.

The components of the hydraulic and pneudraulic systems are susceptible to ballistic damage or operationally induced damage. Assess damage to determine if repair or cannibalization is necessary. Types of major damage that may be encountered during assessment are gouges, nicks, holes, bends, distortions, creases, and dents.

7-4. SERVICEABILITY CRITERIA.

Serviceability criteria provides each hydraulic and pneumatic subsystem with general and specific criteria. When a component is damaged and the serviceability criteria for the specific type of damage is not presented, TM 1-1520-238-23 inspection criteria shall be utilized. When any damage is deferred, periodic inspections shall be performed to monitor damage growth. Table 7-1 provides hydraulic and pneudraulic system components expanded combat damage criteria. Table 7-2 provides inspection criteria for the Shaft Driven Compressor (SDC) oil system. Table 7-3 provides expanded combat damage criteria for hydraulic tubes. Table 7-4 provides expanded combat damage criteria for pneumatic tubes.

Table 7-1. Hydraulic and Pneumatic System Components Expanded Combat Damage Criteria

Nomenclature	Part Number	Damage Criteria
Coating and Painting	N/A	Any scratch or removal of surface finish is allowed.
Hydraulic/Pneumatic Tubes	N/A	Nicks, gouges, and scratches are allowed. See Table 7-3 for hydraulic tube expanded combat damage criteria and Table 7-4 for pneumatic tube expanded combat damage criteria. Dents allowed. Maximum 50 percent of tube diameter.
Hydraulic Hoses	N/A	Six broken wire strands in any 0.5 inch of length of metallic braiding is allowed. Any amount of damage to the fabric braiding on hoses is allowed. If damage to fabric braiding was caused by rubbing, then inspect both rubbing surfaces for damage and correct condition as required.
Utility Hydraulic Manifold (Figure 7-1) and Primary Hydraulic Manifold (Figure 7-2)	266600-1009 and 266500-1009	Maximum external leakage: Maximum five drops in three minutes pressurized to 3000 psig not to exceed 25 percent reduction of reservoir fluid. Nicks, gouges, and scratches are allowed. Maximum depth of material removed is 0.030 inch without repair for manifolds. No dents are allowed on reservoir barrel area. Damage to the filter indicators can be ignored for combat if not exceeding leakage criteria.
Utility Hydraulic Pump (Figure 7-1) and Primary Hydraulic Pump (Figure 7-2)	7-311810022-3	Maximum seepage of 15 drops in three minutes is allowed for seal drain. Nicks, gouges, and scratches are allowed on pump housing. Maximum depth of material removed is 0.040 inch.
Utility Hydraulic Accumulator and Utility Pneumatic Accumulator (Figure 7-3)	266010-1003 and 7-311810015	Must be able to hold a pressure of 3050 psig. Nicks, gouges, and scratches are allowed. Maximum depth of material removed is 0.040 inch on metal surfaces and 0.020 inch (no longer than 0.12 inch) on composite surfaces (maximum of two damaged areas). All composite damage should be coated with epoxy paint or adhesive to stop Kevlar unwrap. Maximum external leakage: five drops in five minutes.

Table 7-1. Hydraulic and Pneumatic System Components Expanded Combat Damage Criteria - Cont

Nomenclature	Part Number	Damage Criteria
Collective/Lateral, Longitudinal, and Directional Servocylinder (Figures 7-1 and 7-2)	289300, 308900, and 289400	Nicks, gouges, and scratches are allowed. Maximum depth of material removed is 0.030 inch without repair. No damage allowed on piston rod. Maximum external leakage: Piston rod: 5 drops/25 cycles Split line: 10 drops/25 cycles All other: 3 drops/5 minutes One of four clevis lugs or attachment hardware is allowed to be missing at main rotor servocylinder split lines or directional servocylinder clevis end.
Rotor Brake Actuator (Figure 7-1)	030-16700 (Parker-Hannifin) or 4000380-2 (Goodyear)	Nicks, gouges, and scratches are allowed. Maximum depth of material removed is 0.030 inch without repair. Maximum external leakage: five drops in five minutes. Rotor brake actuator can be removed for combat.
Tail Wheel Lock Control Valve (Figure 7-1)	7-211820306	Nicks, gouges, and scratches are allowed. Maximum depth of material removed is 0.030 inch without repair. Maximum external leakage: five drops in five minutes.
Low Level Shutoff Valve (Figure 7-1)	7-211820030	Nicks, gouges, and scratches are allowed. Maximum depth of material removed is 0.030 inch without repair. Maximum external leakage: five drops in five minutes.
Shaft Driven Compressor (Figure 7-4)	606545-10-1	Surge valve and throttle valve pneumatic lines: Nicks, gouges, and scratches are allowed. Maximum depth of material removed is 0.006 inch. Dents allowed. Maximum 50 percent of tube diameter. Inlet duct: Nicks, gouges, and scratches are allowed. Maximum depth of material removed is 0.010 inch. Dents allowed. Maximum 10 percent of tube diameter. Inlet duct repairable by welding, if removed from SDC. Impeller to be inspected for FOD impact before returning to service.

NOTE

Damage limits are maximum allowed without repair and blending is not required unless specified. However, damage should be blended out whenever possible.

Table 7-2. SDC Oil System Combat Inspection Criteria

Nomenclature	Combat Sample Interval	Sample Evaluation Method	Inspection Criteria	Maintenance Action
SDC	On-Condition: *Low performance *SDC caution light *Oil leakage	Remove oil filter	1. 10 or more metal particles >1/16x3/16 inch 2. Metal particles or splinters <1/16x3/16 inch covering more than 25 percent of filter area 3. 10 or less metal particles >1/16x3/16 inch or covering less than 25 percent of filter area	1. Remove and replace SDC. 2. Remove and replace SDC. 3. Clean or replace SDC filter.

Table 7-3. Hydraulic Tubes Expanded Combat Damage Criteria

Tube Material	Tube Outside Diameter	Tube Wall Thickness	Allowable Damage Depth
Aluminum	0.250 (1/4) inch	0.020 inch	0.006 inch
Aluminum	0.375 (3/8) inch	0.028 inch	0.009 inch
Aluminum	0.500 (1/2) inch	0.028 inch	0.009 inch
Aluminum	0.625 (5/8) inch	0.028 inch	0.009 inch
Aluminum	1.000 (1) inch	0.065 inch	0.021 inch
Cres Steel	0.250 (1/4) inch	0.020 inch	0.006 inch
Cres Steel	0.375 (3/8) inch	0.020 inch	0.006 inch

NOTE

These limits are for damage in straight tube sections only. Damage in the outside radius of any bend shall use the following allowables: Aluminum tubes - 50 percent of the above limits. Cres steel tubes - 30 percent of the above limits.

Table 7-4. Pneumatic Tubes Expanded Combat Damage Criteria

Tube Material	Tube Outside Diameter	Tube Wall Thickness	Allowable Damage Depth	Application Codes
Aluminum	0.250 (1/4) inch	0.028 inch	0.009 inch	1
Aluminum	0.500 (1/2) inch	0.028 inch	0.009 inch	2
Aluminum	0.750 (3/4) inch	0.028 inch	0.009 inch	3
Aluminum	1.000 (1) inch	0.028 inch	0.009 inch	4
Aluminum	1.500 (1-1/2) inch	0.049 inch	0.015 inch	5
Aluminum	2.000 (2) inch	0.049 inch	0.015 inch	5
Aluminum	2.500 (2-1/2) inch	0.035 inch	0.010 inch	6
Aluminum	3.000 (3) inch	0.035 inch	0.010 inch	6
Aluminum	4.000 (4) inch	0.035 inch	0.010 inch	7
Titanium	1.500 (1-1/2) inch	0.020 inch	0.006 inch	8

APPLICATION CODES

1. All 0.250 inch tubing in IPAS system is 0.028 inch wall thickness.
2. IPAS tubing serving the fuel system, except auxiliary fuel tank pressurization.
3. 7-211710038 manifold assembly.
4. Air turbine starter lines located in the deck area.
5. 7-311710015 manifold, 7-311710010 tee assembly, 7-211710070 SDC inlet assembly (aircraft side), ENCU supply tubing.
6. SDC inlet duct (integral with SDC).
7. ENCU exhaust duct.
8. Air turbine starter lines located in the engine nacelles, 7-311710102 ground air connection manifold.

NOTE

These limits are for damage in straight tube sections only. Damage in the outside radius of any bend shall use the following allowables: Aluminum tubes - 50 percent of the above limits. Titanium tubes - 30 percent of the above limits.

7-5. CANNIBALIZATION CRITERIA.

The hydraulic and pneumatic system components that are considered crucial during combat are identified by the hydraulic and pneumatic system cannibalization candidates list (Table 7-5). Whenever possible, these components should be cannibalized from other aircraft that are incapable of returning to base or considered unable to fly. This list is a prediction based on evaluations of the components' susceptibility of damage, deferrability, and repairability. This is not an exhaustive list of all components which may be cannibalized. When needed, any component may be cannibalized and used provided it is acceptable using the serviceability criteria provided.

Table 7-5. Hydraulic and Pneumatic System Cannibalization Candidates

Nomenclature	Part Number
Shaft Driven Compressor (Figure 7-4)	606545-9-1
Utility Hydraulic Manifold (Figure 7-1)	266600-1009
Primary Hydraulic Manifold (Figure 7-2)	266500-1009
Collective/Lateral Servocylinder (Figures 7-1 and 7-2)	289300
Directional Servocylinder (Figures 7-1 and 7-2)	289400
Utility Hydraulic Accumulator (Figure 7-3)	266010-1003
Longitudinal Servocylinder (Figures 7-1 and 7-2)	308900
Utility Hydraulic Pump (Figure 7-1)	7-311810022-3
Primary Hydraulic Pump (Figure 7-2)	7-311810022-3
Hydraulic Hand Pump (Figure 7-2)	266700-1003
Rotor Brake Actuator (Figure 7-1)	030-16700 (Parker-Hannifin) or 4000380-2 (Goodyear)

7-6. REPAIR PROCEDURE INDEX.

Repair Procedure Para

Tubing Repair 7-8

Refer to TM 1-1500-204-23 for all repairs and damage assessment for miscellaneous hardware. Refer to TM 55-1500-323-24 for electrical wiring repairs. Refer to TM 1-1520-238-23 for specific hydraulic and pneumatic system component removal/installation procedures.

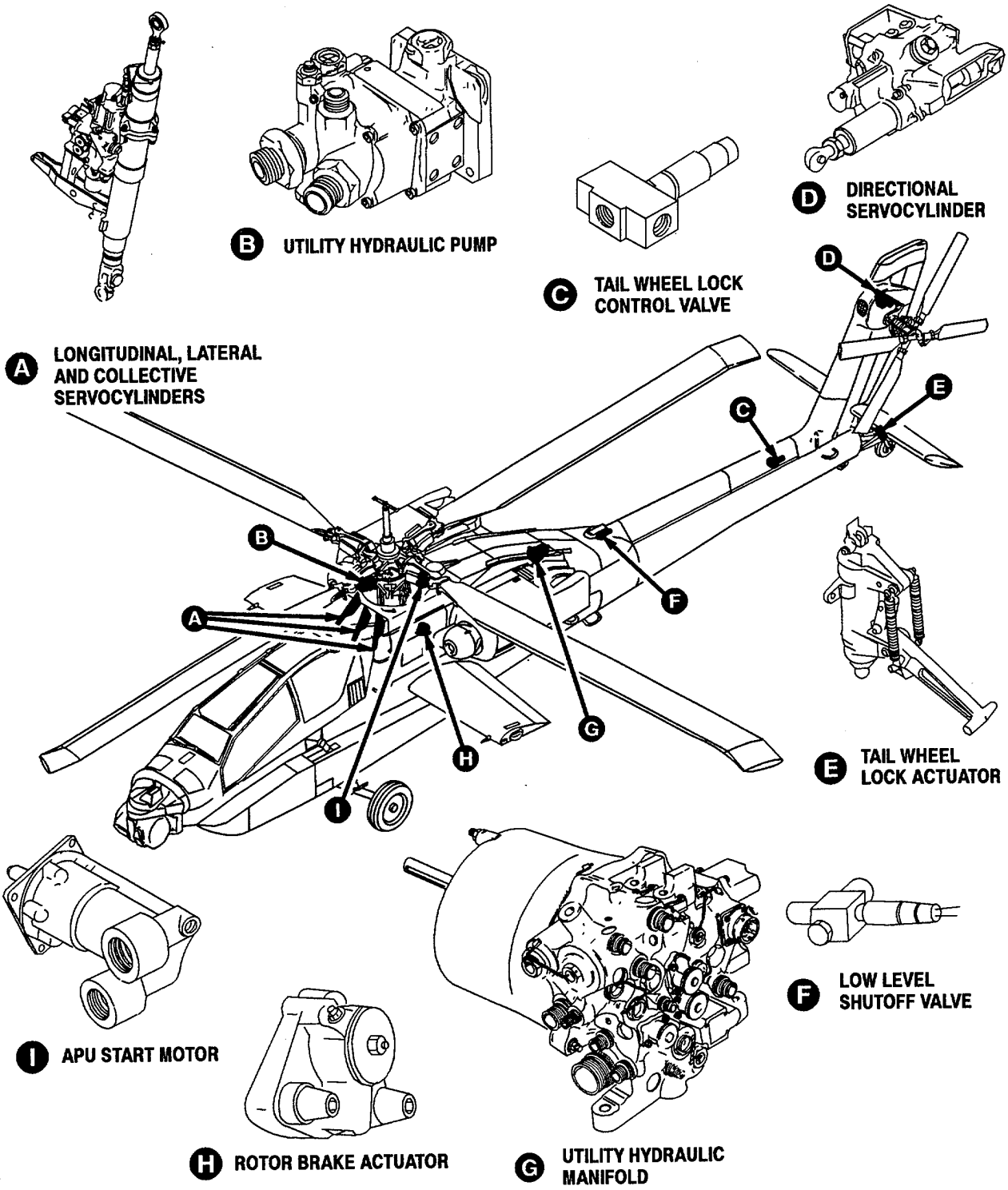

Figure 7-1. Utility Hydraulic Subsystem Component Location

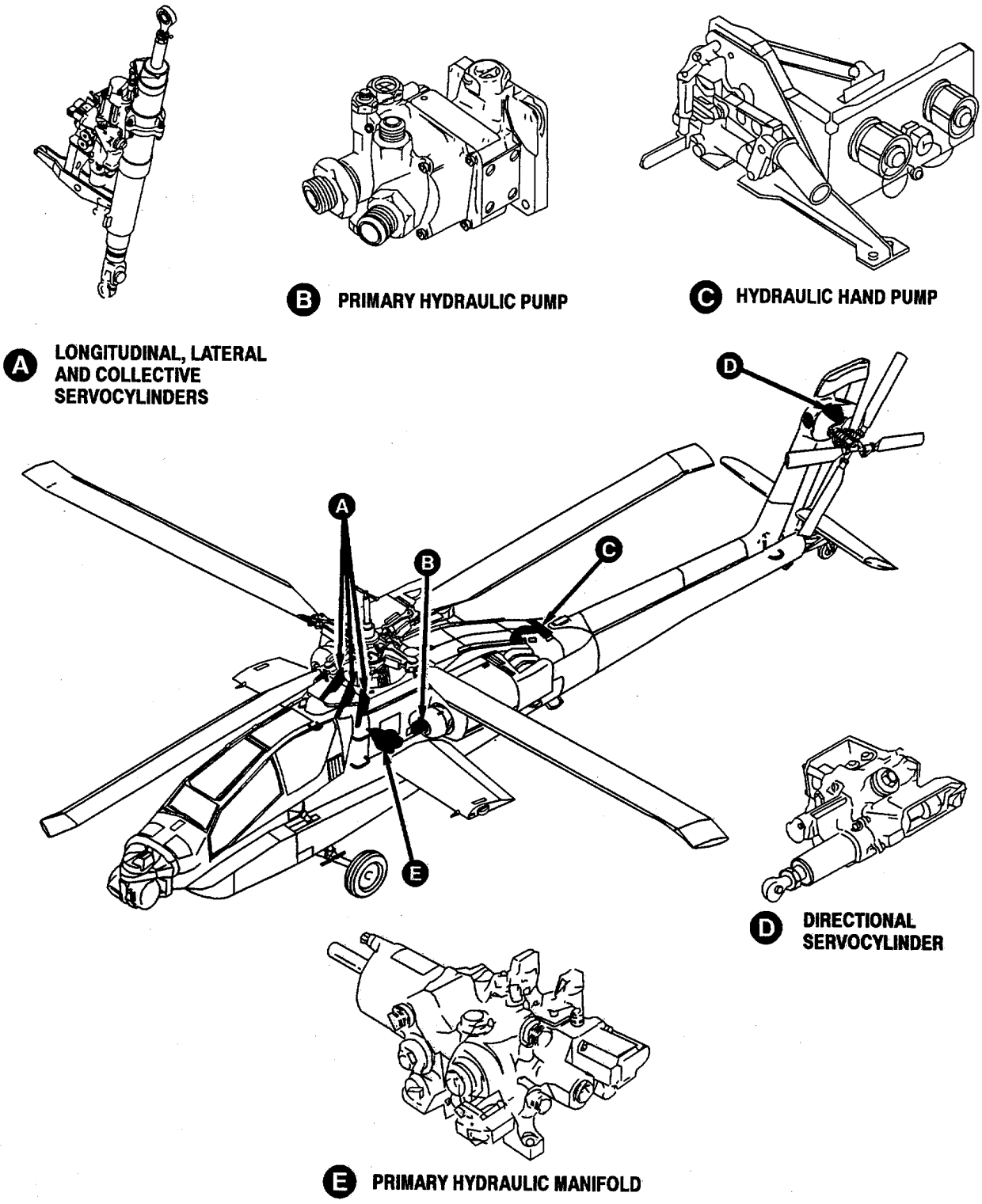

Figure 7-2. Primary Hydraulic Subsystem Component Location

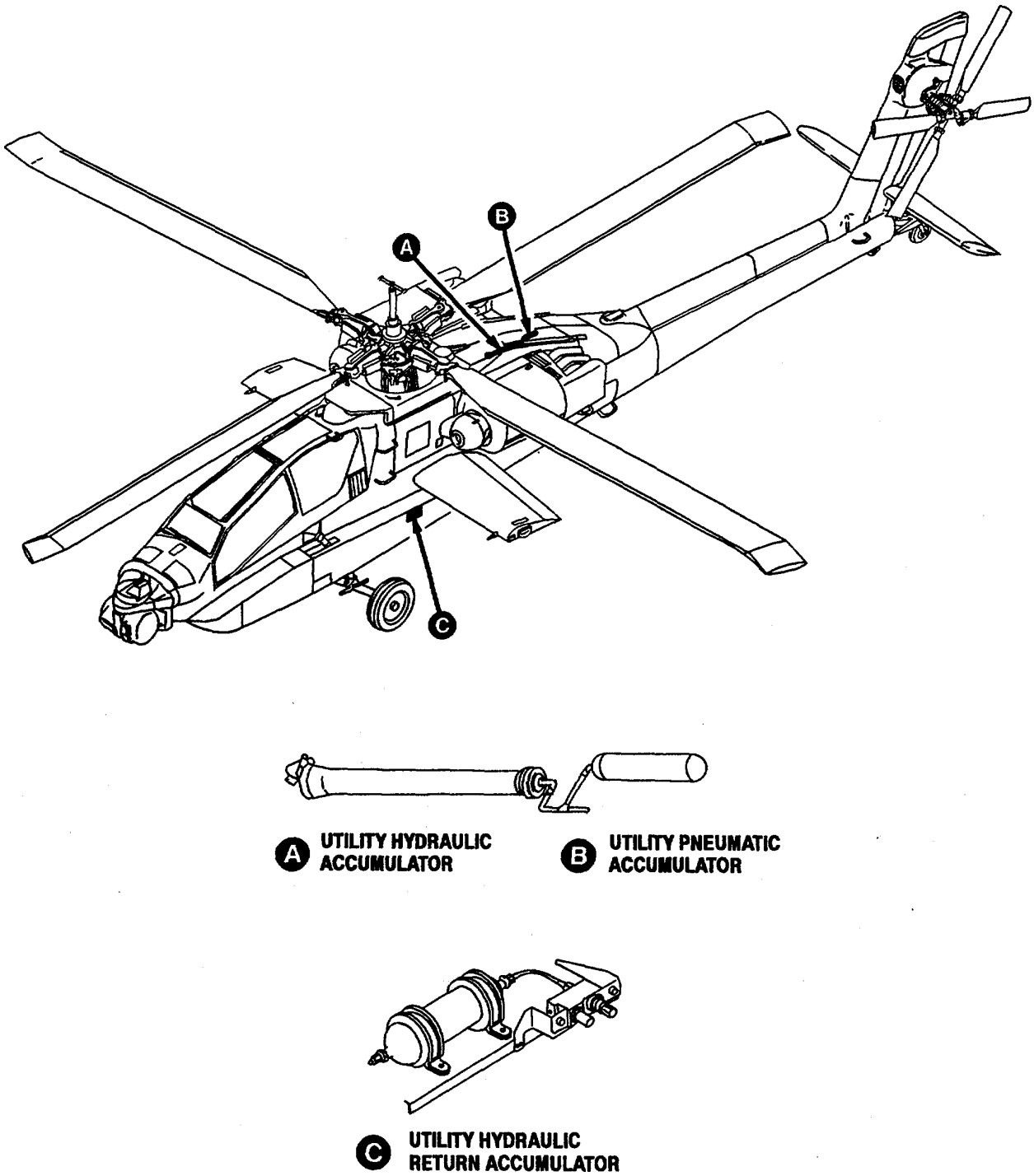

M102-108

Figure 7-3. Pneumatic Subsystem Component Location

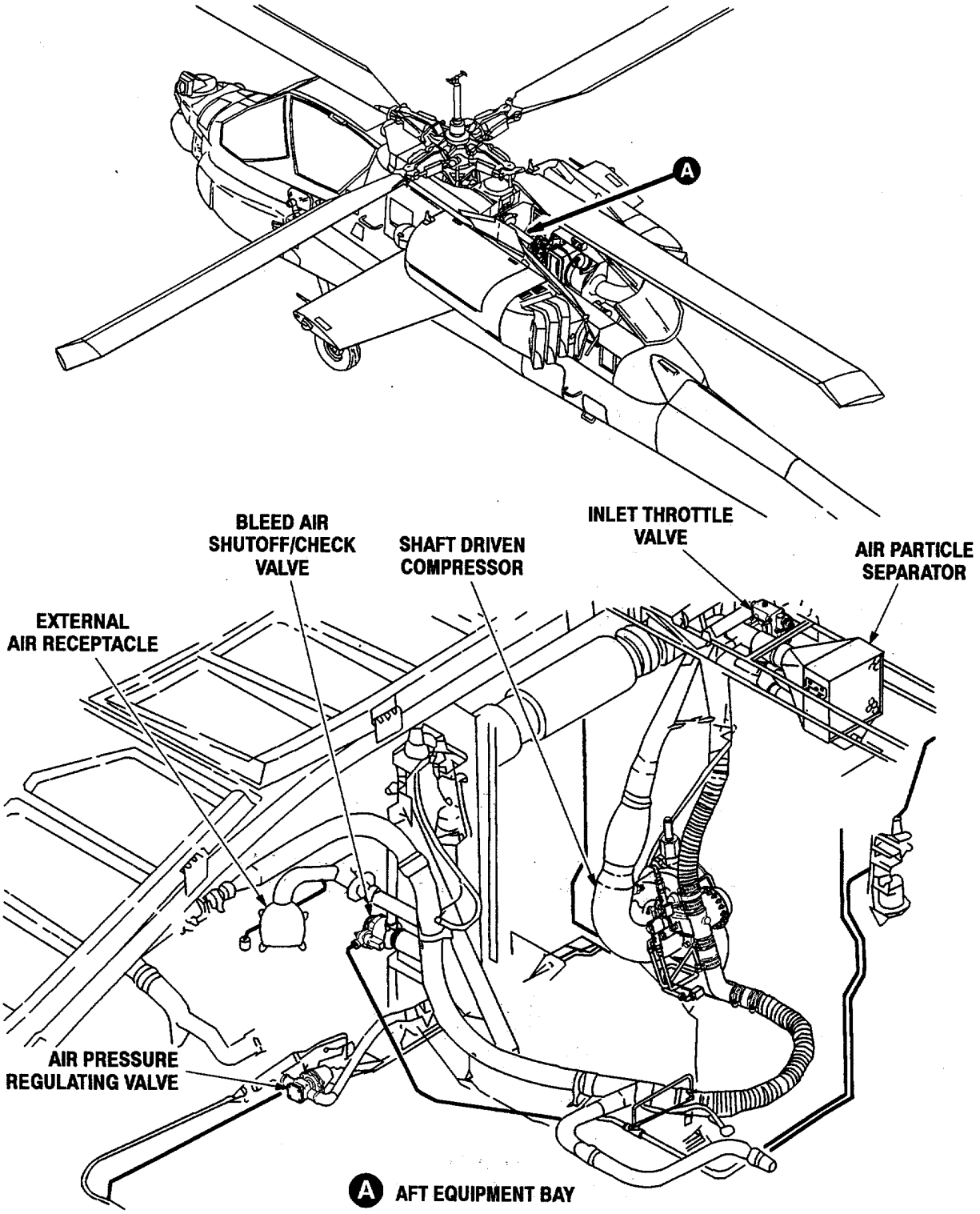

M102-164

Figure 7-4. Pressurized Air System Component Location

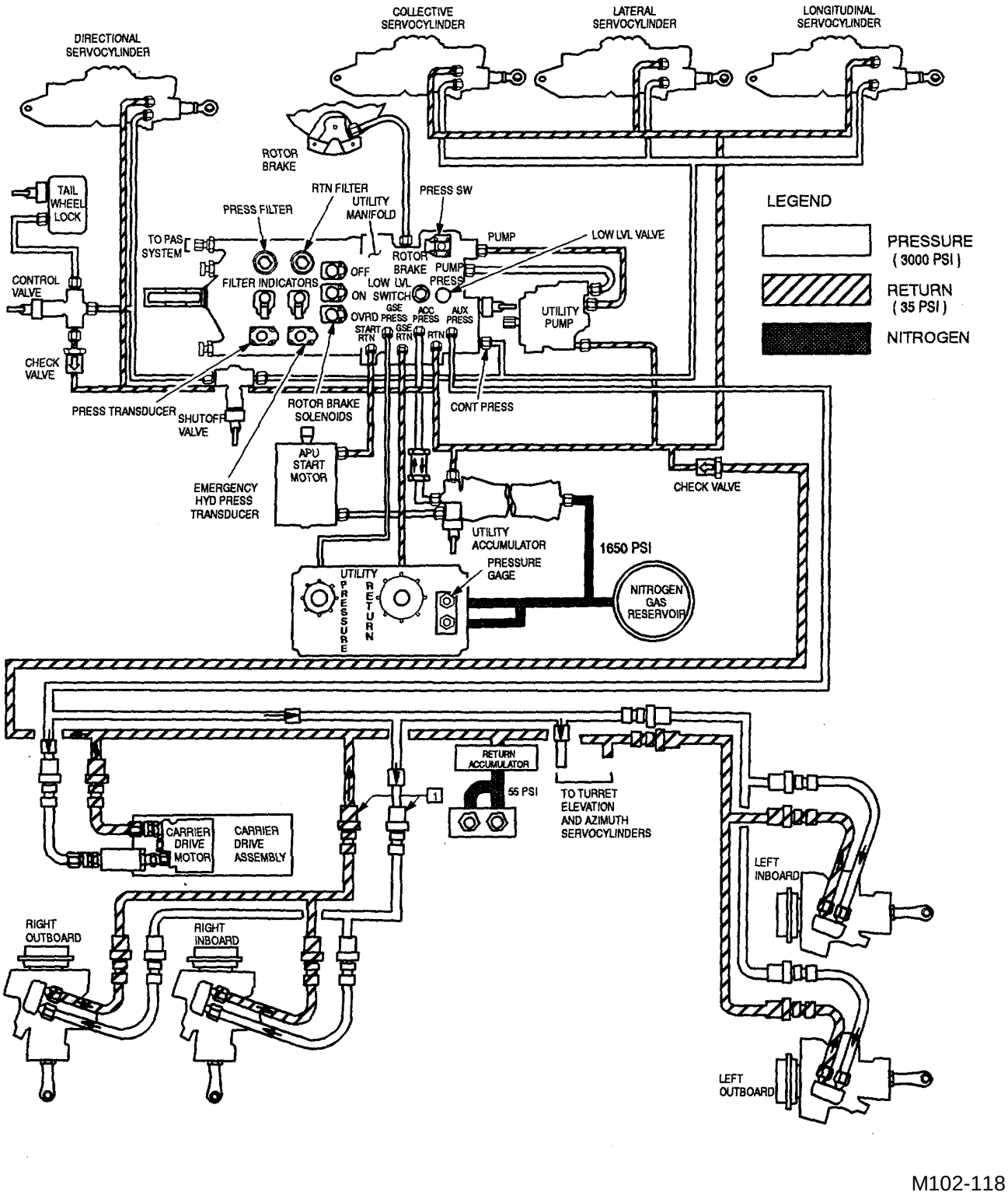

Figure 7-5. Utility Hydraulic Subsystem Functional Diagram

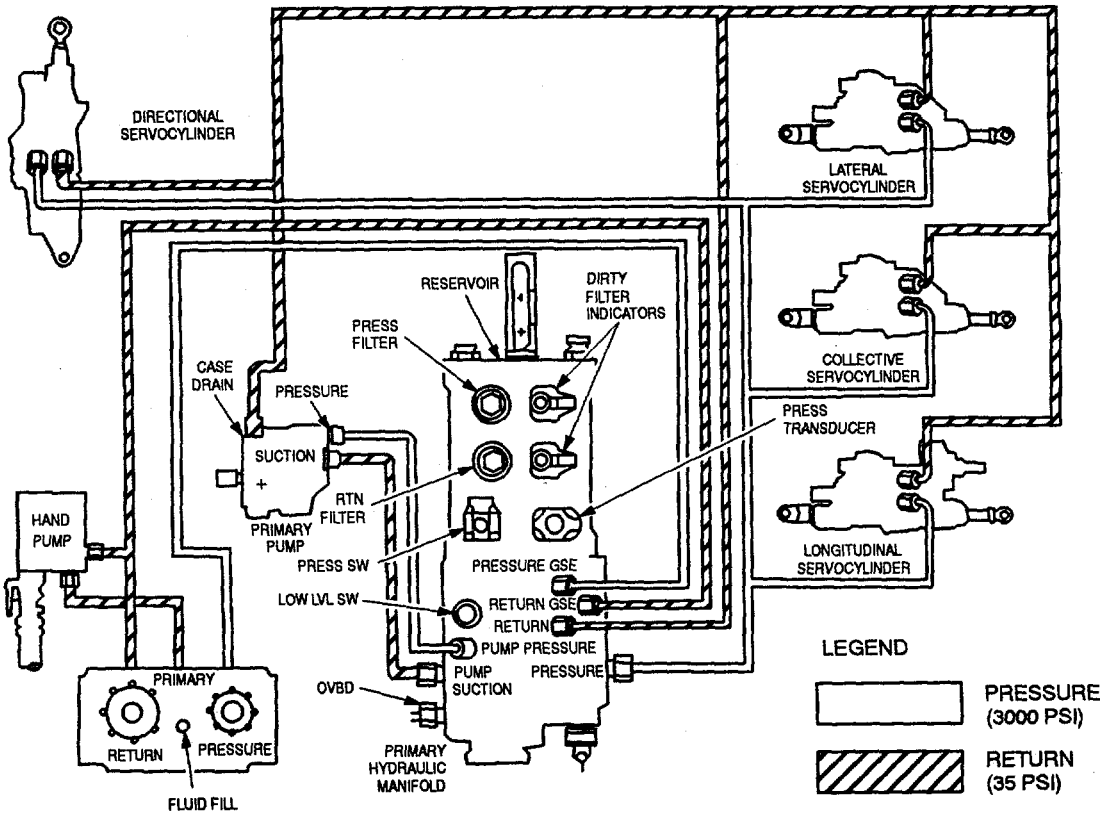

M102-165-1

Figure 7-6. Primary Hydraulic Subsystem Functional Diagram

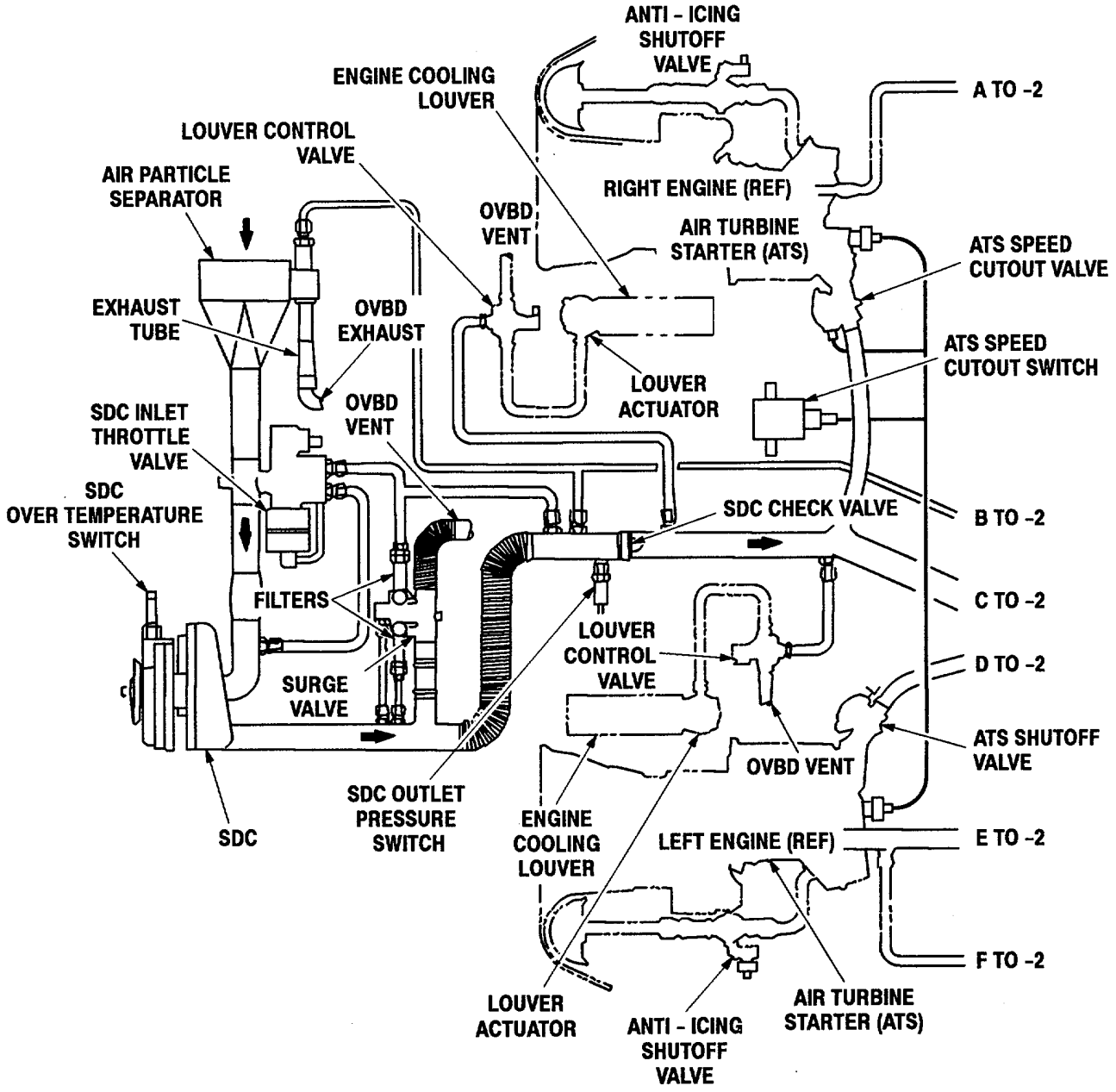

M102-165-1

Figure 7-7. Pressurized Air System Functional Diagram (Sheet 1 of 2)

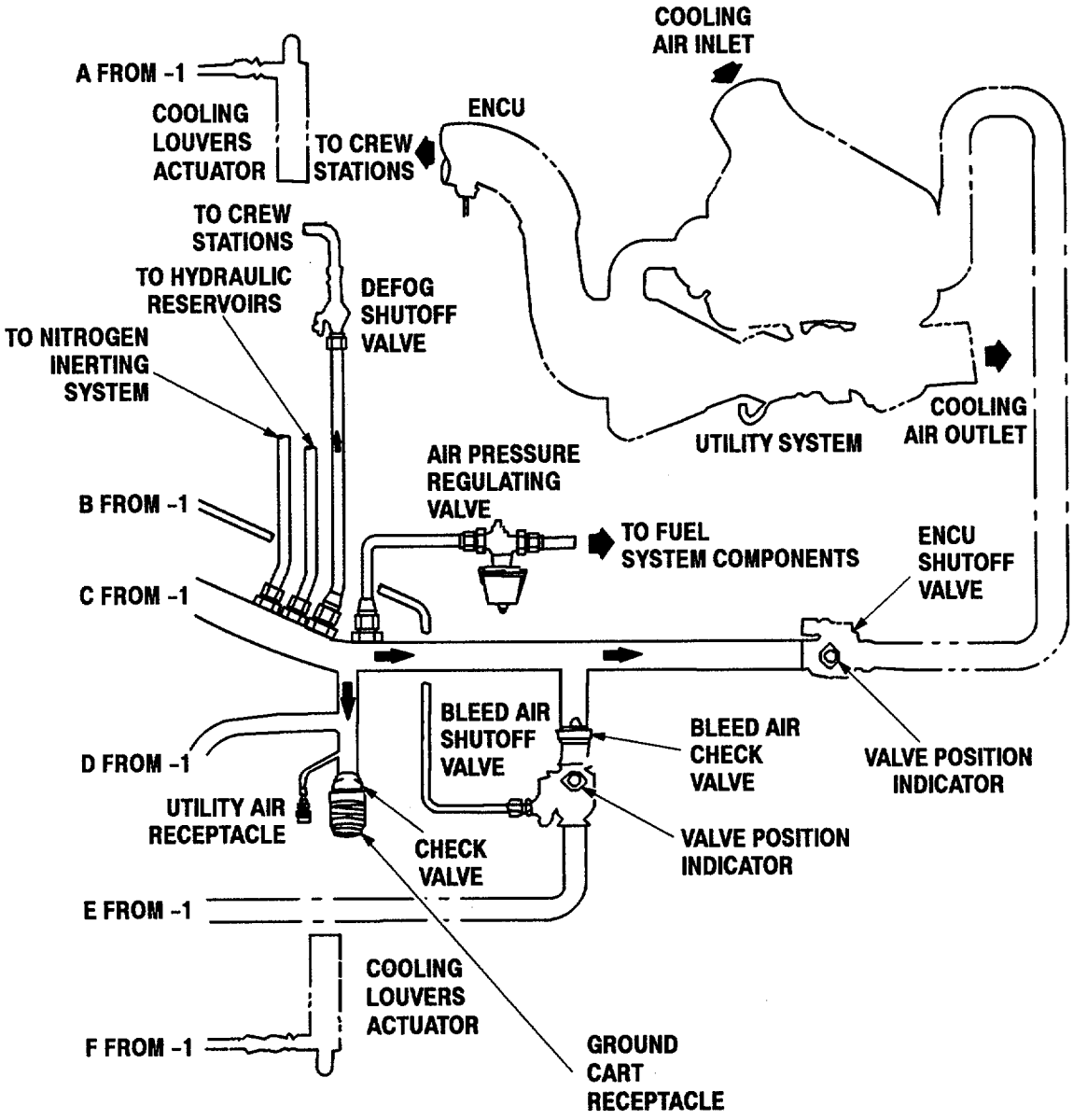

M102-165-2

Figure 7-7. Pressurized Air System Functional Diagram (Sheet 2 of 2)

Section II. HYDRAULIC TUBING

7-7. GENERAL.

Of all battle damage incurred by aircraft pneudraulic systems, the most probable will be tubing and hose damage. BDR to hose and tubing installation can be accomplished in many different ways. When repairs must be made, the most important considerations are system pressures, tools, and repair materials. Most aircraft have a combination of both tubing and hose installations of both AN (flared), MS (flareless), and permaswage manufacture. Replacement with original equipment is desirable but not essential, use of available alternate material is acceptable as long as down time will not be increased.

7-8. TUBING REPAIR.

Minor dents and scratches in tubing may be repaired. A dent less than 20 percent of the tube diameter is acceptable unless it is in the heel of the bend. Scratches or nicks no deeper than 20 percent of the tubing wall thickness that are not in the heel of a bend, may be repaired by burnishing with hand tools. Repair lines with severe die marks, seams, or splits. Cracks or deformities in the flare are unacceptable and cause for rejection. Severely damaged line should be replaced. When replacement is not possible, line may be repaired by cutting out the damaged section and inserting a repair section. Use fluid line repair kit when applicable.

7-8.1. Option 1: Swage Fitting Repair.

7-8.1.1. General Information: Swage fitting repair (Permaswage or Rynglok) is a permanent repair. Refer to TM 1-1520-238-23 for repair procedures.

7-8.2. Option 2: B-Nut Fitting Repair.

7-8.2.1. General Information: This repair involves either AN or MS type fittings.

7-8.2.2. Limitations: None.

7-8.2.3. Personnel/Time Required:
- 1 person
- 2 hours

7-8.2.4. Materials/Tools Required:
- Nipple (item 20, App C) or nipple (item 21, App C)
- Tube coupling nut (item 22, App C) and sleeve (item 54, App C), nut (item 23, App C) and sleeve (item 55, App C), nut (item 24, App C) and sleeve (item 56, App C), or nut (item 25, App C) and sleeve (item 57, App C)
- Tube (item 62, App C) or tube (item 63, App C)
- Tube cutter (item 14, App B)
- Tube flaring tool (item 17, App B)
- Fluid line repair kit (item 26, App B)
- Hydraulic tool kit (item 42, App B)

7-8.2.5. Procedural Steps: (Figures 7-8 and 7-9).

1. Cut and remove damaged section of tubing.

2. Square, clean, and deburr rough edges of undamaged tubing.

3. If damaged section of tubing does not exceed length of union, a new section is not needed.

4. If flared AN fittings are to be used, install nuts and sleeves on prepared original tubing facing toward the end of tubing, then flare ends of tubing. If MS fittings are to be used, install nuts and sleeves on tubing.

5. Install appropriate unions on fittings and torque.

6. Measure distance between two installed unions.

7. Prepare a replacement section using same method as for original line. Install the replacement section, torque properly, and check for pressure.

8. Clamp tubing as required.

9. Record BDR action taken. When mission is complete, as soon as practical, repair equipment/system using standard maintenance procedures.

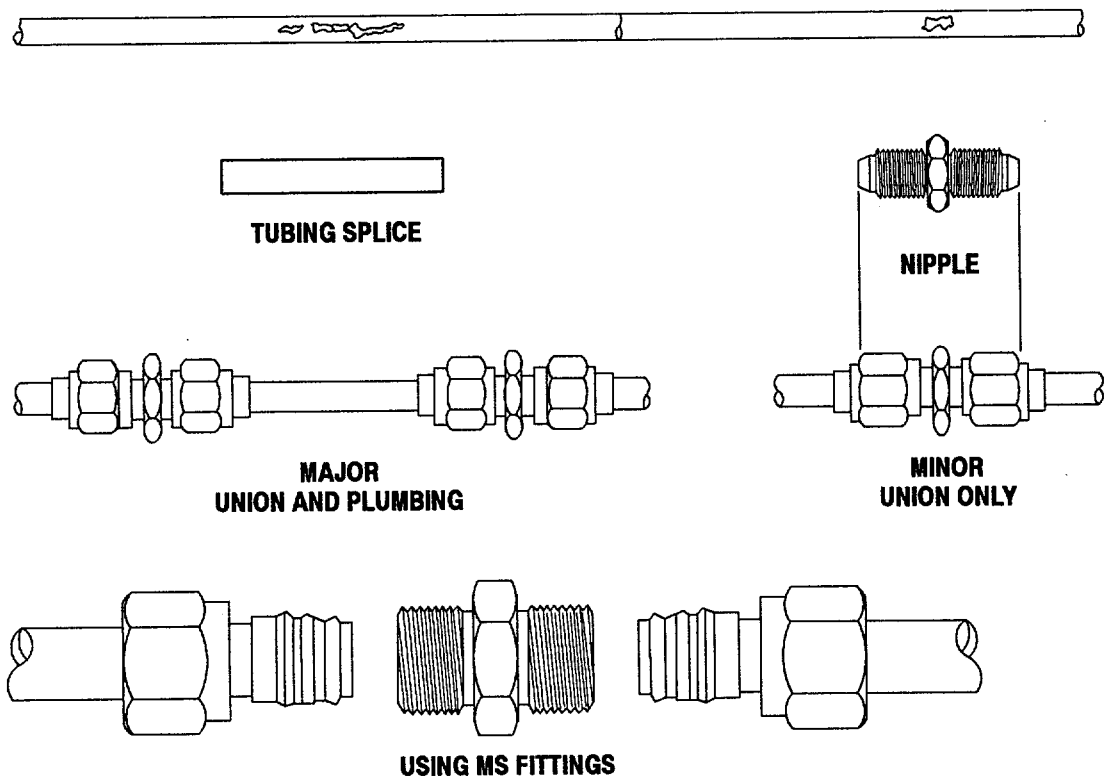

M102-115

Figure 7-8. Tubing Repair (MS Fittings)

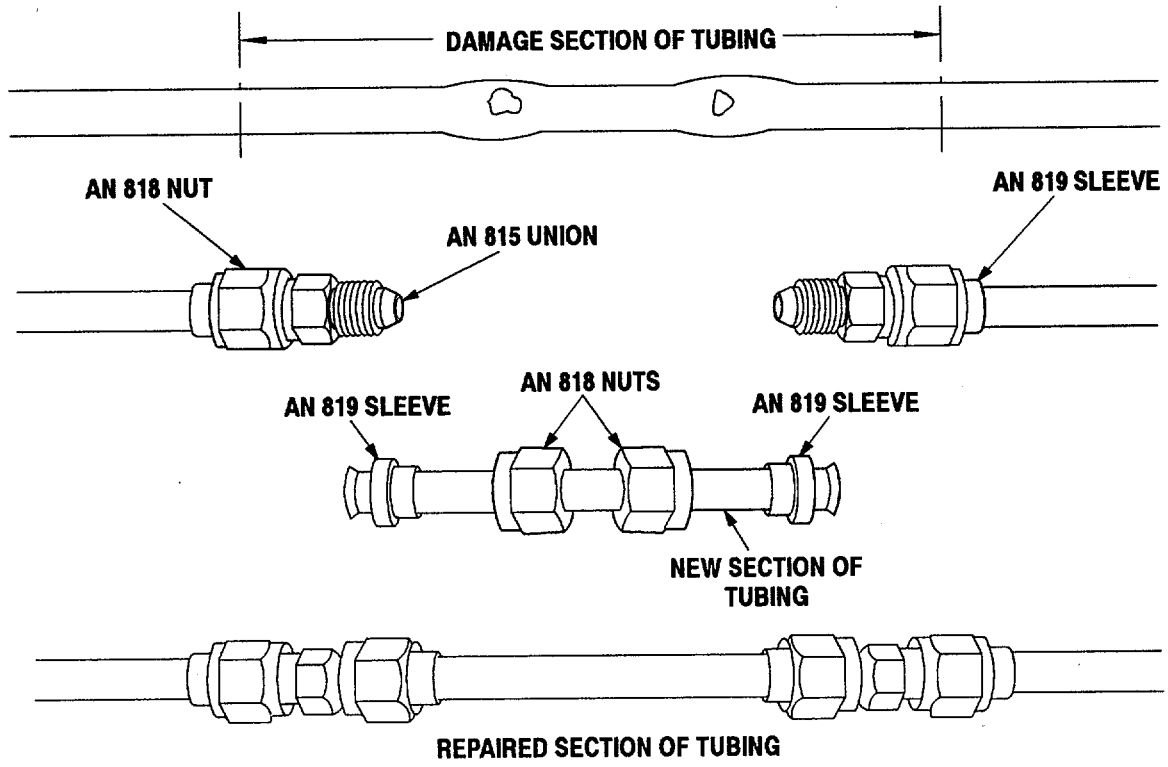

M102-116

Figure 7-9. Tubing Repair (AN Fittings)

7-8.3. Option 3: Hose Replacement Repair.

7-8.3.1. Limitations: None.

7-8.3.2. Personnel/Time Required:

- 2 persons
- 1 hour

7-8.3.3. Materials/Tools Required:

- Tube cutter (item 14, App B)
- Fluid line repair kit (item 26, App B)

7-8.3.4. Procedural Steps: (Figures 7-10 through 7-12).

1. Cut and remove damaged section of tubing (Figure 7-10).

2. Square, clean, and deburr rough edges of undamaged tubing.

3. Install MS nut, sleeve, and union over each end of undamaged tubing (Figure 7-11).

4. Measure distance between two installed unions.

5. Install appropriate length hydraulic hose assembly between unions from fluid line repair kit (Figure 7-12).

6. Torque hose assembly and check for pressure.

7. Clamp hose as required.

8. Record BDR action taken. When mission is complete, as soon as practical, repair equipment/system using standard maintenance procedures.

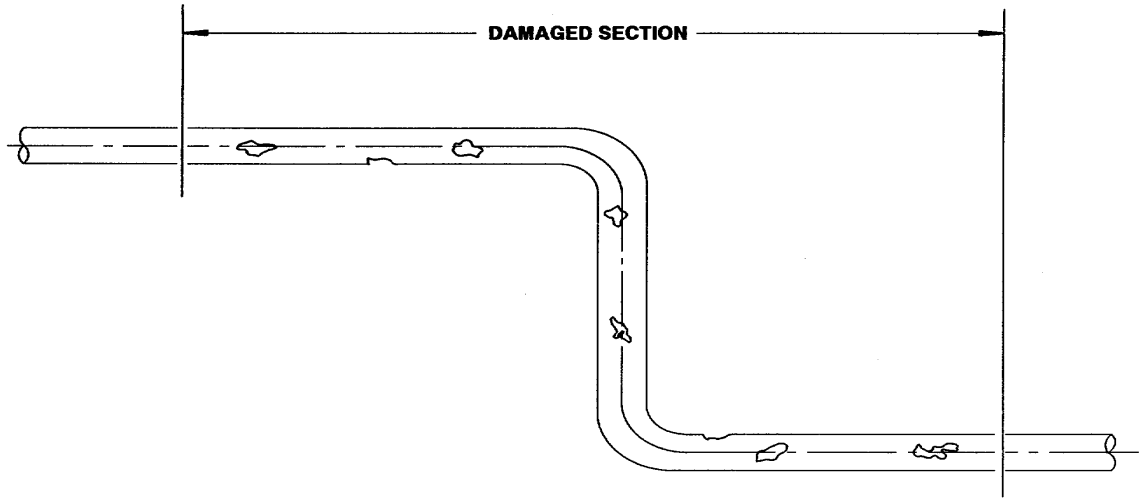

Figure 7-10. Damaged tube Section

M102-124

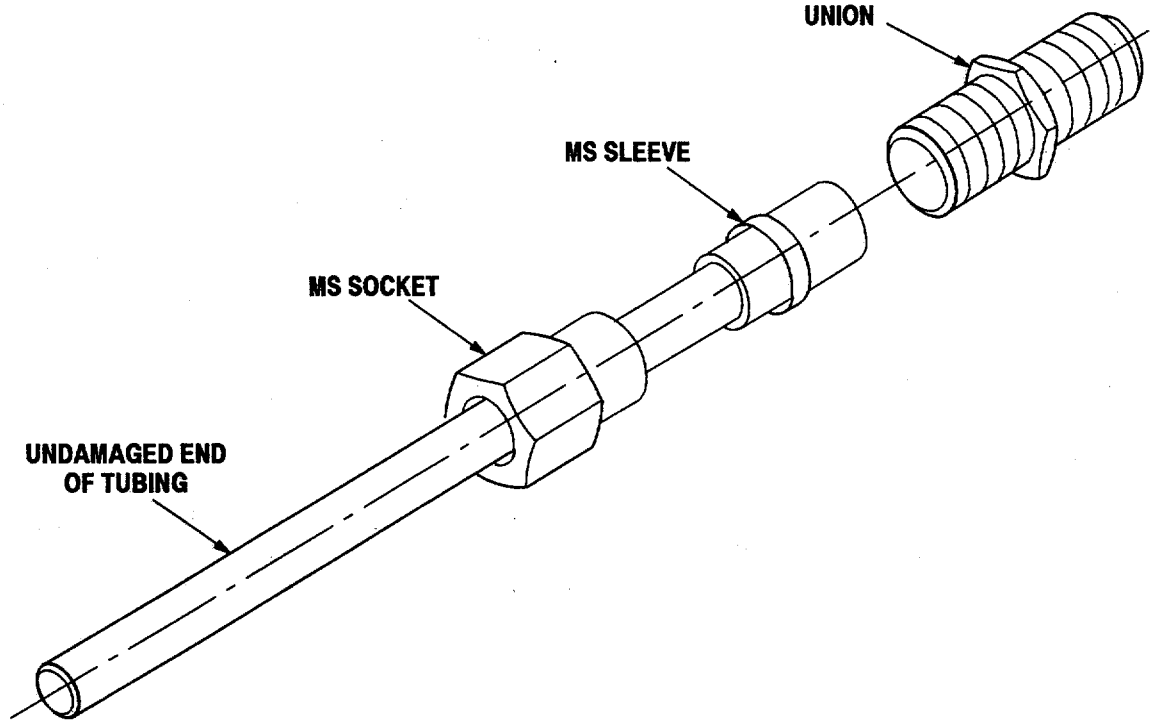

M102-127

Figure 7-11. MS Fittings on Undamaged Tube Ends

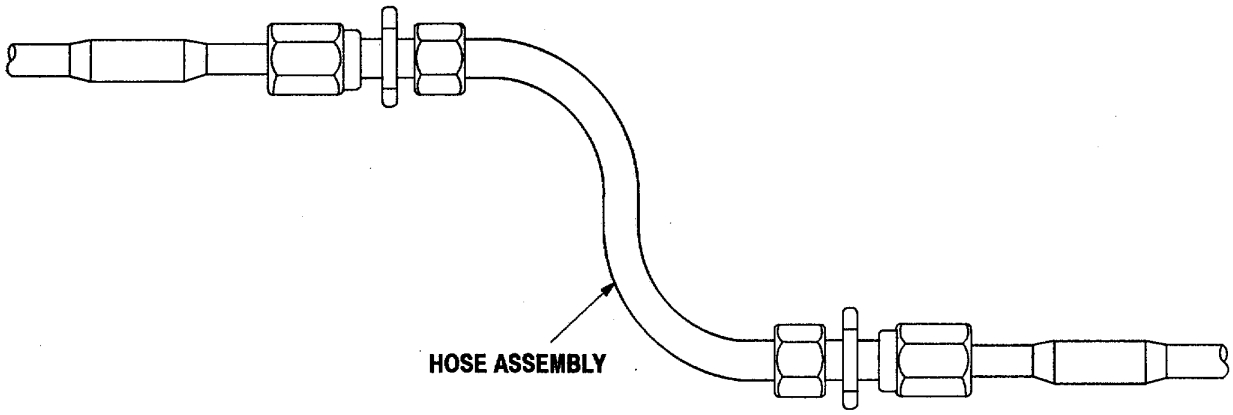

M102-130

Figure 7-12. Hose Assembly Replacement

CHAPTER 8

INSTRUMENTS

BDAR TM PROCEDURES. THE EXPEDIENT REPAIR PROCEDURES IN BDAR TM ARE FOR USE IN COMBAT ONLY. STANDARD MAINTENANCE/REPAIR PROCEDURES ARE TO BE USED AS SOON THEREAFTER AS POSSIBLE.

8-1. SCOPE.

This chapter contains description, location, serviceability criteria, and cannibalization criteria for the instruments system. Repair of battle damage to the instruments system during combat may be deferrable depending on the damage or component function.

8-2. SYSTEM DESCRIPTION AND LOCATION.

The instruments system consists of the engine, flight, navigation, and miscellaneous instrumentation (Figures 8-1 thru 8-4). The instruments are located in the pilot and CPG cockpits. Refer to TM 1-1520-238-T and TM 11-1520-238-23-1 for detailed description and operation of specific instruments components.

8-3. ASSESSMENT PROCEDURE.

The components of the instruments system are susceptible to ballistic damage or operationally induced damage. Assess damage to determine if repair or cannibalization is necessary. Types of major damage that may be encountered during assessment are gouges, nicks, holes, bends, distortions, creases, and dents.

8-4. SERVICEABILITY CRITERIA.

Refer to TM 1-1520-238-23 for the serviceability criteria for the instruments system. When a non-structural component is damaged, most instances will result in deferred repair. When any damage is deferred, periodic inspections shall be performed to monitor damage growth.

8-5. CANNIBALIZATION CRITERIA

The instruments system components that are considered crucial during combat are identified by the instruments system cannibalization candidates list (Table 8-1). Whenever possible, these components should be cannibalized from other aircraft that are incapable of returning to base or considered unable to fly. This list is a prediction based on evaluations of the components susceptibility of damage, deferrability, and repairability. This is not an exhaustive list of all components which may be cannibalized. When needed, any component may be cannibalized and used provided it is acceptable using the serviceability criteria provided.

Table 8-1. Instruments System Cannibalization Candidates

Nomenclature	Part Number
Horizontal Situation Indicator (HSI) (Figure 8-3)	ID-2278A/A
Radio Magnetic Indicator (RMI) (Figure 8-3)	127680
Turbine Gas Temperature (TGT) Indicator (Figure 8-1, sheet 1)	100-476842-001
Engine Torque Indicator (Figure 8-1, sheets 1 and 2)	100-476843-001
Engine Rotor RPM Indicator (Figure 8-1, sheets 1 and 2)	100-476848-001
Engine Fuel Quantity Indicator (Figure 8-4)	100-476845-001

Table 8-1. Instruments System Cannibalization Candidates - Cont

Nomenclature	Part Number
Gas Generator (NG) RPM Indicator (Figure 8-1, sheet 1)	100-476844-001
Remote Attitude Indicator (RAI) (Figure 8-2, sheet 2)	7-214200028
Signal Data Converter Unit (Figure 8-4)	100-476849-003

8-6. REPAIR PROCEDURE INDEX.

Refer to TM 55-1500-323-24 for electrical wiring repairs. Refer to TM 1-1520-238-23 and TM 11-1520-238-23-1 for specific instruments system component removal/installation procedures.

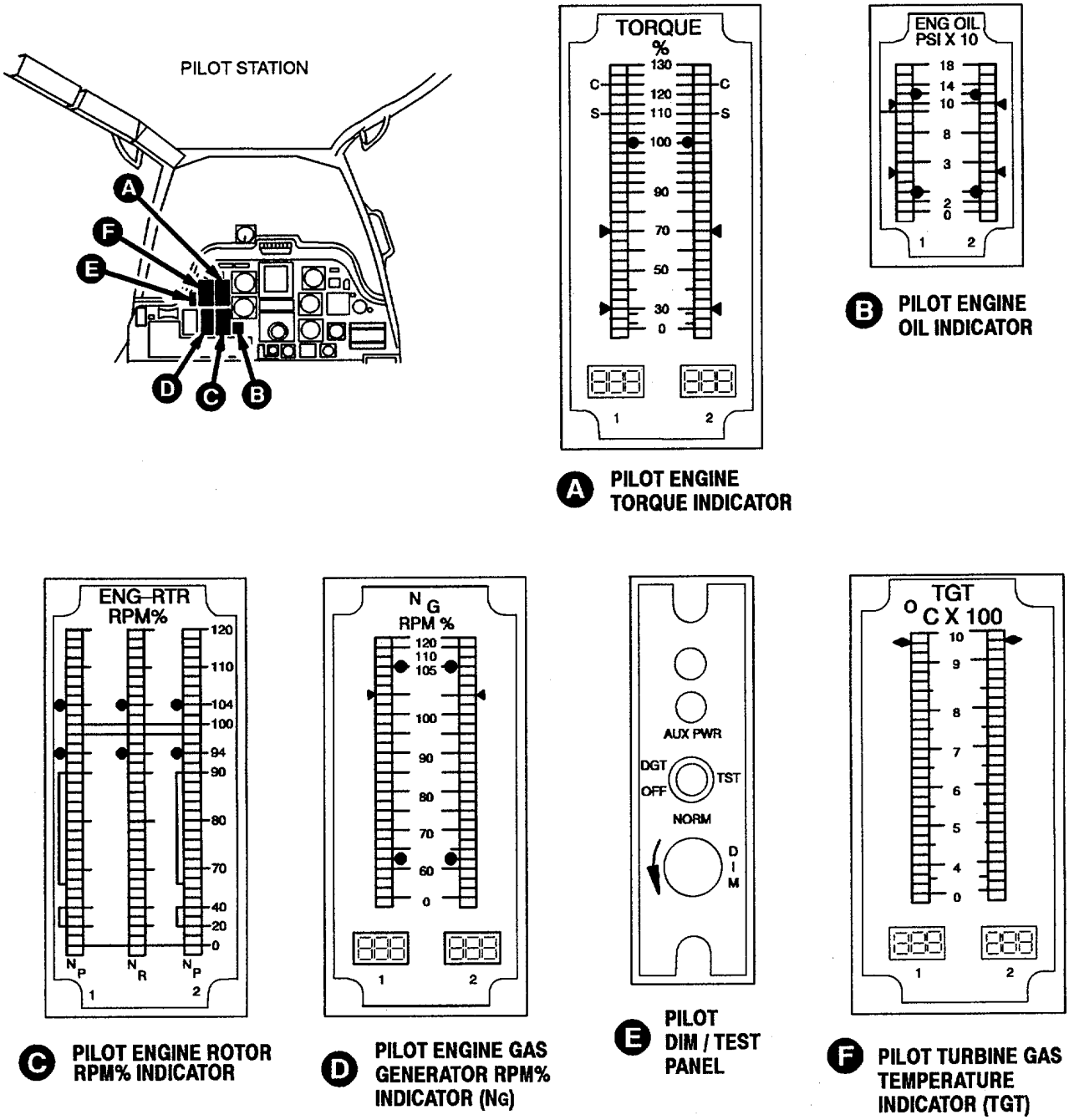

Figure 8-1. Engine Flight Instruments Component Location (Sheet 1 of 2)

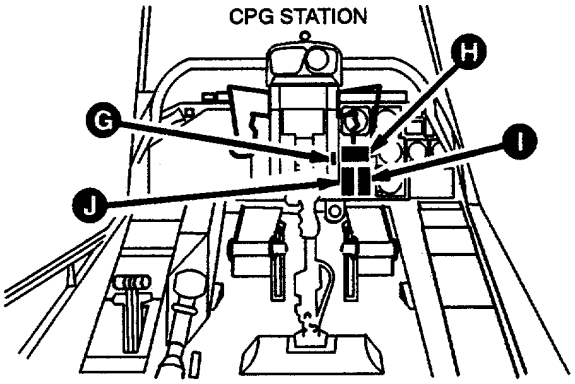

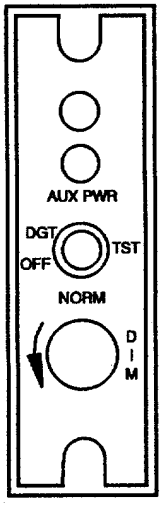

G CPG DIM / TEST PANEL

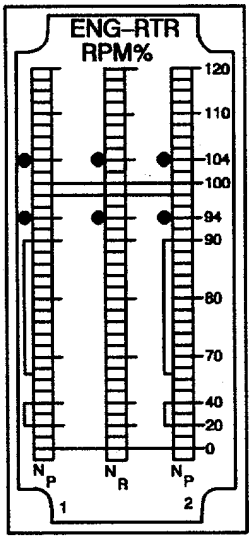

I CPG ENGINE ROTOR RPM% INDICATOR

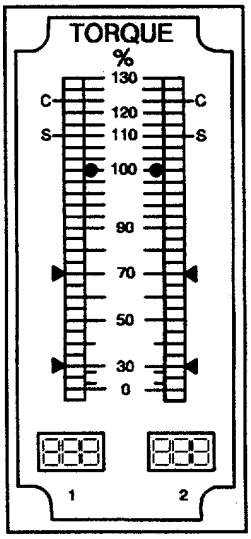

J CPG ENGINE TORQUE INDICATOR

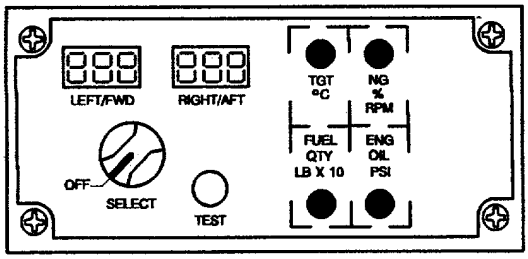

H CPG SELECTABLE DIGITAL DISPLAY PANEL (SDD)

M102-090-2

Figure 8-1. Engine Flight Instruments Component Location (Sheet 2 of 2)

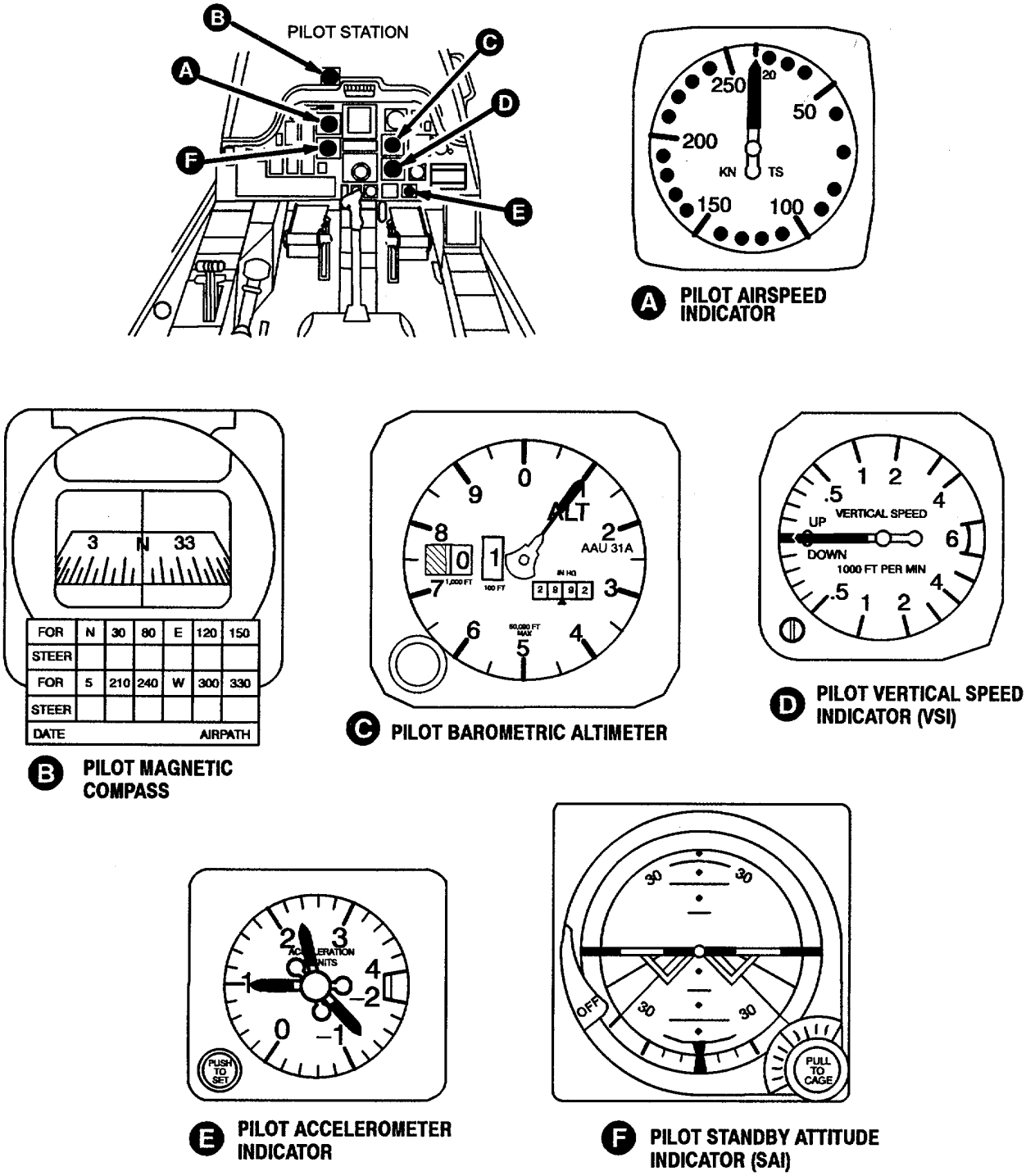

M102-091-1

Figure 8-2. Flight Instruments Component Location (Sheet 1 of 2)

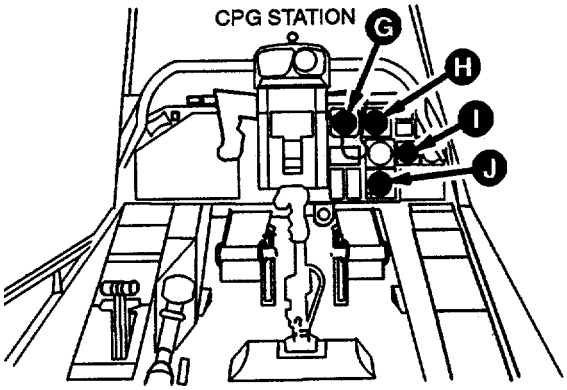

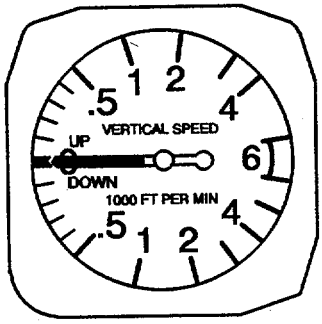

I CPG VERTICAL SPEED INDICATOR (VSI)

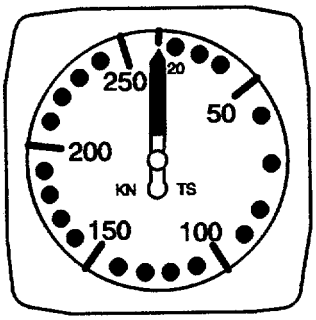

G CPG AIRSPEED INDICATOR

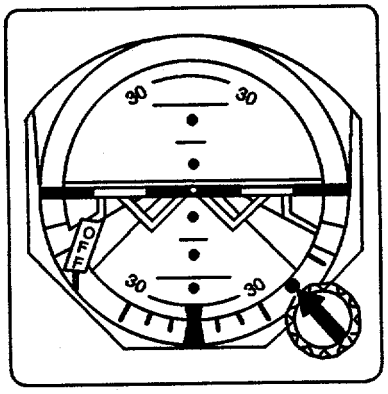

H CPG REMOTE ATTITUDE INDICATOR (RAI)

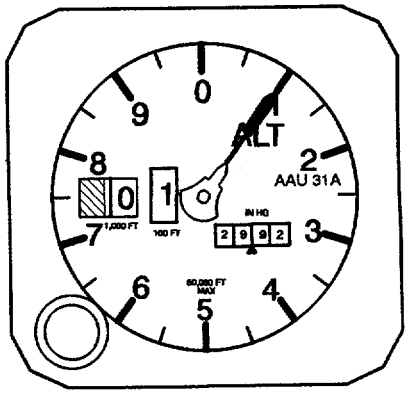

J CPG BAROMETRIC ALTIMETER

M102-091-2

Figure 8-2. Flight Instruments Component Location (Sheet 2 of 2)

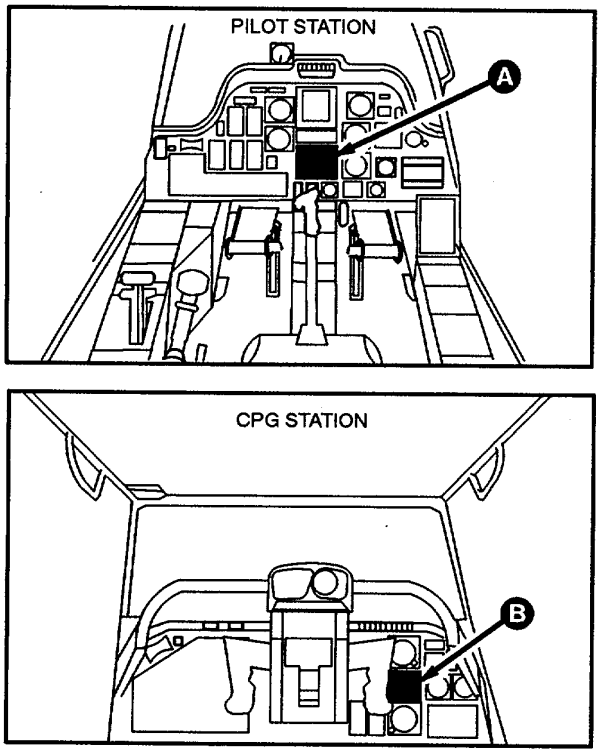

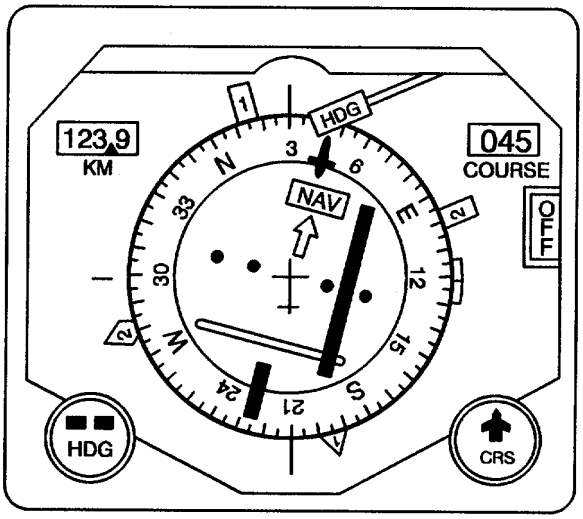

A HORIZONTAL SITUATION INDICATOR (HSI)

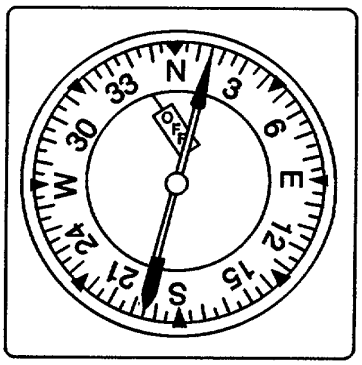

B RADIO MAGNETIC INDICATOR (RMI)

M102-093

Figure 8-3. Navigation Instruments Component Location

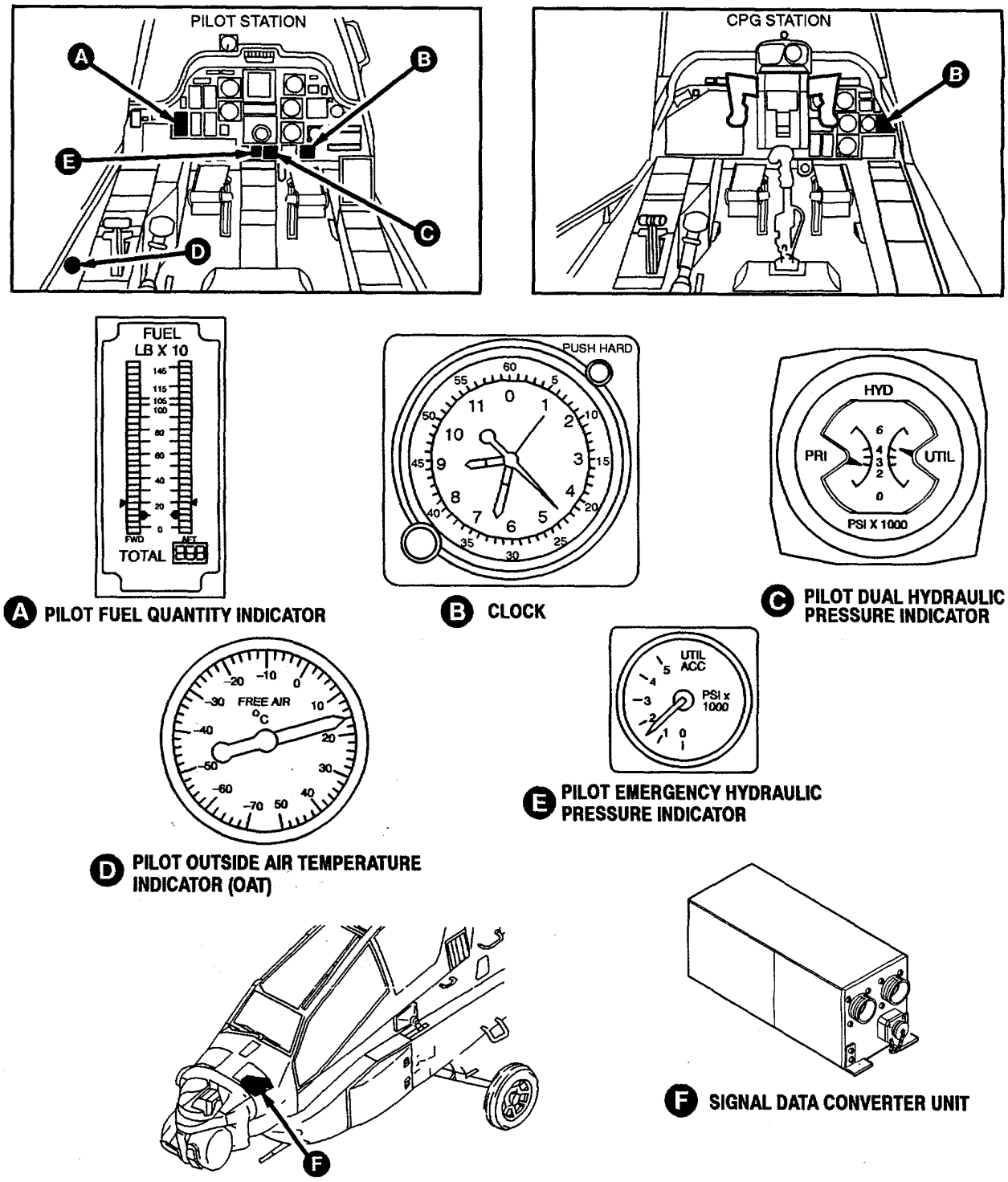

M102-092

Figure 8-4. Miscellaneous Instruments Component Location

CHAPTER 9

ELECTRICAL SYSTEM

BDAR TM PROCEDURES. THE EXPEDIENT REPAIR PROCEDURES IN BDAR TM ARE FOR USE IN COMBAT ONLY. STANDARD MAINTENANCE/REPAIR PROCEDURES ARE TO BE USED AS SOON THEREAFTER AS POSSIBLE.

Section I. INTRODUCTION

9-1. SCOPE.

This chapter contains description, location, serviceability criteria, and cannibalization criteria for the electrical system. Repair of battle damage to the electrical system during combat may be deferrable depending on the damage or component function.

9-2. SYSTEM DESCRIPTION AND LOCATION.

The electrical system consists of the electrical generation, electrical distribution, miscellaneous electrical, caution and warning, and lighting subsystems. Refer to TM 1-1520-238-T for detailed description and operation of specific electrical system components.

9-2.1. Electrical Generation Subsystem (Figure 9-1).

The electrical generation subsystem consists of the following: two AC generators, Generator Control Units (GCU), Transformer/Rectifiers (T/R), and a DC bus tie contactor. The AC generators and the transformer/rectifiers are located in the main transmission bay. The GCUs, generator contactors, and the DC bus tie contactor are located in the electrical power distribution box.

9-2.2. External Electrical Distribution Subsystem (Figure 9-2).

The external electrical distribution subsystem consists of the following: external power monitor and external power contactor. The external power monitor is located in the aft avionics bay and the external power contactor is located in the electrical power distribution box.

9-2.3 Miscellaneous Electrical Subsystem (Figure 9-3).

The miscellaneous electrical subsystem consists of the following: battery, battery relay, and battery charger. The miscellaneous electrical components are located in the aft avionics bay.

9-2.4. Circuit Protection Subsystem (Figure 9-4).

The circuit protection subsystem consists of the following: pilot forward, center, and aft circuit breaker panels and CPG circuit breaker panels 1 and 2. The circuit protection components are located in the pilot and CPG cockpits.

9-2.5. Caution and Warning Subsystem (Figure 9-5).

The caution and warning subsystem consists of the following: pilot master caution/warning panel, pilot caution/warning panel, CPG master caution/warning panel, and CPG caution/warning panel. The caution and warning components are located in the pilot and CPG cockpits.

9-2.6. Lighting Subsystem (Figure 9-6).

The lighting subsystem consists of the following: navigation lights, formation lights, anti-collision lights, searchlight, utility light, secondary lights, and pilot and CPG cockpit edge-lights. The lighting components are located in various external locations and in the pilot and CPG cockpits.

9-3. ASSESSMENT PROCEDURE.

The components of the electrical system are susceptible to ballistic damage or operationally induced damage. Assess damage to determine if repair or cannibalization is necessary. Types of major damage that may be encountered during assessment are gouges, nicks, holes, bends, distortions, creases, and dents.

9-4. SERVICEABILITY CRITERIA.

Refer to TM 1-1520-238-23 for the serviceability criteria for the electrical system.

9-5. CANNIBALIZATION CRITERIA.

The electrical system components that are considered crucial during combat are identified by the electrical system cannibalization candidates list (Table 9-1). Whenever possible, these components should be cannibalized from other aircraft that are incapable of returning to base or considered unable to fly. This list is a prediction based on evaluations of the components' susceptibility of damage, deferrability, and repairability. This is not an exhaustive list of all components which may be cannibalized. When needed, any component may be cannibalized and used provided it is acceptable using the serviceability criteria provided.

Table 9-1. Electrical System Cannibalization Candidates

Nomenclature	Part Number
AC Generator (Figure 9-1, sheet 1)	28B391-2-C
Battery (Figure 9-3)	30637-001
Transformer/Rectifier (Figure 9-1, sheet 3)	9B40-15-D

9-6. REPAIR PROCEDURE INDEX.

Repair Procedure ..... Para

Shielded Cable Splice Repair 9-12

Shielded Cable Repair Segments 9-13

Refer to TM 55-1500-323-24 for additional electrical wiring repairs. Refer to TM 1-1520-238-23 for specific electrical system component removal/installation procedures.

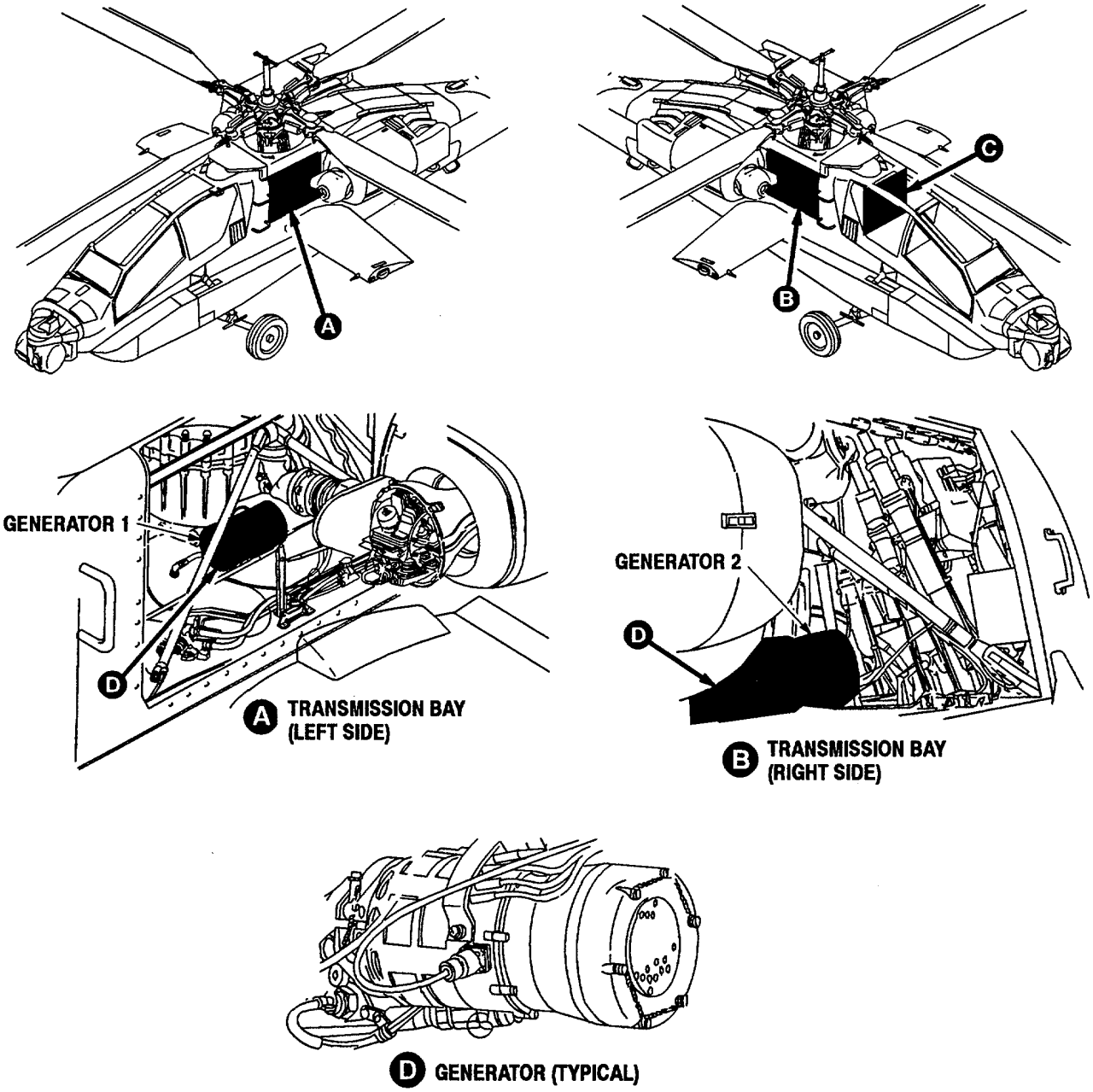

Figure 9-1. Electrical Generation Subsystem Component Location (Sheet 1 of 3)

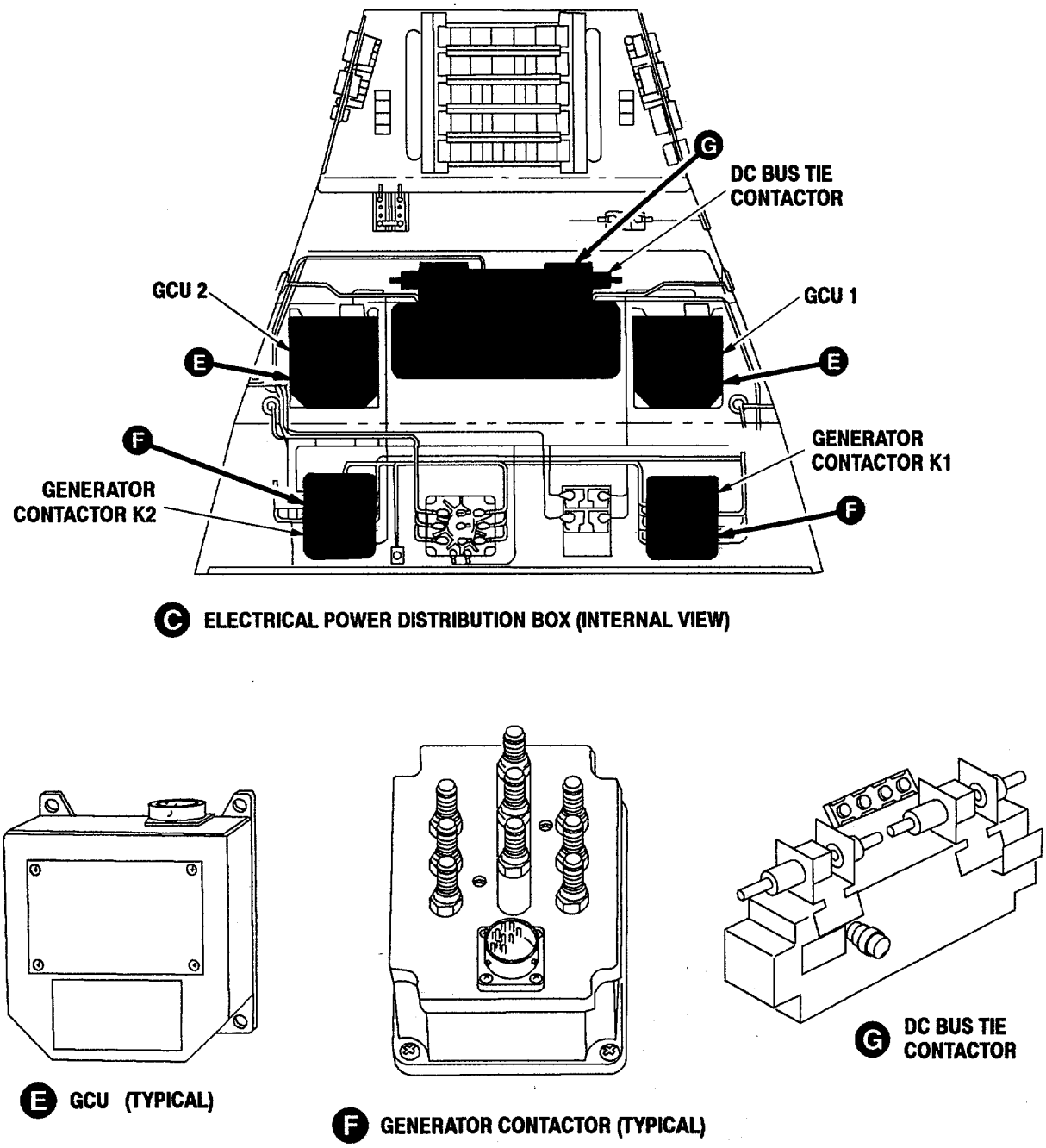

Figure 9-1. Electrical Generation Subsystem Component Location (Sheet 2 of 3)

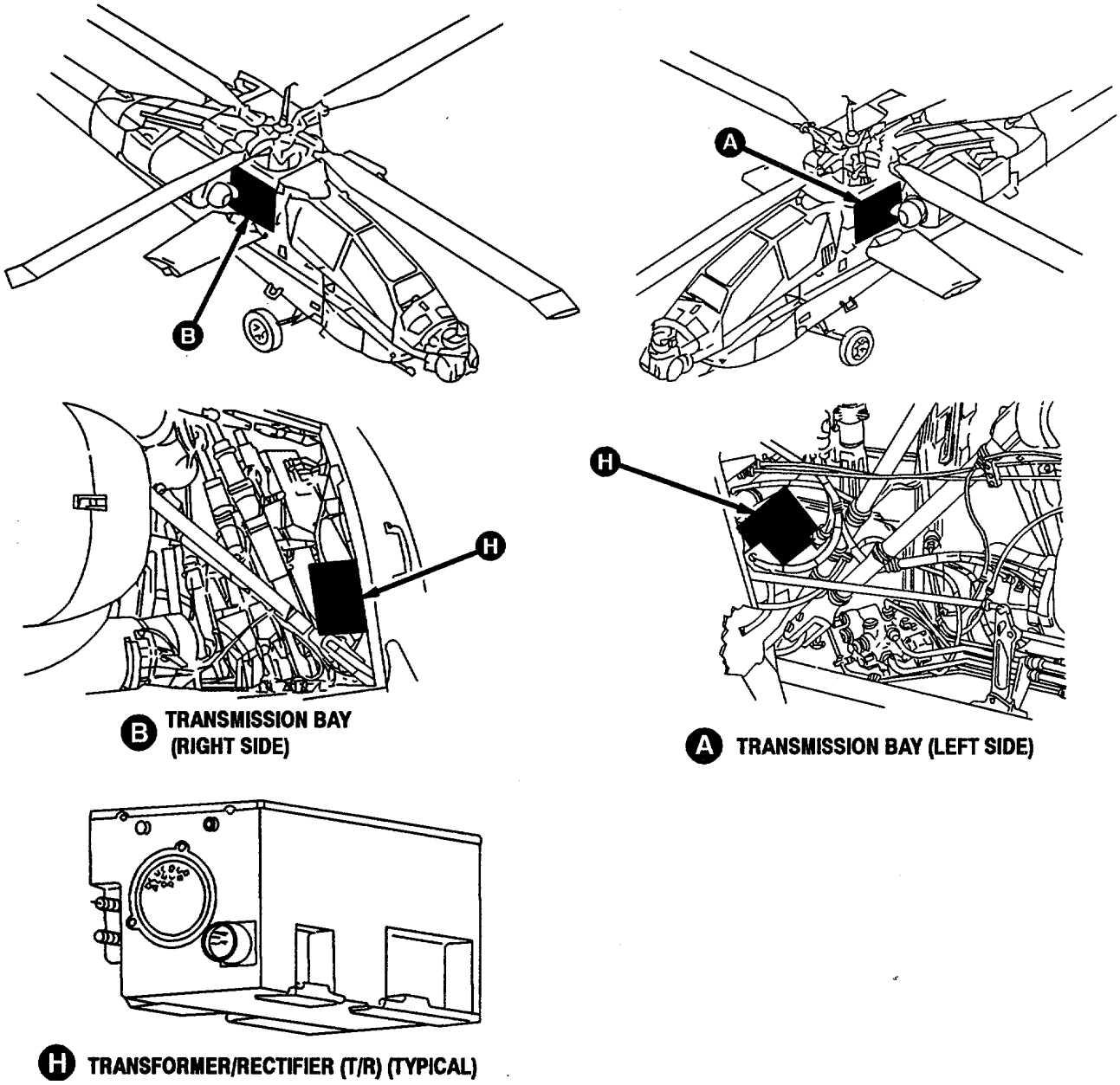

Figure 9-1. Electrical Generation Subsystem Component Location (Sheet 3 of 3)

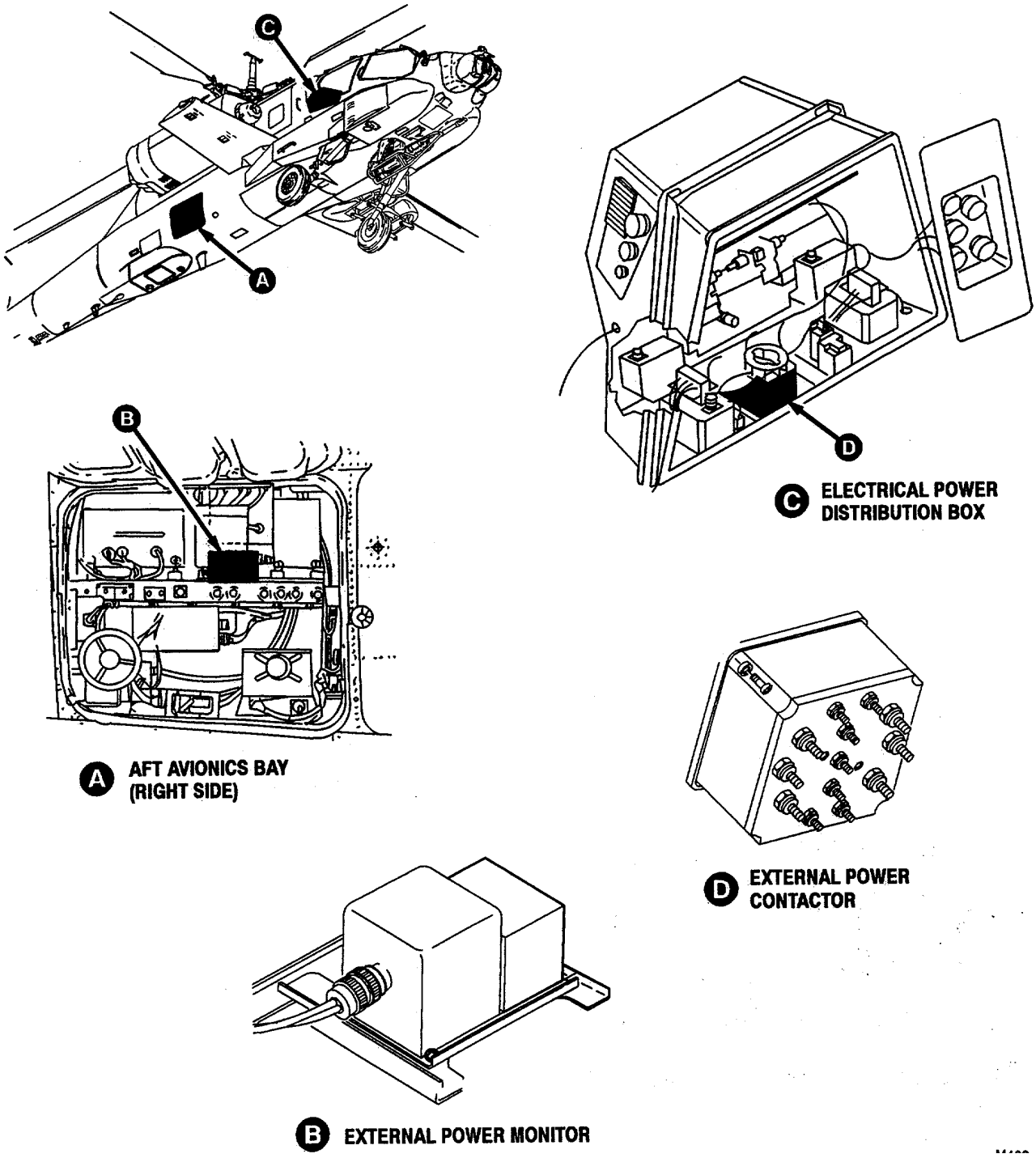

Figure 9-2. External Electrical Distribution Subsystem Component Location

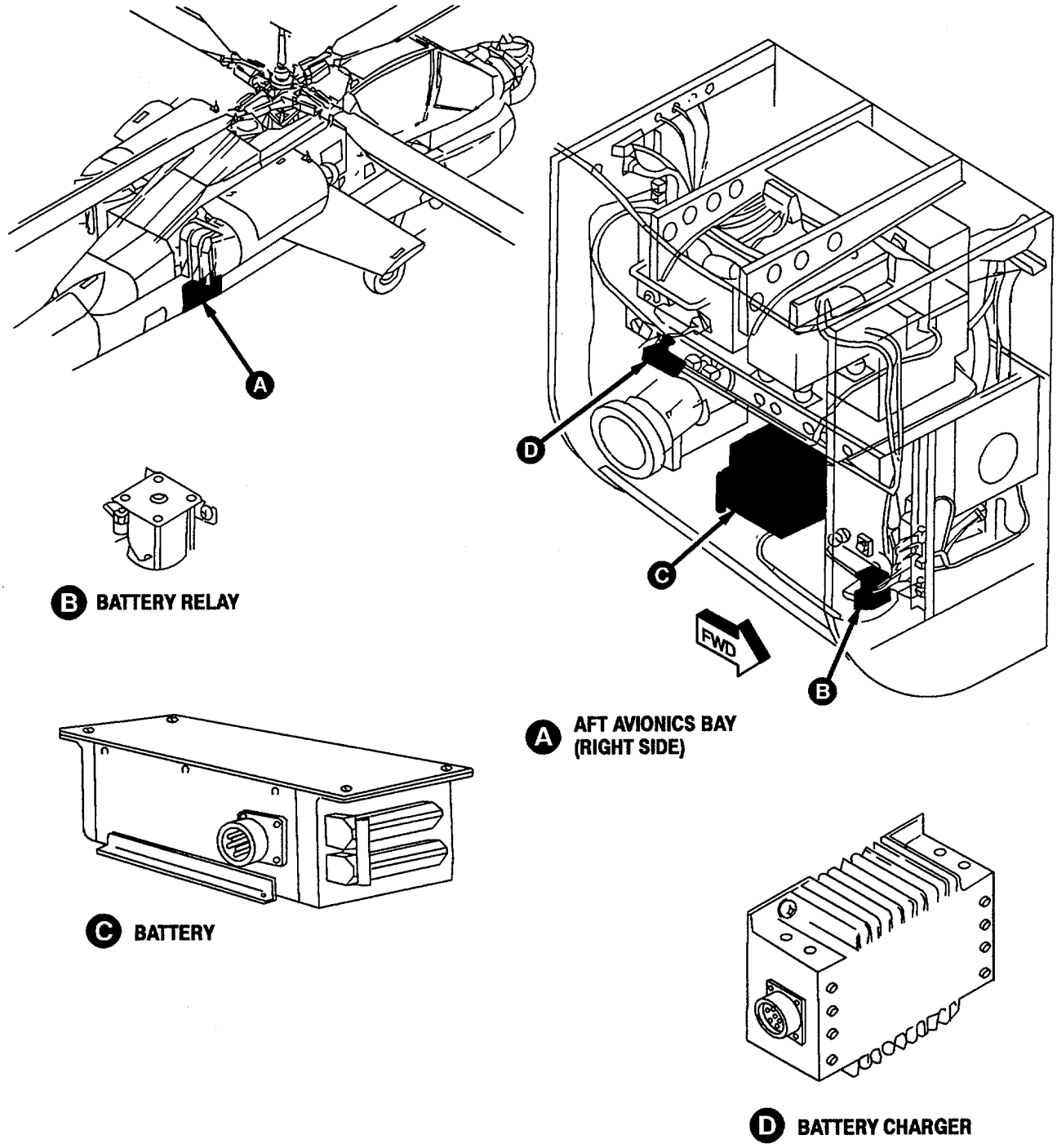

Figure 9-3. Miscellaneous Electrical Subsystem Component Location

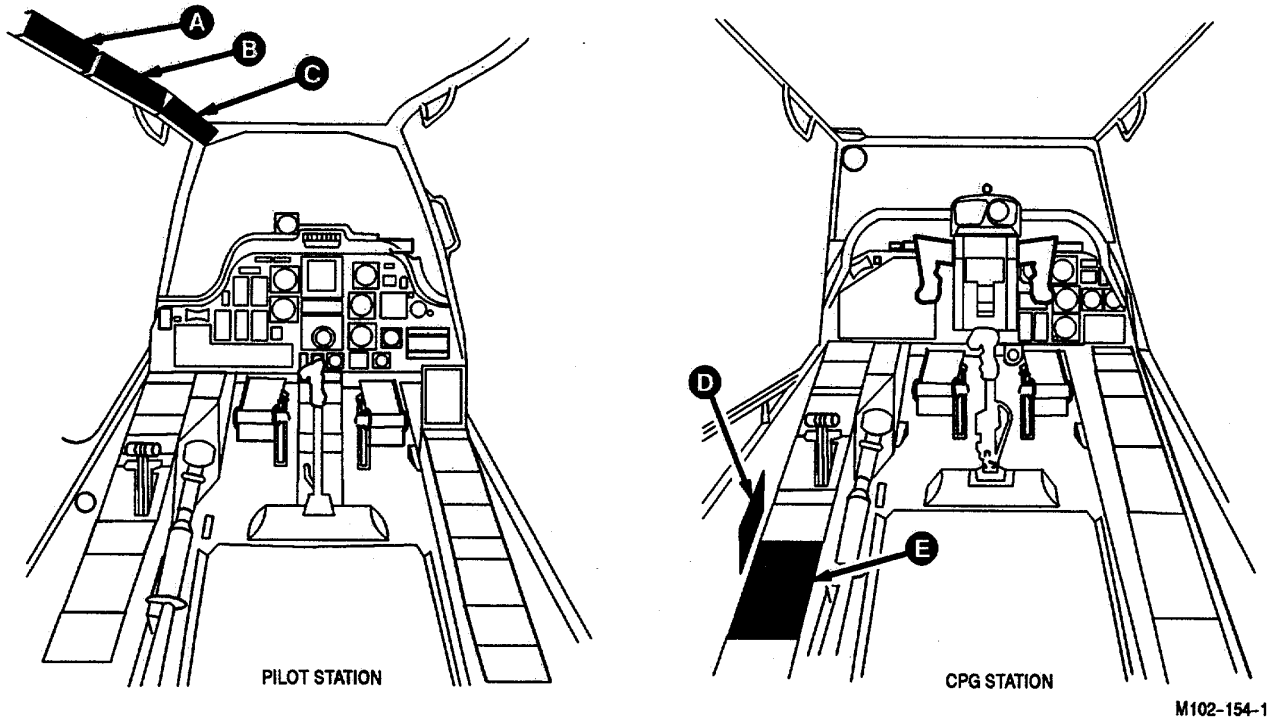

Figure 9-4. Circuit Protection Subsystem Component Location (Sheet 1 of 3)

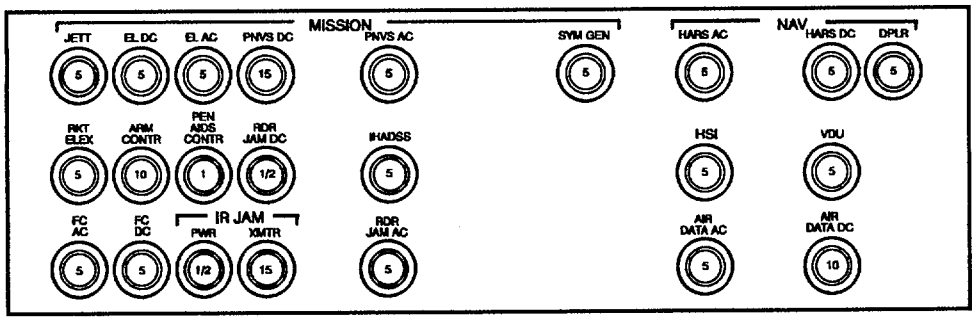

C PILOT FORWARD CIRCUIT BREAKER PANEL

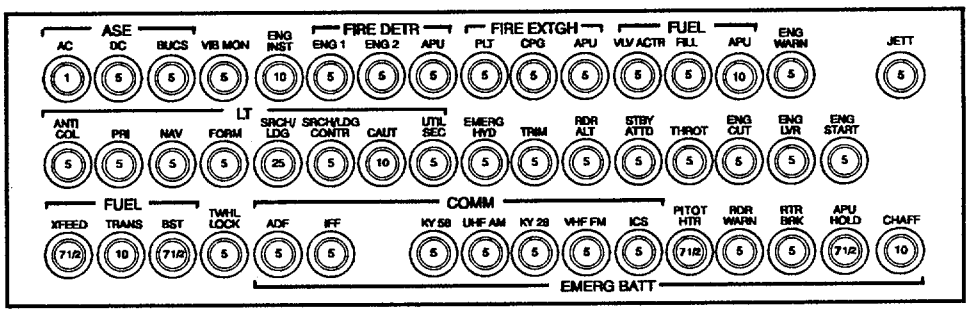

B PILOT CENTER CIRCUIT BREAKER PANEL

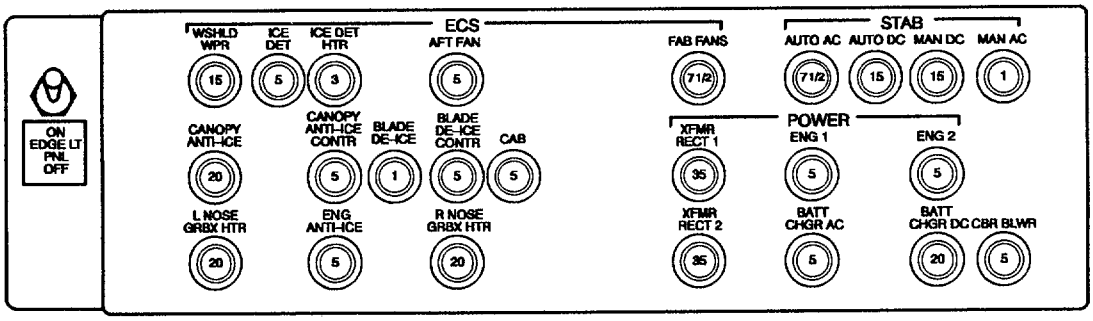

A PILOT AFT CIRCUIT BREAKER PANEL

Figure 9-4. Circuit Protection Subsystem Component Location (Sheet 2 of 3)

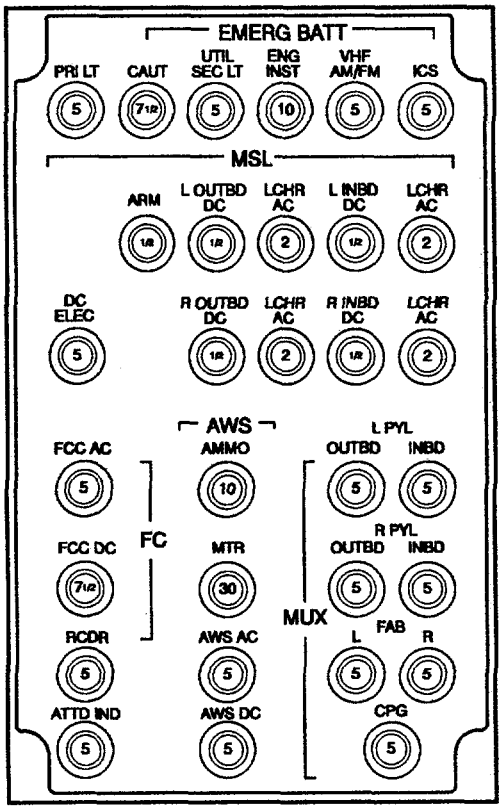

E CPG CIRCUIT BREAKER PANEL 1

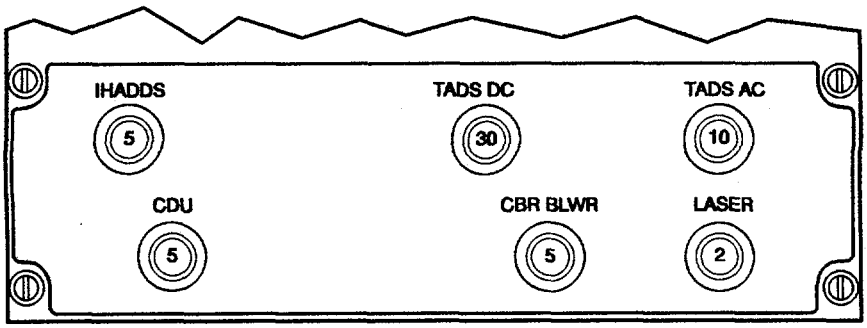

D CPG CIRCUIT BREAKER PANEL 2

Figure 9-4. Circuit Protection Subsystem Component Location (Sheet 3 of 3)

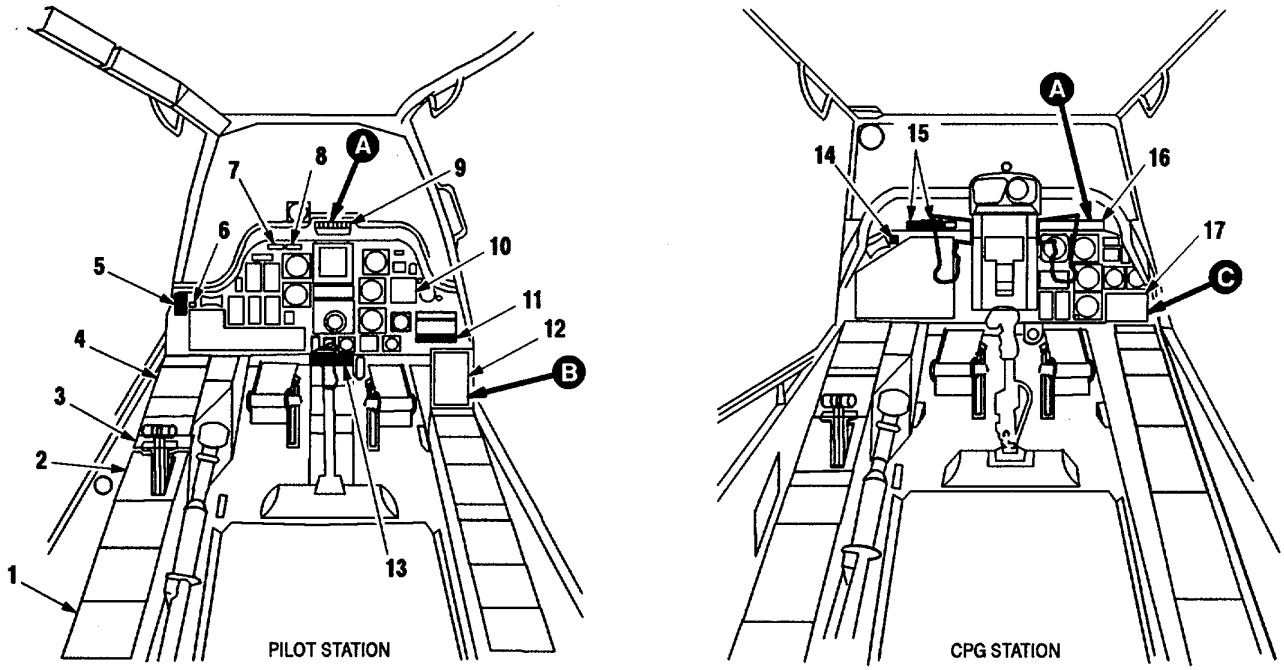

1. PILOT ANTI ICE PANEL
2. PILOT POWER QUADRANT
3. PILOT EMERG PWR CHK OVSP TEST PANEL
4. PILOT ROCKETS CONTROL PANEL
5. PILOT TAIL WHEEL PANEL
6. PILOT ARM / SAFE INDICATOR
7. PILOT ENG 1 FIRE PULL INDICATOR
8. PILOT ENG 2 FIRE PULL INDICATOR
9. PILOT MASTER CAUTION / WARNING PANEL
10. PILOT RADAR WARNING INDICATOR
11. PILOT RADAR WARNING CONTROL PANEL
12. PILOT CAUTION / WARNING PANEL
13. PILOT REMOTE TRANSMITTER SELECTOR INDICATOR PANEL
14. CPG ARM / SAFE INDICATOR
15. CPG ENG 1 / ENG 2 FIRE PULL INDICATORS
16. CPG MASTER CAUTION / WARNING PANEL
17. CPG CAUTION / WARNING PANEL

M102-155-1

Figure 9-5. Caution and Warning Subsystem Component Location (Sheet 1 of 2)

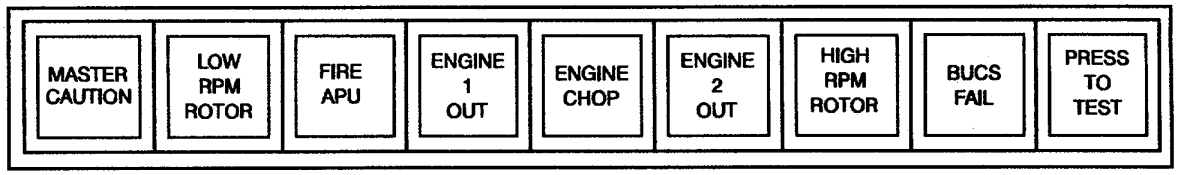

A PILOT AND CPG MASTER CAUTION / WARNING PANEL

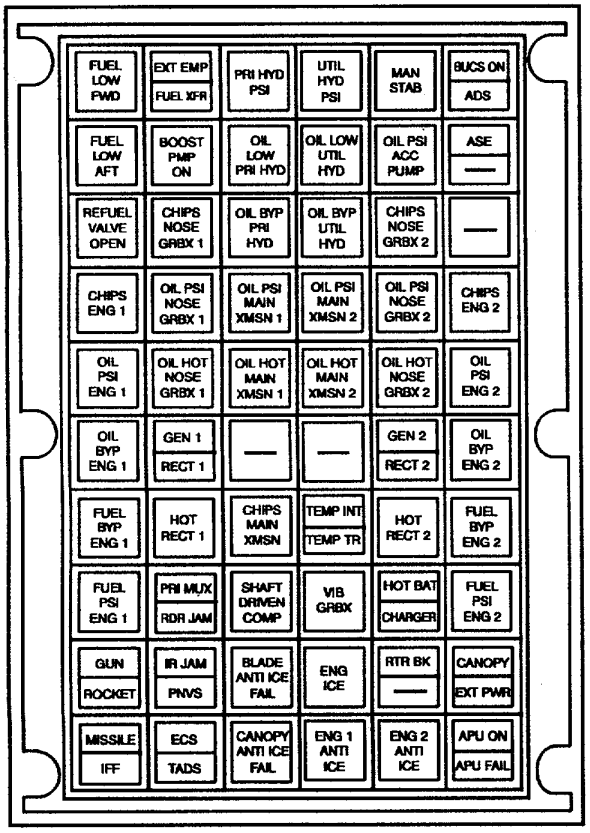

B PILOT CAUTION / WARNING PANEL

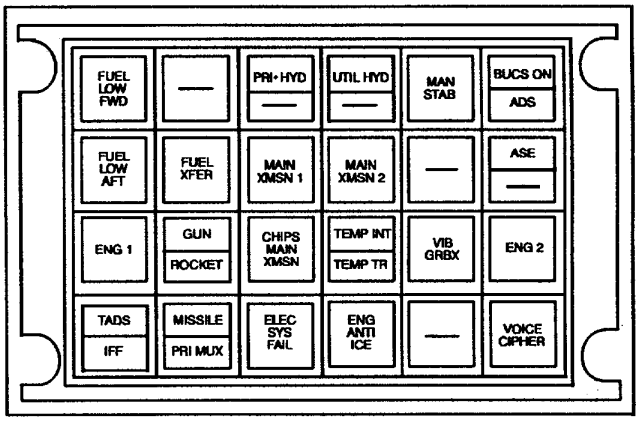

C CPG CAUTION / WARNING PANEL

Figure 9-5. Caution and Warning Subsystem Component Location (Sheet 2 of 2)

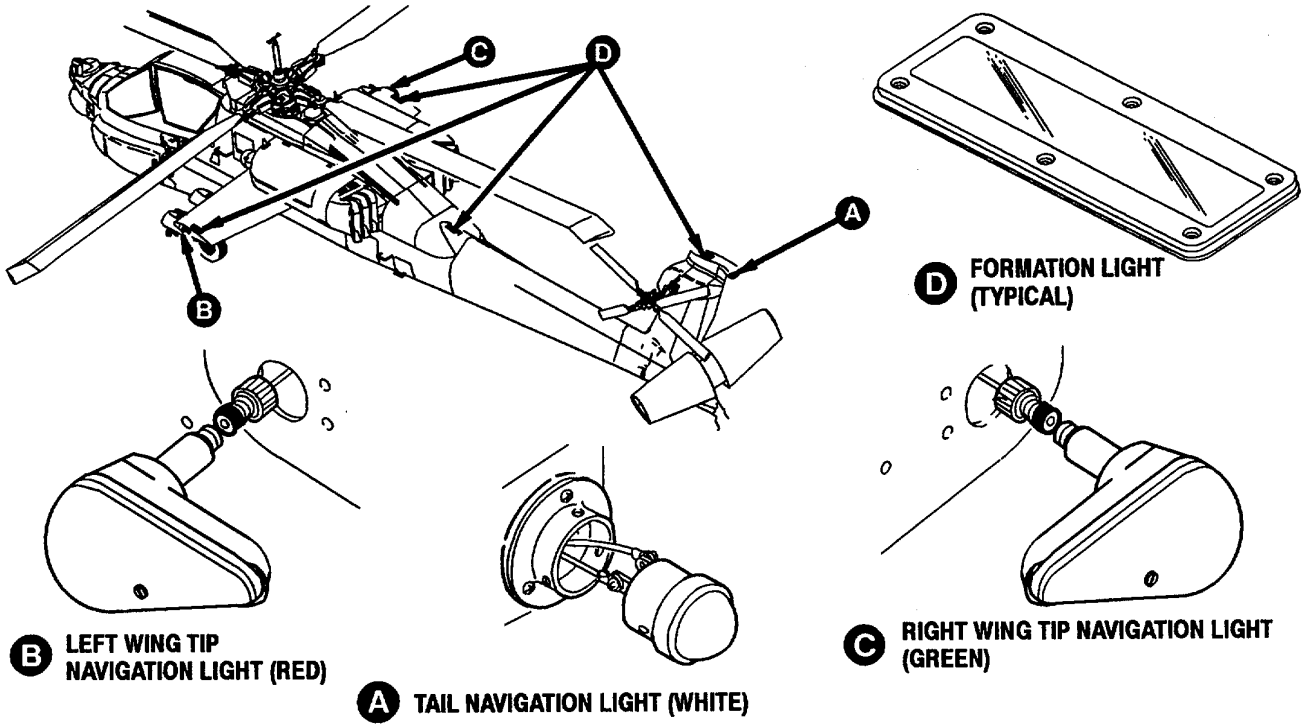

Figure 9-6. Lighting Subsystem Component Location (Sheet 1 of 7)

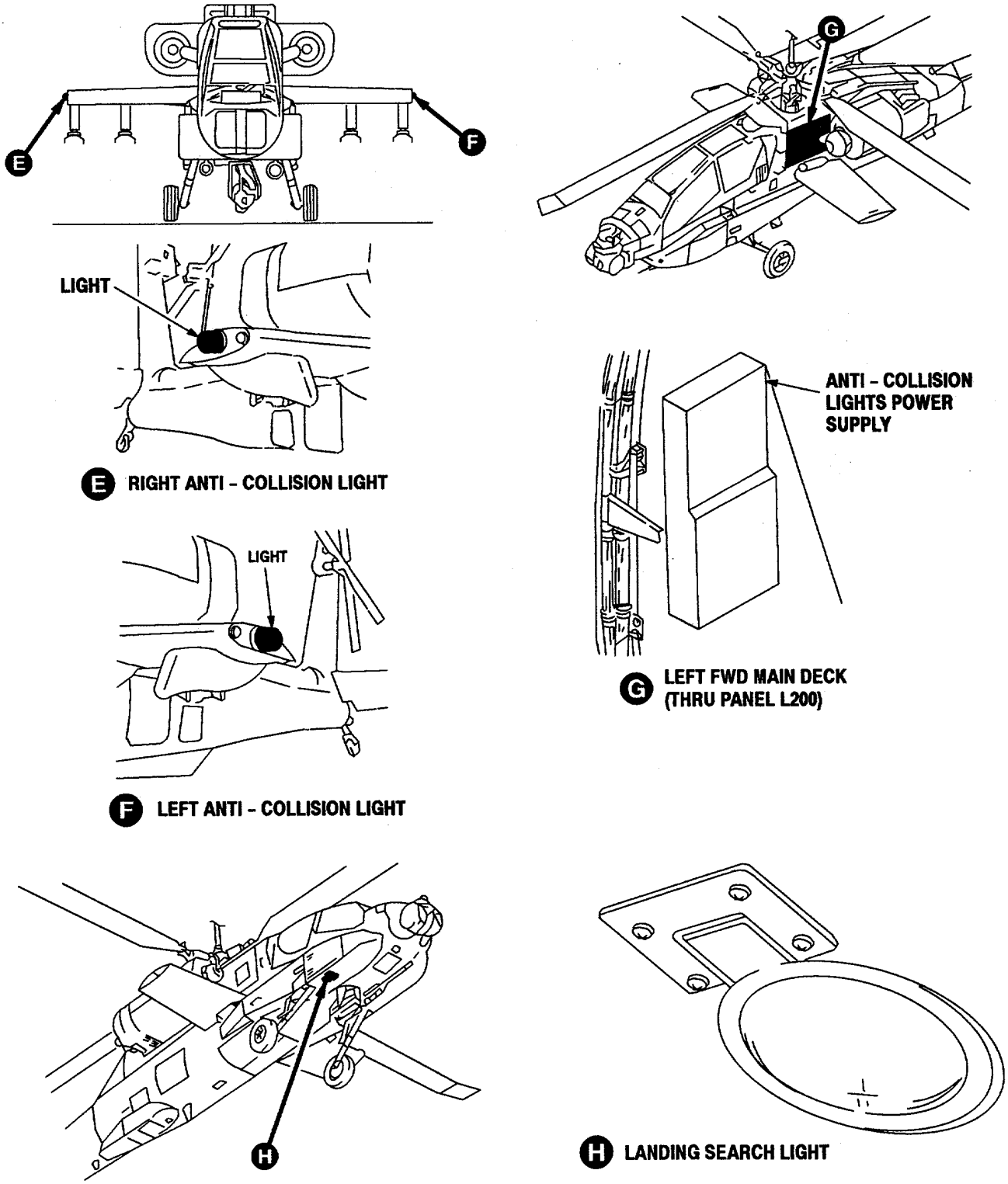

Figure 9-6. Lighting Subsystem Component Location (Sheet 2 of 7)

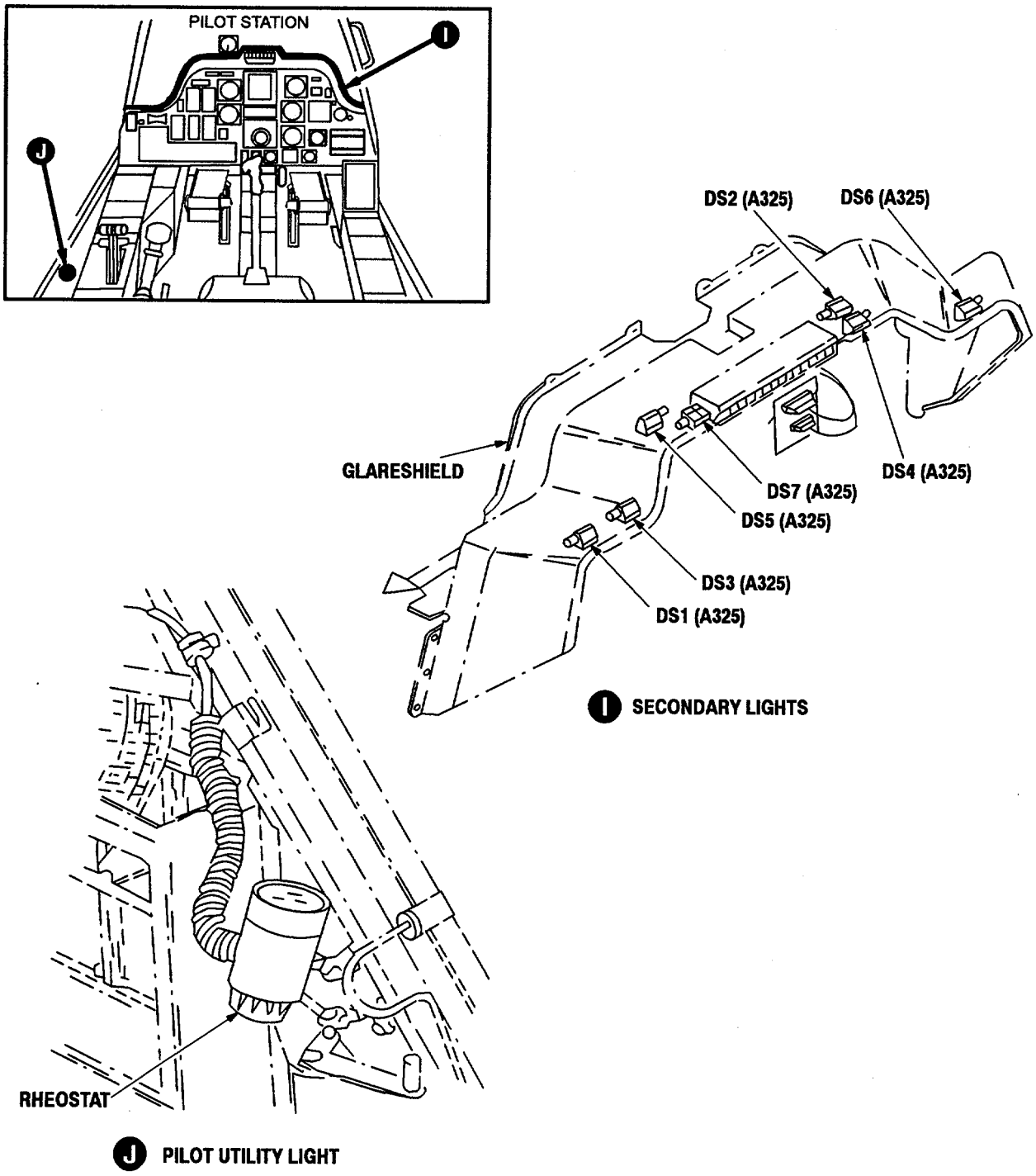

Figure 9-6. Lighting Subsystem Component Location (Sheet 3 of 7)

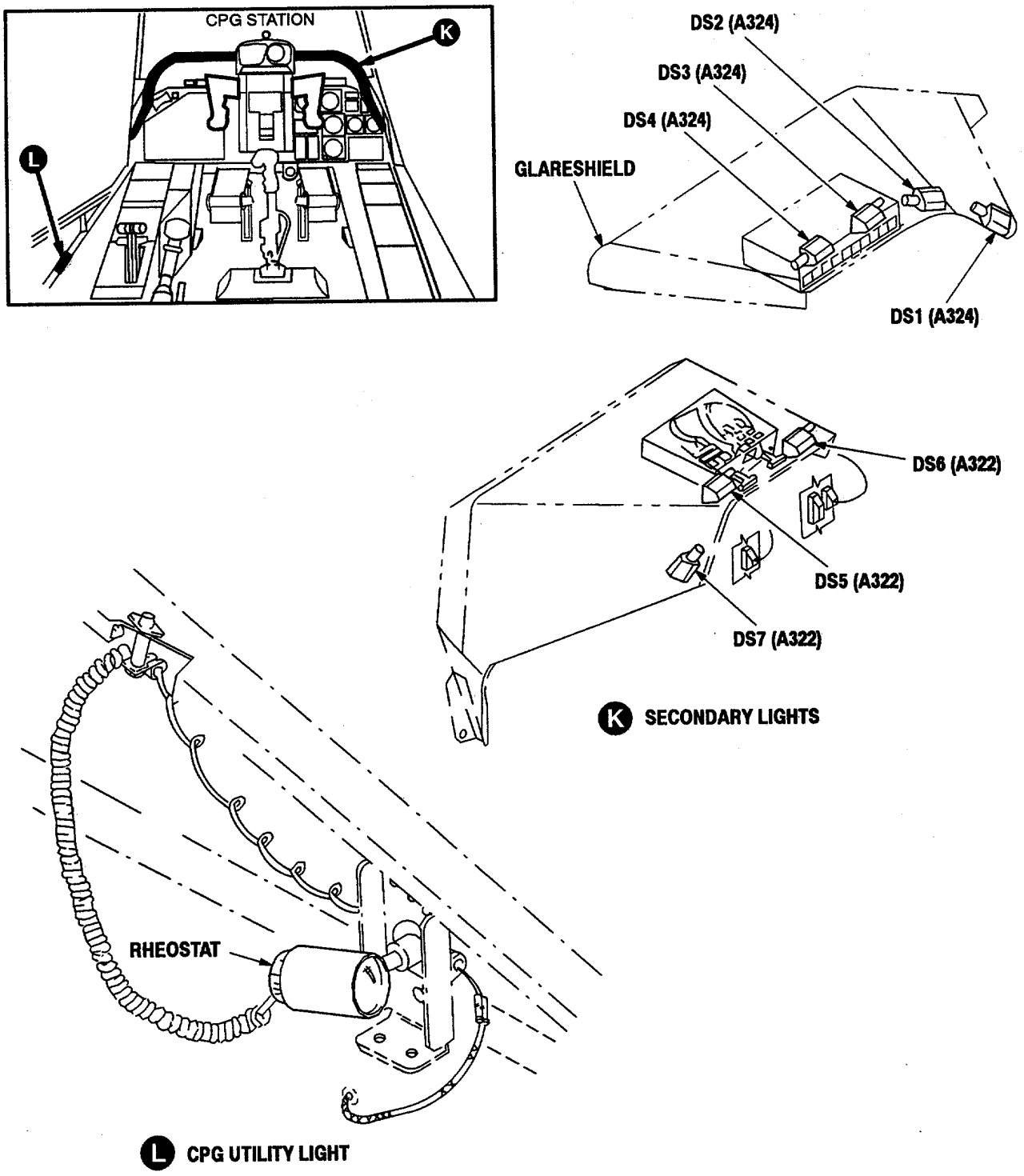

Figure 9-6. Lighting Subsystem Component Location (Sheet 4 of 7)

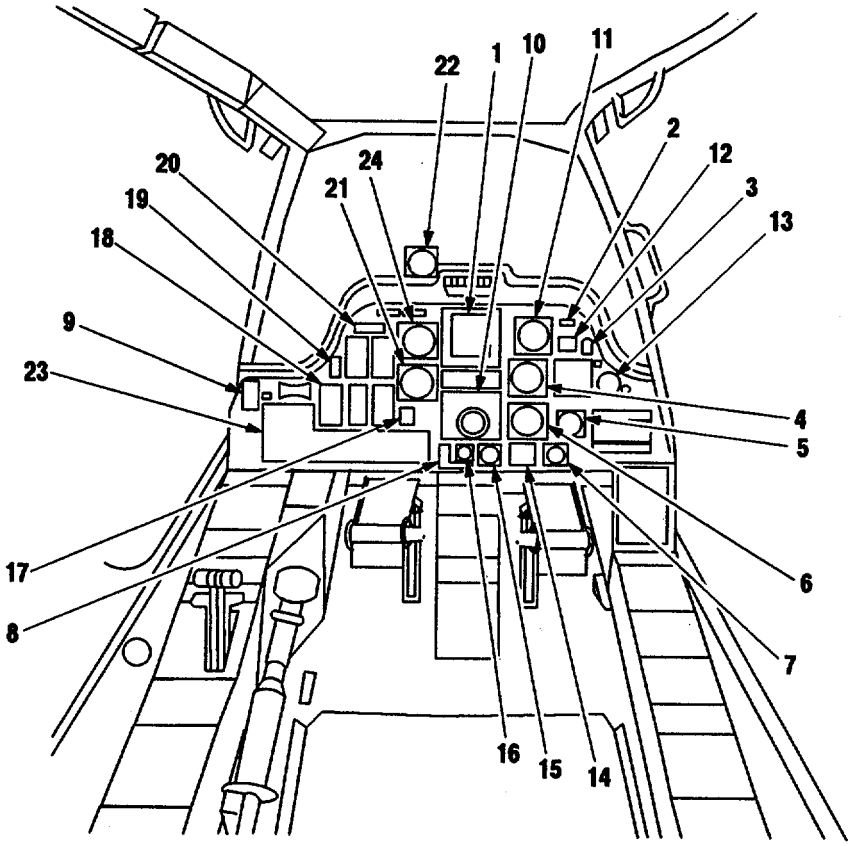

PILOT EDGE-LIGHTS

CHANNEL 1 NO. 1

1. PILOT VIDEO DISPLAY UNIT
2. PILOT RADIO CALL PLACARD
3. PILOT STABILATOR AIRSPEED PLACARD
4. PILOT PRESSURE ALTIMETER
5. PILOT CLOCK
6. PILOT VERTICAL SPEED INDICATOR
7. PILOT ACCELEROMETER

CHANNEL 1 NO. 2

8. PILOT EMERGENCY HYDRAULIC CONTROL PANEL
9. PILOT TAIL WHEEL LOCK PANEL
10. PILOT HORIZONTAL SITUATION INDICATOR
11. PILOT RADAR ALTIMETER
12. PILOT STAB POS INDICATOR
13. PILOT ICING SEVERITY METER
14. PILOT HARS CONTROL PANEL
15. PILOT HYDRAULIC PRESSURE INDICATOR
16. PILOT EMERGENCY HYDRAULIC PRESSURE INDICATOR

CHANNEL 2 NO. 1

17. PILOT ENG OIL INDICATOR
18. PILOT FUEL QUANTITY INDICATOR
19. PILOT DIM I TEST PANEL
20. PILOT FIRE BOTTLE SELECT
21. PILOT STANDBY ATTITUDE INDICATOR
22. PILOT MAGNETIC COMPASS

CHANNEL 2 NO. 2

23. PILOT FIRE CONTROL PANEL
24. PILOT AIRSPEED INDICATOR

M102-156-5

Figure 9-6. Lighting Subsystem Component Location (Sheet 5 of 7)

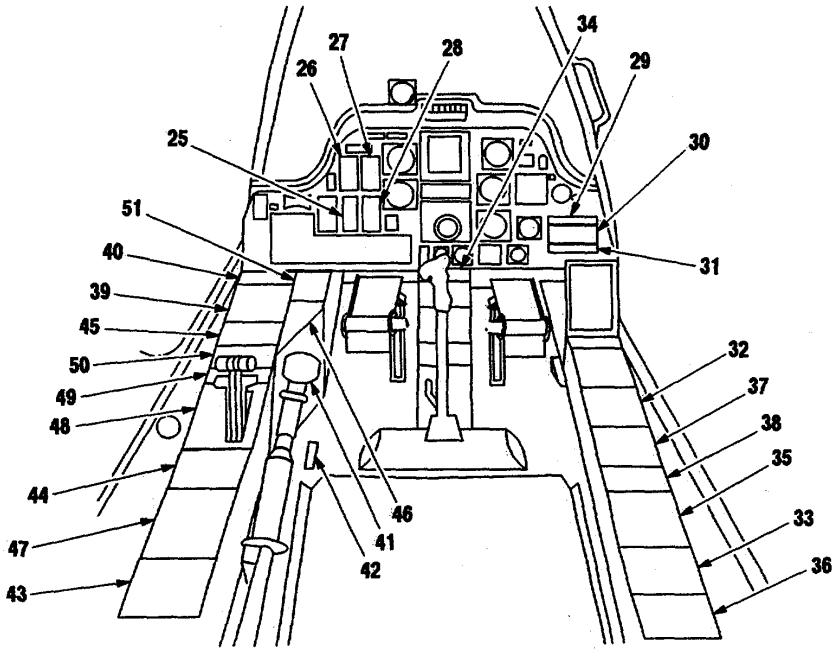

PILOT EDGE-LIGHTS (CONT)

CHANNEL 2 NO. 3

25. PILOT NG RPM % INDICATOR
26. PILOT TGT INDICATOR
27. PILOT TORQUE INDICATOR
28. PILOT ENG-RTR RPM % INDICATOR

CHANNEL 3 NO. 1

29. PILOT RADAR / IR JAMMER CONTROL PANEL
30. PILOT CHAFF DISPENSER CONTROL PANEL
31. PILOT RADAR WARNING CONTROL PANEL
32. PILOT UHF AM RECEIVER I TRANSMITTER
33. PILOT ADF RCVR CONTROL PANEL

CHANNEL 3 NO. 2

34. PILOT REMOTE TRANSMITTER INDICATOR PANEL
35. PILOT IFF CONTROL PANEL
36. PILOT APU FIRE TEST PANEL

CHANNEL 3 NO. 3

37. PILOT VHF AM-FM RECEIVER / TRANSMITTER
38. PILOT SECURE VOICE CONTROL PANEL

CHANNEL 4 NO. 1

39. PILOT ROCKETS CONTROL PANEL
40. PILOT MSL CONTROL PANEL
41. PILOT COLLECTIVE STICK GRIP
42. PILOT STABILATOR MANUAL CONTROL PANEL

CHANNEL 4 NO. 2

43. PILOT ANTI ICE PANEL
44. PILOT FUEL PANEL
45. PILOT STORES JETT PANEL
46. PILOT ECS PANEL

CHANNEL 4 NO. 4

47. PILOT EXT LT / INTR LT PANEL
48. PILOT POWER QUADRANT
49. PILOT EMERG PWR CHK OVSP TEST PANEL
50. PILOT ELEC PWR PANEL
51. PILOT ASE PANEL

M102-156-

Figure 9-6. Lighting Subsystem Component Location (Sheet 6 of 7)

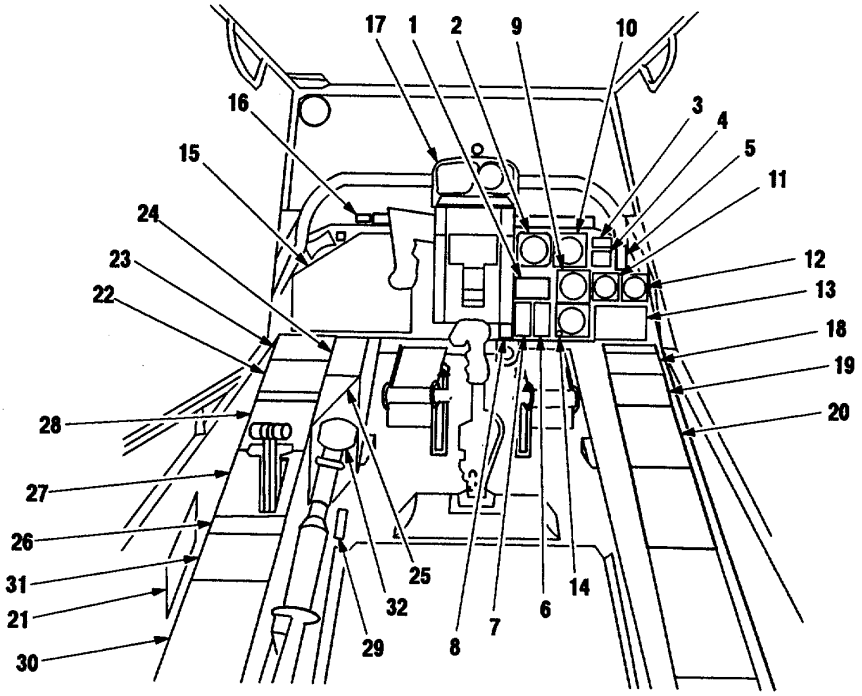

CPG EDGE-LIGHTS

CHANNEL 1 NO. 1

1. CPG SELECTABLE DIGITAL DISPLAY
2. CPG AIRSPEED INDICATOR
3. CPG RADIO CALL PLACARD
4. CPG STAB POS INDICATOR
5. CPG STABILATOR PLACARD
6. CPG ENG-RTR RPM% INDICATOR
7. CPG TORQUE INDICATOR
8. CPG DIM I TEST PANEL

CHANNEL 1 NO. 2

9. CPG RADIO MAGNETIC INDICATOR
10. CPG ATTITUDE INDICATOR
11. CPG VERTICAL SPEED INDICATOR
12. CPG CLOCK
13. CPG CAUTION / WARNING PANEL
14. CPG PRESSURE ALTIMETER

CHANNEL 2 NO. 1

15. CPG FIRE CONTROL PANEL
16. CPG FIRE BOTTLE SELECT PANEL
17. CPG OPTICAL RELAY TUBE

CHANNEL 3 NO. 1

18. CPG COMMUNICATION SYSTEM CONTROL PANEL
19. CPG VHF AM - FM RECEIVER 1 TRANSMITTER

CHANNEL 3 NO. 2

20. CPG DPLR NAV PANEL

CHANNEL 4 NO. 1

21. CPG CIRCUIT BREAKER PANEL 2
22. CPG VIDEO RECORDER CONTROL PANEL
23. CPG MSL CONTROL PANEL
24. CPG DATA ENTRY KEYBOARD
25. CPG RADIO MONITOR PLACARD

CHANNEL 4 NO. 2

26. CPG FUEL PANEL
27. CPG POWER QUADRANT
28. CPG AUX I ANTI-ICE PANEL
29. CPG STABILATOR MANUAL CONTROL PANEL

CHANNEL 4 NO. 3

30. CPG CIRCUIT BREAKER PANEL 1
31. CPG INTR LT PANEL
32. CPG COLLECTIVE STICK GRIP

M102-156-7

Figure 9-6. Lighting Subsystem Component Location (Sheet 7 of 7)

SECTION II. ELECTRICAL WIRING

9-7. GENERAL.
The objective of electrical and avionics system battle damage repair is to restore damaged circuits which are essential. It is also used to make nonessential circuits safe.

9-8. ELECTRICAL AND AVIONIC REPAIRS.
Electrical and avionics equipment receiving significant battle damage will usually not be repairable. The equipment may require replacement to meet mission requirements. When replacements for nonessential system units are not available, the technician should, when possible, make the necessary repairs or adjustments on the unit for one more combat sortie. However, avionics wiring, coaxial cables, and general aircraft wiring can be repaired using a variety of procedures and materials.

9-9. ISOLATION OF NONESSENTIAL SYSTEMS.
To isolate damaged nonessential system wiring, crimp-on end caps, tape or any other insulating method may be used. Secure wires to some form of structure.

9-10. ACM/BDR WIRING REPAIR KIT.
The wiring repair kit contains the necessary tools, materials, and test equipment for the repair of combat damaged U.S. Army rotary wing aircraft electrical wiring systems.

9-10.1. Description. The wiring repair kit consists of four major subassembly kits. The subassembly kits are packaged in militarized fiberglass cases and are transportable by one or more maintenance personnel. Each subassembly kit contains the necessary tools, materials, or test equipment to perform a specific portion of the aircraft wire repair task. Three subassembly kits are dedicated for use at the AVIM or AVUM areas and the emergency wire repair kit is for use at a downed aircraft site. The subassembly kits are as follows:

9-10.1.1. Test Equipment Kit. Contains diagnostic and test equipment and adapters.
9-10.1.2. Connector Repair Kit. Contains electrical connector insertion or removal tools, crimping tools with dies, and wire stripping tools with dies.

9-10.1.3. Wire Repair Kit. Contains wire, shield, and coaxial cable cutters, strippers, crimpers, and splice materials. Also contains certain bulk wire, shield, insulation materials, terminal boards, and cable tying materials. This kit also contains certain connector pins and sockets for use with the connector repair kit. A heat gun is included to complete environmentally protected splices.

9-10.1.4. Emergency Wire Repair Kit. Contains materials and tools needed to perform emergency repairs that will allow self recovery of the aircraft. The emergency repair and aircraft recovery kit is compact to facilitate transport to the downed aircraft site.

9-10.2. Operation. The four kits also contain environmentally protected data sheets as follows:
a. Instruction sheets - for the tools, repair materials, and test equipment contained within the kit.
b. Contents chart - for inventory control of the componentscontained within each kit storage compartment.
c. Cross-reference charts - for re-ordering kit components.
d. Application charts - to provide proper selection of kit components for a specific task.
The information contained in the kits is intended for use during combat to repair aircraft wiring systems without using any other TM.
9-10.3. Subassembly Kits.
9-10.3.1. Test Equipment Kit (Figure B-6, App B).
9-10.3.1.1. Mission and Major Components. The test equipment kit is used for diagnosing and troubleshooting damaged aircraft wiring systems and for verifying wiring repair. The kit contains electronic instruments for conducting necessary tests. The instruments and their intended use are:
9-10.3.1.1.1. Digital Multimeter (DMM). A digital multimeter is provided for measurement of circuit voltage (AC to 1000 VAC, DC to 1500 VDC); current (up to 10 amps); and resistance (0 to 20 megohms). An "instant-on" continuity indicator is provided. The DMM is waterproof and built for use in hostile environments.
9-10.3.1.1.2. Time Domain Reflectometer (TDR). A TDR is provided to locate and analyze faults in coaxial cables. The TDR provides a display of

the cable condition. The display indicates the type of fault present (short, open, crimped, frayed, or crushed) and the distance of the fault (in 0.1 foot increments) from a reference point at the TDR input. The TDR also provides a chart recorder which is used to make a permanent record of a repaired cable's TDR signature for inclusion in the aircraft records. The TDR may also be used to test twisted-pair wires.

CAUTION

The TDR battery pack will discharge if left in the TDR during extended storage. Remove the battery pack from the TDR and place in spare compartment of the test equipment kit case during storage periods.

The test equipment kit also contains test leads and adapters to allow connection of the TDR or DMM to the wires or cable undergoing repair. Other support equipment such as a flashlight, illuminated magnifying glass, spare D-cell, AAA, and 9 volt batteries, and rolls or TDR chart recorder paper are provided.

9-10.3.1.2. Use. Prior to using kit contents, a good working knowledge of the test equipment operating procedures and adapter selection is required. The environmentally protected data sheets within the kit provides the operating instructions for the TDR and DMM. It also contains adapter selection charts for connecting the TDR and DMM to coaxial cable connectors, connector pins and sockets, bare wires, and terminal boards. Proficiency in the use and application of this material is necessary if the desired wire or cable diagnostic test capability is to be achieved.

9-10.3.1.3. Procedure. The following procedure is to be followed when using the test equipment kit for electrical wiring system diagnostic test, troubleshooting, or verifying repairs:

1. Perform necessary steps to make aircraft safe, such as making sure all electrical power is disconnected and all systems are deactivated. Disconnect aircraft's battery.
2. Review DA Form 2408-13-3 and apply this information to aircraft serviceability tables.
3. Establish cable or wire repair sequence, starting with most essential requirement and proceeding to non-essential, as time permits.
4. Determine test required (continuity with DMM; location and type of fault with TDR).
5. Select proper adapters from applicable charts.
6. Perform necessary test using DMM or TDR operating instructions.
7. Repair fault using connector repair kit or wire repair kit.
8. Retest to determine effectiveness of repair. Take TDR recordings of coaxial cable repairs for aircraft logs.
9. Return all contents of test equipment kit to proper storage compartment. Inventory kit contents, account for all components, and prevent FOD.
10. After completing all repairs and verifying kit contents, perform standard check-out of aircraft and systems (powered).

9-10.3.2. Connector Repair Kit (Figure B-1, App B).

9-10.3.2.1. Mission and Major Components. The connector repair kit is used to repair damaged wiring connector pins and sockets. The kit contains the necessary tools to remove or insert connector pins and sockets, strip wiring, and crimp wires to connector pins and sockets.

9-10.3.2.1.1. Insertion and Removal Tools. Insertion and removal tools are supplied f or use with front or rear release connector pins or sockets. Selection charts and tool instruction sheets are provided to aid in selection and use of the proper connector repair tool.

9-10.3.2.1.2. Wire or Cable Strippers. Strippers are provided for wires and coaxial cables. Stripper blades are provided for the most common aircraft electrical wiring insulation materials. Instructions for blade selection and stripper operations are supplied.

9-10.3.2.1.3. Connector Pin and Socket Crimp Tools. The kit contains crimping tools, dies, and locating turrets for crimping connector pins and sockets to wire. Selection charts and the tool instruction sheets are supplied to aid in selection and use of the proper tools, dies, and turrets.

9-10.3.2.2. Use. Prior to using the kit's contents, a working knowledge of the tool instructions, tool application charts, and tool selection charts is required. The environmentally protected data sheets within the kit provides instructions for the use of the tools and tool selection charts. Proficiency in the use and application of this material is necessary if the desired connector repair capability is to be achieved.

9-10.3.2.3. Procedure. Follow these procedures when using the connector repair kit:

1. Perform necessary steps to make aircraft safe, such as making sure all electrical power is disconnected and all systems are deactivated. Disconnect aircraft's battery.
2. Review DA Form 2408-13-3 and apply this information to aircraft serviceability tables.
3. Establish connector repair sequence, starting with most essential requirement and proceeding to nonessential, as time permits.
4. Perform diagnostic and troubleshooting tests as applicable.
5. Demate connector, determine contact type (pin or socket) and gage affected.
6. Use illuminated magnifying glass to aid in determining part number of connector to be repaired.
7. Use illuminated magnifying glass to aid in determining type and gage of wire used in system.
8. Refer to wire stripper selection chart to select proper stripping blade and handle. Install blades into stripper handle using Proto 9208 nut driver. Use contents chart from compartment "A" to determine location of nut drivers, stripper blades, and handle.
9. Refer to tool selection charts to determine contact's removal or installation tool, crimp tool, turret head positioner or die set, and replacement contact part number.

NOTE

Contact part numbers marked with an asterisk (*) in charts are available in compartment B1 through B4 of connector repair kit. Contact part numbers not marked must be obtained from other stock areas.

10. Remove necessary tools from kits' storage compartment. Assemble turret head, positioner, or die set to crimp tool handle.
11. Remove damaged pin or socket from connector using removal tool.
12. Prepare wire for new pin or socket using wire stripper. Splice in additional wire, if necessary.
13. Select proper pin or socket. Install into prepared wire and crimp using crimp tool assembly. You may observe proper wire insertion into contact through contact inspection hole.
14. Install pin or socket into connector using insertion tool.
15. Perform remaining repair actions.
16. Use test equipment kit to verify repairs.
17. Return all components to their proper storage compartments, and to prevent FOD.
18. After completing all repairs and verifying kit contents, perform standard check-out of aircraft and systems (powered).

9-10.3.3. Wire Repair Kit (Figure B-5, App B).

9-10.3.3.1. Mission and Major Components. The kit is used to repair damaged aircraft electrical wires and coaxial cables. The kit contains the necessary tools and materials to strip and splice wire and heat shrink the environmental seal insulation material. Environmentally protected splices are provided for shielded and unshielded wires and coaxial cables as well as pre assembled wire splice segments. Bulk wire, wire shield, and heat shrinkable tubing stocks are also provided. The major tools and repair materials are:

9-10.3.3.1.1. Model HT-900A Heat Gun. The heat gun is a compressed air and nitrogen heating tool. It provides a portable source of heat for use with heat shrinkable tubing, environmentally sealed splices and

meltable solder fittings. The heat gun may be used on fueled aircraft. The heat gun is self-contained, but requires compressed air or nitrogen and electrical power. Adapters are for use with various air or nitrogen supply hoses and AC power sources.

9-10.3.3.1.2. Wire Strippers and Cutters. Wire strippers and cutters are for use on unshielded and shielded wires, and coaxial cable. Stripper blades are provided for the most common aircraft wiring insulation materials. Instructions for blade selection and stripper operation are supplied.

9-10.3.3.1.3. Crimp Tools. The kit provides crimp tools and instructions for both wire crimp splices and terminal lugs.

9-10.3.3.1.4. Repair Materials. Repair materials for shielded or unshielded wire and coaxial cables are provided. Bulk stock of shielded or unshielded wire, tubular shield braid, heat shrinkable tubing and wire harness tie tape is provided on spools stored in a removable rack. Other repair materials are stored in plastic boxes to reduce FOD hazard. The boxes are labeled at each end with the repair materials location reference number, name, and part number. A label on the box cover contains abbreviated instructions for using the repair material. Additionally, four boxes are used to store connector pins and sockets.

9-10.3.3.2. Use. Before using kit components, a working knowledge of the instructions and material application charts is required. The environmentally protected data sheets provide instructions for using the tool, the component selection chart and proper application of repair materials. Proficiency in the use and application of this material is necessary to achieve desired repair capability.

9-10.3.3.3. Procedure. The following procedure is typical when using the kit to repair wire or cable:

1. Perform necessary steps to make aircraft safe, such as making sure all electrical power is disconnected and all systems are deactivated. Disconnect aircraft's battery.
2. Review DA Form 2408-13-3 and apply this information to aircraft serviceability tables.
3. Establish sequence for wire repair, starting with most essential requirement and proceeding to non-essential, as time permits.
4. Perform diagnostic and troubleshooting tests as applicable.
5. Use illuminated magnifying glass to aid in determining type and gage of wire used in system to be repaired.
6. Use repair component selection charts to determine repair material to be used.
7. Refer to general wire repair procedure and material instructions to determine tools required.
8. Set up and check out heat gun at repair site.
9. Refer to contents chart to locate required tools and repair material.
10. Remove necessary tools and repair materials from kits. Verify that proper stripper blades are installed in stripper handle. Change as necessary.
11. Prepare wire or coaxial cable for installation of repair material.
12. Install repair material per instructions.
13. Perform remaining repairs on other wire or coaxial cables.
14. Use test equipment to verify repair.

NOTE

Use TDR to obtain a chart record of all repairs performed on coaxial cables. This record will be included in aircraft maintenance records. It will provide a signature of coaxial cable characteristics if a future system degradation occurs. Clearly annotate chart record with aircraft serial number, date, airframe hours, cable number, system, repair action performed, and vertical and horizontal TDR attenuations.

15. Return all components to their proper storage compartments, and to prevent FOD.
16. After completing all repairs and verifying kit contents, perform standard check-out of aircraft and systems (powered).

9-10.3.4. Emergency Wire Repair and Aircraft Recovery Kit (Figure B-3, App B).

9-10.3.4.1. Mission and Major Components. The kit is used for emergency repairs on a downed aircraft's

electrical wiring to allow a self-recovery flight to an AVIM or AVUM area. The kit contains the basic tools, repair materials, and test equipment required to perform emergency splice repairs. The major tools, test equipment, and repair materials are:

9-10.3.4.1.1. Digital Multimeter (DMM). A multi-meter with probes is provided for measurement of AC and DC voltages and current and continuity tests. The DMM is waterproofed and built for use in hostile environments. This instrument is also provided in the equipment kit.

9-10.3.4.1.2. Wire Repair Segments. Partially assembled wire splice segments are provided in three gages to quickly repair severed wires. These splice segments have sealing sleeves attached to each end of the wire.

9-10.3.4.1.3. Assorted Wire Splices. Assorted wire splices are packaged in three sizes. The splices are used for repairs other than those using the wire repair segments.

9-10.3.4.1.4. Bulk Wires. Two spools of bulk wire are provided for use with the assorted wire splices. They are used for repairs other than those using the wire repair segments.

9-10.3.4.1.5. Wire Strippers. Two wire strippers are provided; one for stripping Kapton insulated wires and one with general purpose blades for stripping all other wire insulation materials.

9-10.3.4.1.6. Crimp Tool. A crimp tool is provided to crimp wire repair segments and assorted splices.

9-10.3.4.1.7. Electrician's Knife. General purpose multi-use tool.

9-10.3.4.1.8. Cable Ties and Teflon Tape. Used to secure wire splice insulation, wiring and wire bundles.

9-10.3.4.1.9. Flashlight and Illuminated Magnifying Glass . Used in wire identification and work in reduced light levels.

9-10.3.4.1.10. Diagonal Pliers. Used as a general purpose cutter for cables, tie wraps, and string ties.

9-10.3.4.1.11. Wire Cutter. Used to cut wire ends during splicing operations.

9-10.3.4.2. Use. Before using the kit's components, a working knowledge of the kit's test equipment, tools, repair materials, and instruction and content description charts is required. The environmentally protected data sheets provide instructions for the use of the kit's DMM, tools and repair materials, and content description charts. These instructions are used to make emergency wiring repairs. Proficiency in the use and application of this material is necessary to achieve emergency wire repair capability.

9-10.3.4.3. Procedures. The following procedures are typical when performing emergency wire repairs

1. Before leaving for downed aircraft site, obtain copies of "flight essential" serviceability tables (as a minimum) for aircraft model to be recovered.
2. At site, perform an assessment of wire to be repaired prior to self-recovery flight of aircraft. Use serviceability tables to determine wires to be repaired.
3. Select necessary tools and materials and make necessary emergency wire repairs.
4. Use Teflon tape to "cap" off severed non-essential wiring. Non-essential wiring repair is deferred until return to an AVIM/AVUM area. 5. Use DMM to verify proper continuity (aircraft non-powered) and voltage levels (aircraft powered).
6. Return DMM, tools, and unused repair materials to proper storage compartment. Verify kits inventory and prevent FOD.
7. After completing all repairs and verifying kit contents, perform standard check-out of aircraft and systems (powered).
8. Fly to an AVIM/AVUM area. This is a one-time flight not to exceed one hour.
9. At AVIM/AVUM area, convert emergency repairs to temporary or permanent status.
10. Perform BDAR assessment of aircraft and make additional necessary repairs.

9-11. ACM/BDR ELECTRICAL WIRING SYSTEM REPAIR DEFINITIONS AND CAPABILITIES.

The ACM/BDR wiring repair set provides for three types of aircraft electrical wiring repairs, classified as permanent, temporary, and emergency.

9-11.1. Permanent Repair. A permanent repair returns the electrical wiring system to full capability, as manufactured with no degradation of any system operating characteristics. No periodic inspection or replacement is required with a permanent repair.

9-11.2. Temporary Repair. A temporary repair returns the electrical wiring system to a reduced level of capacity, with a possible slight reduction of system operational capability. Temporary repairs must be reinspected at 100 flight hours or 30 days, whichever comes first. At this time, a permanent repair will be performed or an extension of use for the temporary repair will be granted.

9-11.3. Emergency Repairs. An emergency repair is performed to enable the recovery of a downed aircraft to an AVIM/AVUM area. Emergency repairs are allowed for a one-time flight not to exceed one hour duration. Most emergency repairs can be easily upgraded to permanent or temporary status at the AVIM/AVUM area.

9-12. SHIELDED CABLE SPLICE REPAIR.

9-12.1. General Information: The repair set provides wire splice capability for 24 to 12 AWG shielded cables rated at 257° F (125° C) or above. Shielded primary wire repair should be accomplished using the techniques described in this paragraph. Care should be exercised to stagger splices. Where possible, splices in adjacent wires in a bundle should be separated by at least one splice length. This may require the use of the pre-made splice segments or locally manufactured jumper wires made from the kit's primary shielded wire stock. Figures 9-7 and 9-8 illustrate the use of the pre-made shielded wire repair segments on shielded primary wires rated at 257° F (125° C) or above. Adherence to the techniques will result in a permanent, environmentally-sealed shielded primary wire splice.

9-12.2. Limitations: None.

9-12.3. Personnel/Time Required:

- 1 person
- 1 hour

9-12.4. Materials/Tools Required:

- Wire repair kit (item 27, App B)

9-12.5. Procedural Steps: (Figure 9-7).

1. Strip dimensions for shielded cable.
2. Slide shield sleeve and inner sealing sleeve onto one of cables in order given.
3. Splice primary wires.
4. Shrink inner sealing sleeve over splice. Use reflector. Temperature setting 900° F (482° C). Keep hot air away from shield sleeve.
5. Center and shrink shield sleeve over splice area, so that solder melts and flows. Shield sleeve braid must overlap cable braid at both ends. Use same reflector and temperature.
6. Record BDR action taken. When mission is complete, as soon as practical, repair equipment/system using standard maintenance procedures.

SHIELDED CABLE SPLICE FOR NO. 26, 24, 22, 20 SHIELDED CABLE RATED 257° F (125° C) OR ABOVE

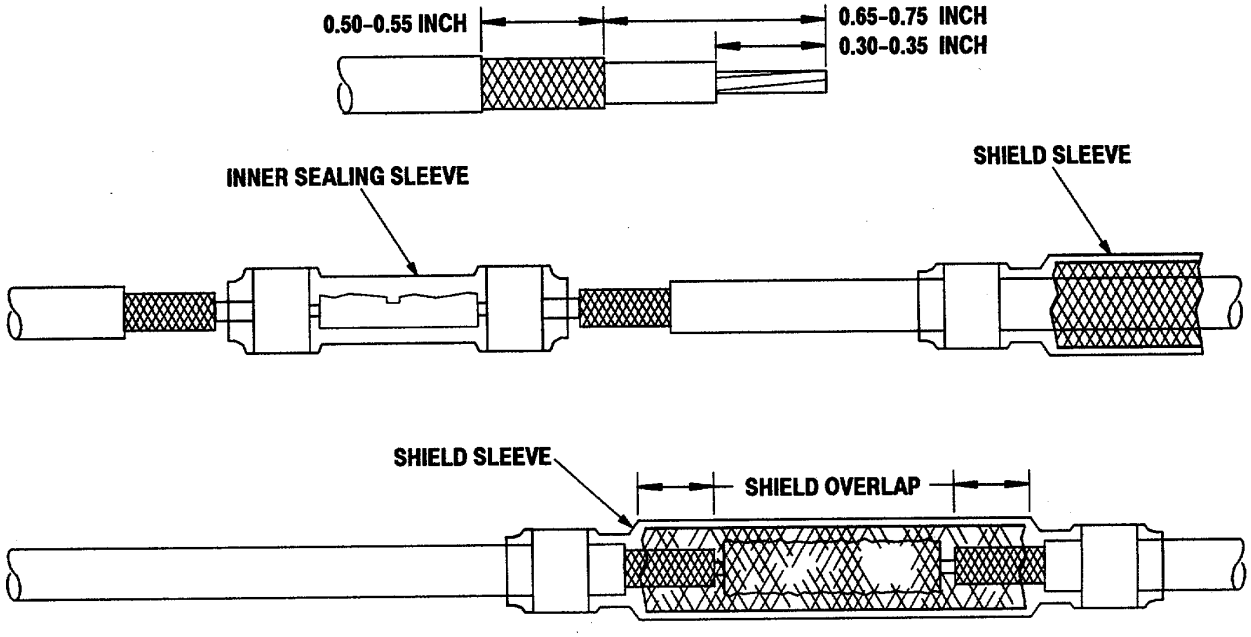

Figure 9-7. Shielded Cable Splice Repair

9-13. SHIELDED CABLE REPAIR SEGMENTS.

9-13.1. Limitations: None.

9-13.2. Personnel/Time Required:

- 1 person
- 1 hour

9-13.3. Materials/Tools Required: * Wire repair kit (item 27, App B)

9-13.4. Procedural Steps: (Figure 9-8).

1. Cut out damaged cable (up to nine inches in length).
2. Strip dimensions for shielded cable and repair segment.
3. Expose one crimp barrel and splice wire at one end.
4. Shrink inner sleeve over splice. Use reflector.
5. Shrink shield sleeve over splice so that solder melts and flows. Shield sleeve braid must overlap cable braid at both ends. Use reflector. Temperature setting 900° F (482° C).
6. Repeat steps 2 thru 5 for other end of repair segment.
7. Record BDR action taken. When mission is complete, as soon as practical, repair equipment/system using standard maintenance procedures.

SHIELDED CABLE REPAIR SEGMENTS

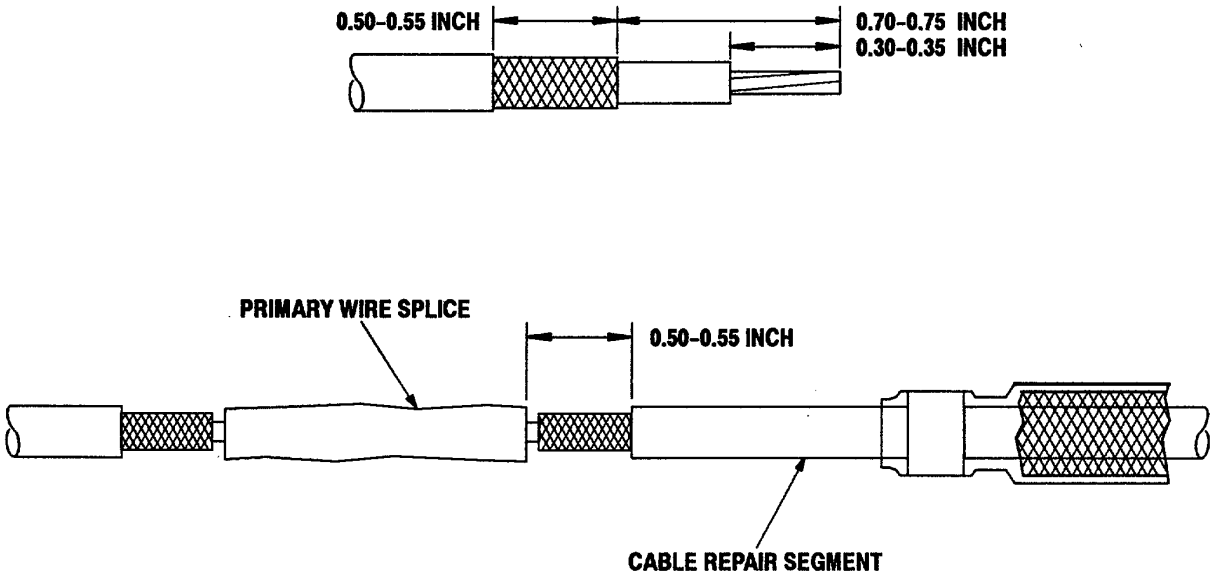

Figure 9-8. Shielded Cable Repair Segments

CHAPTER 10
FUEL SYSTEM

BDAR TM PROCEDURES. THE EXPEDIENT REPAIR PROCEDURES IN BDAR TM ARE FOR USE IN COMBAT ONLY. STANDARD MAINTENANCE/REPAIR PROCEDURES ARE TO BE USED AS SOON THEREAFTER AS POSSIBLE.

SECTION I. INTRODUCTION

10-1. SCOPE.

This chapter contains description, location, serviceability criteria, and cannibalization criteria for the fuel system. Repair of battle damage to the fuel system during combat may be deferrable depending on the damage or component function.

10-2. SYSTEM DESCRIPTION AND LOCATION.

The fuel system consists of the forward and aft fuel cells and the nitrogen inerting subsystem (Figures 10-1 and 10-2). Refer to TM 1-1520-238-T for detailed description and operation of specific fuel system components.

10-2.1. Forward and Aft Fuel Cells. The forward and aft fuel cells consists of the following: fuel quantity transmitters, hoses, and fuel boost pumps. The forward fuel cell is located on the bottom of the aircraft, forward of the ammunition bay. The aft fuel cell is located on the bottom of the aircraft, aft of the ammunition bay.

10-2.2. Nitrogen Inerting Subsystem. The nitrogen inerting subsystem consists of the following: hoses, relief valves, check valves, shutoff valves, and nitrogen inerting unit. The nitrogen inerting subsystem is located in the ammunition bay.

10-3. ASSESSMENT PROCEDURE.

The components of the fuel system are susceptible to ballistic damage or operationally induced damage. Assess damage to determine if repair or cannibalization is necessary. Types of major damage that may be encountered during assessment are gouges, nicks, holes, bends, distortions, creases, and dents.

10-4. SERVICEABILITY CRITERIA.

Serviceability criteria provides each fuel subsystem with general and specific criteria. When a structural component is damaged and the serviceability criteria for the specific type of damage is not presented, inspection criteria shall be utilized. When a non-structural component is damaged, most instances will result in deferred repair. When any damage is deferred, periodic inspections shall be performed to monitor damage growth. Table 10-1 provides fuel system components expanded combat damage criteria. Table 10-2 provides fuel cell expanded combat damage criteria.

Table 10-1. Fuel System Components Expanded Combat Damage Criteria

Nomenclature	Part Number	Damage Criteria
General Fuel System Components	N/A	Nicks, gouges, and scratches are allowed. Maximum depth of material removed is 0.50 inch without repair. (Note: Leakage of fuel requires repair or replacement of faulty component.)
Pumps, Valves, and Unions	N/A	Nicks, gouges, and scratches are allowed. Maximum depth of material removed is 0.50 inch without repair. (Note: Leakage of fuel requires repair or replacement of faulty component.)
Tubes and Hoses	N/A	Any damage which causes leakage of fuel is not allowed. Repair or replacement of faulty component is mandatory.
		Nicks, gouges, and scratches are allowed. Maximum depth of material removed is 0.020 inch without repair.
		Any scratch or removal of surface finish is allowed.
		Any amount of damage to the fabric braiding on hoses is allowed. If damage to fabric braiding was caused by rubbing, then inspect both rubbing surfaces for damage and correct condition as required.
		Loose, broken, and cracked hose clamps are allowed.
		Scuffed, chafed, or scratched steel braiding is acceptable on hoses, however, cut off or frayed steel braiding is not allowed.
		Tubes with a smooth pinch or dent are acceptable to 50 percent of the tube diameter as long as no sharp creases or scratches are present

NOTE

Damage limits are maximum allowed without repair and blending is not required unless specified. However, damage should be blended out whenever possible.

Table 10-2. Fuel Cell Expanded Combat Damage Criteria

Nomenclature	Part Number	Damage Criteria
Forward Fuel Cell (Figure 10-1, sheet 1)	320-4-44733-101 (Goodyear) or 37832-3 (Amfuel)	Tears, cuts, chafing, and cracks are allowed. Maximum depth of material removed is 0.090 inch for upper cell construction and0.133 inch for lower cell construction (lower 7 inches of fwd cell). (Note: Leakage of fuel requires repair or replacement of fuel cell. If fuel cell has taken a hit and the self-sealant feature has been activated and no fuel leakage exists, fuel cell is acceptable for 100 flight hours or thirty days, whichever comes first.)
Aft Fuel Cell (Figure 10-1, sheet 1)	320-4-44734-101 (Goodyear) or 37833-3 (Amfuel)	Tears, cuts, chafing, and cracks are allowed. Maximum depth of material removed is 0.090 inch for upper cell construction and 0.133 inch for lower cell construction (lower 5 inches of aft cell). (Note: Leakage of fuel requires repair or replacement of fuel cell. If fuel cell has taken a hit and the self-sealant feature has been activated and no fuel leakage exists, fuel cell is acceptable for 100 flight hours or thirty days, whichever comes first.)

10-5. CANNIBALIZATION CRITERIA.

The fuel system components that are considered crucial during combat are identified by the fuel system cannibalization candidates list (Table 10-3). Whenever possible, these components should be cannibalized from other aircraft that are incapable of returning to base or considered unable to fly. This list is a prediction based on evaluations of the components' susceptibility of damage,deferrability, and repairability. This is not an exhaustive list of all components which may be cannibalized. When needed, any component may be cannibalized and used provided it is acceptable using the serviceability criteria provided.

Table 10-3. Fuel System Cannibalization Candidates

Nomenclature	Part Number
Forward Fuel Cell (Figure 10-1, sheet 1)	320-4-44733-101 (Goodyear) or37832-3 (Amfuel)
Aft Fuel Cell (Figure 10-1, sheet 1)	320-4-44734-101 (Goodyear) or 37833-3 (Amfuel)
Nitrogen Inerting Unit (Figure 10-1, sheet 1)	3261029-0101

10-6. REPAIR PROCEDURE INDEX.

Repair Procedure	Para
Fuel Line and Hose Repair	10-8
Fuel Cell Repair	10-11

Refer to TM 55-1500-323-24 for electrical wiring repairs. Refer to TM 1-1520-238-23 for specific fuel system component removal/installation procedures.

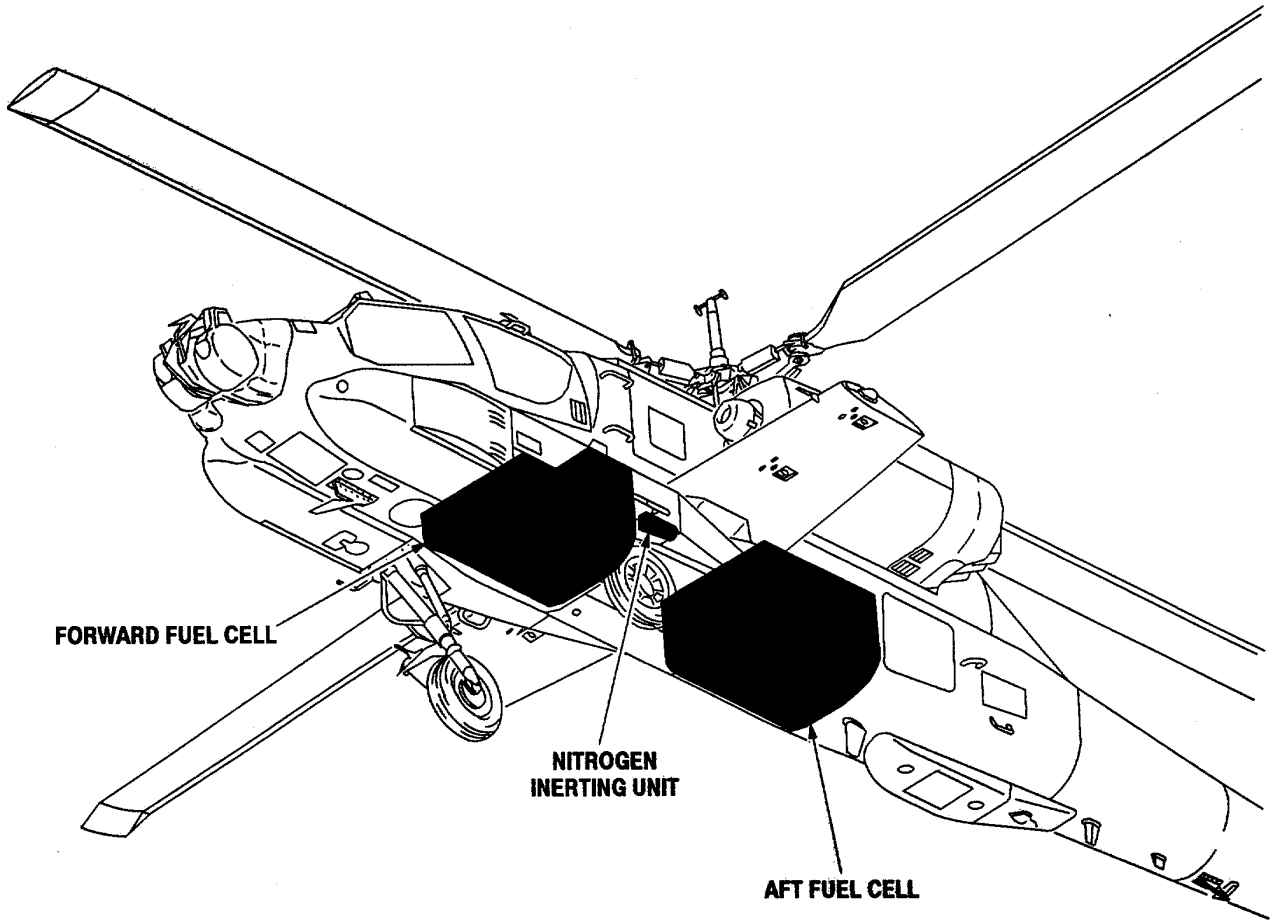

M102-109-1

Figure 10-1. Fuel System Component Location

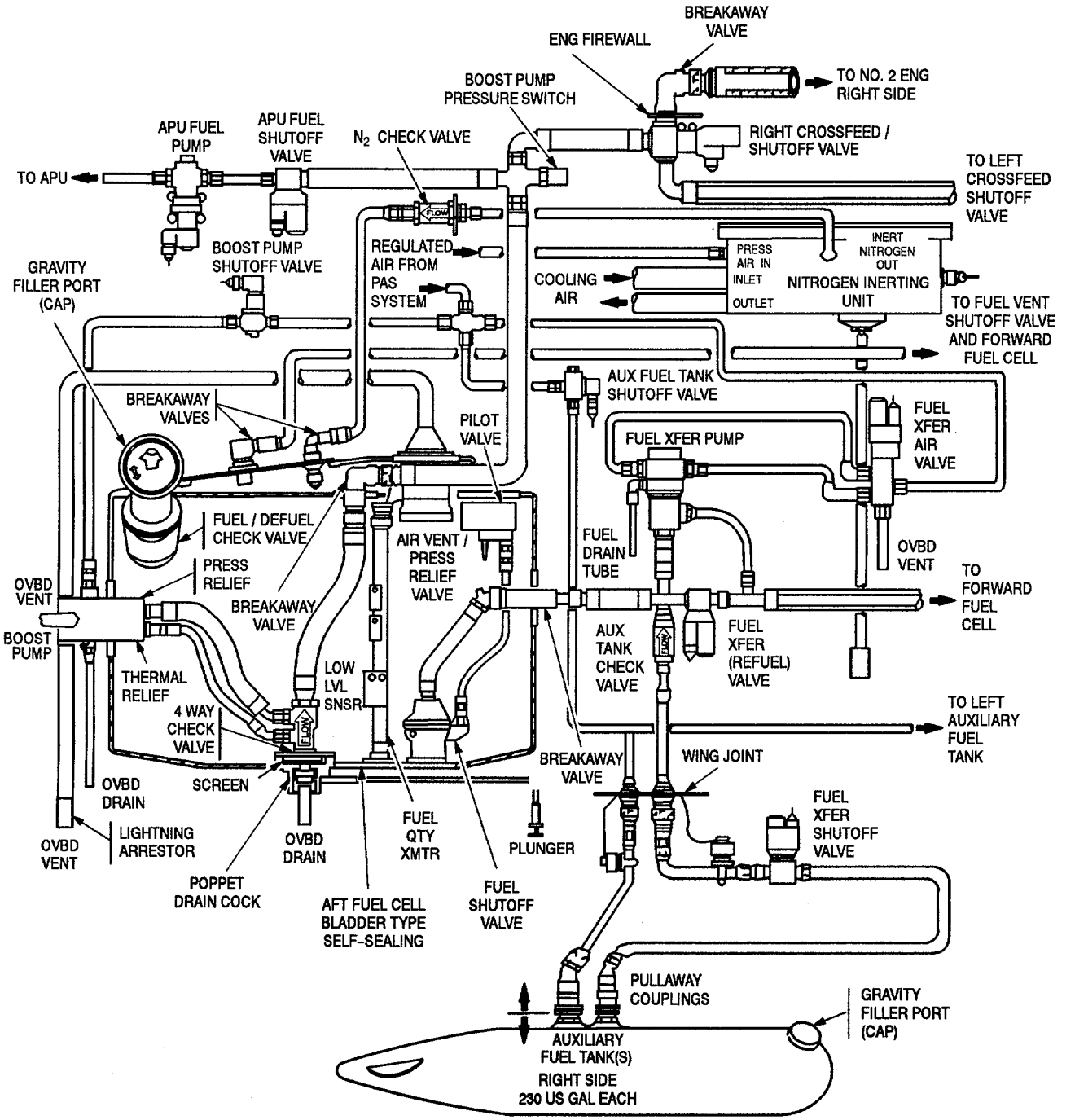

Figure 10-2. Fuel System Functional Diagram (Sheet 1 of 2)

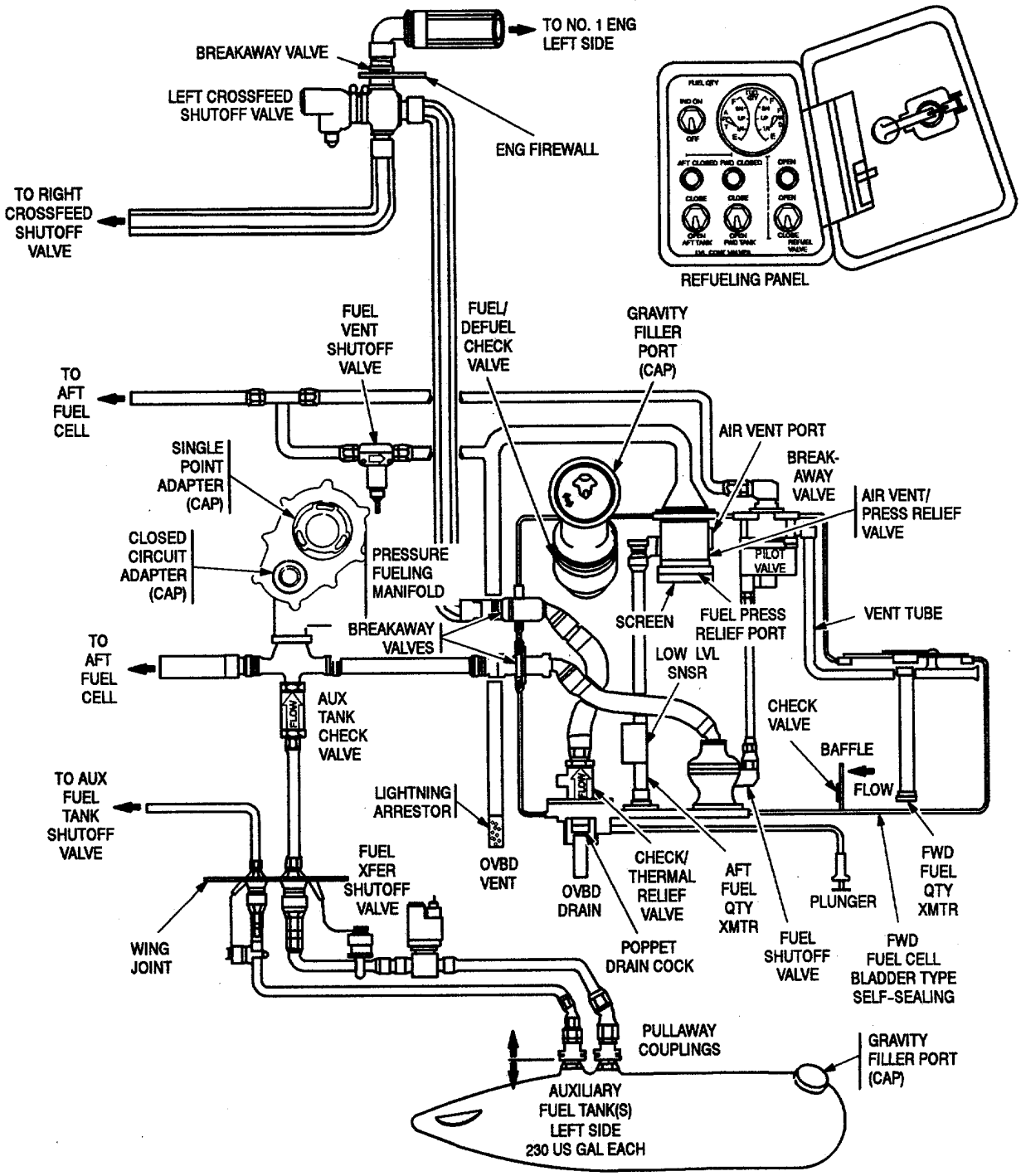

M102-109-3

Figure 10-2. Fuel System Functional Diagram (Sheet 2 of 2)

SECTION II. FUEL LINES AND HOSES

10-7. GENERAL.

Replacement lines and hoses need not be routed along the path of the original installation. They may be routed along any convenient path as long as they do not interfere with personnel or with operating equipment. Long lines and hoses should be clamped to hard supports at convenient intervals not exceeding 24 inches. Repair fuel lines by removing the damaged section. Then install replacement sections with hose assemblies from BDR kit. If hose assemblies are not available in kit, fabricate from rubber hose. Rubber hose should be secured by hose clamps and sealant if proper MS fittings are not available. Damage to lines with wire braid or bellows will be acceptable as long as the affected area does not leak under pressure.

WARNING

Repairs in this chapter are for low pressure tubing such as fuel lines and are not recommended for high pressure tubing such as hydraulic lines.

10-8. FUEL LINE AND HOSE REPAIR.

10-8.1. Option 1: Hose Splice Tubing Repair.

10-8.1.1. Limitations: Inspect after every flight.

10-8.1.2. Personnel/Time Required:

- 1 person
- 1 hour

10-8.1.3. Materials/Tools Required:

- Appropriate quantity and size clamp (item 7, App C), clamp (item 8, App C), clamp (item 9, App C), or clamp (item 10, App C) * Adhesive primer (item 28, App C)
- Sealing compound (item 39, App C)
- Tape (item 59, App C) or wire (item 68, App C)
- Light duty laboratory apron (item 4, App B)
- Tube cutter (item 14, App B)
- Chemical protective gloves (item 19, App B)
- Fluid line repair kit (item 26, App B)
- Adjustable air filtering respirator (item 28, App B)

CAUTION

Adhesives and materials must be compatible with the system fluid.

10-8.1.4. Procedural Steps: (Figure 10-3).

1. Cut out damaged area of tubing.

2. Clean and smooth newly cut ends.
3. Make an improvised bead by wrapping lacing tape or soft wire around tube. (If time permits, coat tape or wire with adhesive or hardening epoxy and let it dry.)
4. Cut piece of hose which fits tightly over tubing and extends 1.5 to 2.0 inches over each end.
5. Apply sealant over both ends of tube. Slip hose over both ends of tube, and secure it with four hose clamps positioned 180 degrees opposite each other.
6. Record BDR action taken. When mission is complete, as soon as practical, repair equipment/system us ing standard maintenance procedures.

10-8.2. Option 2: Patch Metal Tubing.

10-8.2.1. Limitations: Inspect after every flight.

10-8.2.2. Personnel/Time Required:

- 1 person
- 30 minutes

10-8.2.3. Materials/Tools Required:

- Hose (from repair kit) or other patch material
- Appropriate quantity and size clamp (item 7, App C), clamp (item 8, App C), clamp (item 9, App C), or clamp (item 10, App C)
- Tape (item 60, App C) or wire (item 68, App C)
- Chemical protective gloves (item 19, App B)
- Light duty laboratory apron (item 4, App B)
- Fluid line repair kit (item 26, App B)

- Adjustable air filtering respirator (item 28, App B)

10-8.2.4. Procedural Steps: (Figure 10-4).

NOTE

If rubber hose is not available, use a piece of patch material, rubber (piece of inner tube), gasket, or poncho material. If a hose clamp is not available, use tape, lacing wire, or copper wire.

1. Use piece of reinforced hose with inside diameter equal to outside diameter of damaged tube.

2. Split hose lengthwise.
3. Coat inside of hose with sealing compound.
4. Install hose over leak with split opposite leak.
5. Secure hose with at least three clamps, center one directly over leak.
6. Record BDR action taken. When mission is complete, as soon as practical, repair equipment/system using standard maintenance procedures.

10-8.3. Option 3: Replacement of Damaged Hose Section.

10-8.3.1. Limitations: None.

10-8.3.2. Personnel/Time Required:

- 1 person
- 30 Minutes

10-8.3.3. Materials/Tools Required:

- Appropriate quantity and size clamp (item 7, App C), clamp (item 8, App C), clamp (item 9, App C), or clamp (item 10, App C)
- Adhesive primer (item 28, App C)
- Sealing compound (item 39, App C)
- Tape (item 59, App C) or wire (item 68, App C)
- Tape (item 60, App C)
- Tube (item 62, App C) or tube (item 63, App C)
- Light duty laboratory apron (item 4, App B)
- Tube cutter (item 14, App B)
- Chemical protective gloves (item 19, App B)
- Adjustable air filtering respirator (item 28, App B)

10-8.3.4. Procedural Steps: (Figures 10-5 and 10-6).

1. Wrap hose with tape at location of intended cuts.
2. Cut each end of damaged section, take care to make square cut.
3. Clean loose particles from ends of hose, remove tape.
4. Measure distance between cut ends of damaged hose.
5. Select tubing with outside diameter equal to inside diameter of hose and cut length 6.0 inches longer than distance measured in above step.

6. Make an improvised bead by wrapping lacing tape or safety wire around tube (if time permits, coat string or wire with adhesive or hardening epoxy and let it dry).
7. Coat inside of hose with sealing compound.
8. Position tube inside each end of cut hose and secure in place with four clamps.
9. Record BDR action taken. When mission is complete, as soon as practical, repair equipment/system using standard maintenance procedures.

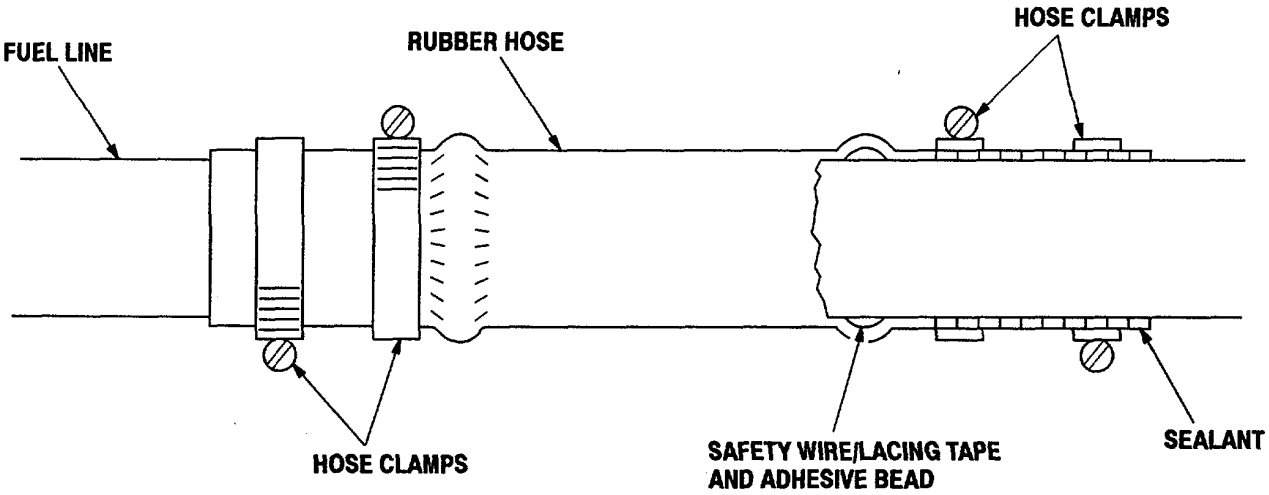

Figure 10-3. Dual Clamp with String Bead Fuel Tubing Repair

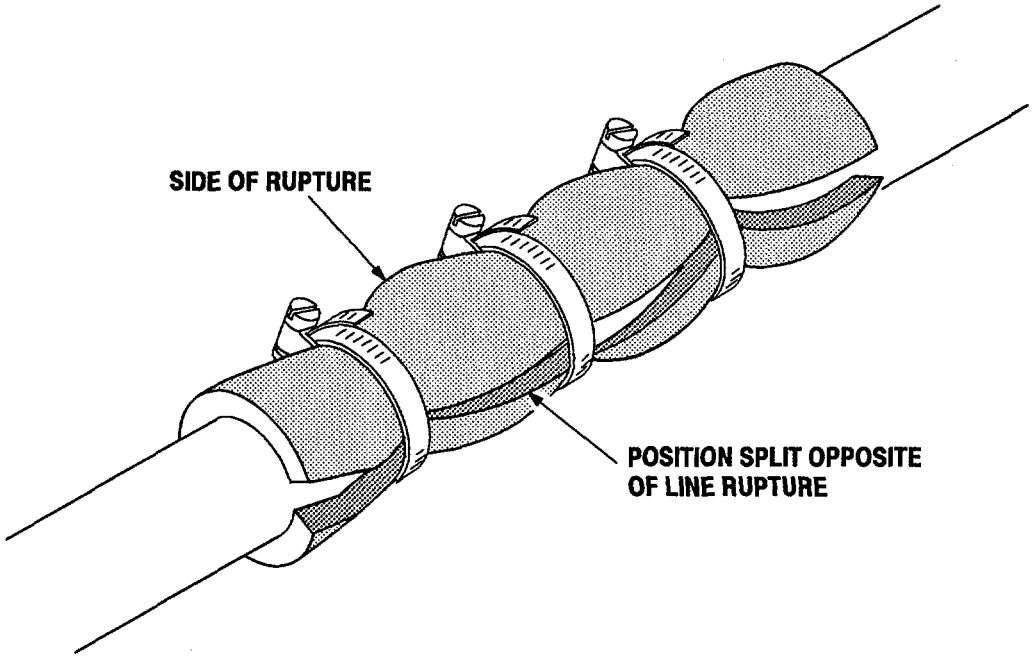

Figure 10-4. Repair of Small Hole in Tube with Hose Patch

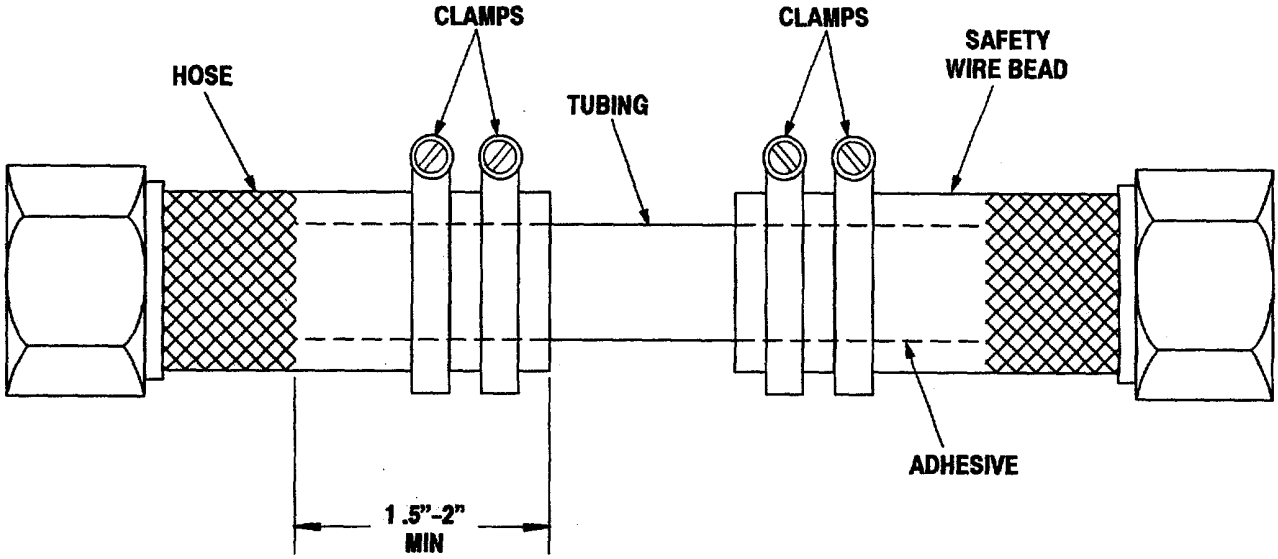

Figure 10-5. Expedient Repair of Damaged Hose

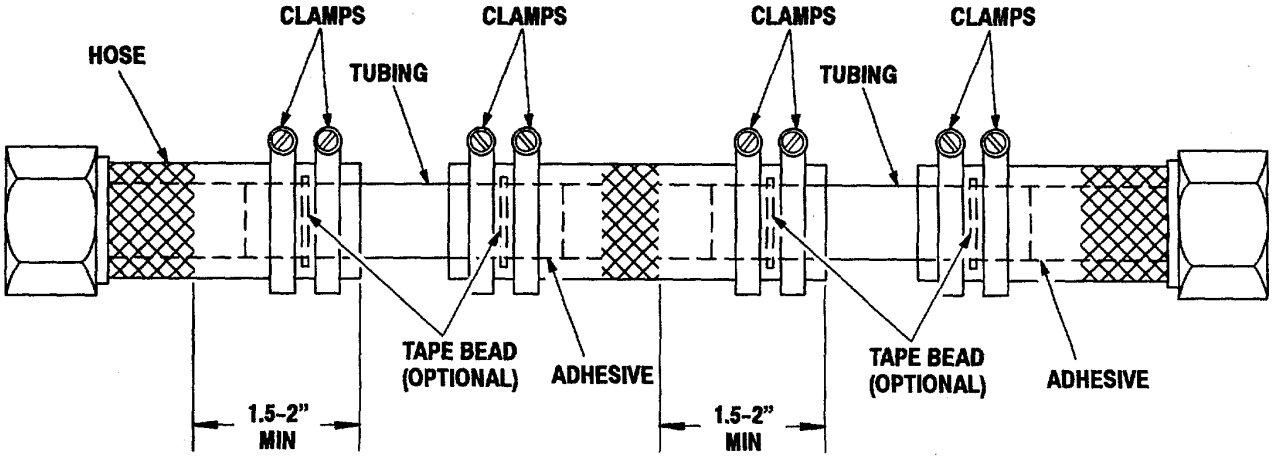

Figure 10-6. Replacement of Damaged Hose Section

SECTION III. FUEL CELL

10-9. GENERAL.

The AH-64A helicopter has self-sealing and crash resistant fuel cells. These cells restrict the catastrophic loss of fuel in survivable crashes. However, the repairs specified will not necessarily return the cells to their original crash resistant level. Self-sealing cells seal by the swelling of the sealant when exposed to fuel. When the projectile penetrates the cell wall, the fuel causes the sealant to swell temporarily closing the wound.

10-10. FUEL CELL DAMAGE REPAIR CRITERIA.

10-10.1. General Information: The combat damage to fuel cells will often be greatly in excess of the damage repair limits. The criteria for BDR fuel cell repair is defined by two types.

10-10.1.1. One-time or Emergency Flight Capability. The purpose of the one-time or emergency capability is to evacuate a badly damaged aircraft to a safe zone or a higher level repair facility.

a. Mechanical clamp repair.
b. Emergency adhesive repair.

NOTE

* For either repair, inspect after each flight. If satisfactory, aircraft can be used for another flight.
* Emergency adhesive repair provides fuel leakage protection only, does not stop fuel activation of self-sealing constructions.

10-10.1.2. 100 Flight Hour/30 Day Capability. The 100 flight hour/30 day capability allows an aircraft to operate at full flight capability although some degradation in certain areas such as crash-worthiness is expected.

10-10.2. Damage Assessment. The battle damage to fuel cells that can be repaired by procedures outlined in this section is limited to that caused by a fully tumbled 0.50 caliber API and smaller projectile. This wound can vary from a puncture to a cut 0.5 inch x 2.0 inches. The projectile will cause an entrance wound but not necessarily an exit. The exit wound will not necessarily be in the direct line of flight from the entrance; it can be deflected by the fuel and/or by striking internal plumbing. There also can be instances where the projectile or shrapnel can cause damage to the inner liner but not exit the cell. Fuel cell damage can be categorized as follows:

10-10.2.1. Non-Repairable Damage.

a. Damage to the metal of the cell fitting which causes fuel leakage.
b. Damage to the cell wall greater than 3 inches in any dimension.

10-10.2.2. Emergency Repairs.

These are repairs that can be accomplished in the allotted time that can allow the aircraft to complete a flight to the next higher echelon maintenance level or to a safer area:

a. Damage in a flat panel area that must be repaired in 15 minutes.
b. Damage to the fitting area within 2.0 inches of the fitting metal or other cell areas for which a one flight capability is required.
c. Repairs capable of 100 flight hours.
d. Wounds through the cell caused by a projectile entering or exiting a flat panel area.
e. Wound in a two plane area.
f. Wound in a three plane area.
g. Wounds to the inner liner.

10-10.3. Accessibility. It is not the intent of this section to detail the steps in gaining access to the fuel cell area to be repaired. This information will be obtained in TM 1-1520-238-23. Repairs can be accomplished from either the interior or exterior of the cell. It will be the responsibility of the damage assessor to specify the method to gain access to the damaged fuel cell.

10-11. FUEL CELL REPAIR.

10-11.1. Personnel/Time Required:

- 2 persons
- 8 - 20 hours

10-11.2. Materials/Tools Required:

- Dry cleaning solvent (item 14, App C)
- Light duty laboratory apron (item 4, App B)
- Chemical protective gloves (item 19, App B)
- A/C fuel tank repair kit (item 24, App B)
- Adjustable air filtering respirator (item 28, App B)

10-11.3. Procedural Steps:

10-11.3.1. Emergency Repair Procedures. Repairs described in this section, when performed as specified, will be adequate for an emergency or one-time flight.

10-11.3.1.1. Mechanical Clamp Repair. When the repair is in a flat panel area and must be accomplished in 15 minutes, the mechanical clamp can be used.

1. Enlarge hole to 0.75 inch x 2.0 inch maximum for 3-inch clamp and 1.0 inch x 3.0 inch maximum for 5-inch clamp.

CAUTION

- Mechanical tightening of wing nut can result in clamp failure. Wing nut will be finger tight and hex nut maximum torque will not exceed 10-12 inch pounds.
- This repair is satisfactory for one flight. Inspection of repair should be made after each flight and if satisfactory can be used for another flight.
- Use care when using knife to prevent enlarging hole too much.

2. Insert bottom plate of clamp through hole and pull up using cord. Position plate so hole is entirely within gasket area. Slip top plate over threaded stud and hand tighten wing nut.
3. Record BDR action taken. When mission is complete, as soon as practical, repair equipment/system using standard maintenance procedures.

10-11.3.1.2. Emergency Adhesive Repair. Emergency adhesive repairs can be accomplished within 2.0 inches of exposed metal of cell fittings and/or damage in other cell areas for a one-time flight only capability requirement.

NOTE

Emergency adhesive repair provides fuel leakage protection only, it does not stop fuel activation of self sealing constructions.

1. Trim only outer exposed damage area to provide a reasonably smooth exterior surface. Do not enlarge hole.

2. Abrade area surrounding damage at least 4.0 inches beyond damage. If available, wipe repair area clean with cleaning solvent.
3. Cut fabric patch to overlap damaged area by a minimum of 1.0 inch all way around. Place patch in cleaning solvent (if available) to soak. (No hole in center of patch is required.)

4. Mix adhesive per kit instructions.

NOTE

- Adhesive can be used at 20° F (-13° C) to 120° F (49° C) but must be warmed to at least 65° F (18° C) to 70° F (21° C) to permit thorough mixing.
- Pot life of adhesive is approximately 25 minutes at 70° F (21° C), less at higher temperatures.

5. Apply adhesive to wound opening and at least 1.5 inches all around damaged area or enough to accept size patch cut in above.
6. Immediately apply fabric patch to damaged area into applied adhesive and smooth out. Apply additional adhesive as required to seal patch to cell and smooth.

CAUTION

Patch will tend to slip when applying additional adhesive and smoothing. Ensure that patch remains centered.

7. Maintain patch position until adhesive sufficiently sets (approximately 30 minutes). Allow adhesive to cure two hours at 70° F (21° C) before refueling aircraft.
8. Record BDR action taken. When mission is complete, as soon as practical, repair equipment/system using standard maintenance procedures.

10-11.3.2. General Repair Procedures. Repairs described in this section, when performed as specified, will be adequate for up to 100 flight hours/30 days. Structure must be removed to obtain access to cell wound.

CAUTION

These repairs will not necessarily restore cell to its original crash-resistant condition.

10-11.3.2.1. Flat Panel Repair.

1. Enlarge wound in cell to no more than 3.0 inches diameter using knife and/or scissors. Remove all frayed fabric and damaged inner liner.

CAUTION

Use care when using knife to prevent enlarging hole too much.

NOTE

If necessary, re-trim frayed fibers with scissors.

2. Abrade inner wall at least 0.5 inch beyond enlarged hole. Abrade outer surface to minimum of 2.0 inches around enlarged hole.

3. Clean abraded area using clean shop towels (wet with cleaning solvent if available).
4. Cut fabric patch 4.0 inches in diameter or large enough to extend at least one inch beyond damaged area and add a 0.5 inch hole in center (soak patch in cleaning solvent if available).

5. Mix adhesive per kit instructions.

NOTE

- Adhesive can be used at 20° F (-13° C) to 120° F (49° C) but must be warmed to at least 65° F (18° C) to 70° F (21° C) to permit thorough mixing.
- Pot life of adhesive is approximately 25 minutes at 70° F (21° C), less at higher temperatures.

6. Apply adhesive to inner liner by using finger to swab adhesive around wound. Apply adhesive to concaved surface of rubber plug (this is surface cord is attached to).

NOTE

Use adhesive as required, retain some for finishing outside of cell repair.

7. Fold rubber plug and insert through hole in cell.

NOTE

Hold cord to prevent loss of plug in cell.

8. Pull plug into position and rotate in position to smooth out adhesive interface. Center plug in wound.
9. Apply layer of adhesive 4.0 inches diameter around wound on outside and fill wound with adhesive.

NOTE

Ensure minimum 0.5 inch bond exists around hole.

10. Apply fabric patch to outside surface by passing cord through hole in patch and position patch over wound. Smooth patch into adhesive.
11. Pull cord and tape to structure keeping a slight tension.
12. Do not disturb repair for minimum of 30 minutes and let cure two hours before refueling. Plug stem may be cut off without disturbing repair after adhesive has cured.
13. Record BDR action taken. When mission is complete, as soon as practical, repair equipment/system using standard maintenance procedures.

10-11.3.2.2. Two Plane Repair. Damage to a two plane area will be repaired in the same manner as flat panel repair in paragraph 10-11.3.2.1 except the hole should not be enlarged to more than 0.5 inch x 2.5 inch.

10-11.3.2.3. Three Plane Repair. The rubber plug will be cut in five equally spaced pie cuts. The pie cuts will be 0.375 inch wide x 1.25 inches long (Figure 10-7). This will allow the plug to assume the contour of the cell when pulled into place. The wound should not be enlarged more than 0.5 inch x 2.25 inches. The repair procedure is identical to flat panel repair in paragraph 10-11.3.2.1.

10-11.3.2.4. Damaged Inner liner. Often a projectile will break up and/or carry shrapnel into the cell. This can damage the inner liner without exiting the cell. If on examination these areas are noted and can be repaired, the life of the cell will be extended. The repair is accomplished by coating the damaged area with a generous layer of repair adhesive and allowed to cure two hours before refueling. The normal abrading and solvent wash should be accomplished prior to the application of the adhesive.

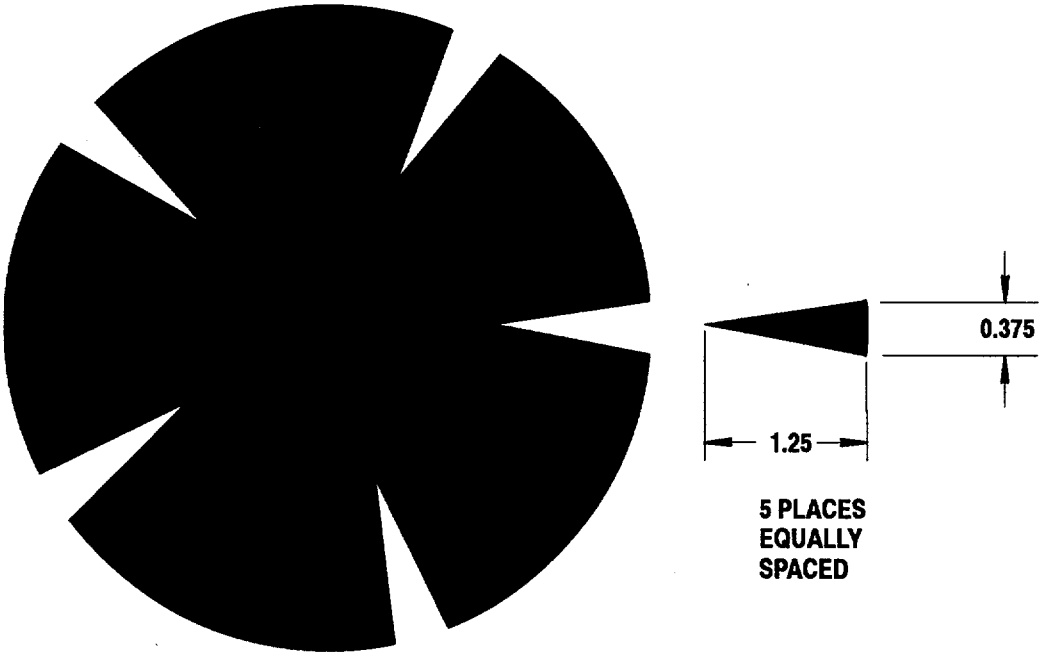

Figure 10-7. Plug Modification for Three Plane Repair

SECTION IV. EXTERNAL FUEL TANK

10-12. GENERAL.
The repairable damage to the external fuel tanks is limited to that caused by straight-in 0.50 caliber API and smaller projectiles.

10-13. EXTERNAL FUEL TANK REPAIR.

10-13.1. Option 1: Flat Panel Repair. To perform the repair will require equipment to cut the fiberglass shell. There is no equipment in the fuel tank repair kit to accomplish this task. Cutting tools may be obtained from fiberglass rotor blade repair kit or from some other kit.

10-13.1.1. Limitations: Inspect after every flight.

10-13.1.2. Personnel/Time Required:
- 1 persons
- 3 hours

10-13.1.3. Materials/Tools Required:
- Dry cleaning solvent (item 14, App C)
- Light duty laboratory apron (item 4, App B)
- Chemical protective gloves (item 19, App B)
- A/C fuel tank repair kit (item 24, App B)
- Adjustable air filtering respirator (item 28, App B)

10-13.1.4. Procedural Steps:

1. Enlarge damaged area completely through tank shell to a maximum of 2.0 inches diameter. Use center of damaged area as center of enlarged hole.

CAUTION

Use extreme care to prevent further damage to fuel tank while enlarging hole in shell.

2. Feel inside tank through hole, to determine whether innerliner has been damaged beyond a 2.0 inch diameter hole. If damage is beyond edge of hole, do not attempt any further repair.
3. Repair using flat panel repair in paragraph 10-11.3.2.1.
4. Record BDR action taken. When mission is complete, as soon as practical, repair equipment/system using standard maintenance procedures.

10-13.2. Option 2: Quick-Fix Plug Repair. If damage is small and clean, a repair screw and washer assembly can be used to repair small arms damage.

10-13.2.1. Limitations: Inspect after every flight.

10-13.2.2. Personnel/Time Required:
- 1 persons
- 5 minutes

10-13.2.3. Materials/Tools Required:
- Fuel tank parts kit (item 17, App C)

10-13.2.4. Procedural Steps:

1. Insert repair screw and washer assembly in hole and tighten snugly.
2. Record BDR action taken. When mission is complete, as soon as practical, repair equipment/system using standard maintenance procedures.

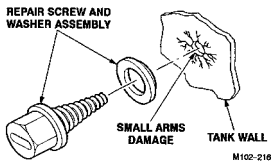

Figure 10-8. Quick-Fix Plug Repair

CHAPTER 11
FLIGHT CONTROL SYSTEM

BDAR TM PROCEDURES. THE EXPEDIENT REPAIR PROCEDURES IN BDAR TM ARE FOR USE IN COMBAT ONLY. STANDARD MAINTENANCE/REPAIR PROCEDURES ARE TO BE USED AS SOON THEREAFTER AS POSSIBLE.

SECTION I. INTRODUCTION

11-1. SCOPE.
This chapter contains description, location, serviceability criteria, and cannibalization criteria for the flight control system. Repair of battle damage to the flight control system during combat may be deferrable depending on the damage or component function.

11-2. SYSTEM DESCRIPTION AND LOCATION.
The flight control system consists of the main rotor flight control subsystem and the tail rotor flight control subsystem. Refer to TM 1-1520-238-T for detailed description and operation of specific flight control system components.

11-2.1. Main Rotor Flight Control Subsystem (Figures 11-1 thru 11-3). The main rotor flight control subsystem consists of three separate inputs from either the pilot or CPG. The lateral, longitudinal, and collective inputs each have separate action to the main rotor flight control system. The components which mechanically operate the main rotor flight controls are similar for each input. The main rotor flight control subsystem consists of the following: pilot and CPG cyclic control sticks, pilot and CPG collective control sticks, Shear Pin Activated Decouplers (SPAD), Linear Variable Differential Transducers (LVDT), control rods, bellcranks, mixer assembly, swashplate assembly, pitch links, and the scissors assembly. These components are located between various areas of the aircraft, starting with the CPG input controls at F.S. 80 and the pilot input controls at F.S. 135 to the swashplate assembly under the main rotor head assembly at F.S. 200.

11-2.2. Tail Rotor Flight Control Subsystem (Figure 11-4). The tail rotor flight control system components are similar to those of the main rotor flight control system. The tail rotor flight control subsystem consists of the following: pilot and CPG foot pedals, SPADs, LVDTs, control rods, bellcranks, swashplate assembly, drive links, and pitch links. These components are located between various areas of the aircraft, starting with the CPG input controls at F.S. 60 and the pilot input controls at F.S. 115 to the swashplate assembly at the tail rotor head assembly at F.S. 559.

11-3. ASSESSMENT PROCEDURE.
The components of the flight control system are susceptible to ballistic damage or operationally induced damage. Assess damage to determine if repair or cannibalization is necessary. Types of major damage that may be encountered during assessment are gouges, nicks, holes, bends, distortions, creases, and dents.

11-4. SERVICEABILITY CRITERIA.
Serviceability criteria provides each flight control subsystem with general and specific criteria. When a structural component is damaged and the serviceability criteria for the specific type of damage is not presented, TM 1-1520-238-23 inspection criteria shall be utilized. When a non-structural component is damaged, most instances will result in deferred repair. When any damage is deferred, periodic inspections shall be performed to monitor damage growth.

11-4.1. Flight Control System General Serviceability Criteria.

a. Corrosion is allowed to be a maximum of 50 percent of the component area and a depth no greater than the nicks, gouges, and scratches limits listed for those components.

b. Threads which are stripped are allowed, provided a minimum of five threads are engaged.

c. Scratches where paint has been removed are allowed.

11-4.2. Flight Control System Specific Serviceability Criteria.

a. Table 11-1 provides flight control system components expanded combat damage criteria.

Table 11-1. Flight Control System Components Expanded Combat Damage Criteria

Nomenclature	Part Number	Damage Criteria
Control Rods	N/A	Straightness must be within 40 percent of tube diameter. Dents are not to exceed 0.020 inch in depth and three times rod diameter in length. Scratches or abrasions are not to exceed 0.010 inch in depth after blending. Scratches and gouges are not to exceed 50 percent of the rod circumference.
	7-211524001-9	Straightness must be within 40 percent of tube diameter. Dents are not to exceed 0.020 inch in depth and three times rod diameter in length. Scratches or abrasions are not to exceed 0.12 inch in depth after blending. Scratches and gouges are not to exceed 50 percent of the rod circumference.
Main Rotor Scissors Assembly (Figure 11-3) Lower Scissor Arm	7-311511158-3 7-311511158-5 7-311511161	Maximum axial play of 0.030 inch. Maximum radial play of 0.010 inch. Scratches or abrasions are not to exceed 0.050 inch in depth.

Table 11-1. Flight Control System Components Expanded Combat Damage Criteria - Cont

Nomenclature	Part Number	Damage Criteria
Bushings and Bearings	N/A	Maximum radial play with bolt in bushing or bearing inside diameter - 0.008 inch. Maximum radial play with sliding bushing in flanged inside diameter - 0.008 inch. Maximum radial play in ball bearing - 0.004 inch. Maximum radial play in control rod end bearing - 0.004 inch. Maximum axial play in control rod end bearing 0.018 inch. Maximum radial play in servocylinder universal link bushing - 0.010 inch. Maximum axial play in servocylinder universal link bushing - 0.018 inch. Maximum radial play in servocylinder rod end bearing and clevis bearing - 0.009 inch. Maximum axial play in servocylinder rod end bearing and clevis bearing - 0.030 inch.
Main Rotor Pitch Link (Figure 11-3)	7-311511135-5	Maximum axial play of 0.030 inch. Maximum radial play of 0.017 inch. Scratches and gouges are not to exceed 0.105 inch in depth at minimum cross section after blending. This includes shank and exposed threads.
Tail Rotor Pitch Link (Figure 11-4, sheet 2)	7-311527035-31 7-311527035-41	Spherical bearing (7-211527014) (large bearing): Maximum axial play of 0.030 inch. Maximum radial play of 0.017 inch. Bearing (HS4736KR6CWGH) (small bearing): Maximum axial play of 0.014 inch. Maximum radial play of 0.010 inch.
Main Rotor Swashplate (Rotating/Non-Rotating) (Figure 11-3)	7-311511101-17 (7-311511107/ 7-311511102)	Spherical bearing (7-211511109-3): Maximum axial play of 0.075 inch. Maximum radial play of 0.020 inch. Annular Ball bearing (7-311511103-5): Maximum axial play of 0.005 inch. Maximum radial play of 0.005 inch. Scratches and gouges not to exceed 0.090 inch in depth for non-rotating swashplate and 0.400 inch in depth for rotating swashplate.

Table 11-1. Flight Control System Components Expanded Combat Damage Criteria - Cont

Nomenclature	Part Number	Damage Criteria
Main Rotor Lateral Link (Figure 11-3)	7-311511182-11	Spherical rod end bearings: Maximum axial play of 0.030 inch. Maximum radial play of 0.017 inch. Scratches, gouges, and nicks not to exceed 0.095 inch in depth.
Main Rotor Torque Link (Figure 11-3)	7-311511181	Upper spherical bearing: Maximum axial play of 0.030 inch. Maximum radial play of 0.017 inch. Lower journal bearing: Maximum axial play of 0.010 inch. Maximum radial play of 0.010 inch. Scratches and gouges not to exceed 0.60 inch in depth.
Shear Pin Activated Decoupler (SPAD)	N/A	Maximum hole elongation of 0.005 inch.
Main Rotor Lateral Bellcrank (Figure 11-3)	7-311511123-13	Dents are not allowed to exceed 0.210 inch in depth. Scratches and gouges are not allowed to exceed 0.190 inch in depth.
Main Rotor Forward Longitudinal Bellcrank (Figure 11-3)	7-311511127-5	Dents are not allowed to exceed 0.210 inch in depth. Scratches and gouges are not allowed to exceed 0.210 inch in depth.
Main Rotor Aft Longitudinal Bellcrank (Figure 11-3)	7-311511125-13	Dents are not allowed to exceed 0.140 inch in depth. Scratches and gouges are not allowed to exceed 0.140 inch in depth.
Main Rotor Collective Bellcrank (Figure 11-3)	7-311511117-9	Dents are not allowed to exceed 0.070 inch in depth. Scratches and gouges are not allowed to exceed 0.260 inch in depth.
Deck Attachments (Brackets)	N/A	Dents, scratches, and abrasions are not allowed to exceed 25 percent of area and 25 percent of thickness after removal.

NOTE

Damage limits are maximum allowed without repair and blending is not required unless specified. However, damage should be blended out whenever possible.

11-5. CANNIBALIZATION CRITERIA.

The flight control system components that are considered crucial during combat are identified by the flight control system cannibalization candidates list (Table 11-2). Whenever possible, these components should be cannibalized from other aircraft that are incapable of returning to base or considered unable to fly. This list is a prediction based on evaluations of the components susceptibility of damage, deferrability, and repairability. This is not an exhaustive list of all components which may be cannibalized. When needed, any component may be cannibalized and used provided it is acceptable using the serviceability criteria provided.

Table 11-2. Flight Control System Cannibalization Candidates

Nomenclature	Part Number
Main Rotor Aft Longitudinal Bellcrank Bolt (Figure 11-3)	7-211511209
Main Rotor Swashplate (Figure 11-3)	7-311511101-17
Main Rotor Collective Bellcrank (Figure 11-3)	7-311511117-9
Main Rotor Forward Longitudinal Bellcrank (Figure 11-3)	7-311511127-5
Main Rotor Aft Longitudinal Bellcrank (Figure 11-3)	7-311511125-13
Main Rotor Lateral Bellcrank (Figure 11-3)	7-311511123-13
Horizontal Stabilator Actuator (Figure 11-4)	7-311D10022-9
Main Rotor Scissors Assembly (Figure 11-3)	7-311511158-3 7-311511158-5
Main Rotor Longitudinal Link (Figure 11-3)	7-311511130-5
Tail Rotor Pitch Link (Figure 11-4, sheet 2)	7-311527035-31 7-311527035-41
Main Rotor Pitch Link (Figure 11-3)	7-311511135-5
Tail Rotor Swashplate (Figure 11-4, sheet 2)	7-311527038-15

11-6. REPAIR PROCEDURE INDEX.

Repair Procedure ..... Para
Control Rod Repair..... 11-8

Refer to TM 55-1500-323-24 for electrical wiring repairs. Refer to TM 1-1520-238-23 for specific flight control system component removal/installation procedures.

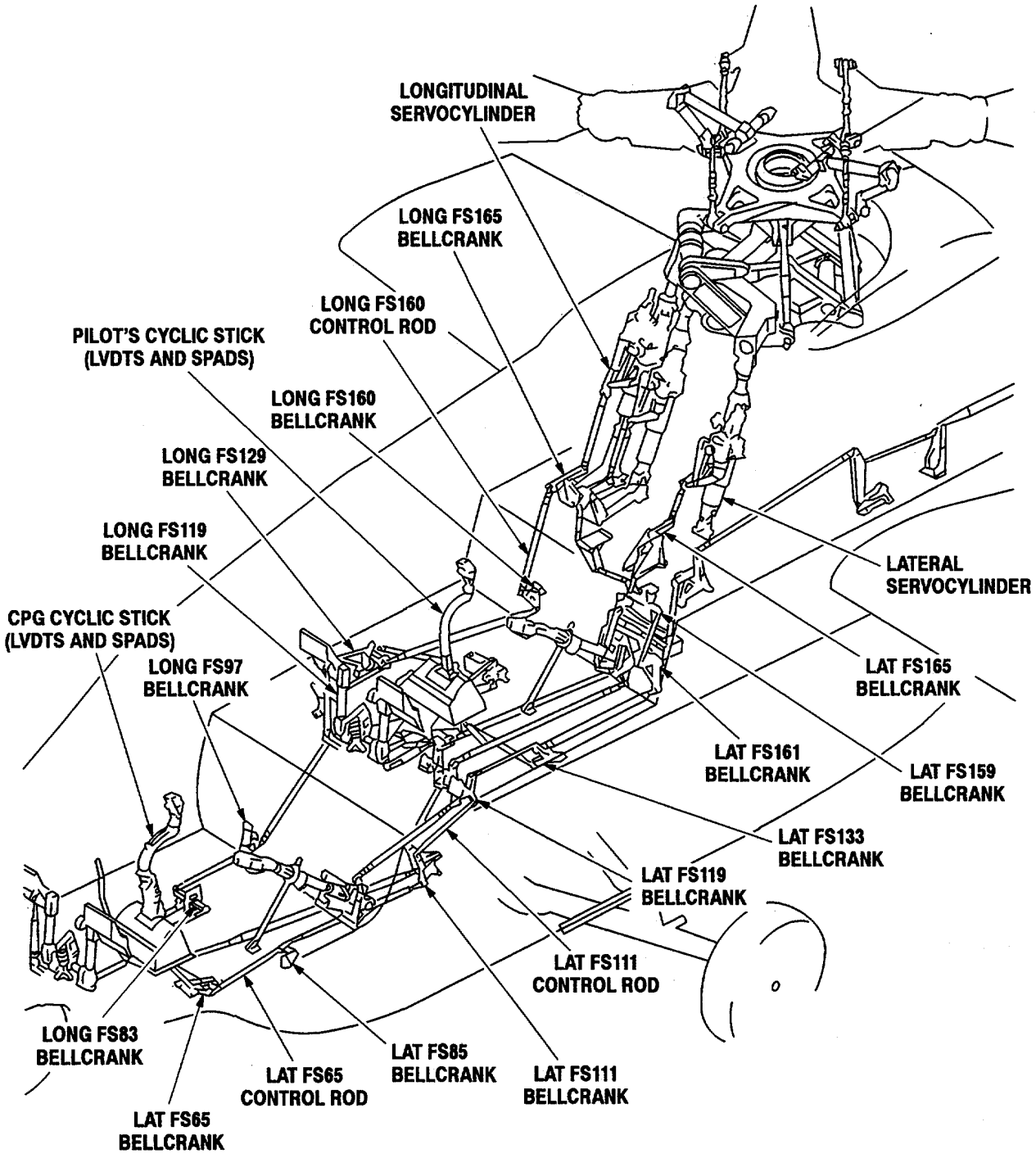

M102-159

Figure 11-1. Main Rotor (Lateral and Longitudinal) Flight Control Subsystem Component Location

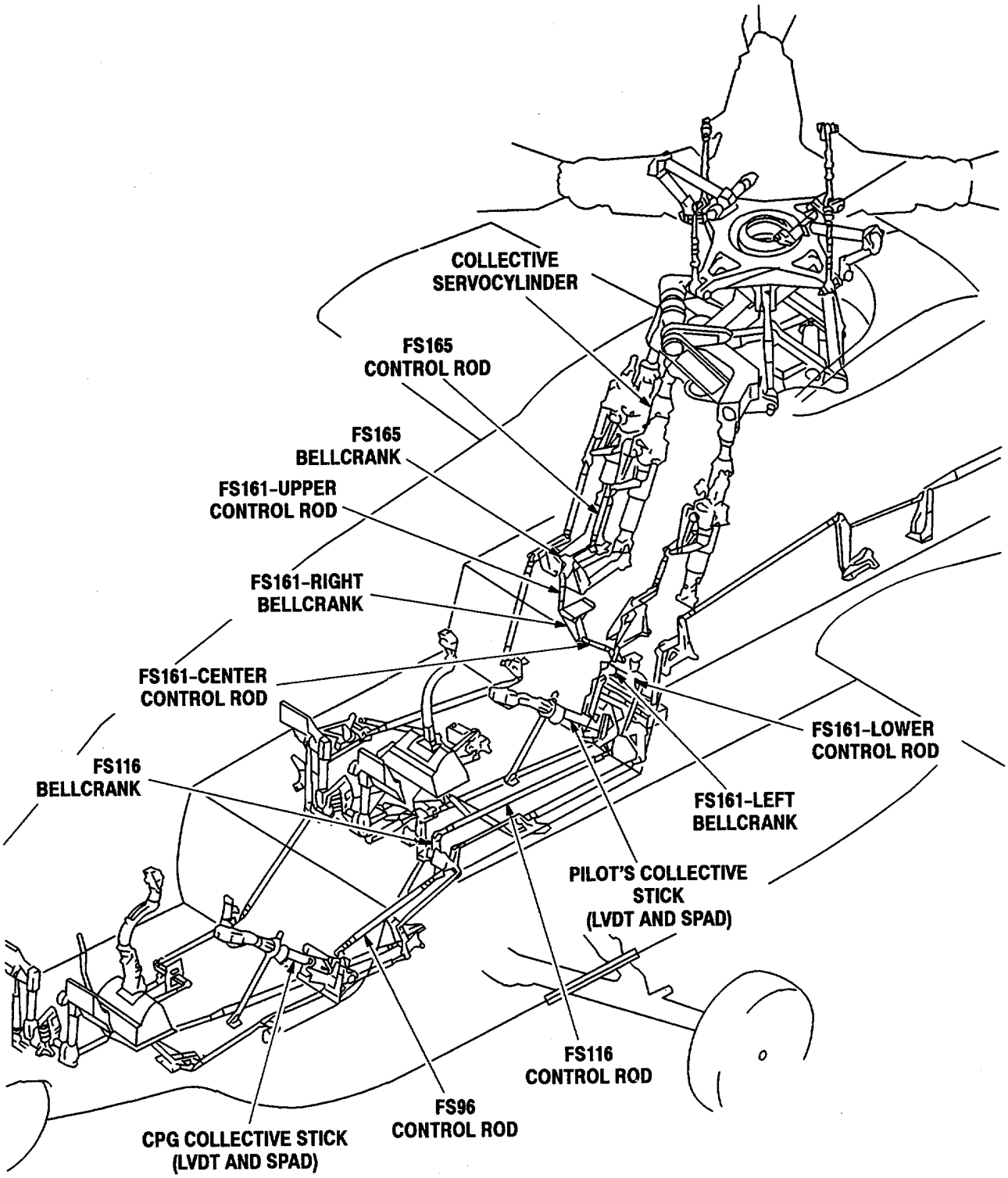

M102-160

Figure 11-2. Main Rotor (Collective) Flight Control Subsystem Component Location

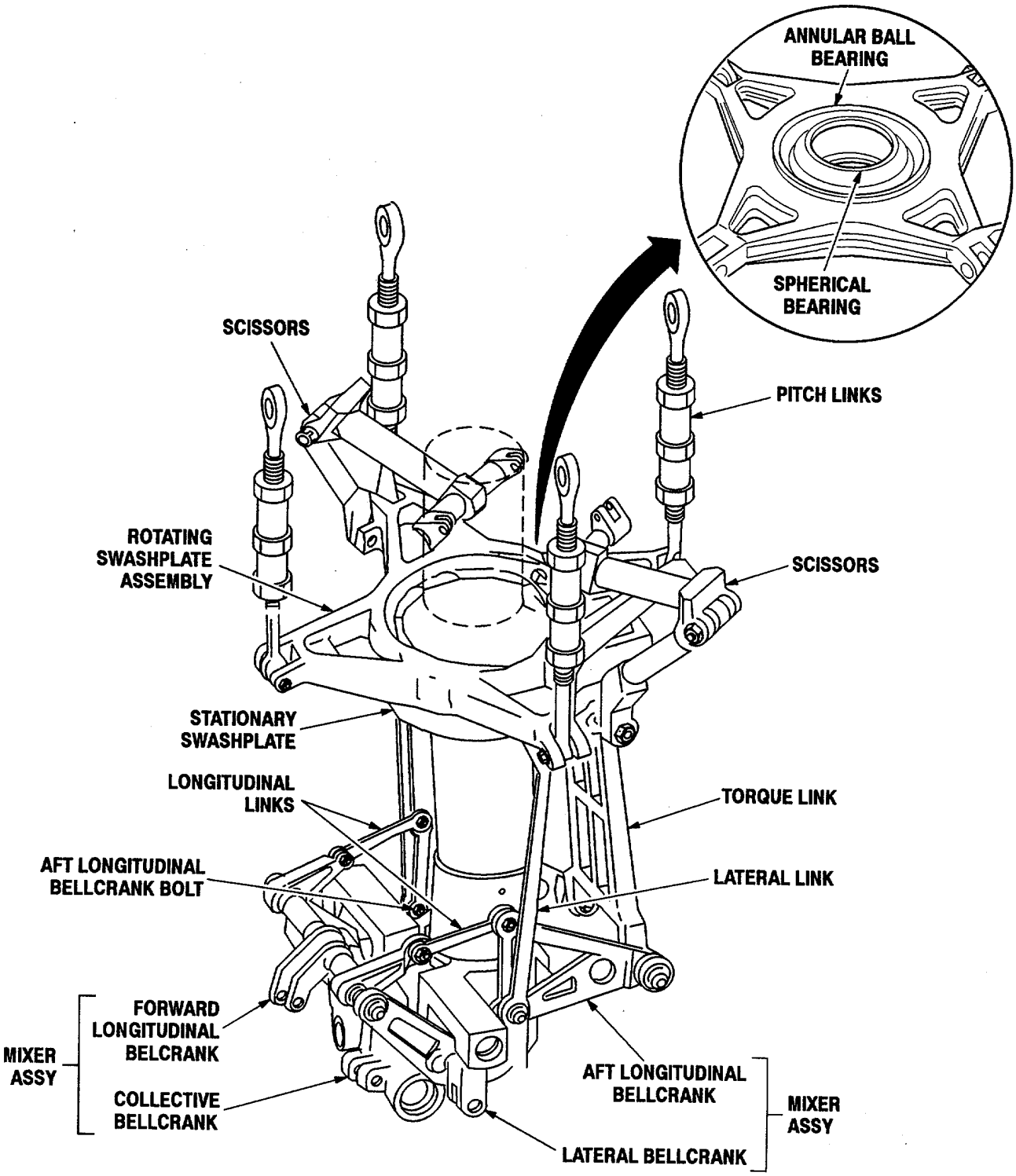

M102-161

Figure 11-3. Upper Flight Controls Component Location

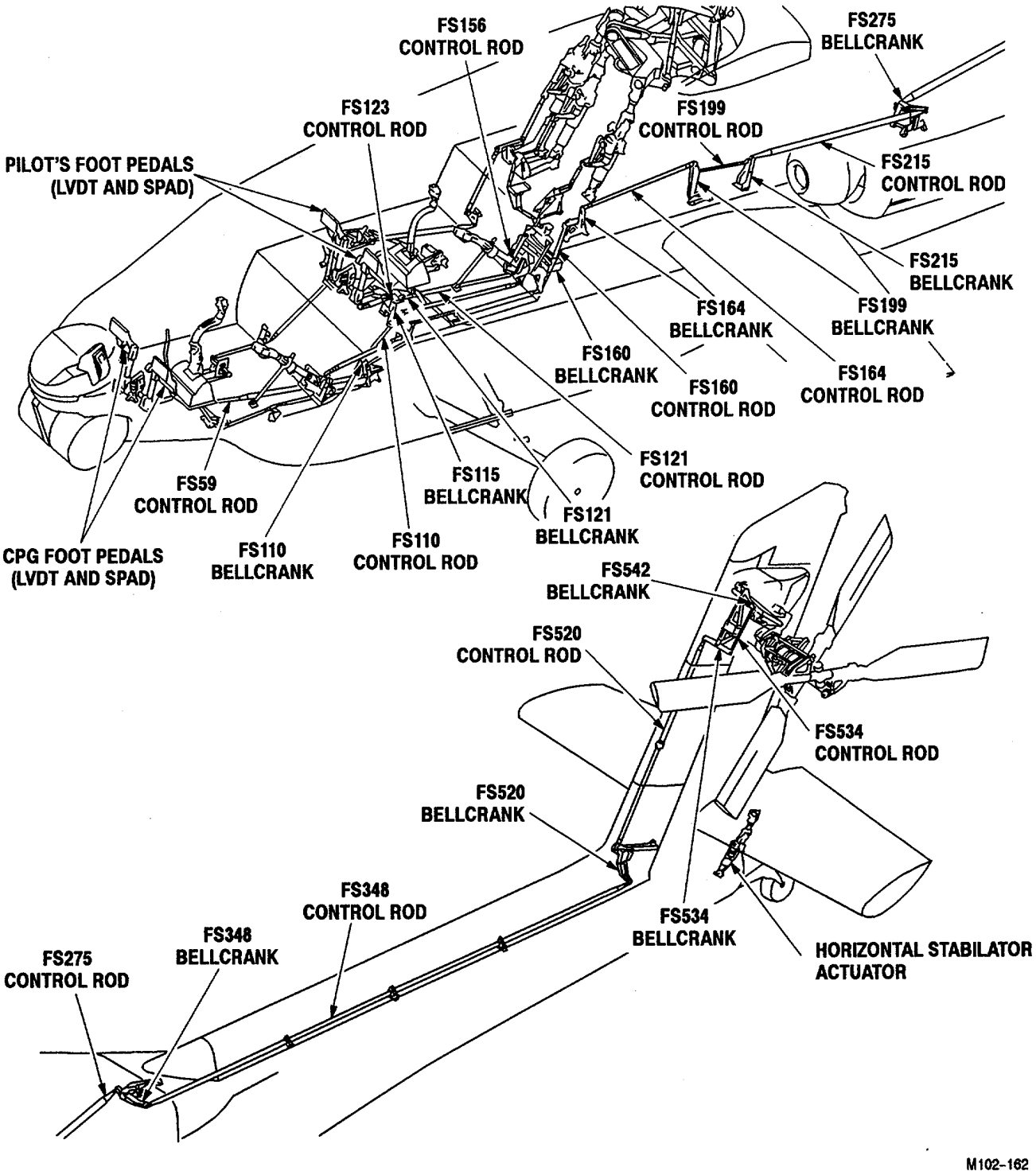

M102-162

Figure 11-4. Tail Rotor (Directional) Flight Control Subsystem Component Location (Sheet 1 of 2)

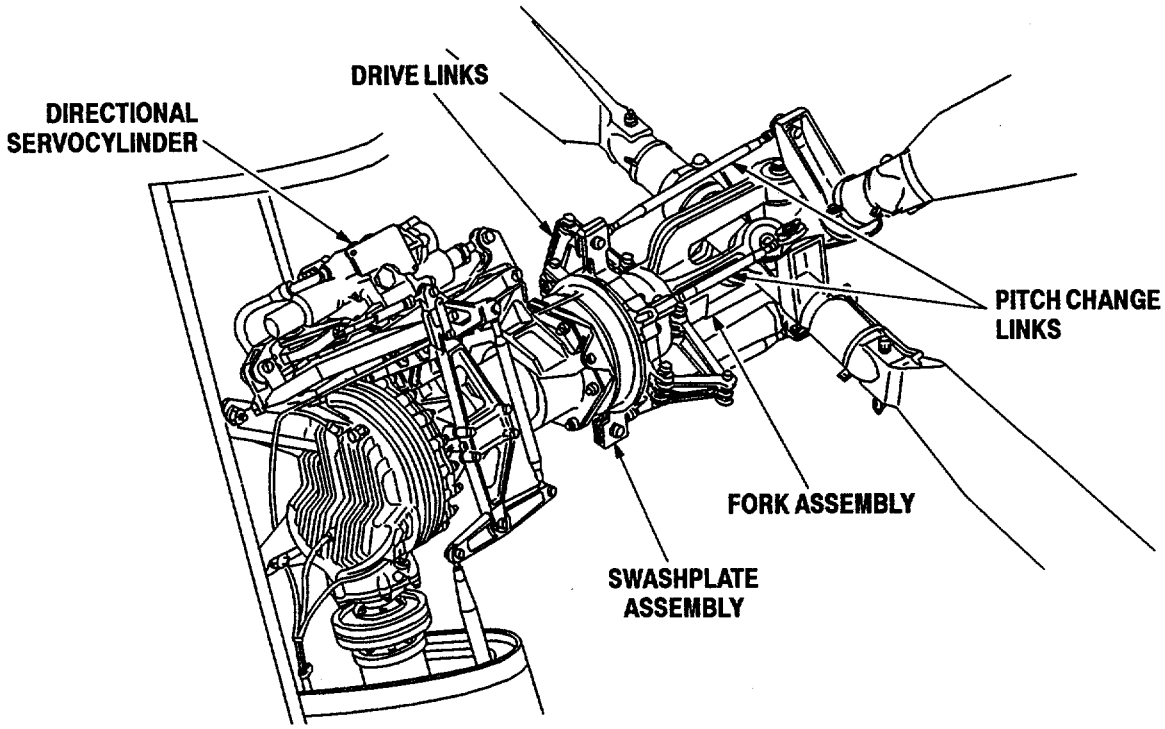

M102-163

Figure 11-4. Tail Rotor (Directional) Flight Control Subsystem Component Location (Sheet 2 of 2)

SECTION II. CONTROL RODS

11-7. GENERAL.

Lightly loaded control rods can be repaired to return to service. In all cases it is preferable to replace a control rod rather than repair. Repairs should be made as a last resort for one-time flight only.

11-8. CONTROL ROD REPAIR.

11-8.1. Option 1: Splice Flight Control Rod or Tube.

11-8.1.1. Limitations: One-time self-recovery flight.

11-8.1.2. Personnel/Time Required:
- 1 person
- 2 hours

11-8.1.3. Materials/Tools Required:
- Refer to Appendix E, Table E-9 for structural fasteners
- Structural angle (item 3, App C), structural angle (item 4, App C), or structural angle (item 5, App C)
- Tube (item 64, App C), tube (item 65, App C), tube (item 66, App C), or tube (item 67, App C)
- 3/8-inch portable pneumatic drill (item 15, App B)
- Airframe repairman's tool kit (item 40, App B)

11-8.1.4. Procedural Steps: (Figures 11-5 and 11-6).

1. If damaged control rod can be measured between both rod ends or clevis eye bolts (center-to-center distance), aircraft flight control system will not need to be put into neutral rig position.
2. If damaged control rod cannot be accurately measured, put aircraft flight control system into neutral rig position (TM 1-1520-238-23).
3. Disconnect and remove damaged control rod from aircraft (TM 1-1520-238-23).
4. Trim damaged area.
5. Using best judgment, select metal splice either inner or outer depending upon availability of materials. Cut repair material long enough to span trimmed rod ends with minimum overlap of 1.5 inches.
6. Drill at least two holes on each end of rod. Hole should go through splicer and damaged rod and should be positioned in cross pattern. Make sure that original center to center length remains same. Install bolt/rivet through holes.
7. Reinstall repaired rod in aircraft and check for binding or interference by manually moving the appropriate controls (TM 1-1520-238-23).
8. Ensure minimum of 0.125 inch clearance between rods and adjacent structure is maintained.
9. Record BDR action taken. When mission is complete, as soon as practical, repair equipment/system using standard maintenance procedures.

11-8.2. Option 2: Fabricate Flight Control Rod/Tube.

11-8.2.1. Limitations: One-time self-recovery flight.

11-8.2.2. Personnel/Time Required:
- 1 person
- 3 hours

11-8.2.3. Materials/Tools Required:
- Tube (item 64, App C), tube (item 65, App C), tube (item 66, App C), or tube (item 67, App C)
- 3/8-inch portable pneumatic drill (item 15, App B)
- Airframe repairman's tool kit (item 40, App B)

11-8.2.4. Procedural Steps: (Figure 11-7).

1. Put aircraft flight control system into neutral rig position (TM 1-1520-238-23).
2. Remove damaged flight control rod (TM 1-1520-238-23).
3. On end that fits into the clevis bolt, flatten tube so that it fits into the arms of bellcrank or clevis. A small amount of clearance between the clevis fork should be allowed.
4. Round off end of flattened tube.
5. Drill hole through tube and install bolt.
6. After determining correct distance between holes, drill hole in tube.
7. On other end where clevis arms would normally fit, flatten tube only enough to fit over bearing assembly with some clearance.
8. Round off end of flattened tube.
9. Inspect tube for cracks or tears.
10. Reinstall fabricated tube in aircraft and check for binding or interference by manually moving appropriate controls (TM 1-1520-238-23).
11. Ensure minimum of 0.125 inch clearance between rods and adjacent structure is maintained.
12. Record BDR action taken. When mission is complete, as soon as practical, repair equipment/system using standard maintenance procedures.

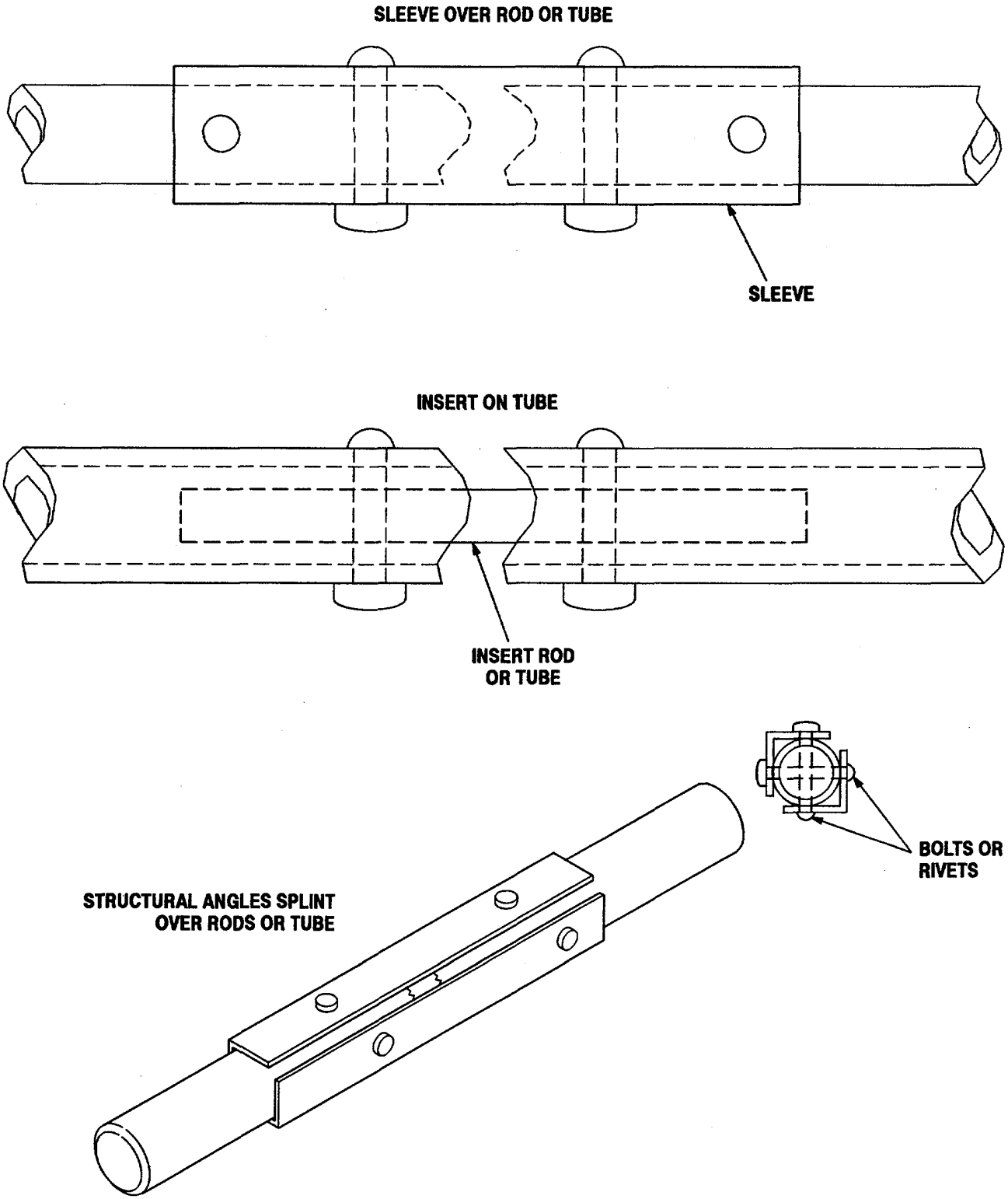

M102-169

Figure 11-5. Control Rod Splice

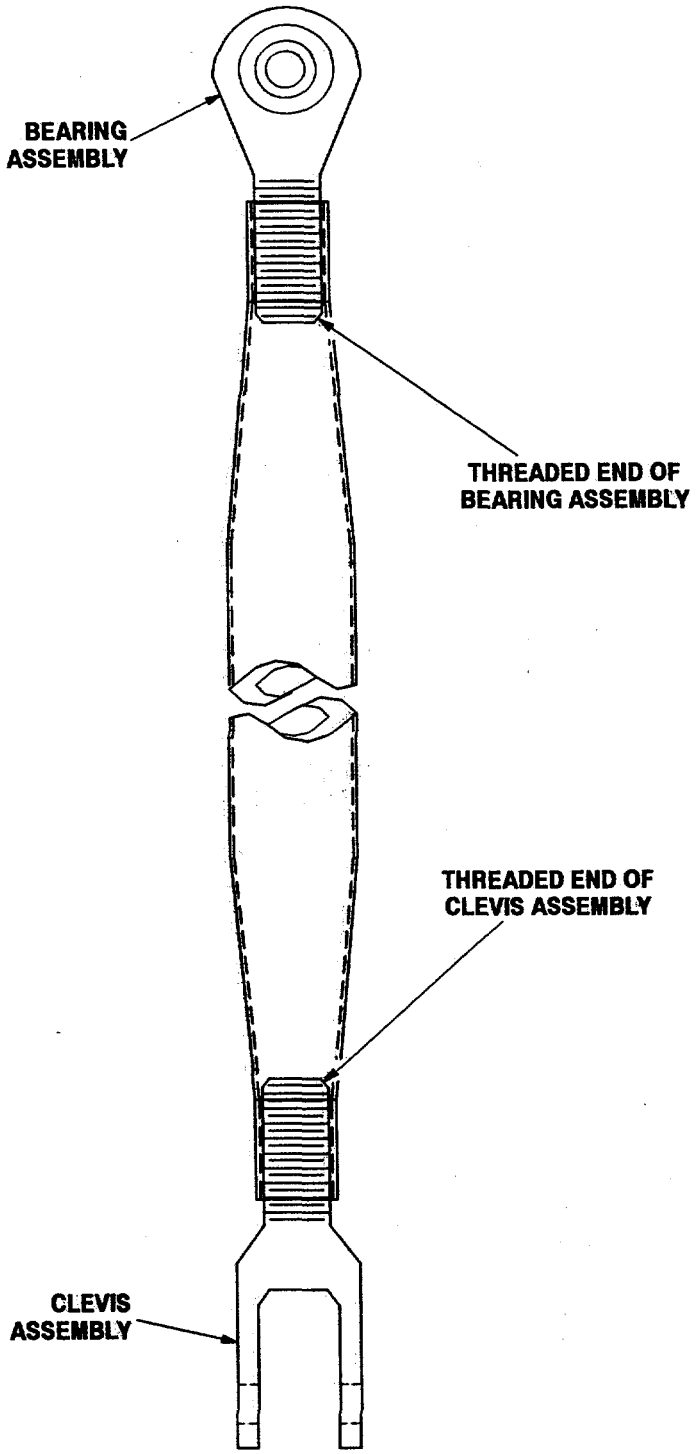

M102-172

Figure 11-6. Control Rod with Bearing and Clevis Assemblies (Sheet 1 of 2)

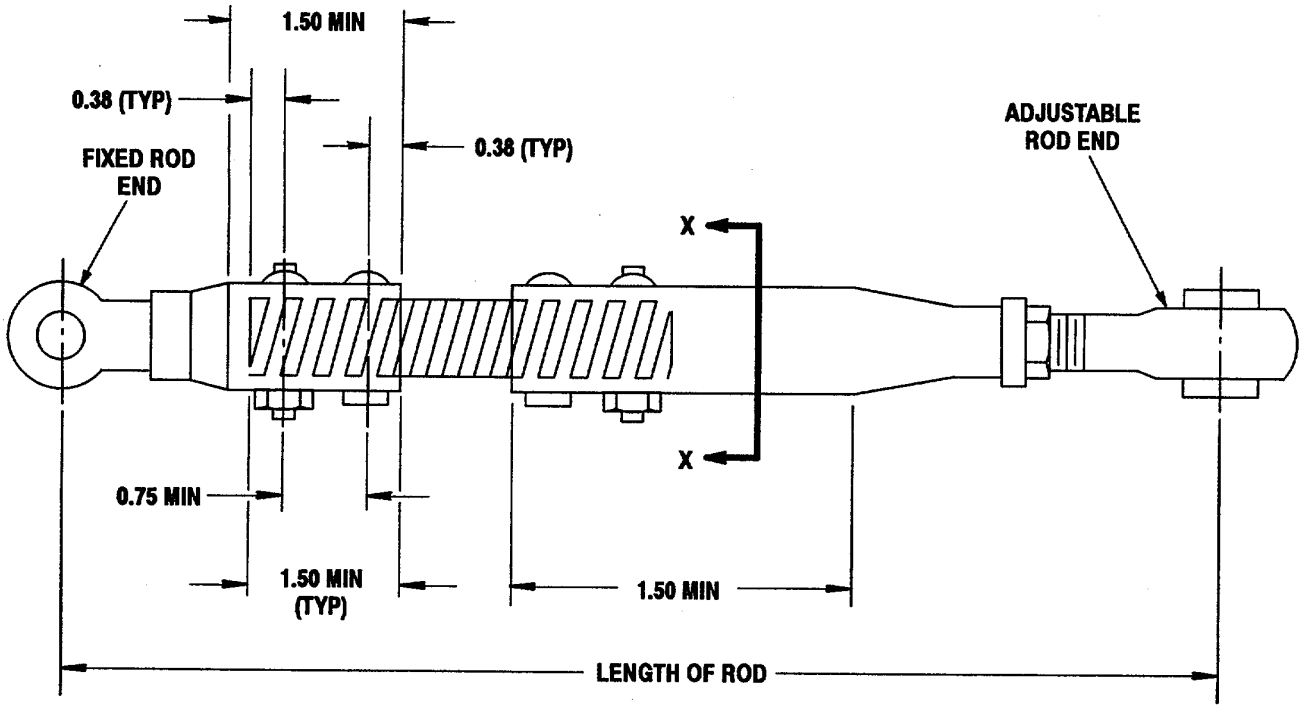

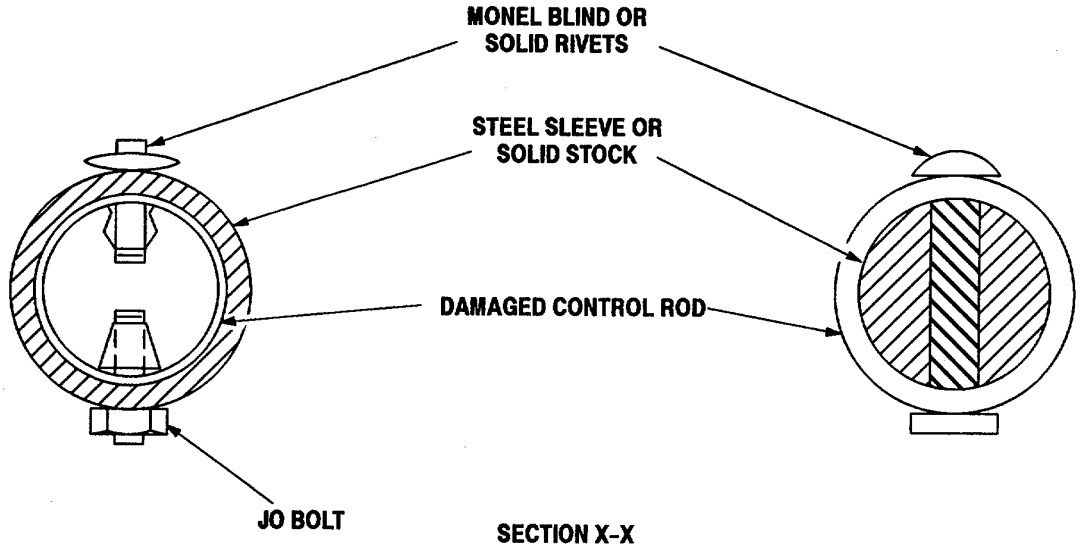

M102-168

Figure 11-6. Control Rod with Bearing and Clevis Assemblies (Sheet 2 of 2)

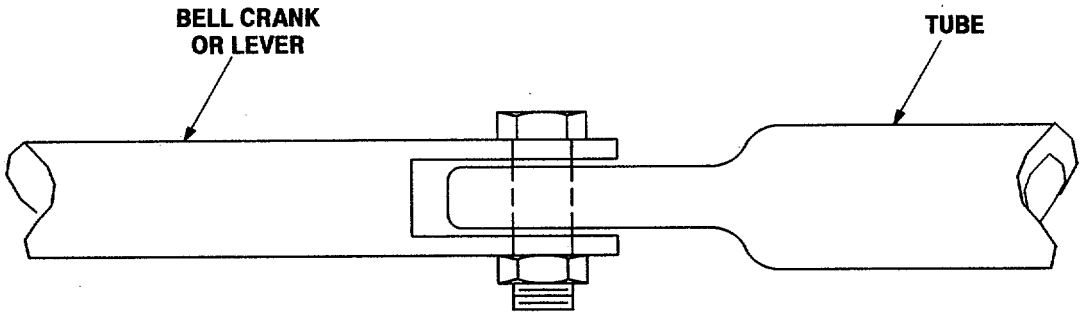

FLATTENED END OF FABRICATED FLIGHT CONTROL

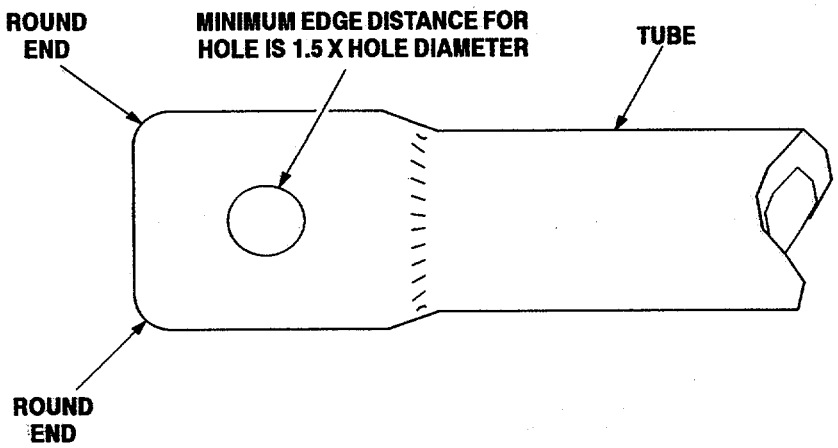

CORNER ROUNDING ON FABRICATED FLIGHT CONTROL

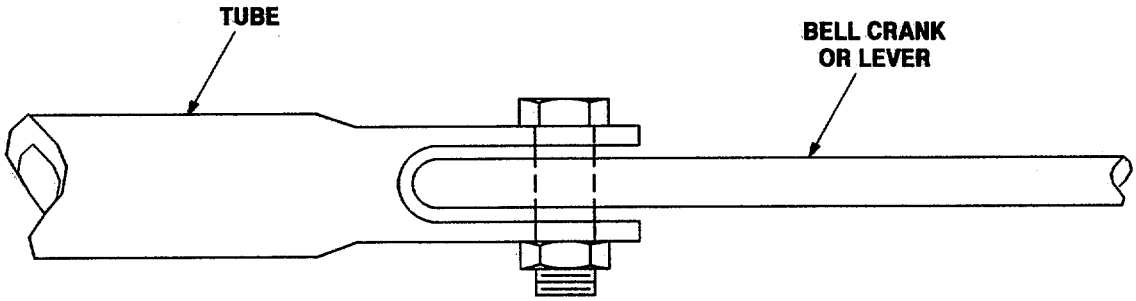

BELL CRANK OR LEVER ASSEMBLY
CONNECTION OF FABRICATED FLIGHT CONTROL

M102-170

Figure 11-7. Damaged Control Rods

CHAPTER 12
UTILITY SYSTEMS

BDAR TM PROCEDURES. THE EXPEDIENT REPAIR PROCEDURES IN BDAR TM ARE FOR USE IN COMBAT ONLY. STANDARD MAINTENANCE/REPAIR PROCEDURES ARE TO BE USED AS SOON THEREAFTER AS POSSIBLE.

12-1. SCOPE.

This chapter contains description, location, serviceability criteria, and cannibalization criteria for the utility systems. Repair of battle damage to the utility systems during combat may be deferrable depending on the damage or component function.

12-2. SYSTEM DESCRIPTION AND LOCATION.

The utility system consists of the windshield wipers, anti-ice/de-ice, fire detection, fire extinguishing, and canopy jettison subsystems. Refer to TM 1-1520-238-T for detailed description and operation of specific utility system components.

12-2.1. Windshield Wiper Subsystem (Figure 12-1). The windshield wipers subsystem consists of the following: pilot windshield wiper assembly, CPG windshield wiper assembly, two wiper motors, two flex-drives, and two converters. The windshield wipers are located on top of the helicopter at the pilot and CPG windshields.

12-2.2. Anti-Ice/De-Ice Subsystem. The anti-ice/de-ice subsystem consists of the following subsystems:

12-2.2.1. Rotor Blade De-Ice Subsystem (Figure 12-2). The rotor blade de-ice subsystem consists of the following: rotor blade de-ice controller, OAT sensor, ice detector sensor, ice detector signal processor, ice detector warm air supply valve, rotor blade de-ice blankets, main rotor distributor, main rotor slip ring assembly, and tail rotor slip ring assembly. The rotor blade de-ice components are located at various locations on the helicopter.

12-2.2.2. Engine Anti-Ice Subsystem (Figure 12-3). The engine anti-ice subsystem consists of the following: engine anti-ice bleed/start valves, thermal switches, engine inlet anti-ice valves, Nose Gearbox (NGB) heaters, upper aft fairing heaters, control units, and engine anti-ice relay box. The engine anti-ice components are located on the left and right NGBs and engines.

12-2.2.3. Canopy Anti-Ice Subsystem (Figure 12-4). The canopy anti-ice subsystem consists of the following: Canopy heating elements, canopy temperature sensor, and canopy temperature control. The canopy temperature control is located in the CPG cock-pit. The canopy heating elements and canopy temperature sensor are located in the pilot and CPG windshields.

12-2.2.4. TADS/PNVS Anti-Ice Subsystem (Figure 12-5). The TADS/PNVS anti-ice subsystem consists of the TADS/PNVS heating elements. The TADS/PNVS heating elements are located on the TADS/PNVS windows.

12-2.2.5. Pitot Anti-Ice Subsystem (Figure 12-6). The pitot anti-ice system consists of the following: left and right pitot tube heaters. The pitot tube heaters are located on the left and right wing tips.

12-2.3. Fire Detection Subsystem (Figure 12-7). The fire detection subsystem consists of the following: six flame detectors, three flame detector amplifiers, and three fire/overheat detectors. The fire detection components are located in the aft equipment bay, main transmission bay, and the engine 1 and 2 nacelles.

12-2.4. Fire Extinguishing Subsystem (Figure 12-8). The fire extinguishing subsystem consists of the following: primary and reserve fire bottle assemblies. The fire bottles are located in the aft equipment bay.

12-2.5. Canopy Jettison Subsystem (Figure 12-9). The canopy jettison subsystem consists of the following: three jettison handles, detonation cord, and four transparent canopy panels. The canopy jettison

components are located in pilot and CPG cockpits, transparent canopy panels, and on the top of the nose section of the helicopter under panel T50.

12-3. ASSESSMENT PROCEDURE.
The components of the utility system are susceptible to ballistic damage or operationally induced damage. Assess damage to determine if repair or cannibalization is necessary. Types of major damage that may be encountered during assessment are gouges, nicks, holes, bends, distortions, creases, and dents.

12-4. SERVICEABILITY CRITERIA.
Refer to TM 1-1520-238-23 for the serviceability criteria for each utility subsystem.

12-5. CANNIBALIZATION CRITERIA.
The utility system components are subject to possible combat damage, however due to the low probability of combat damage, a cannibalization candidate list has not been established. This was based on evaluations of the components' susceptibility of damage, deferrability, and low order of repairability. Whenever possible, defective utility system components should be cannibalized from other aircraft that are incapable of returning to base or considered unable to fly. When needed, any component may be cannibalized and used provided it is acceptable using the serviceability criteria provided.

12-6. REPAIR PROCEDURE INDEX.
Refer to TM 1-1500-204-23 for all repairs and damage assessment for outer tubing, metal tubing, and miscellaneous hardware. Refer to TM 55-1500-323-24 for electrical wiring repairs. Refer to TM 1-1520-238-23 for specific utility system component removal/installation procedures.

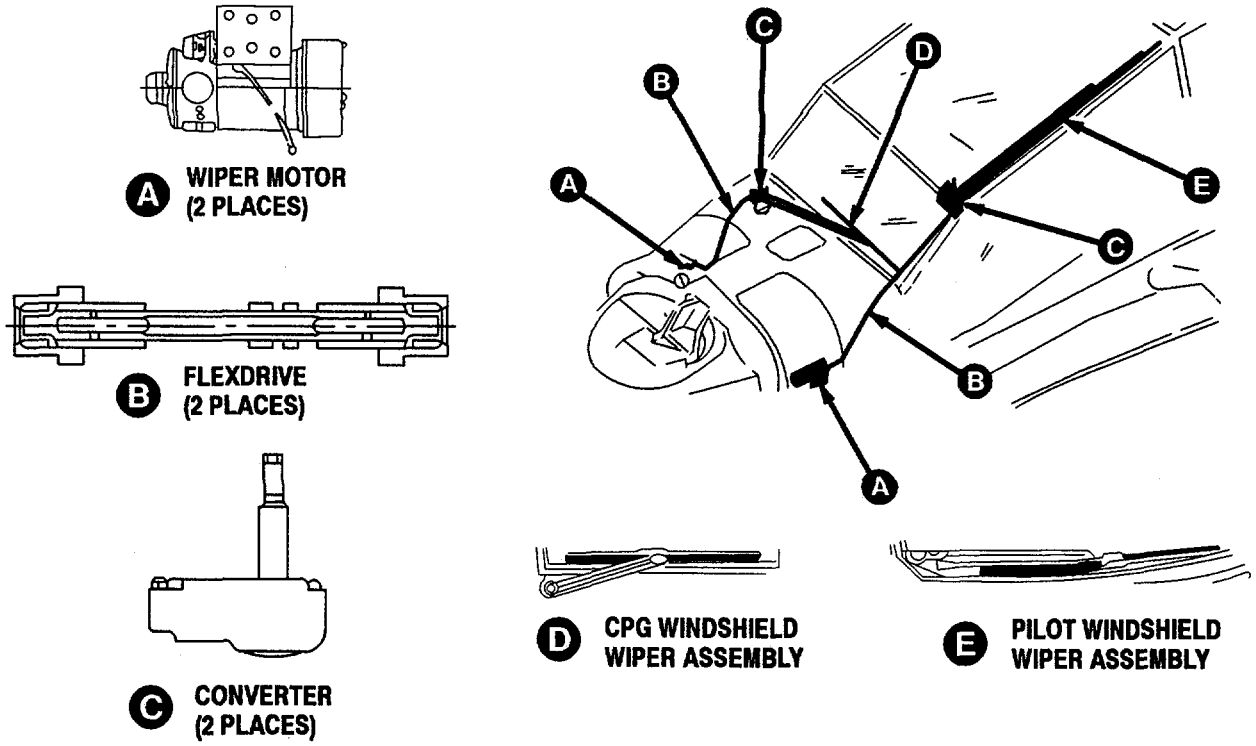

Figure 12-1. Windshield Wiper Subsystem Component Location

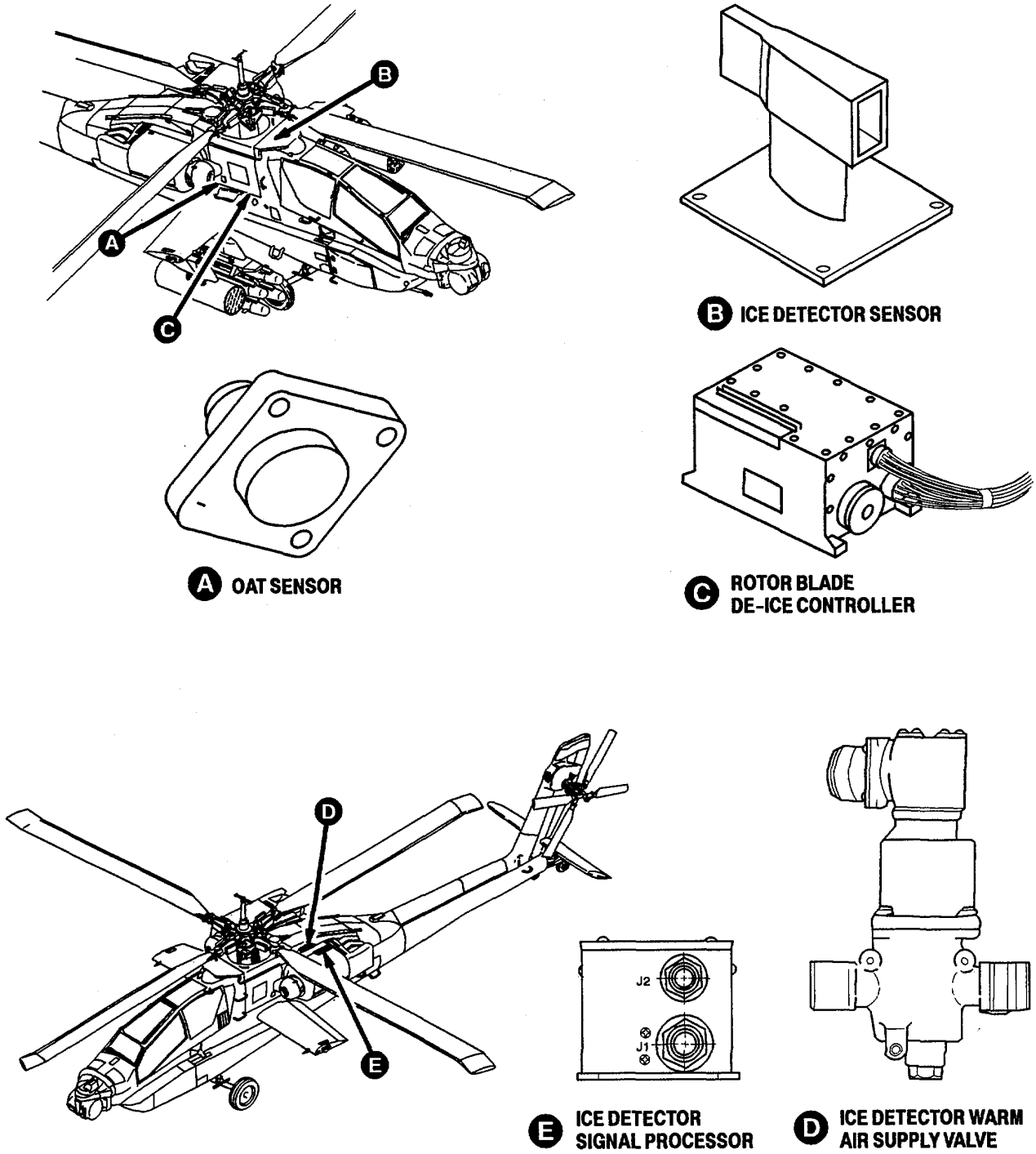

M102-143-1

Figure 12-2. Rotor Blade De-Ice Subsystem Component Location (Sheet 1 of 2)

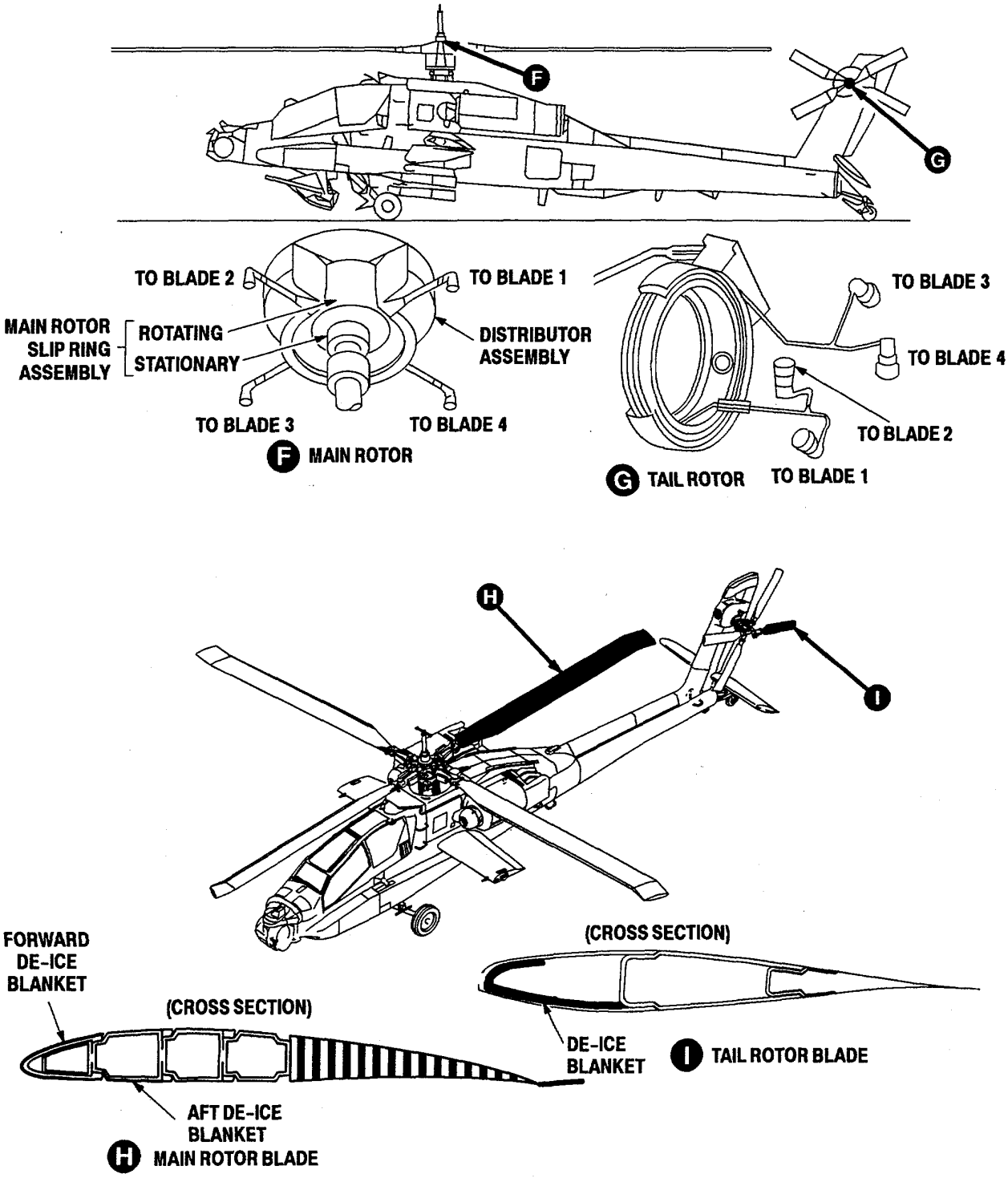

M102-143-2

Figure 12-2. Rotor Blade De-Ice Subsystem Component Location (Sheet 2 of 2)

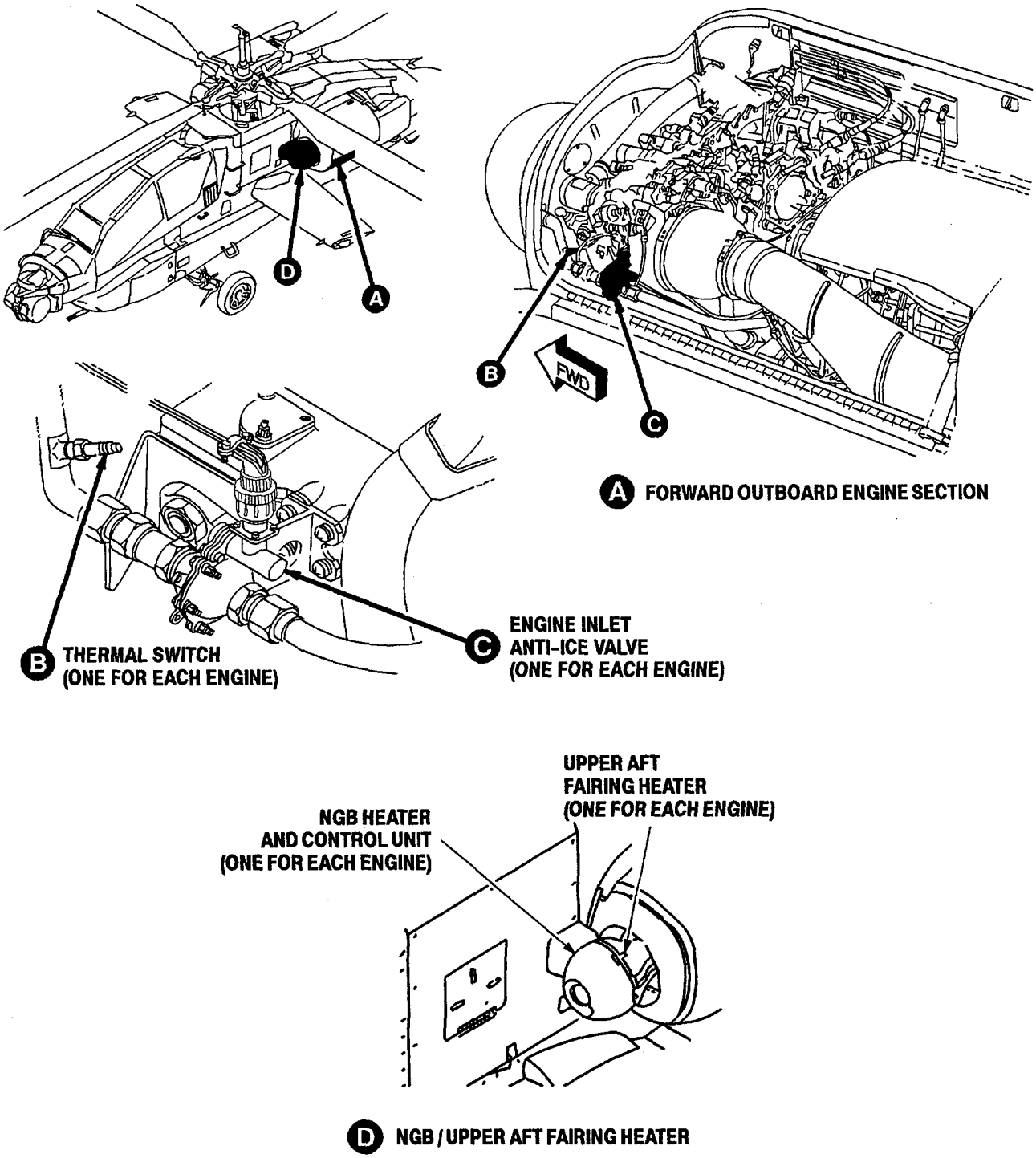

M102-144-1

Figure 12-3. Engine Anti-Ice Subsystem Component Location (Sheet 1 of 2)

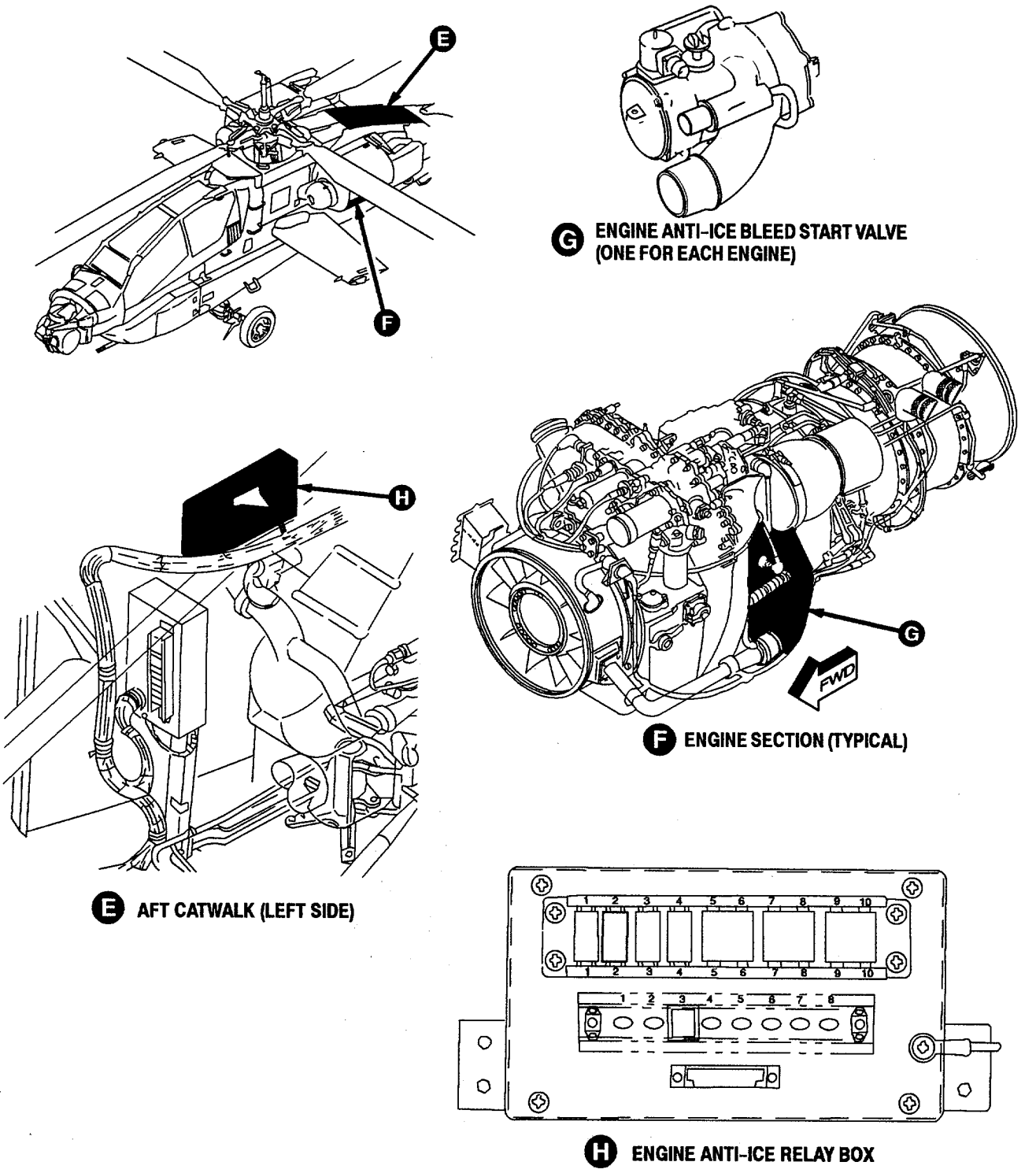

M102-144-2

Figure 12-3. Engine Anti-Ice Subsystem Component Location (Sheet 2 of 2)

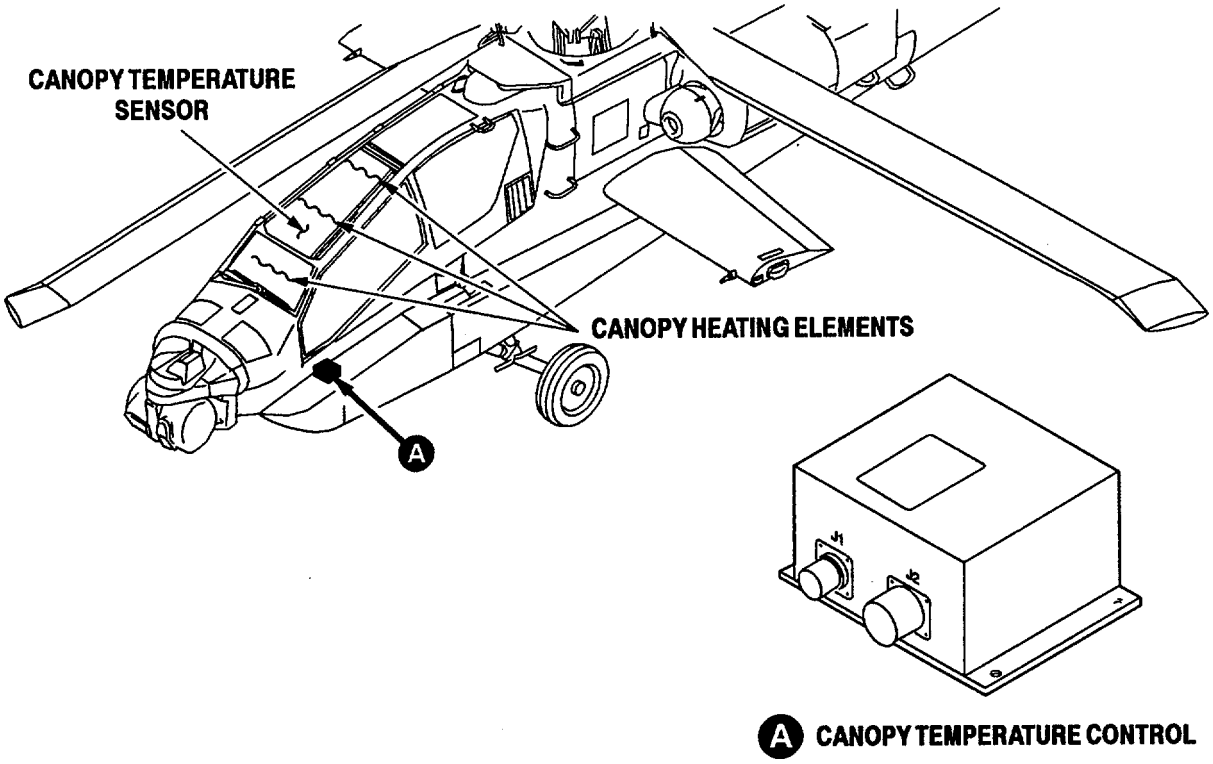

M102-145

Figure 12-4. Canopy Anti-Ice Subsystem Component Location

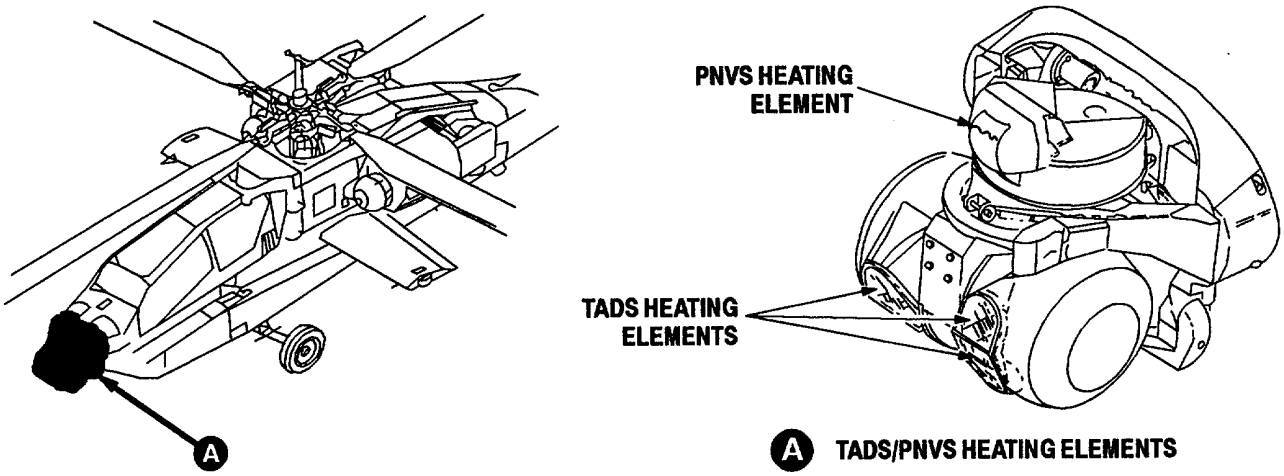

M102-146

Figure 12-5. TADS/PNVS Anti-Ice Subsystem Component Location

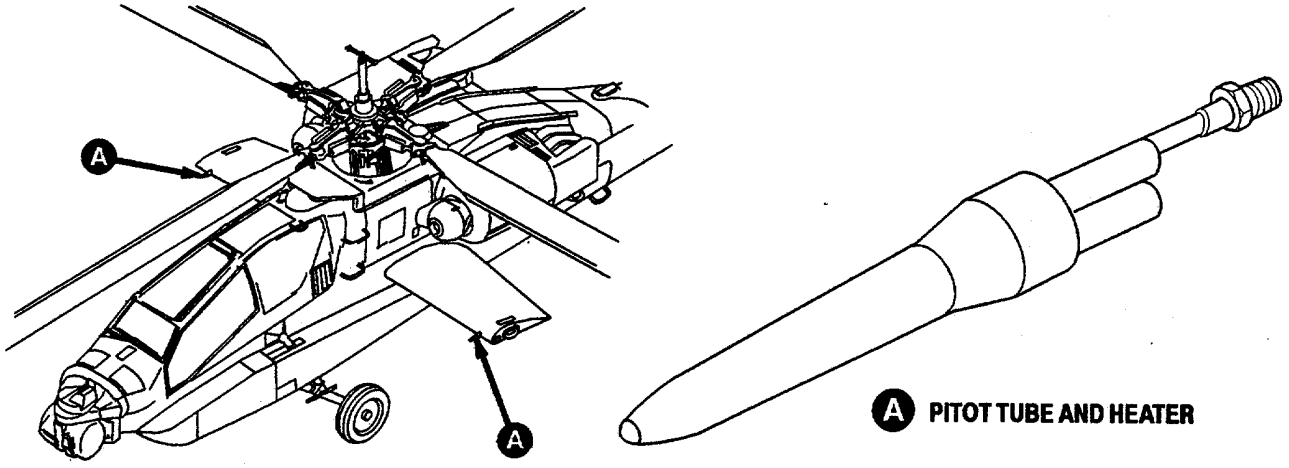

M102-147

Figure 12-6. Pitot Anti-Ice Subsystem Component Location

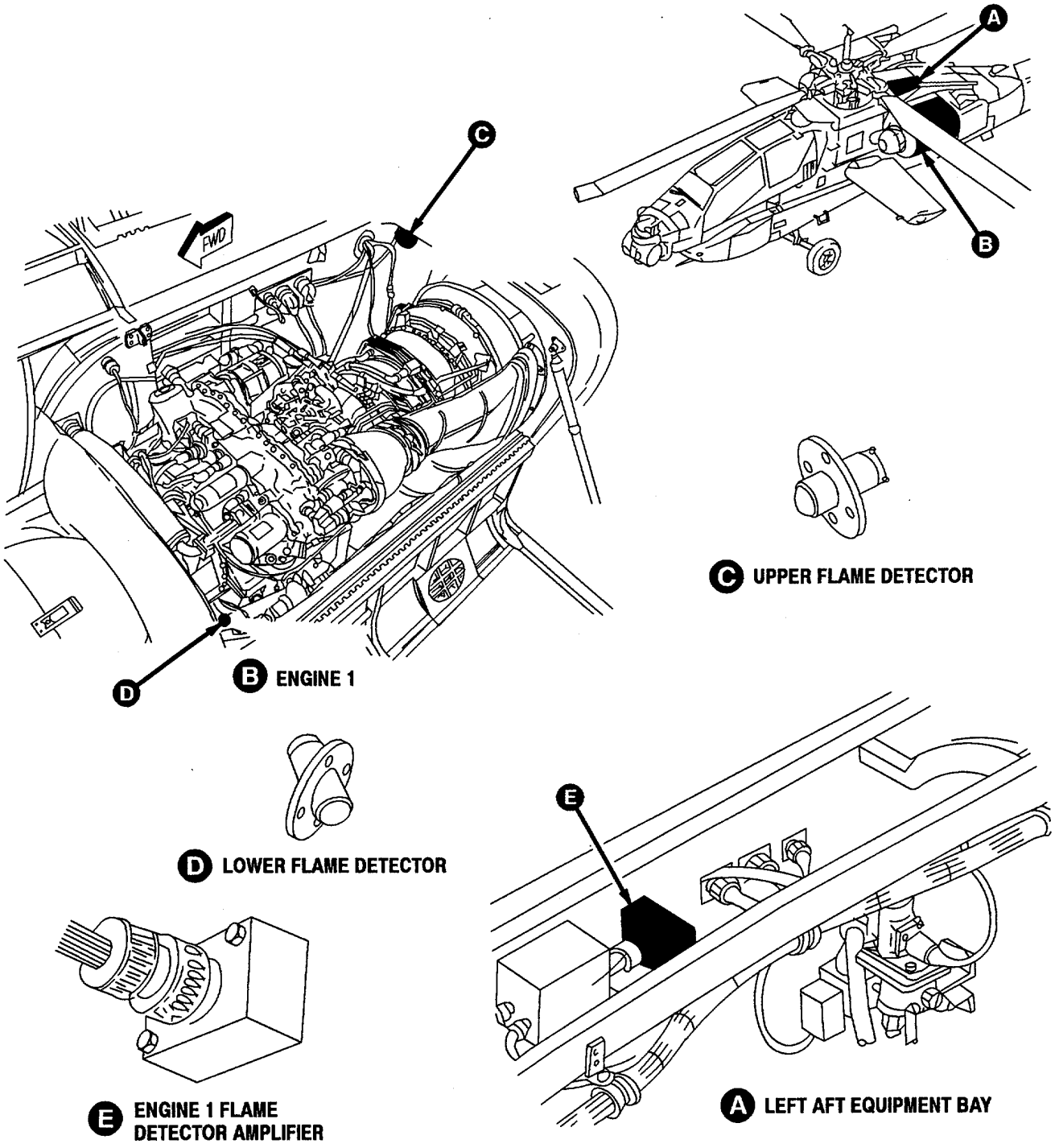

M102-148-1

Figure 12-7. Fire Detection Subsystem Component Location (Sheet 1 of 4)

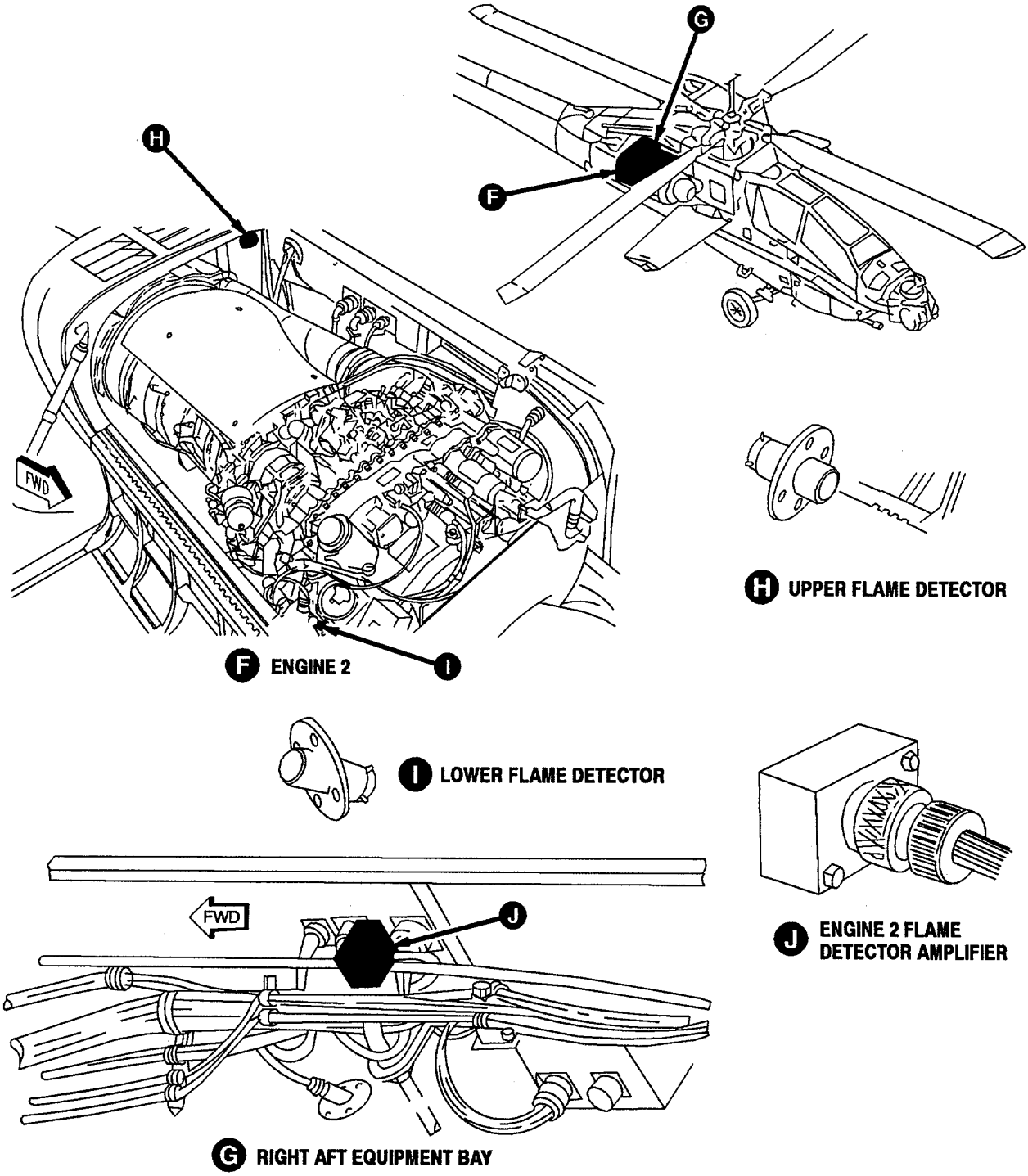

M102-148-2

Figure 12-7. Fire Detection Subsystem Component Location (Sheet 2 of 4)

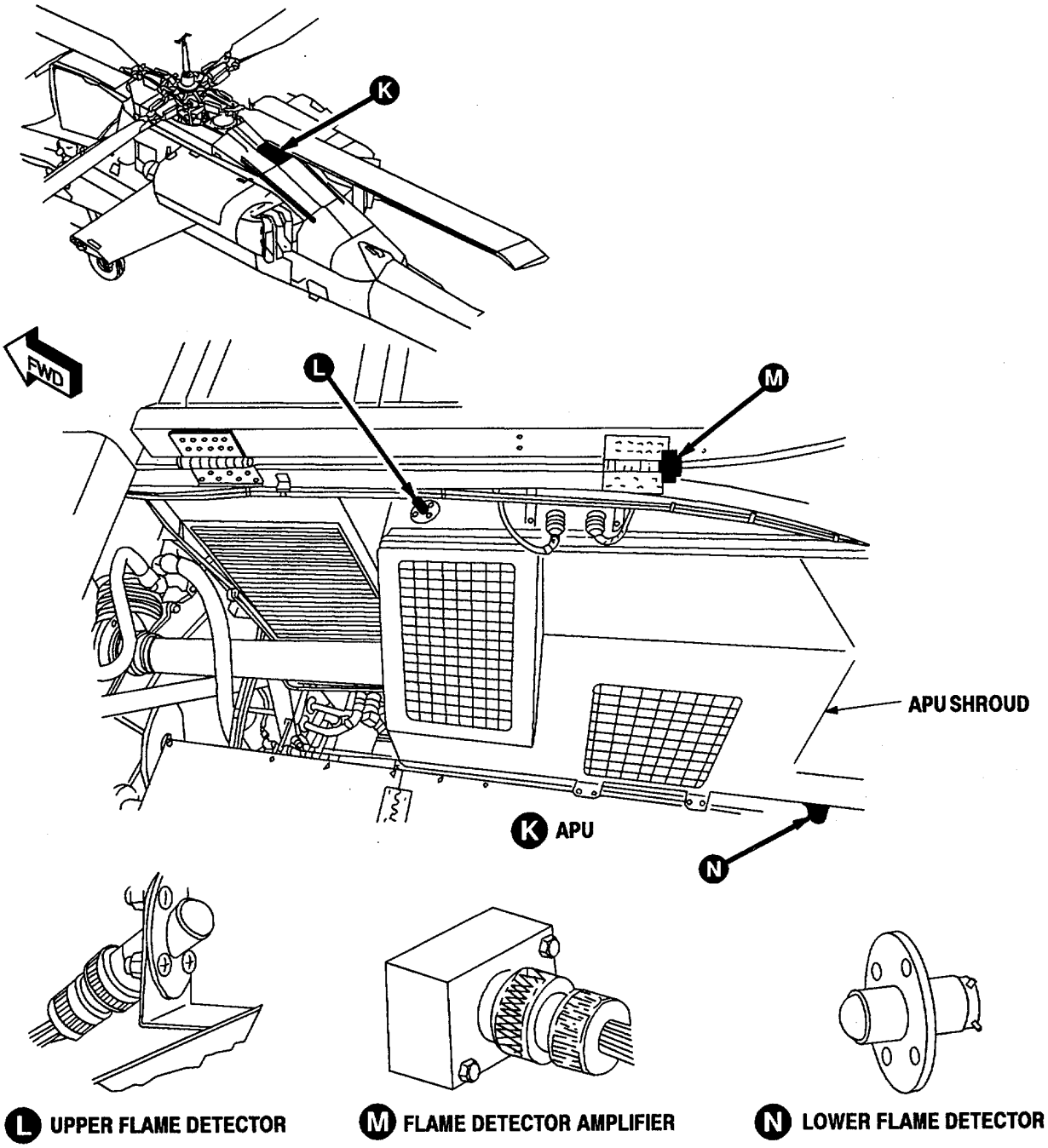

M102-148-3

Figure 12-7. Fire Detection Subsystem Component Location (Sheet 3 of 4)

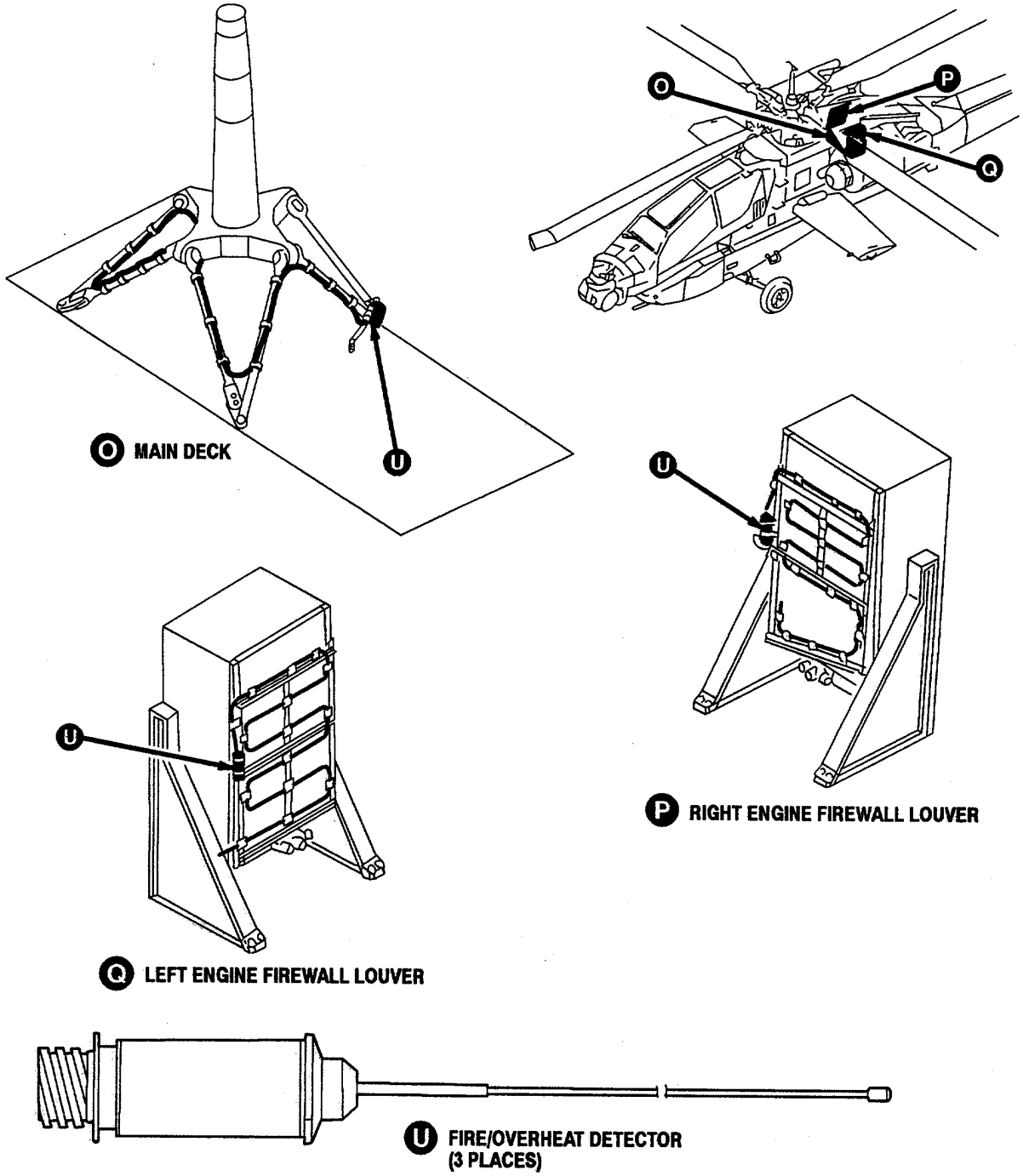

M102-148-4

Figure 12-7. Fire Detection Subsystem Component Location (Sheet 4 of 4)

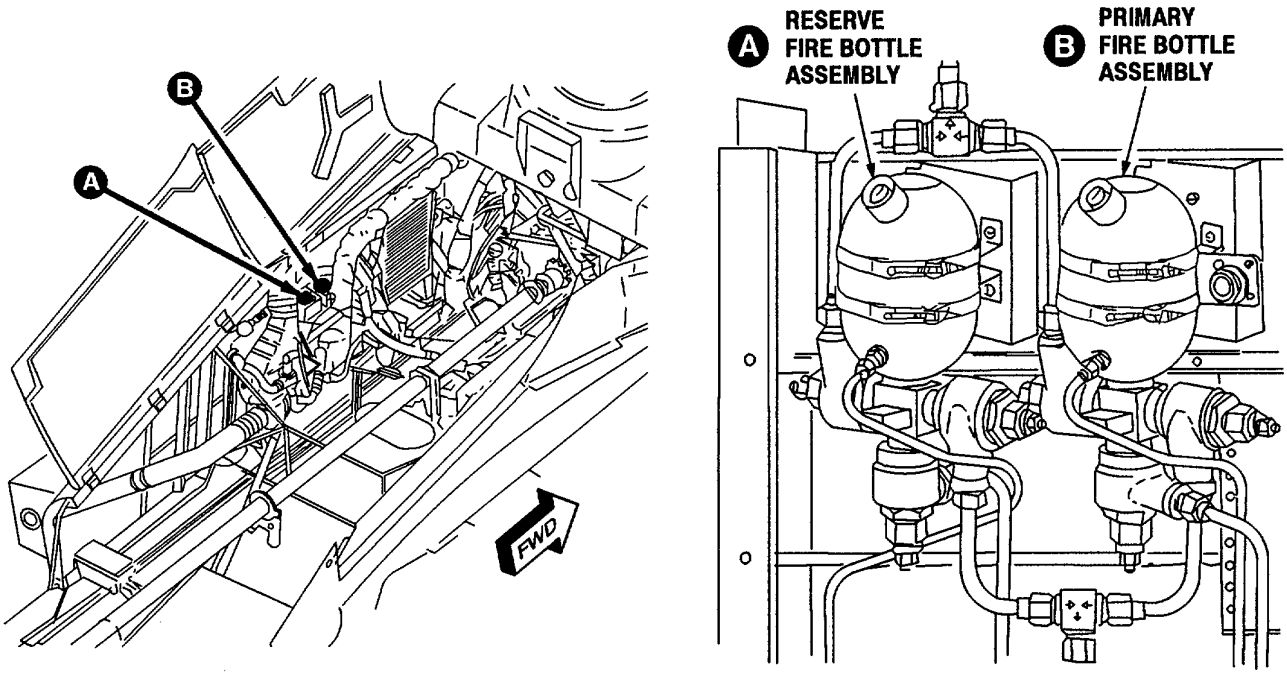

M102-149

Figure 12-8. Fire Extinguishing Subsystem Component Location

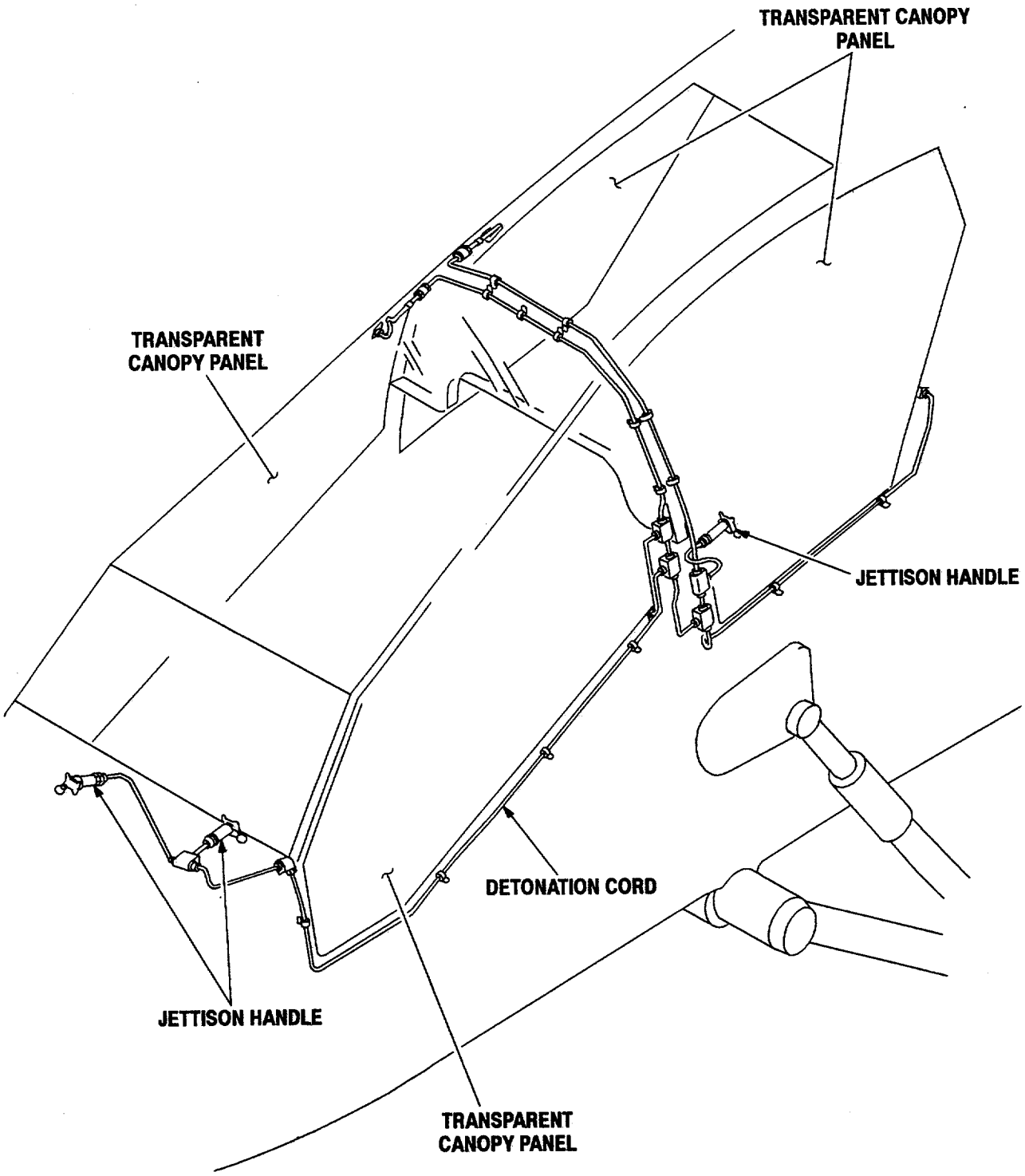

M102-150

Figure 12-9. Canopy Jettison Subsystem Component Location

CHAPTER 13
ENVIRONMENTAL CONTROL SYSTEM

BDAR TM PROCEDURES. THE EXPEDIENT REPAIR PROCEDURES IN BDAR TM ARE FOR USE IN COMBAT ONLY. STANDARD MAINTENANCE/REPAIR PROCEDURES ARE TO BE USED AS SOON THEREAFTER AS POSSIBLE.

SECTION I. INTRODUCTION

13-1. SCOPE.

This chapter contains description, location, serviceability criteria, and cannibalization criteria for the Environmental Control System (ECS). Repair of battle damage to the ECS during combat may be deferrable depending on the damage or component function.

13-2. SYSTEM DESCRIPTION AND LOCATION.

The ECS system consists of the Environmental Control Unit (ENCU) subsystem and the defog subsystem. Refer to TM 1-1520-238-T for detailed description and operation of specific ECS components.

13-2.1. ENCU Subsystem (Figure 13-1). The ENCU subsystem consists of the following: ENCU, ECS air ducts (identified by number), ECS shutoff valve, air outlets, vaneaxial fans, pilot ECS control panel, and CPG auxiliary control panel. The ENCU components are located in the aft equipment bay and the pilot and CPG cockpits.

13-2.2. Defog Subsystem (Figure 13-2). The defog subsystem consists of the following: shutoff valve, air distribution tubing, and four air mixers. The defog components are located in the aft equipment bay and the pilot and CPG cockpits.

13-3. ASSESSMENT PROCEDURE.

The components of the ECS system are susceptible to ballistic damage or operationally induced damage. Assess damage to determine if repair or cannibalization is necessary. Types of major damage that may be encountered during assessment are gouges, nicks, holes, bends, distortions, creases, and dents.

13-4. SERVICEABILITY CRITERIA.

Refer to TM 1-1520-238-23 for the serviceability criteria for each ECS subsystem. When a non-structural component is damaged, most instances will result in deferred repair. When any damage is deferred, periodic inspections shall be performed to monitor damage growth.

13-5. CANNIBALIZATION CRITERIA.

The ECS system components that are considered crucial during combat are identified by the ECS system cannibalization candidates list (Table 13-1). Whenever possible, these components should be cannibalized from other aircraft that are incapable of returning to base or considered unable to fly. This list is a prediction based on evaluations of the components' susceptibility of damage, deferrability, and repairability. This is not an exhaustive list of all components which may be cannibalized. When needed, any component may be cannibalized and used provided it is acceptable using the serviceability criteria provided.

Table 13-1. ECS System Cannibalization Candidates

Nomenclature	Part Number
ECS Shutoff Valve (Figure 13-1)	7-116310001
Temperature Control Unit (Figure 13-1)	625614-2-1
Air Pressure Regulator (ENCU) (Figure 13-1)	2203010-1-1

13-6. REPAIR PROCEDURE INDEX

Repair Procedure	Para
ENCU Surface Damage Repair	13-8
Duct Repair.....	13-10
Bleed Air Line Repair	13-12

Refer to TM 55-1500-323-24 for electrical wiring repairs. Refer to TM 1-1520-238-23 for specific ECS system component removal/installation procedures.

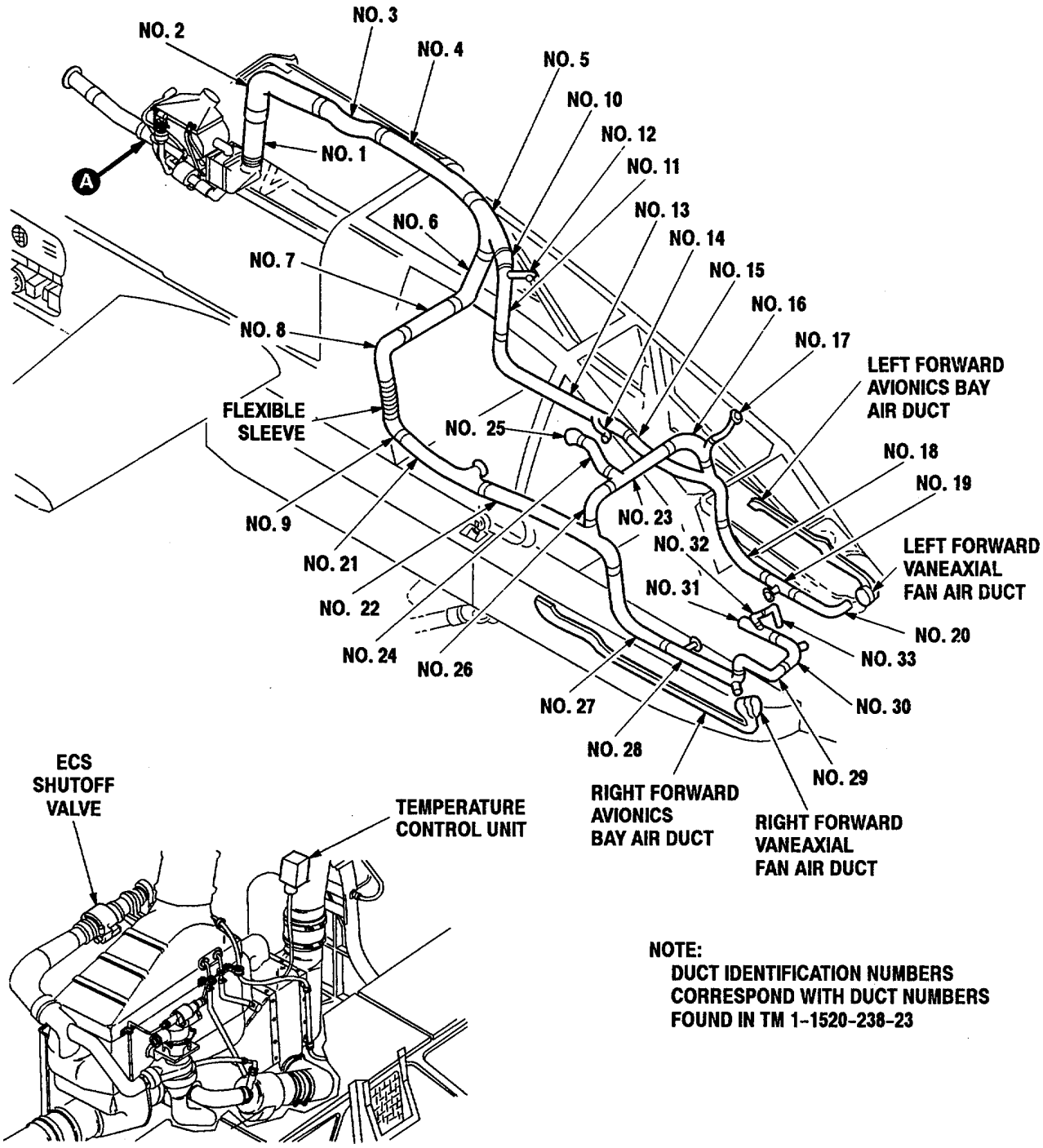

M102-077

Figure 13-1. ENCU Subsystem Component Location

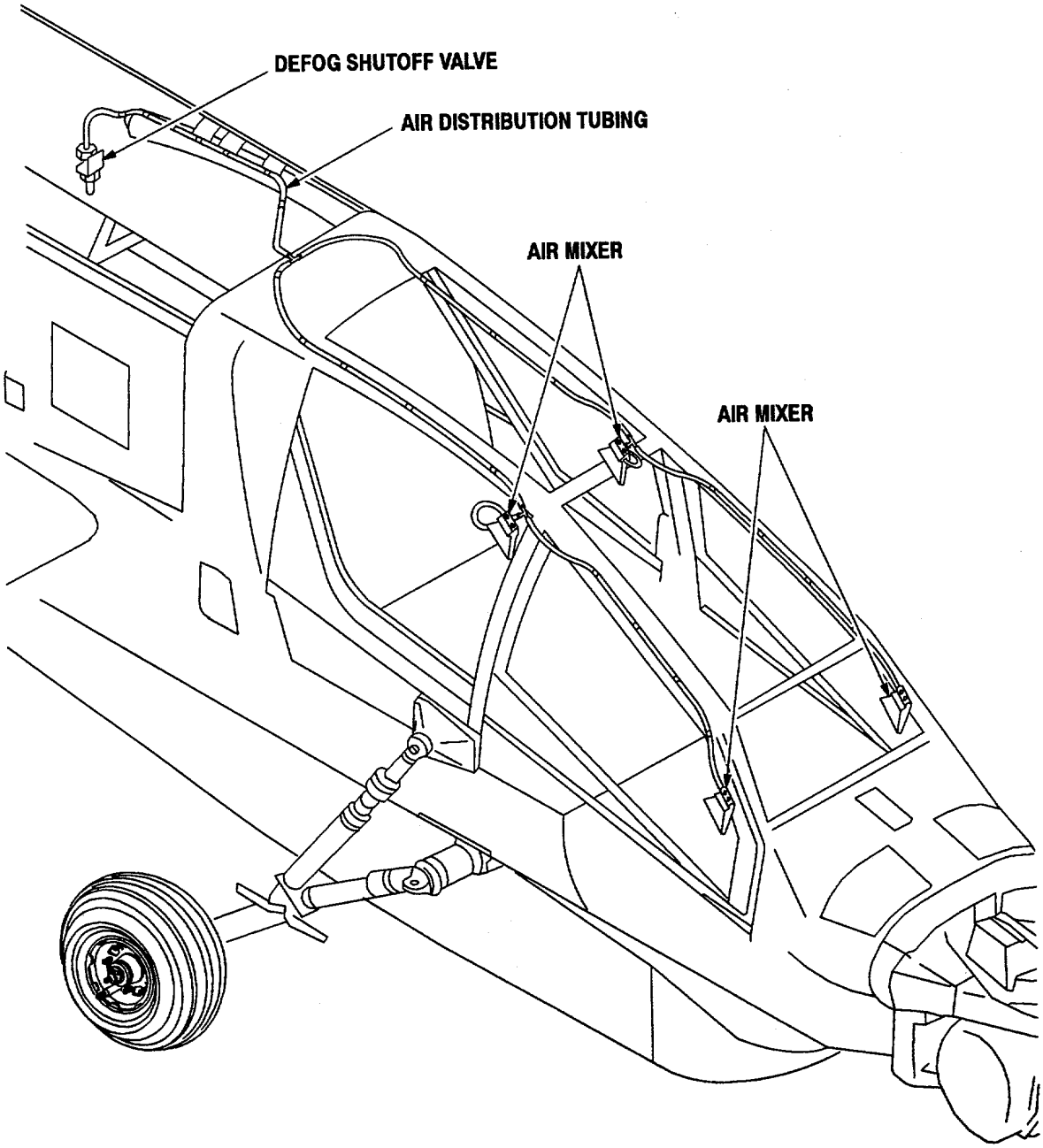

M102-78

Figure 13-2. Defog Subsystem Component Location

SECTION II. ENVIRONMENTAL CONTROL UNIT (ENCU)

13-7. GENERAL.

The ENCU is the heart of the cooling and heating system. If damage has not occurred to the ENCU's cooling turbine, the unit can normally be repaired and put back in operation. The cooling turbine operates at high speed and is accordingly very sensitive to damage.

13-8. ENCU SURFACE DAMAGE REPAIR.

13-8.1. General Information: Some damage, holes, or cracks to the external surface of the ENCU housing can be repaired provided no critical internal damage is incurred.

13-8.2. Option 1: Fiberglass Repair on ENCU Housing (Figure 13-3).

13-8.2.1. Limitations: Hole(s) must not exceed 25 percent of total exposed surface area of housing. Crack(s) must not exceed 50 percent of the length of the surface area of housing.

13-8.2.2. Personnel/Time Required:

- 1 person
- 3 hours

13-8.2.3. Materials/Tools Required:

- Adhesive (item 2, App C)
- Cloth (item 12, App C)
- Dry cleaning solvent (item 14, App C)
- Abrasive paper (item 26, App C)
- Light duty laboratory apron (item 4, App B)
- 3/8-inch portable pneumatic drill (item 15,
- App B)
- Chemical protective gloves (item 19, App B)
- Adjustable air filtering respirator (item 28, App B)

13-8.2.4. Procedural Steps:

1. Locate hole on housing.
2. Stop drill any cracks which might be extending from hole.
3. Clean surface to be repaired with solvent.
4. Sand surface around hole. Sanded surface should extend at least 1.5 inches from the edge of hole at all points.
5. Cut piece of cloth that will overlap hole by 1.5 inches at all points.
6. Apply adhesive to sanded area around hole.
7. Press patch over hole.
8. Apply adhesive over cloth and all around edge of cloth.
9. Allow time for adhesive to cure.
10. Record BDR action taken. When mission is complete, as soon as practical, repair equipment/system using standard maintenance procedures.

13-8.3. Option 2: Metal Repair on ENCU Housing (Figure 13-3).

13-8.3.1. Limitations: Hole(s) must not exceed 10 percent of total exposed surface area of housing. Crack(s) must not exceed 50 percent of the length of the surface area of housing. Inspect repair after every flight.

13-8.3.2. Personnel/Time Required:

- 1 person
- 1 hour

13-8.3.3. Materials/Tools Required:

- Sheet metal (item 41, App C)
- Tape (item 58, App C) or tape (item 60, App C)
- Light duty laboratory apron (item 4, App B)
- 3/8-inch portable pneumatic drill (item 15, App B)
- Chemical protective gloves (item 19, App B)
- Adjustable air filtering respirator (item 28, App B)

13-8.3.4. Procedural Steps:

1. Locate hole on housing.
2. Stop drill any cracks which might be extending from hole.
3. Clean surface to be repaired with solvent.
4. Cut a patch out of sheet metal that will overlap the hole by 1.5 inches at all points.
5. Tape patch into place.
6. Record BDR action taken. When mission is complete, as soon as practical, repair equipment/system using standard maintenance procedures.

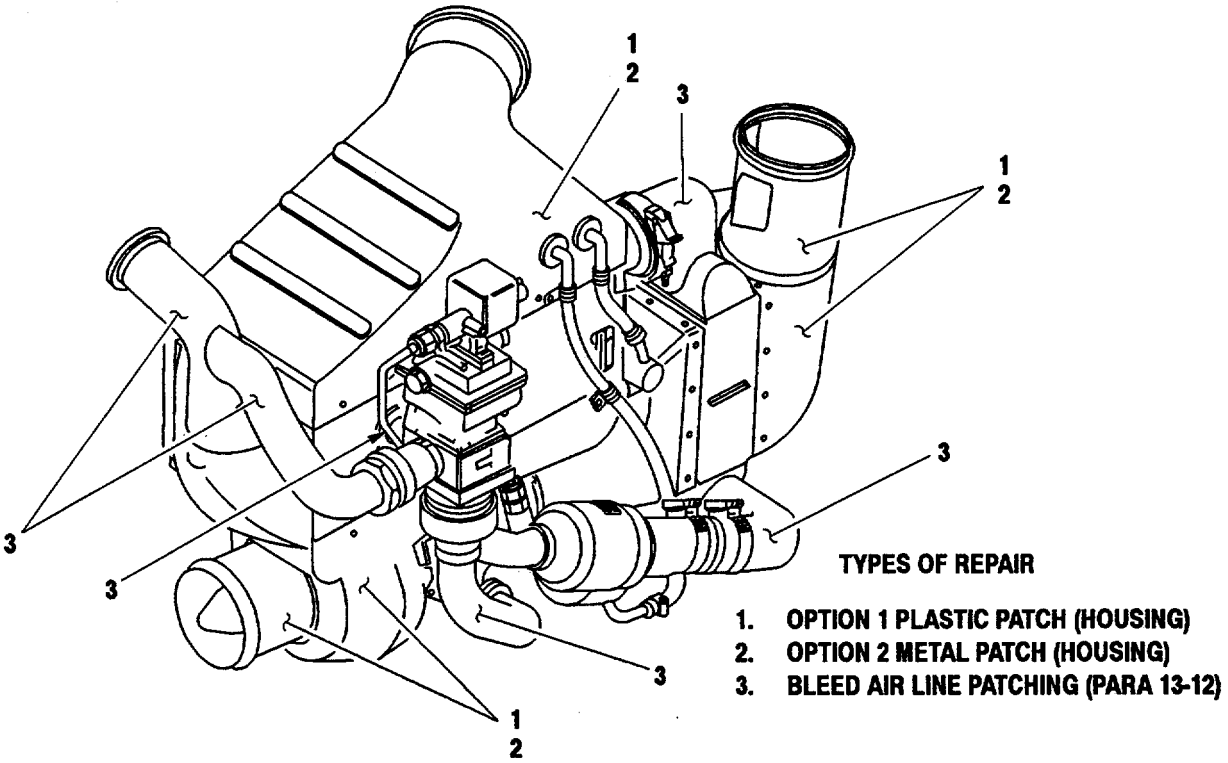

M102-174

Figure 13-3. ENCU Repairs

SECTION III. DUCTING

13-9. GENERAL.

The ducting may be repaired using almost any patching material since this is a non-critical area of the helicopter.

13-10. DUCT REPAIR.

13-10.1. Rigid Duct Patch Repair.

13-10.1.1. Limitations: Hole diameter(s) must not exceed 25 percent of total exposed surface area of duct. Crack length(s) must not exceed 50 percent of the length of the duct.

13-10.1.2. Personnel/Time Required:

- 1 person
- 1 hour

13-10.1.3. Materials/Tools Required:

- Dry cleaning solvent (item 14, App C)
- Abrasive paper (item 27, App C)
- Sealing compound (item 40, App C)
- Sheet metal (item 41, App C)
- Tape (item 58, App C) or tape (item 60, App C)
- Light duty laboratory apron (item 4, App B)
- 3/8-inch portable pneumatic drill (item 15, App B)
- Chemical protective gloves (item 19, App B)
- Adjustable air filtering respirator (item 28, App B)
- Aircraft maintenance tool kit (item 38, App B)

13-10.1.4. Procedural Steps:

1. Locate damaged area and remove panels or other components as necessary to gain access to duct to be repaired. Refer to Figure 13-1 for locations of rigid plastic ducts.
2. Cut patch out of sheet stock. Patch should extend 1.5 inches from edge of hole at all points.
3. Stop drill any cracks which might be extending from hole.
4. Sand both bottom surface of patch and surface area around hole to be covered by patch.
5. Clean surface to be repaired with solvent.
6. Apply sealing compound to patch and on surface area that will be covered by patch.
7. Press patch in place and wrap tape around patch and duct to hold repair in position.
8. Record BDR action taken. When mission is complete, as soon as practical, repair equipment/system using standard maintenance procedures.

13-10.2. Flexible Duct or Seal Sleeve Patch Repair.

13-10.2.1. Limitations: Hole diameter(s) must not exceed 25 percent of total exposed surface area of duct or sleeve. Crack length(s) must not exceed 50 percent of the length of the duct or sleeve.

13-10.2.2. Personnel/Time Required:

- 1 person
- 15 minutes

13-10.2.3. Materials/Tools Required:

- Tape (item 58, App C) or tape (item 60, App C)
- Aircraft maintenance tool kit (item 38, App B)

13-10.2.4. Procedural Steps:

1. Locate damaged area and remove panels or other components as necessary to gain access to the duct to be repaired. Refer to Figure 13-1 for location of flexible plastic ducts and seal sleeves.
2. Wrap tape several turns around duct to cover hole or tear. Tape should extend beyond damaged area 3.0 to 4.0 inches in each direction.
3. Record BDR action taken. When mission is complete, as soon as practical, repair equipment/system using standard maintenance procedures.

SECTION IV. BLEED AIR LINES

13-11. GENERAL.

Effective repair of hot bleed air lines is considered temporary. Limited repair may be made as outlined below.

13-12. BLEED AIR LINE REPAIR.

13-12.1. Limitations: Hole diameter(s) must not exceed 1.5 times the diameter of the tube. Crack length(s) must not exceed 5 times the diameter of the tube. Inspect repair after every flight.

13-12.2. Personnel Time Required:

- 1 person
- 1 hour

13-12.3. Materials/Tools Required:

- Appropriate quantity and size clamp (item 7, App C), clamp (item 8, App C), clamp (item 9, App C), or clamp (item 10, App C); or wire (item 68, App C)
- Sealing compound (item 40, App C)
- Sheet metal (item 41, App C)
- Tape (item 58, App C)
- Light duty laboratory apron (item 4, App B)
- Chemical protective gloves (item 19, App B)
- Adjustable air filtering respirator (item 28, App B)
- Aircraft mechanic's tool kit (item 39, App B)

13-12.4. Procedural Steps: (Figures 13-3 and 13-4).

1. Locate damaged area and remove panels and other items as necessary to gain access tdine to be repaired.

2. Cut patch from sheet metal to cover hole or other damage. Patch should extend approximately 1.0 inch from hole or damage at all points if possible.

3. Clean surface to be repaired with solvent.

4. Apply sealant around hole area and on patch.

5. Place patch in position. Ensure patch fits contour of the line.

6. Wrap aluminum tape around repair. Tape should cover at least 2.0 inches beyond edge of repair.

7. Secure metal patch in place using hose clamp(s). (If hose clamps are not available, secure in place with safety wire.)

8. Record BDR action taken. When mission is complete, as soon as practical, repair equipment/system using standard maintenance procedures.

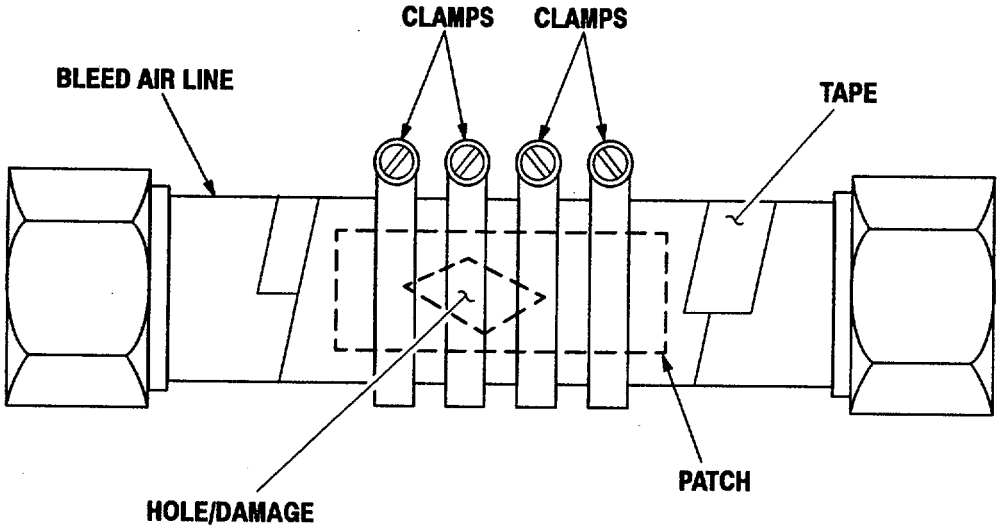

REPAIR USING CLAMPS

M102-173

Figure 13-4. Bleed Air Line Patch Repair

CHAPTER 14
HOIST AND WINCHES

BDAR TM PROCEDURES. THE EXPEDIENT REPAIR PROCEDURES IN BDAR TM ARE FOR USE IN COMBAT ONLY. STANDARD MAINTENANCE/REPAIR PROCEDURES ARE TO BE USED AS SOON THEREAFTER AS POSSIBLE.

(This chapter is not applicable for the AH-64A.)

CHAPTER 15
AUXILIARY POWER UNIT

BDAR TM PROCEDURES. THE EXPEDIENT REPAIR PROCEDURES IN BDAR TM ARE FOR USE IN COMBAT ONLY. STANDARD MAINTENANCE/REPAIR PROCEDURES ARE TO BE USED AS SOON THEREAFTER AS POSSIBLE.

15-1. SCOPE.

This chapter contains description, location, serviceability criteria, and cannibalization criteria for the Auxiliary Power Unit (APU) system. Repair of battle damage to the APU system during combat may be deferrable depending on the damage or component function.

15-2. SYSTEM DESCRIPTION AND LOCATION.

The APU system consists of the truss subsystem and the strut subsystem (Figure 15-1). Refer to TM 1-1520-238-T for detailed description and operation of specific APU components.

15-2.1. Truss Subsystem. The truss subsystem consists of the following: five fittings, two APU fitting mounts, APU, and two trusses. The truss subsystem is located on the RH side of the aft equipment bay, aft of the RH engine louver door.

15-2.2. Strut Subsystem. The strut subsystem consists of the following: auxiliary strut support, rod end bearing, auxiliary power fitting, and shims. The strut is located under the APU, aft of the trusses.

15-3. ASSESSMENT PROCEDURE.

The components of the APU system are susceptible to ballistic damage or operationally induced damage. Assess damage to determine if repair or cannibalization is necessary. Types of major damage that may be encountered during assessment are gouges, nicks, holes, bends, distortions, creases, and dents.

154. SERVICEABILITY CRITERIA.

Serviceability criteria provides each APU subsystem with general and specific criteria. When a structural component is damaged and the serviceability criteria for the specific type of damage is not presented, TM 1-1520-238-23 inspection criteria shall be utilized. When a non-structural component is damaged, most instances will result in deferred repair. When any damage is deferred, periodic inspections shall be performed to monitor damage growth. Table 15-1 provides APU system components expanded combat damage criteria. Table 15-2 provides inspection criteria for the APU oil system.

Table 15-1. APU System Components Expanded Combat Damage Criteria

Nomenclature	Part Number	Damage Criteria
APU Fitting Mount (Figure 15-1)	7-211651019	Nicks, gouges, and scratches are allowed. Maximum depth of material removed is 0.130 inch without repair.
LH Truss Assembly (Figure 15-1)	7-311651028-3	Nicks, gouges, and scratches are allowed. Maximum depth of material removed is 0.030 inch without repair.
	7-311651028-5	Nicks, gouges, and scratches are allowed. Maximum depth of material removed is 0.025 inch without repair.

Table 15-1. APU System Components Expanded Combat Damage Criteria-Cont

Nomenclature	Part Number	Damage Criteria
RH Support Truss (Figure 15-1)	7-311651027-5	Nicks, gouges, and scratches are allowed. Maximum depth of material removed is 0.025 inch without repair
	7-311651027-3,-7	Nicks, gouges, and scratches are allowed. Maximum depth of material removed is 0.020 inch without repair
NOTE Damage limits are maximum allowed without repair and blending is not required unless specified. However, damage should be blended out whenever possible.		

Table 15-2. APU Oil System Combat Inspection Criteria

Nomenclature	Combat Sample Interval	Sample Evaluation Method	Inspection Criteria	Maintenance Action
APU	On-Condition	None	1. <50 percent clogged oil filter. 2.>50 percent clogged oil filter	1. Remove and replace oil filter. 2. Remove and replace APU

15-5. CANNIBALIZATION CRITERIA.

The APU system components that are considered crucial during combat are identified by the APU system cannibalization candidates list (Table 15-3). Whenever possible, these components should be cannibalized from other aircraft that are incapable of returning to base or considered unable to fly. This list is a prediction based on evaluations of the components' susceptibility of damage, deferrability, and repairability. This is not an exhaustive list of all components which may be cannibalized. When needed, any component may be cannibalized and used provided it is acceptable using the serviceability criteria provided.

Table 15-3. APU System Cannibalization Candidates

Nomenclature	Part Number
Gas Turbine Engine (APU) (Figure 15-1)	3800102-2
LH Truss Assembly (Figure 15-1)	7-311651028
RH Support Truss (Figure 15-1)	7-311651027
APU Fitting Mount (Figure 15-1)	7-211651019

15-6. REPAIR PROCEDURE INDEX.

Refer to Chapter 7 for hydraulic tubing assessment/repair. Refer to TM 55-1500-323-24 for electrical wiring repairs. Refer to TM 1-1520-238-23 for specific APU system component removal/installation procedures.

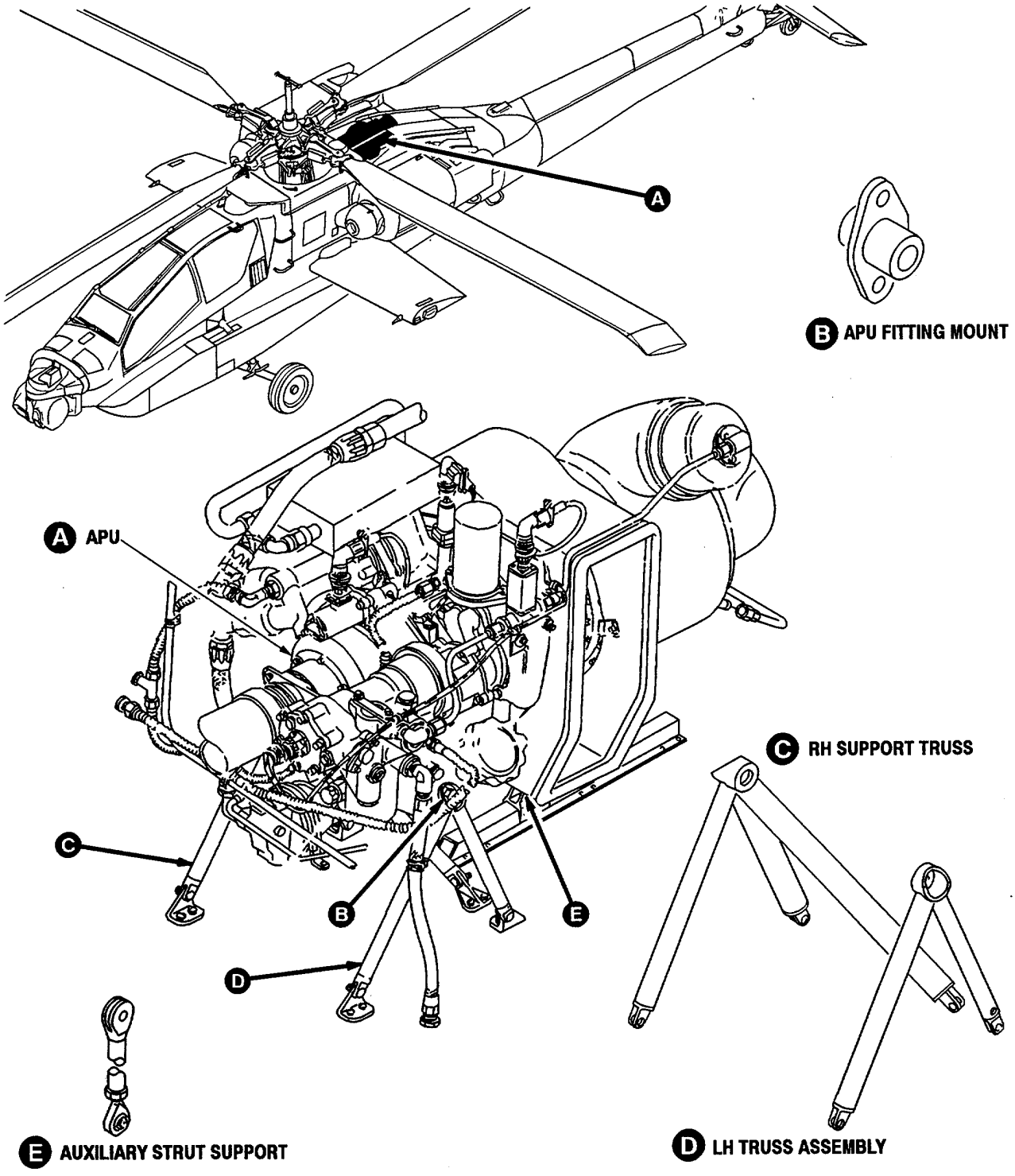

M102-027

Figure 15-1. APU System Component Location

CHAPTER 16
MISSION EQUIPMENT

BDAR TM PROCEDURES. THE EXPEDIENT REPAIR PROCEDURES IN BDAR TM ARE FOR USE IN COMBAT ONLY. STANDARD MAINTENANCE/REPAIR PROCEDURES ARE TO BE USED AS SOON THEREAFTER AS POSSIBLE.

16-1. SCOPE.

This chapter contains description, location, serviceability criteria, and cannibalization criteria for the mission equipment. Repair of battle damage to the mission equipment during combat may be deferrable depending on the damage or component function.

16-2. SYSTEM DESCRIPTION AND LOCATION.

The mission equipment system consists of the External Stores System (ESS). The ESS (Figure 16-1) consists of the following: four pylons and an External Stores Controller (ESC). Each pylon consists of the following: pylon actuator, Pylon Actuator Controller (PAC), station director, Multiplex Remote Terminal Unit (MRTU), and a rack assembly. The pylons are mounted to the wings and the ESC is mounted on the left side of the helicopter behind door L140. Refer to TM 1-1520-238-T for detailed description and operation of specific ESS components.

16-3. ASSESSMENT PROCEDURE.

The components of the mission equipment system are susceptible to ballistic damage or operationally induced damage. Assess damage to determine if repair or cannibalization is necessary. Types of major damage that may be encountered during assessment are gouges, nicks, holes, bends, distortions, creases, and dents.

16-4. SERVICEABILITY CRITERIA.

Serviceability criteria provides the mission equipment system with general and specific criteria. When a critical area or component is damaged and the serviceability criteria for the specific type of damage is not presented, TM 1-1520-238-23 inspection criteria shall be utilized. When a non-structural component is damaged, most instances will result in deferred repair. When any damage is deferred, periodic inspections shall be performed to monitor damage growth.

16-5. CANNIBALIZATION CRITERIA.

The mission equipment system components that are considered crucial during combat are identified by the mission equipment cannibalization candidates list (Table 16-1). Whenever possible, these components should be cannibalized from other aircraft that are incapable of returning to base or considered unable to fly. This list is a prediction based on evaluations of the components' susceptibility of damage, deferrability, and repairability. This is not an exhaustive list of all components which may be cannibalized. When needed, any component may be cannibalized and used provided it is acceptable using the serviceability criteria provided.

Table 16-1. Mission Equipment System Cannibalization Candidates

Nomenclature	Part Number
Pylon Assembly (Figure 16-1)	7-318000001-613
External Stores Controller (Figure 16-1)	7-317400210-11
Frame Assembly (Figure 16-1)	7-318000003-607
Rack Assembly (Figure 16-1)	7-318000150-11

Table 16-1. Mission Equipment System Cannibalization Candidates - Cont

Nomenclature	Part Number
Pylon Actuator Controller (Figure 16-1)	88001330-104
Station Director (Figure 16-1)	7-317320000-3
Multiplex Remote Terminal Unit Type II (Figure 16-1)	4032298-954

16-6. REPAIR PROCEDURE INDEX.

Refer to Chapter 7 for hydraulic tubing assessment/repair. Refer to TM 55-1500-323-24 for electrical wiring repairs. Refer to TM 1-1520-238-23 for specific external stores system component removal/installation procedures.

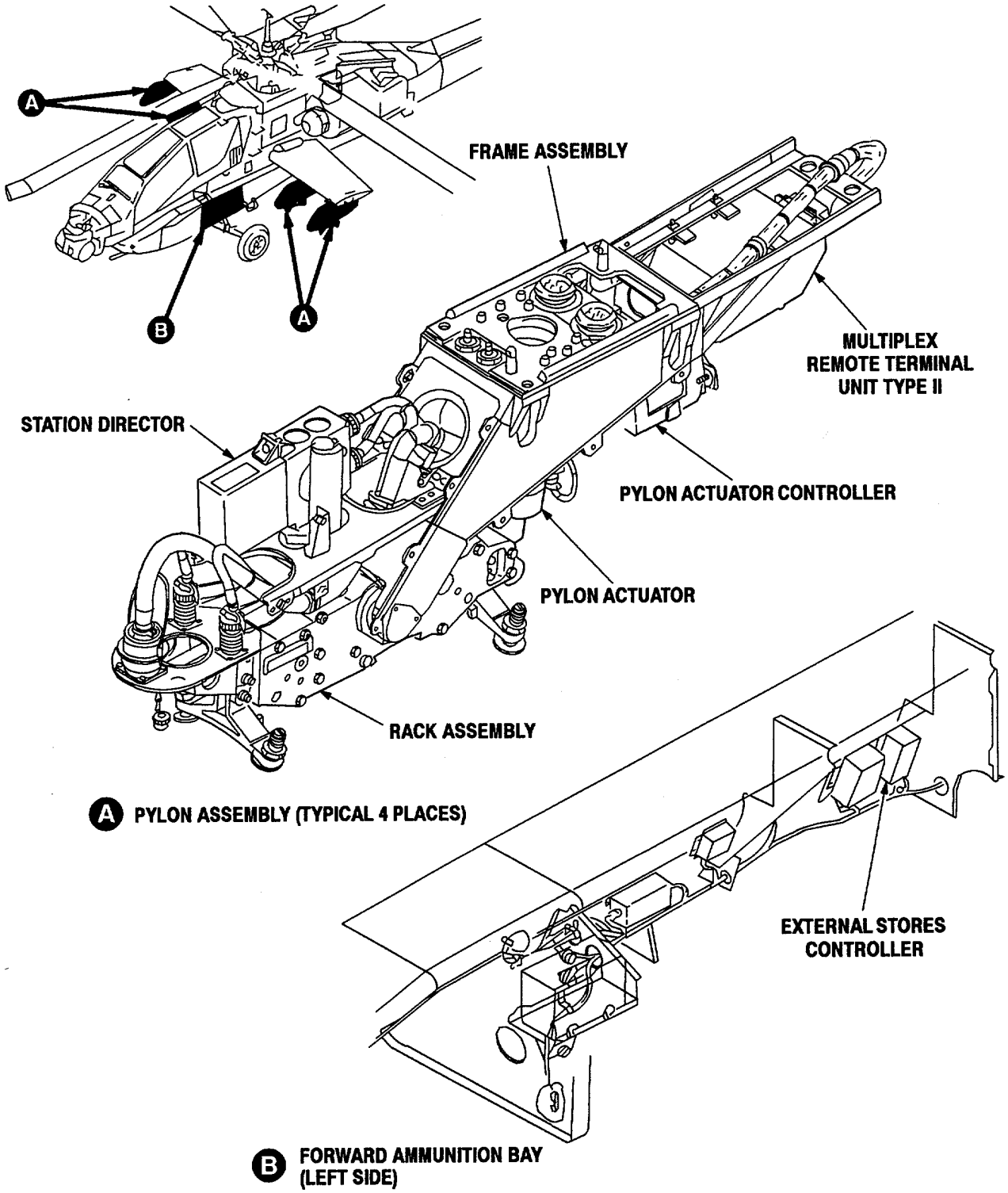

M102-167

Figure 16-1. External Stores System Component Location

CHAPTER 17
EMERGENCY EQUIPMENT

BDAR TM PROCEDURES. THE EXPEDIENT REPAIR PROCEDURES IN BDAR TM ARE FOR USE IN COMBAT ONLY. STANDARD MAINTENANCE/REPAIR PROCEDURES ARE TO BE USED AS SOON THEREAFTER AS POSSIBLE.

(This chapter is not applicable for the AH-64A.)

CHAPTER 18
AVIONICS

BDAR TM PROCEDURES. THE EXPEDIENT REPAIR PROCEDURES IN BDAR TM ARE FOR USE IN COMBAT ONLY. STANDARD MAINTENANCE/REPAIR PROCEDURES ARE TO BE USED AS SOON THEREAFTER-AS POSSIBLE.

18-1. SCOPE.

This chapter contains description, location, serviceability criteria, and cannibalization criteria for the avionics system, Target Acquisition Designation Sight/Pilot Night Vision Sensor (TADS/PNVS) system, fire control/ multiplex system, and Integrated Helmet and Display Sight System (IHADSS). Repair of battle damage to these systems during combat may be deferrable depending on the damage or component function.

18-2. SYSTEM DESCRIPTION AND LOCATION.

The avionics system consists of the communications, navigation, Identification Friend or Foe (IFF), and penetration aids and countermeasures subsystems. The TADS/PNVS, fire control/multiplex, and IHADSS systems are also included in this chapter. Refer to TM 11-1520-238-23-1 for detailed description and operation of specific avionic system components. Refer to TM 9-1270-476-20-1 for detailed description and operation of specific TADS/PNVS system components. Refer to TM 9-1230-476-20-1 for detailed description and operation of specific multiplex system components. Refer to TM 9-1270-221-23 for detailed description and operation of specific IHADSS system components. The avionics, TADS/PNVS, fire control/multiplex, and IHADSS systems are located throughout the helicopter.

18-2.1. Avionics System. The avionics system consists of the following subsystems:

18-2.1.1. Communications Subsystem (Figure 18-1). The communication subsystem consists of the following: VHF and UHF radios, antennas, communication security, and intercom system.

18-2.1.2. Navigation Subsystem (Figure 18-2). The navigation subsystem consists of the following: Attitude Reference System (HARS), antennas, radar altimeter, Video Display Unit (VDU), Automatic Direction Finder (ADF), and Doppler Navigation System (DNS).

18-2.1.3. IFF Subsystem (Figure 18-3). The IFF subsystem consists of the following: antennas, computer, and receiver/transmitter.

18-2.1.4. Penetration Aids and Countermeasures Subsystem (Figure 18-4). The penetration aids and countermeasures subsystem consists of the following: radar warning and jamming equipment and infrared jamming equipment.

18-2.2. TADS/PNVS System (Figure 18-5). The TADS/PNVS system consists of the following: TADS turret, PNVS turret, aircraft interface assembly, Optical Relay Tube (ORT), TADS Electronic Unit (TEU), TADS power supply, Laser Electronics Unit (LEU), and PNVS electronic unit.

18-2.3. Fire Control/Multiplex System (Figure 18-6). The fire control/multiplex system consists of the following: Fire Control Computer (FCC), Back-Up Bus Controller (BBC), Multiplex Remote Terminal Units (MRTU) Types I and II, Remote Hellfire Electronics (RHE), symbol generator, Digital Automatic Stabilization Equipment Computer (DASEC), Air Data Processor (ADP), Aerial Rocket Control System (ARCS), CPG fire control panel, and Data Entry Keyboard (DEK).

18-2.4. IHADSS System (Figure 18-7). The IHADSS system consists of the following: Sight Electronics Unit (SEU), Display Electronics Unit (DEU), Sensor Surveying Unit (SSU), Display Adjust Panel (DAP), Integrated Helmet Unit (IHU), Helmet Display Unit (HDU), and Boresight Reticle Unit (BRU).

18-3. ASSESSMENT PROCEDURE.

The components of the avionics, TADS/PNVS, fire control/multiplex, and IHADSS systems are susceptible to ballistic damage or operationally induced damage. Assess damage to determine if repair or cannibalization is necessary. Types of major damage that may be encountered during assessment are gouges, nicks, holes, bends, distortions, creases, and dents.

18-4. SERVICEABILITY CRITERIA.

Serviceability criteria provides the avionics, TADS/PNVS, fire control/multiplex, and IHADSS systems with general and specific criteria. When a critical area or component is damaged and the serviceability criteria for the specific type of damage is not presented, TM 11-1520-238-23-1,TM 9-1270-476-20-1, TM 9-1230-476-20-1, or TM 9-1270-221-23 inspection criteria shall be utilized. When a non-structural component is damaged, most instances will result in deferred repair. When any damage is deferred, periodic inspections shall be performed to monitor damage growth.

18-5. CANNIBALIZATION CRITERIA.

The avionics, TADS/PNVS, fire control/multiplex, and IHADSS system components that are considered crucial during combat are identified by the avionics system cannibalization candidates list (Table 18-1). Whenever possible, these components should be cannibalized from other aircraft that are incapable of returning to base or considered unable to fly. This list is a prediction based on evaluations of the components' susceptibility of damage, deferrability, and repairability. This is not an exhaustive list of all components which may be cannibalized. When needed, any component may be cannibalized and used provided it is acceptable using the serviceability criteria provided.

Table 18-1. Avionics System Cannibalization Candidates

Nomenclature	Part Number
TADS Electronic Unit (TEU) Assembly (Figure 18-5)	13076362
PNVS (Figure 18-5)	13080000
TADS (Figure 18-5)	13076000-519
TADS Power Supply (Figure 18-5)	13075523
PNVS Electronic Unit Assembly (Figure 18-5)	13080410
Heading Attitude Reference System (HARS) (Figure 18-2, sheet 1)	AN/ASN-143
Fire Control Computer (FCC) (Figure 18-6, sheet 1)	7-319200005
Communication Control (Figure 18-1, sheet 2)	C-10414/ARC
Digital Automatic Stabilization Equipment Computer (DASEC) (Figure 18-6, sheet 1)	4040859-960
Aerial Rocket Control System (ARCS) Panel (Figure 18-6, sheet 2)	7-317310000
Optical Relay Tube (ORT) (Figure 18-5)	13076385
Computer Display Unit (CDU) (Figure 18-2, sheet 3)	CP-1252B/ASN-128 or IP-1552/G
Air Data Processor (ADP) (Figure 18-6, sheet 1)	7-319720008
Radio Receiver (ADF) (Figure 18-2, sheet 2)	R1496A/ARN89 or R-2382/ARN-149(V)1

Table 18-1. Avionics System Cannibalization Candidates - Cont

Nomenclature	Part Number
Display Adjust Panel (DAP) (Figure 18-7, sheet 1)	CG1082AB01
Sensor Surveying Unit (SSU) (Figure 18-7, sheet 1)	LG1127AB01
Receiver/Transmitter (VHF - AM/FM Radio) (Figure 18-1, sheet 1)	RT1354/ARC186(V) or RT1476/ARC-201(V)
Back-Up Bus Controller (BBC) Multiplex Remote Terminal Unit (MRTU) Type III (Figure 18-6, sheet 1)	4032299-959
Speech Security Equipment (Figure 18-1, sheet 2)	TSEC/KY-58
Symbol Generator (Figure 18-6, sheet 1)	7-319800002-7
MRTU Type I (Figure 18-6, sheet 1)	4032297-955
Countermeasures Transmitter (IR Jammer) (Figure 18-4, sheet 4)	T-1360A/ALQ 144(V)
Receiver/Transmitter (UHF/AM Receiver) (Figure 18-1, sheet 1)	RT-1167C/ARC164(A)
Radar Warning Comparator (Figure 18-4, sheet 1)	CM-440/APR-39(V)
Receiver/Transmitter (Radar Altimeter) (Figure 18-2, sheet 2)	RT-1115D/APN-209(V)
Receiver/Transmitter (IFF) (Figure 18-3)	RT-1296/APX-100
Remote Hellfire Electronics (RHE) (Figure 18-6, sheet 1)	622-5646-004
CPG Fire Control Panel (Figure 18-6, sheet 2)	7-319510011
Laser Electronic Unit (LEU) (Figure 18-5)	13079400
Receiver/Transmitter (Doppler) (Figure 18-2, sheet 3)	RT-1193A/ASN
Data Entry Keyboard (DEK) Panel (Figure 18-6, sheet 2)	7-219510034
Video Display Unit (VDU) (Figure 18-2, sheet 1)	7-311C10025

18-6. REPAIR PROCEDURE INDEX.

Refer to TM 55-1500-323-24 for electrical wiring repairs. Refer to TM 11-1520-238-23-1 for specific avionic system component removal/installation procedures. Refer to TM 9-1270-476-20-1 for specific TADS/PNVS system component removal/installation procedures. Refer to TM 9-1230-476-20-1 for specific fire control/ multiplex system component removal/installation procedures. Refer to TM 9-1270-221-23 for specific IHADSS system component removal/installation procedures.

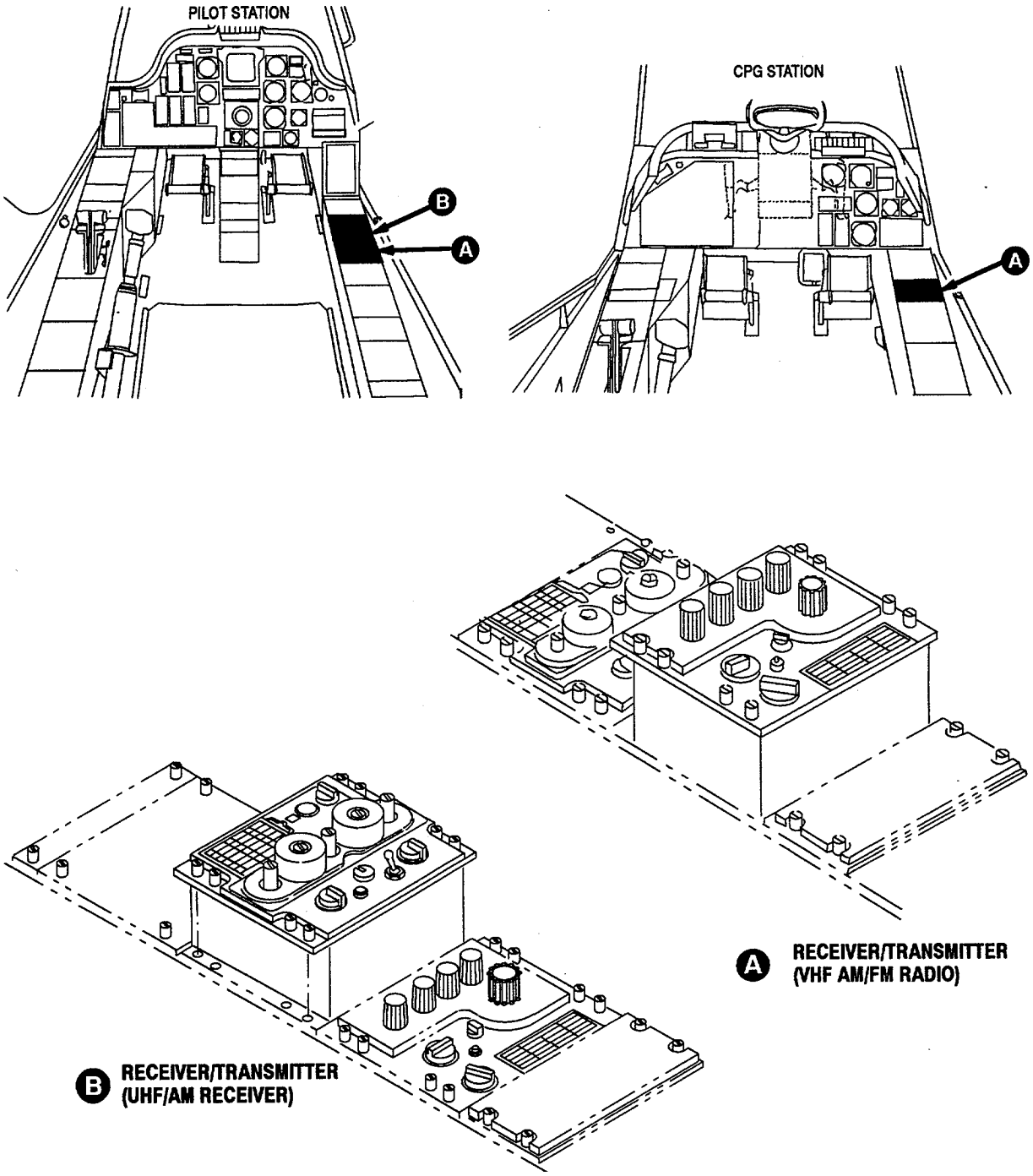

M102-209-1

Figure 18-1. Communication Subsystem Component Location (Sheet 1 of 2)

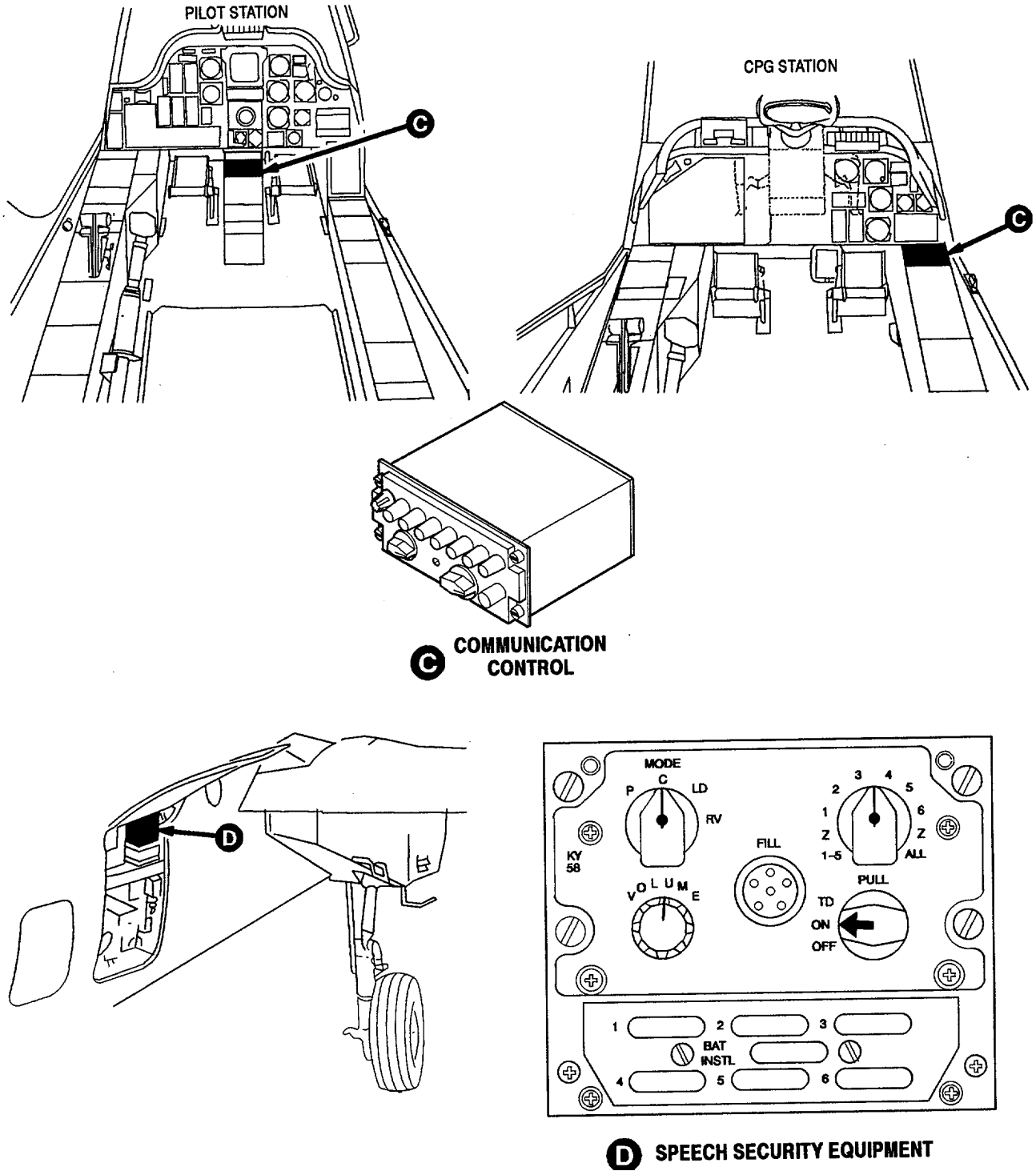

M102-209-2

Figure 18-1. Communication Subsystem Component Location (Sheet 2 of 2)

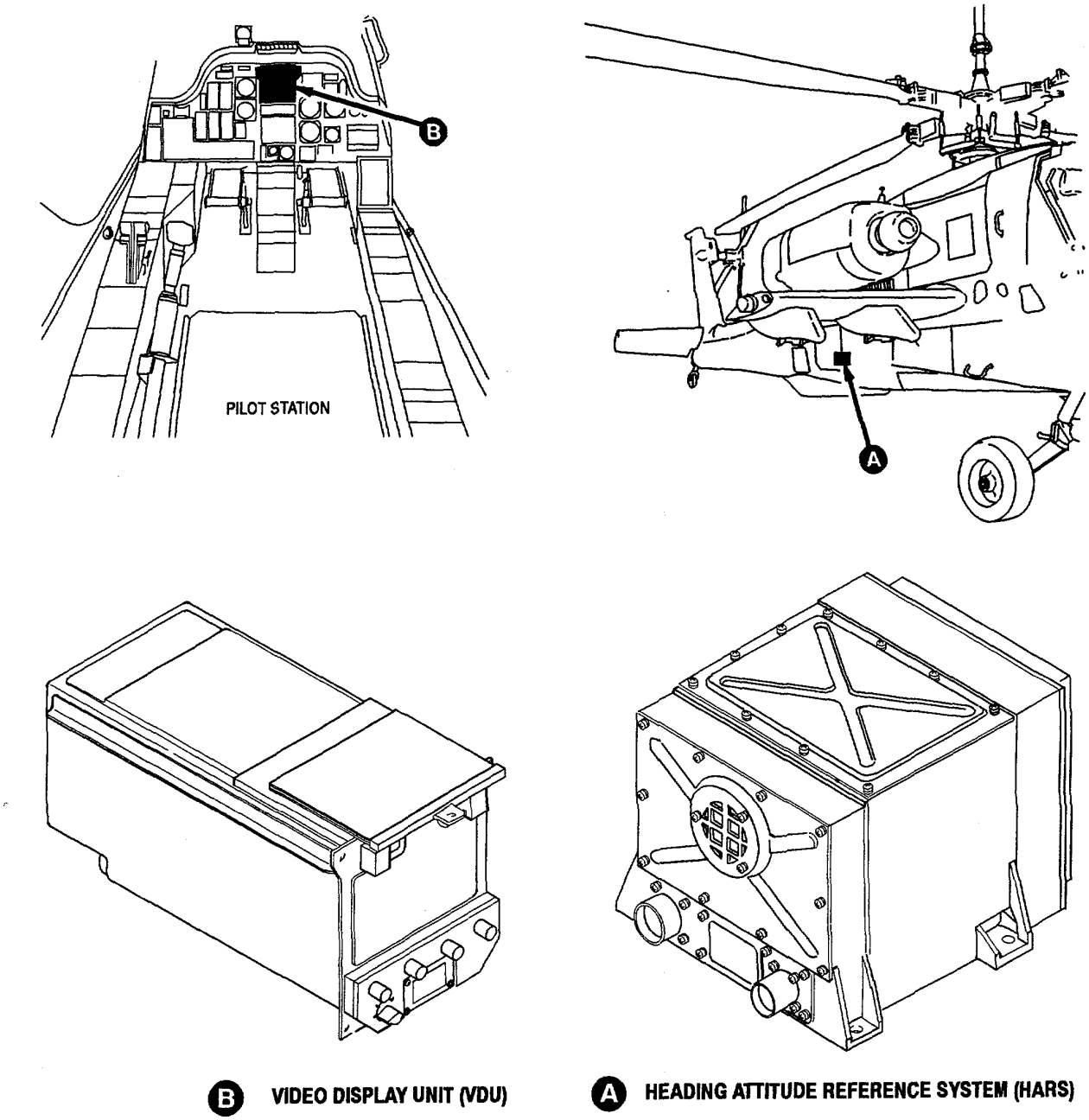

M102-208-1

Figure 18-2. Navigation Subsystem Component Location (Sheet 1 of 3)

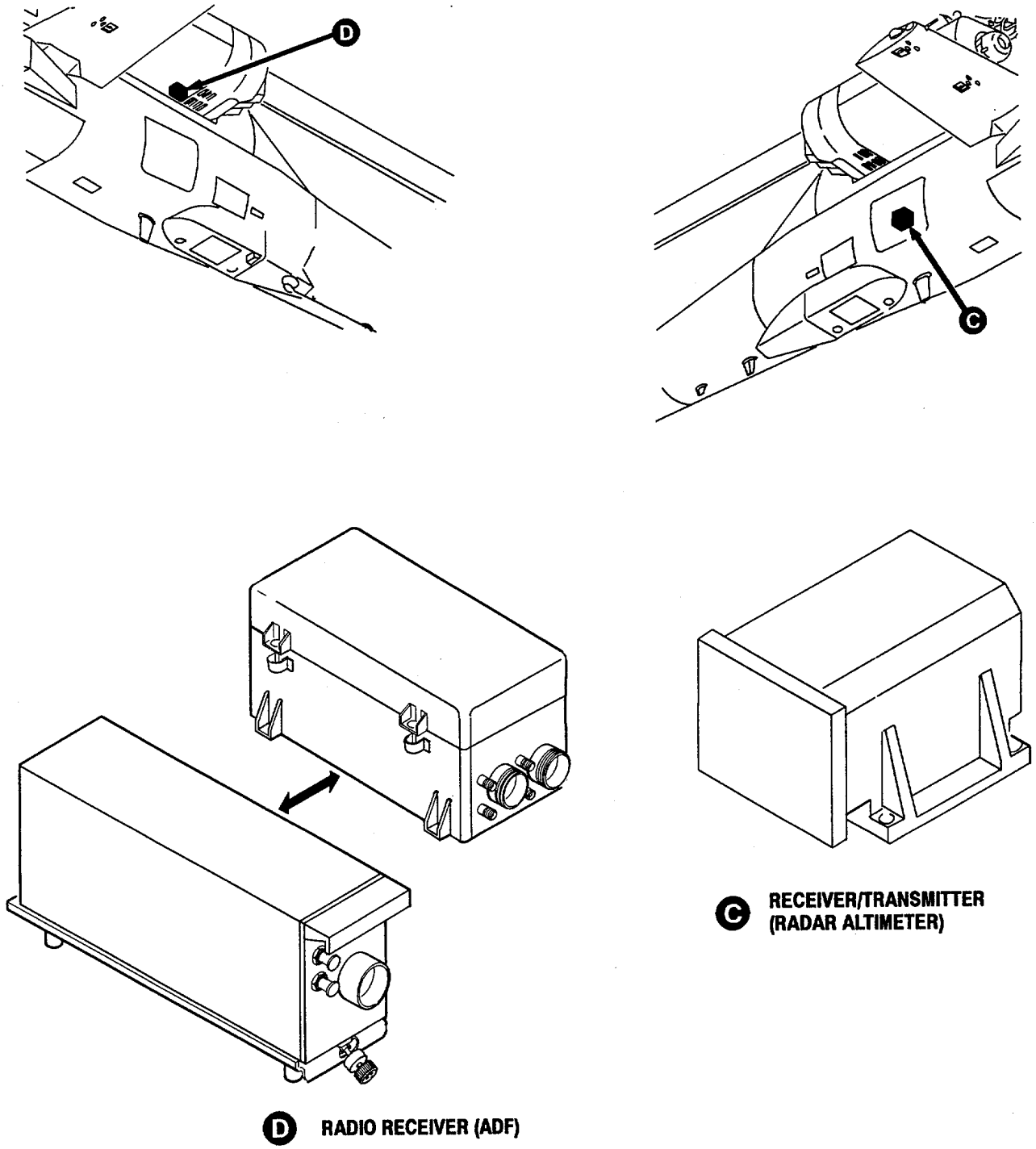

Figure 18-2. Navigation Subsystem Component Location (Sheet 2 of 3)

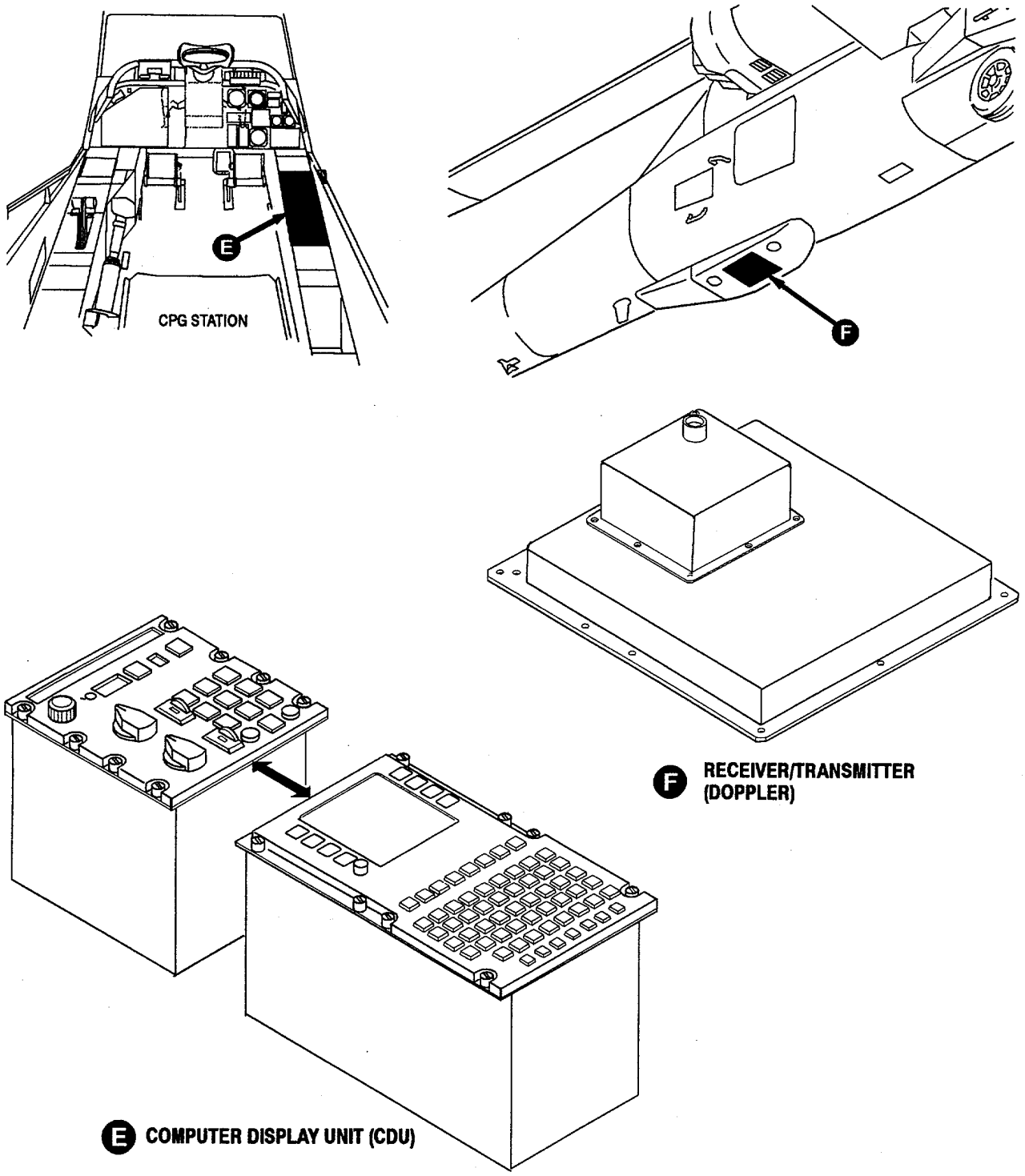

Figure 18-2. Navigation Subsystem Component Location (Sheet 3 of 3)

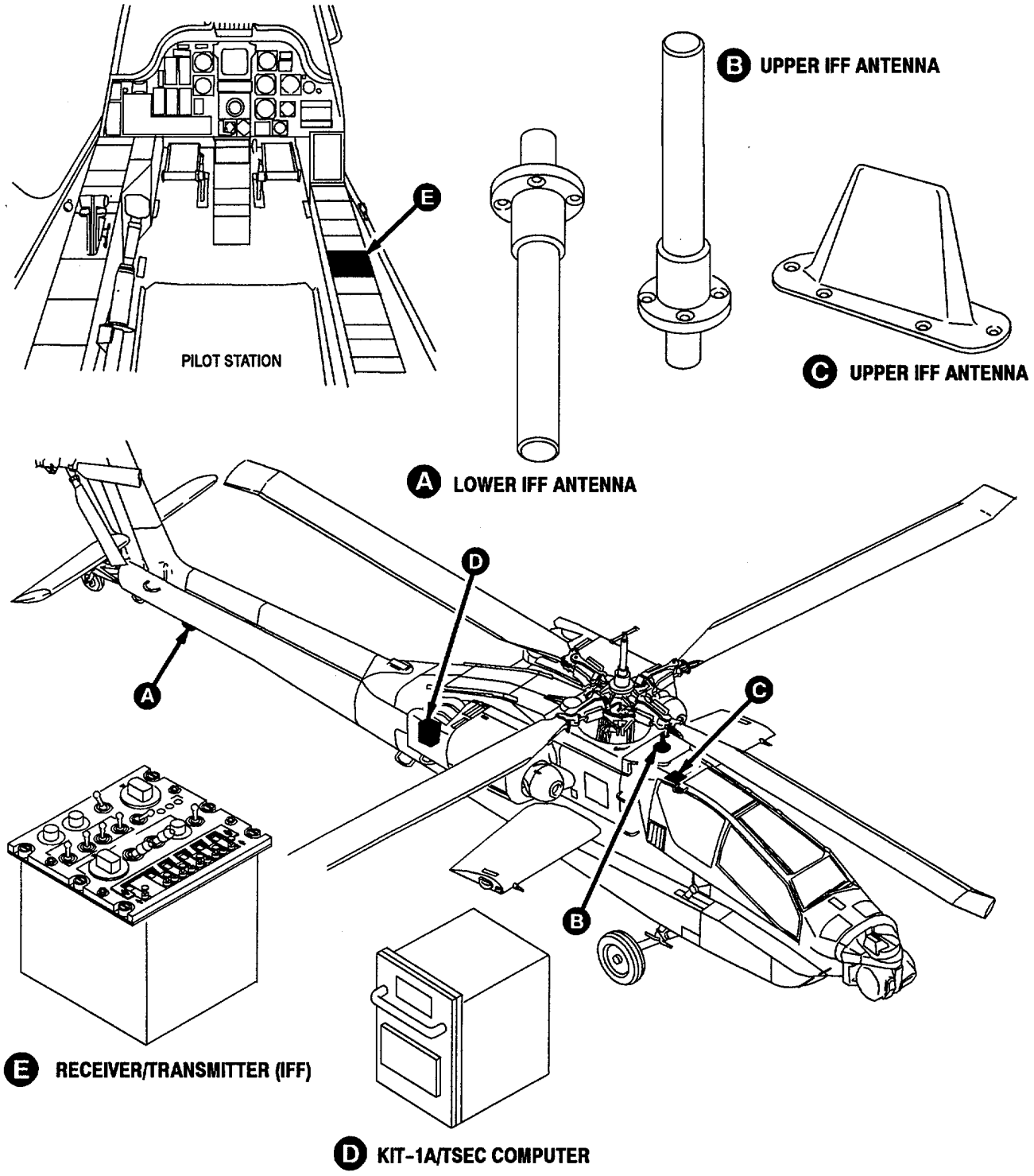

Figure 18-3. IFF Subsystem Component Location

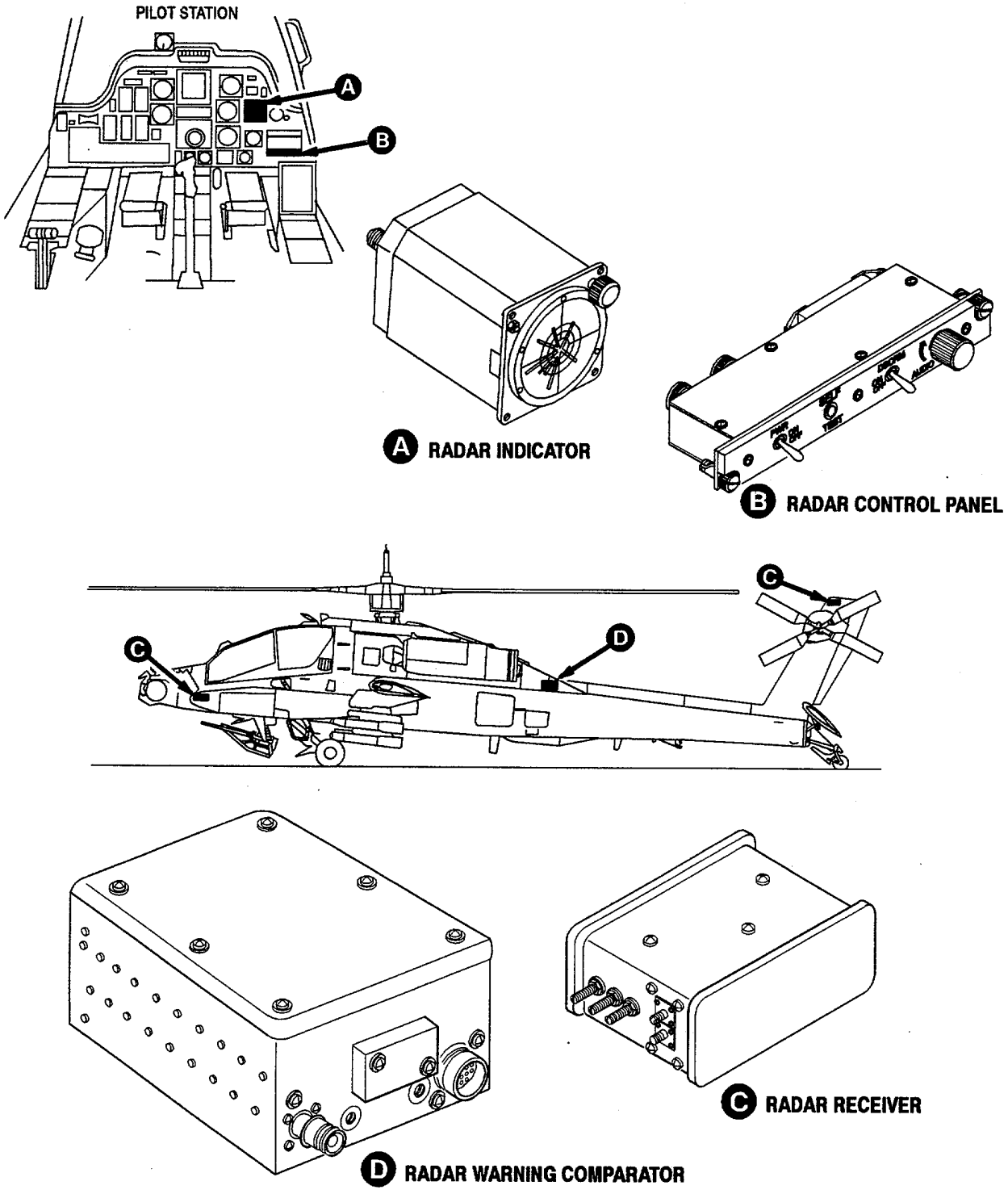

Figure 18-4. Penetration Aids and Countermeasures Subsystem Component Location (Sheet 1 of 4)

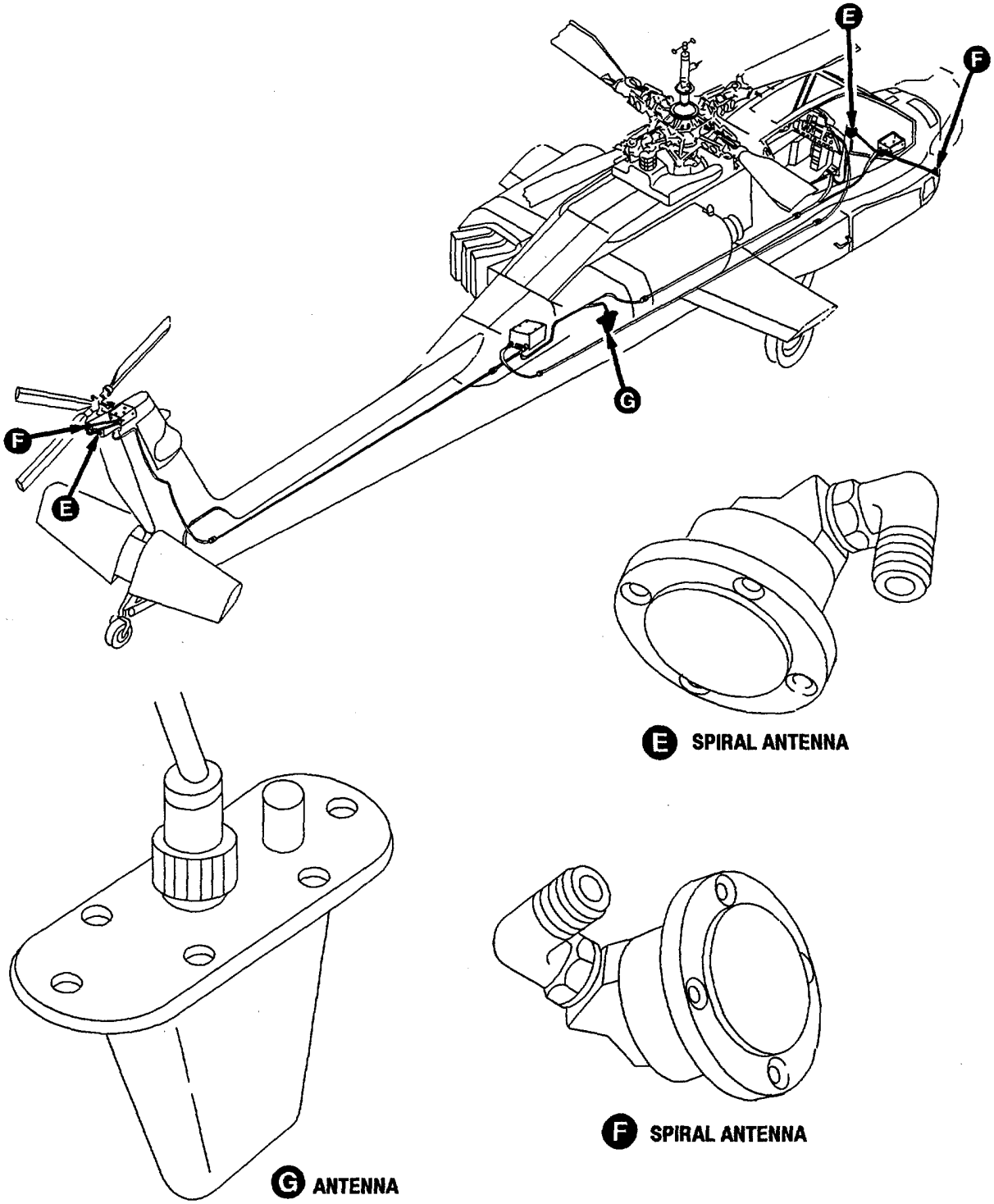

Figure 18-4. Penetration Aids and Countermeasures Subsystem Component Location (Sheet 2 of 4)

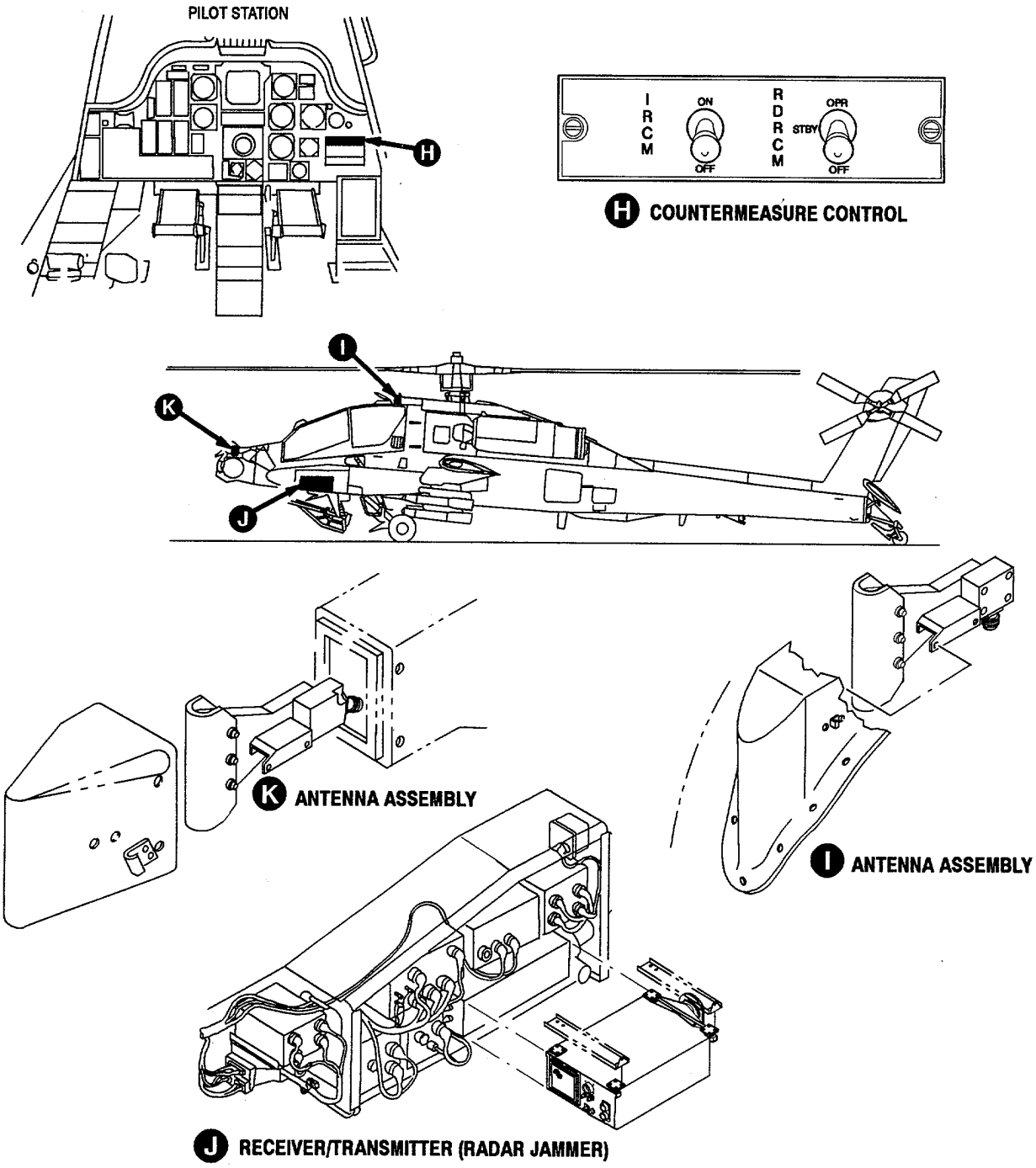

Figure 18-4. Penetration Aids and Countermeasures Subsystem Component Location (Sheet 3 of 4)

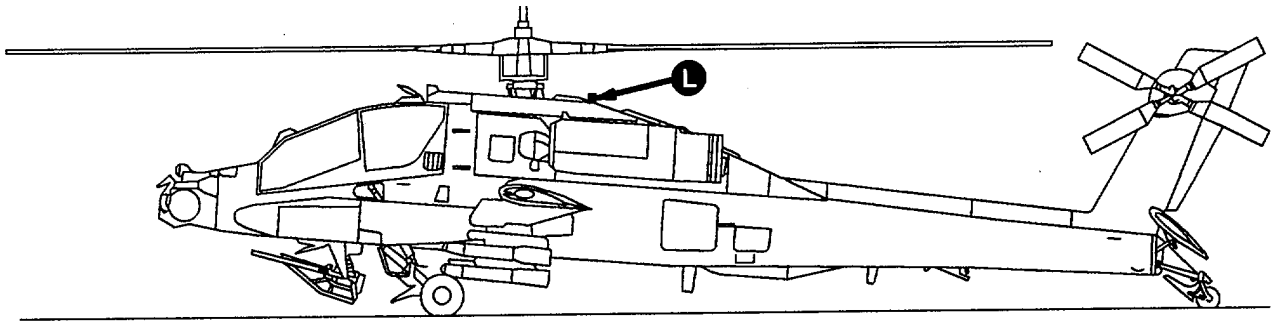

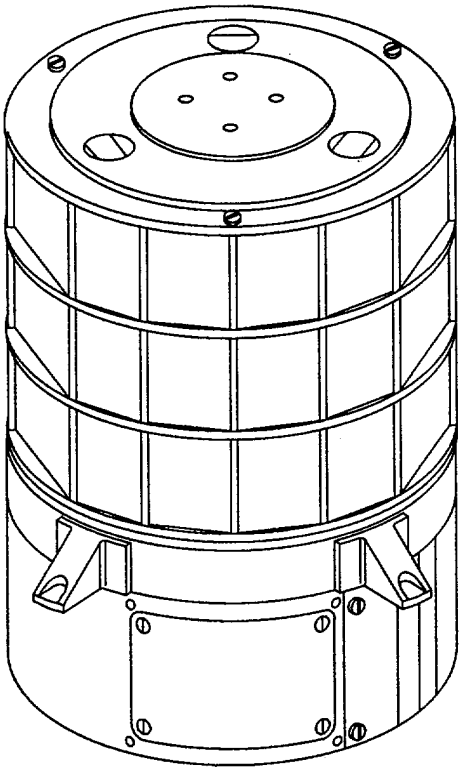

L COUNTERMEASURES TRANSMITTER (I/R JAMMER)

Figure 18-4. Penetration Aids and Countermeasures Subsystem Component Location (Sheet 4 of 4)

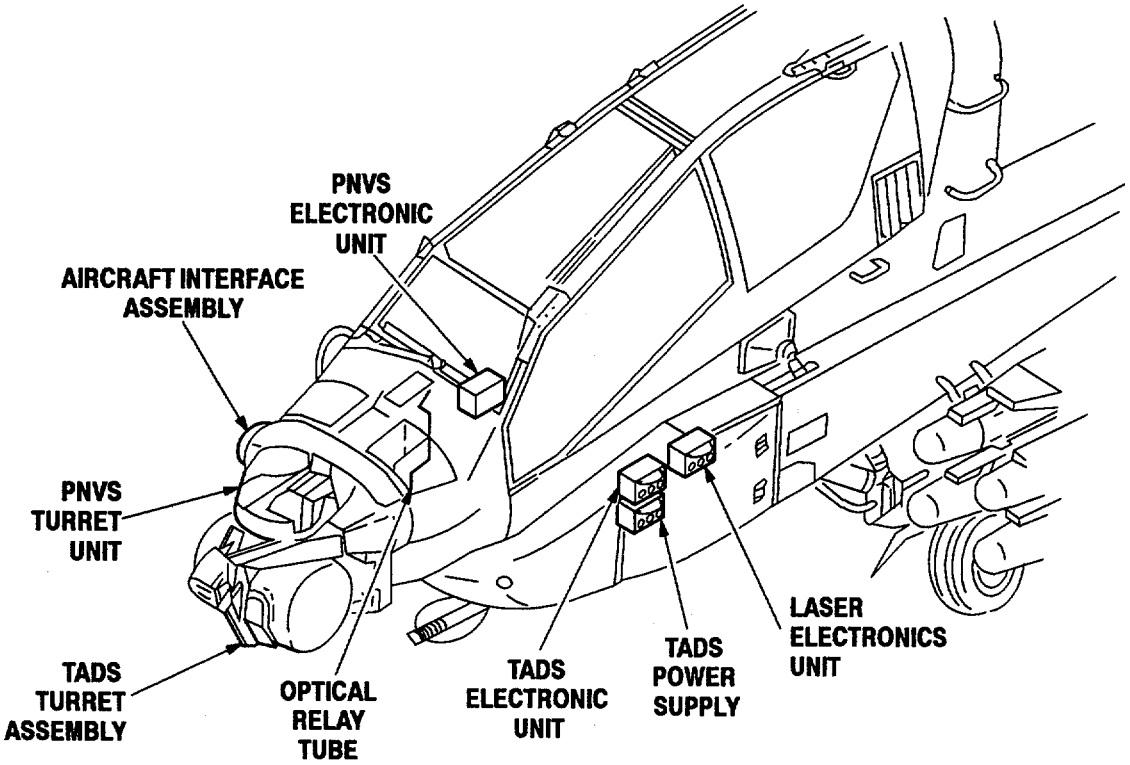

Figure 18-5. TADS/PNVS System Component Location

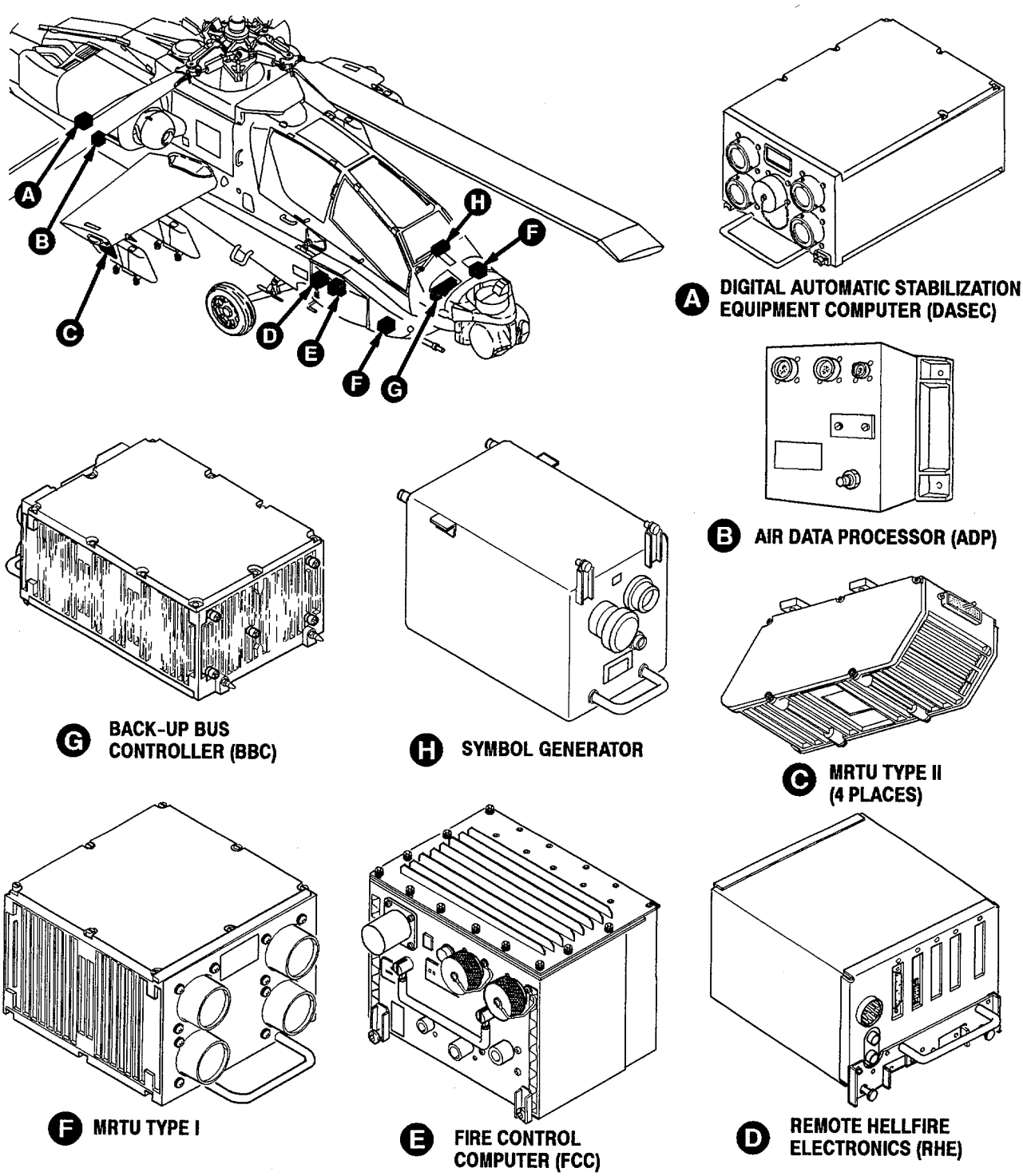

Figure 18-6. Fire Control/Multiplex System Component Location (Sheet 1 of 2)

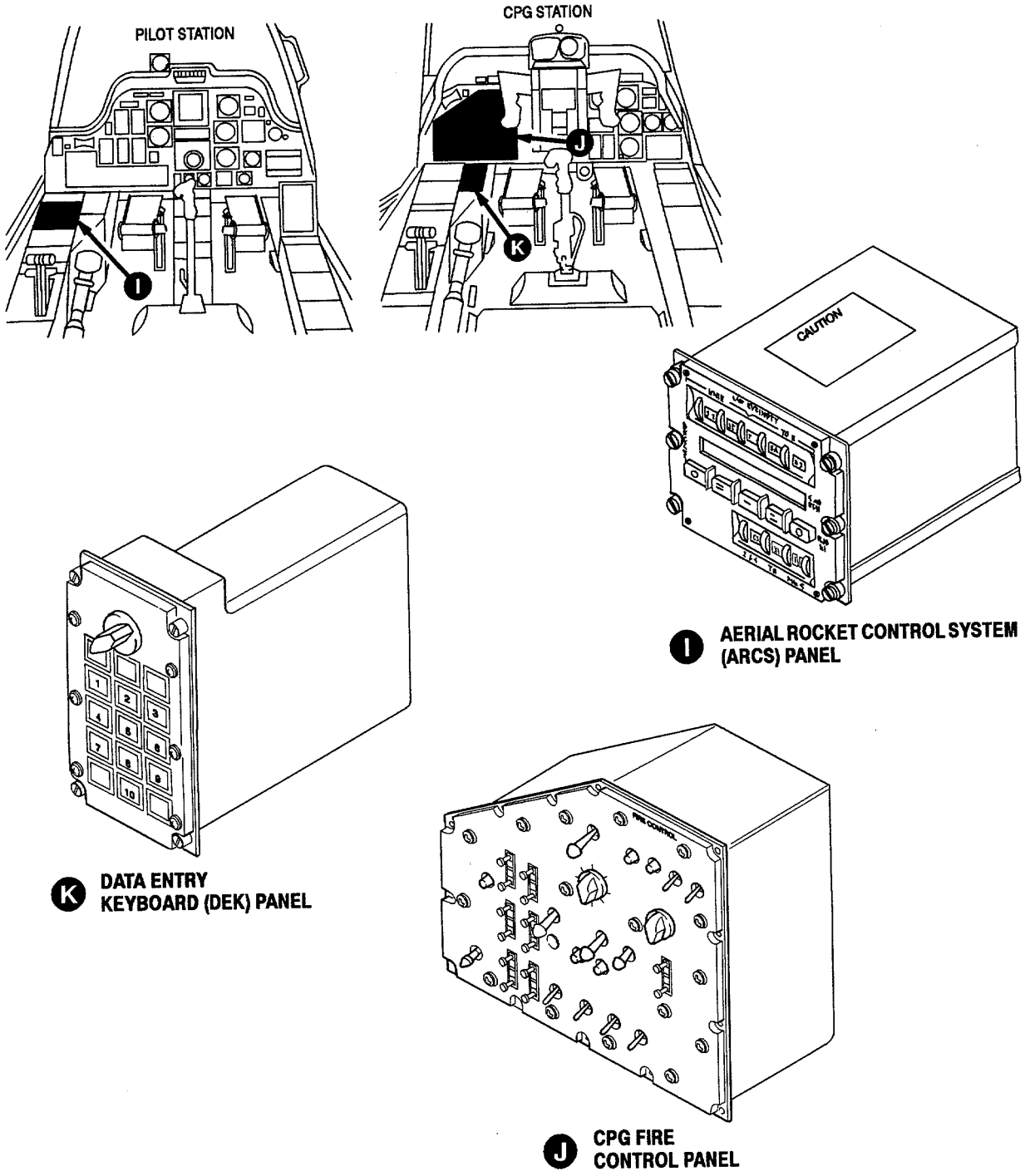

Figure 18-6. Fire Control/Multiplex System Component Location (Sheet 2 of 2)

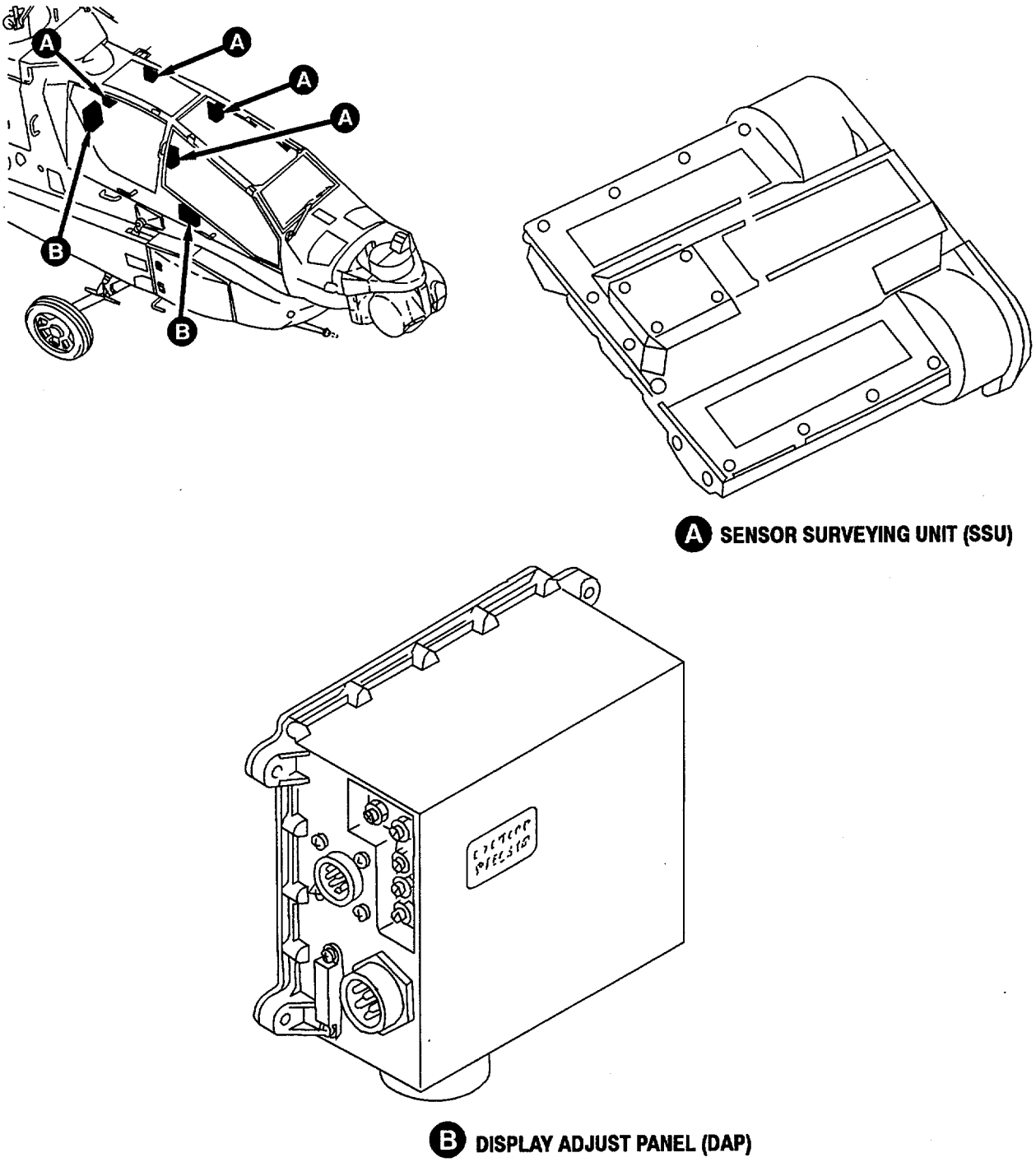

Figure 18-7. IHADSS System Component Location (Sheet 1 of 2)

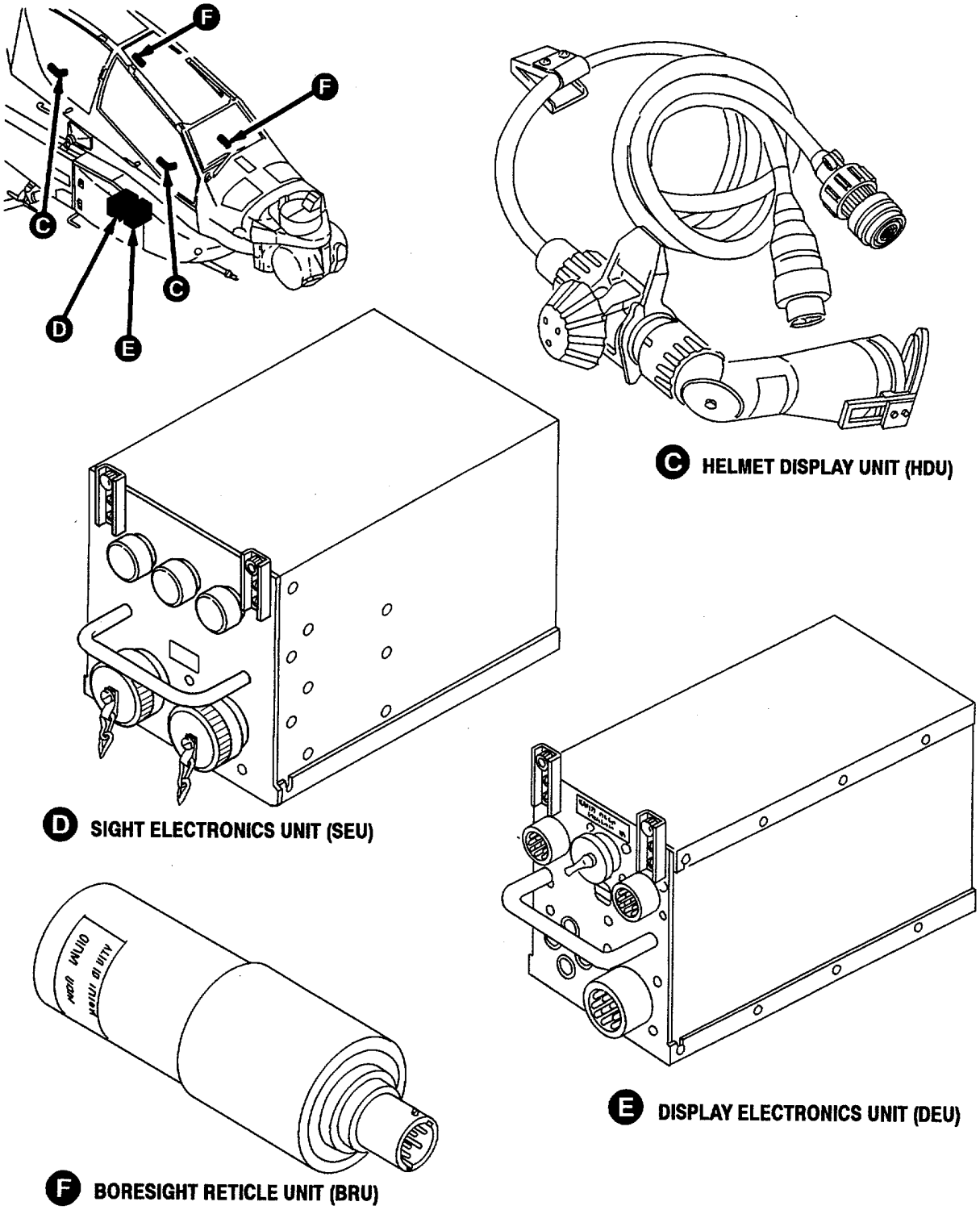

Figure 18-7. IHADSS System Component Location (Sheet 2 of 2)

CHAPTER 19
AREA WEAPONS SYSTEM

BDAR TM PROCEDURES. THE EXPEDIENT REPAIR PROCEDURES IN BDAR TM ARE FOR USE IN COMBAT ONLY. STANDARD MAINTENANCE/REPAIR PROCEDURES ARE TO BE USED AS SOON THEREAFTER AS POSSIBLE.

19-1. SCOPE.

This chapter contains description, location, serviceability criteria, and cannibalization criteria for the Area Weapons System (AWS). Repair of battle damage to the area weapons system during combat may be deferrable depending on the damage or component function.

19-2. SYSTEM DESCRIPTION AND LOCATION.

The area weapons system (Figure 19-1) consists of the following: 30MM automatic gun, gun turret, ammunition handling system, ammunition storage magazine, Gun Control Box (GCB), Turret Control Box (TCB), and Rounds Counter/Magazine Controller (RCMC). The 30MM gun and turret is located on the underside of the aircraft. The ammunition storage magazine is located in the ammo bay. The GCB and TCB are located in the right-hand forward avionics bay. The RCMC is located on the left side of the helicopter behind door L140. Refer to TM 9-1090-208-23-1 for detailed description and operation of specific AWS components.

19-3. ASSESSMENT PROCEDURE.

The components of the area weapons system are susceptible to ballistic damage or operationally induced damage. Assess damage to determine if repair or cannibalization is necessary. Types of major damage that may be encountered during assessment are gouges, nicks, holes, bends, distortions, creases, and dents.

19-4. ERVICEABILITY CRITERIA.

Serviceability criteria provides the AWS with general and specific criteria. When a critical area or component is damaged and the serviceability criteria for the specific type of damage is not presented, TM 9-1090-208-23-1 inspection criteria shall be utilized. When a non-structural component is damaged, most instances will result in deferred repair. When any damage is deferred, periodic inspections shall be performed to monitor damage growth.

19-5. CANNIBALIZATION CRITERIA.

The AWS components that are considered crucial during combat are identified by the mission equipment cannibalization candidates list (Table 19-1). Whenever possible, these components should be cannibalized from other aircraft that are incapable of returning to base or considered unable to fly. his list is a prediction based on evaluations of the components susceptibility of damage, deferrability, and repairability. This is not an exhaustive list of all components which may be cannibalized. When needed, any component may be cannibalized and used provided it is acceptable using the serviceability criteria provided.

Table 19-1.Area Weapon System Cannibalization Candidates

Nomenclature	Part Number
Turret Control Box (Figure 19-1, sheet 1)	7-317222004-25
Rounds Counter/Magazine Controller (Figure 19-1, sheet 1)	7-217231706-603
30MM Gun (Figure 19-1, sheet 2)	387-3000-617
Turret Assembly (Figure 19-1, sheet 3)	7-217221000-611

Table 19-1. Area Weapon System Cannibalization Candidates - Cont

Nomenclature	Part Number
Conveyor Assembly (Figure 19-1, sheet 4)	7-317233000
Ammunition Magazine (Figure 19-1, sheet 4)	7-317236501
Carrier Drive (Figure 19-1, sheet 4)	7-317236502-5
RH Tensioner Assembly (Figure 19-1, sheet 4)	7-317236400-7
LH Tensioner Assembly (Figure 19-1, sheet 4)	7-317236300-3
Gun Control Box (Figure 19-1, sheet 1)	7-217222500-611

19-6. REPAIR PROCEDURE INDEX.

Refer to Chapter 7 for hydraulic tubing assessment/repair. Refer to TM 55-1500-323-24 for electrical wiring repairs. Refer to TM 9-1090-208-23-1 for specific AWS system component removal/installation procedures.

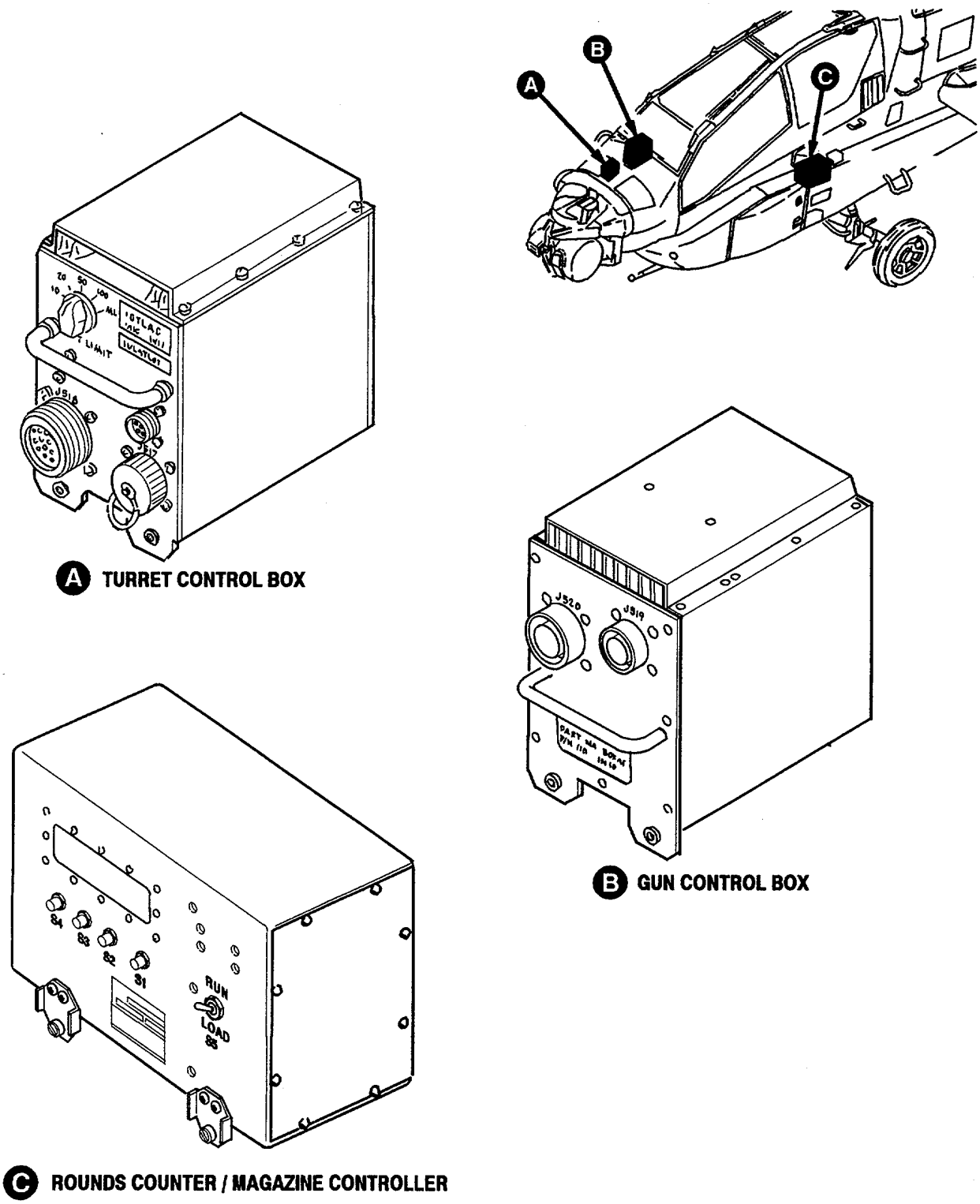

Figure 19-1. Area Weapon System Component Location (Sheet 1 of 4)

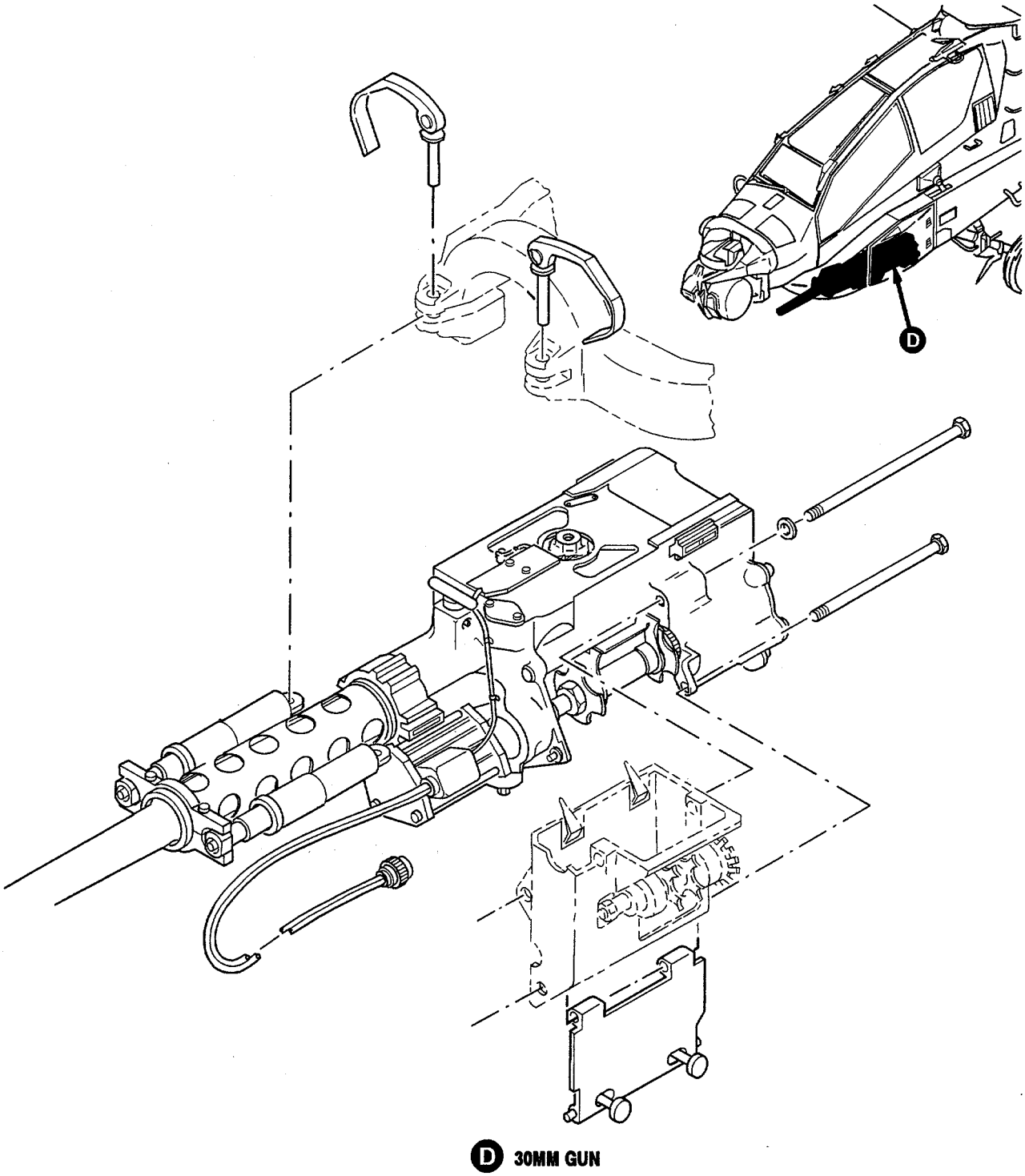

Figure 19-1. Area Weapon System Component Location (Sheet 2 of 4)

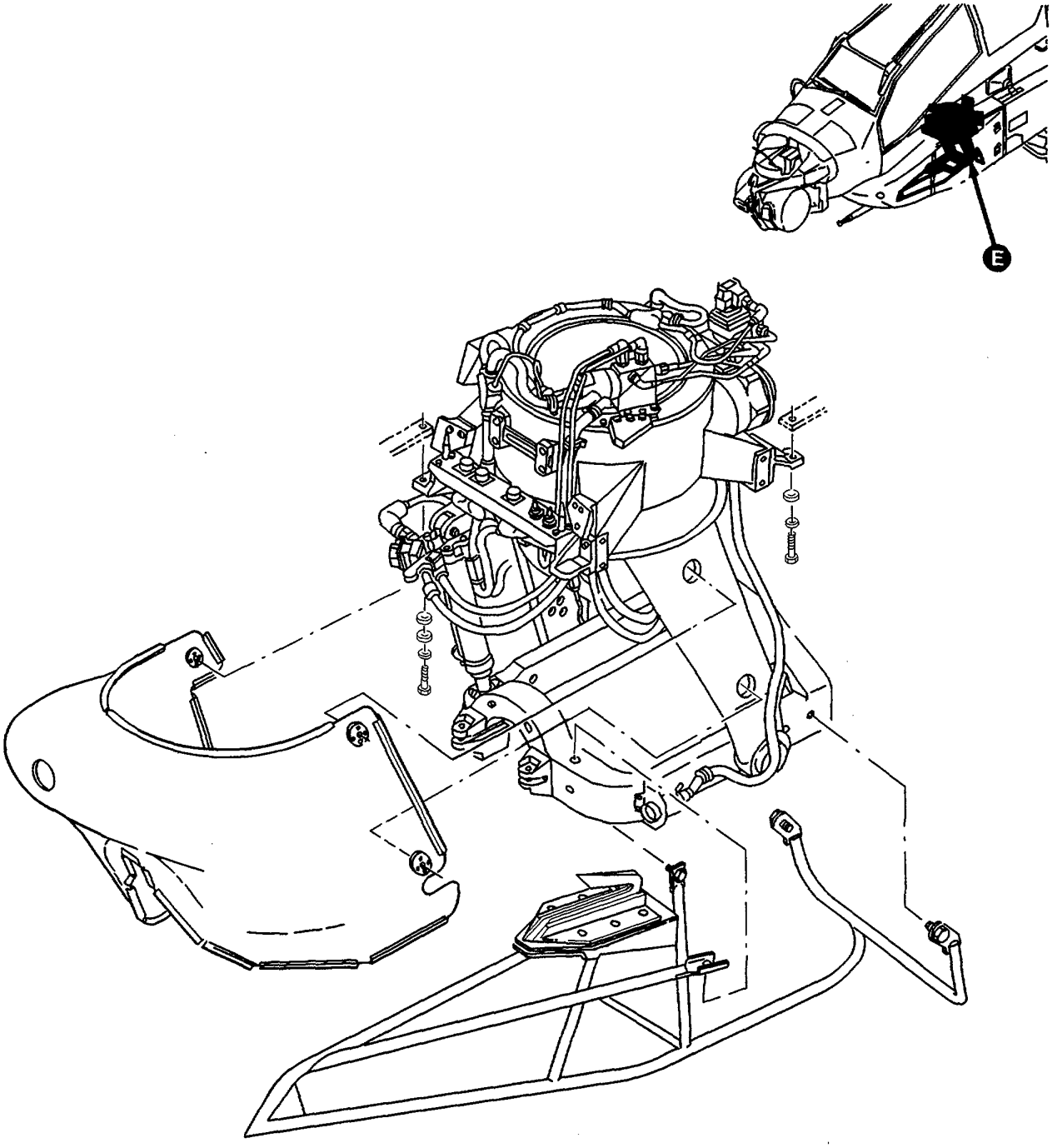

E TURRET ASSEMBLY

Figure 19-1. Area Weapon System Component Location (Sheet 3 of 4)

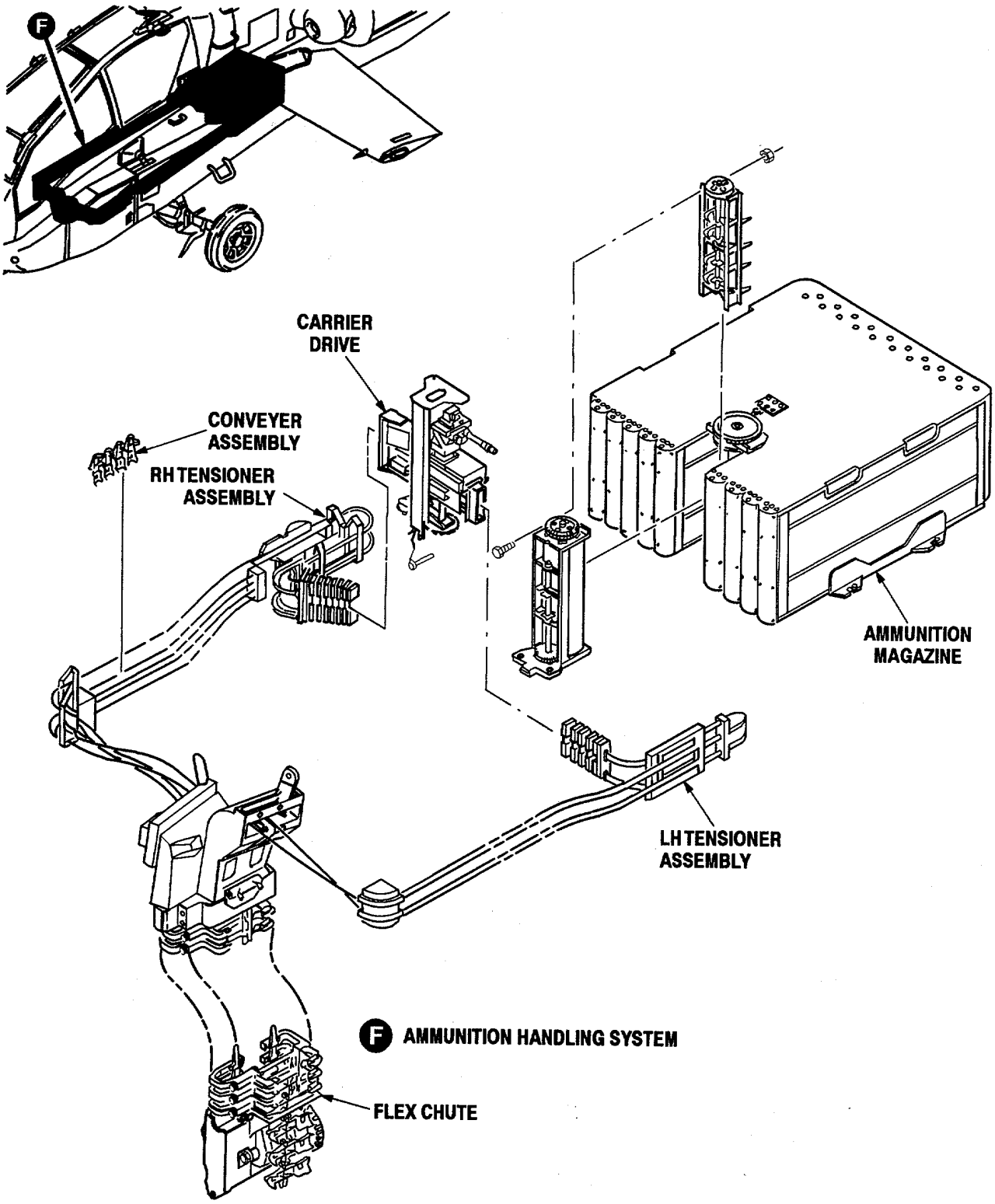

Figure 19-1. Area Weapon System Component Location (Sheet 4 of 4)

APPENDIX A
REFERENCES

BDAR TM PROCEDURES. THE EXPEDIENT REPAIR PROCEDURES IN BDAR TM ARE FOR USE IN COMBAT ONLY. STANDARD MAINTENANCE/REPAIR PROCEDURES ARE TO BE USED AS SOON THEREAFTER AS POSSIBLE.

The following references of the issue in effect are required for use by repair personnel to accomplish the instructions set forth in this TM.

Publication Number	Title
DA Form 2408-13-1/2408-13-1-E	Aircraft Inspection and Maintenance Record
DA Form 2408-13-3	Aircraft Technical Inspection Worksheet
DA Form 2408-14/2408-14-E	Uncorrected Fault Record
DA Form 2408-16/2408-16-E	Aircraft Component Historical Record
DA Form 2408-18/2408-18-E	Equipment Inspection List
DA PAM 738-751	Functional Users Manual for the Army Aviation Maintenance Management System-Aviation (TAMMS-A)
FM 3-5	NBC Decontamination
TB 55-2840-248-20-17	Desert Combat Operations for T700 Series Engines (Operation Desert Shield)
TM 1-1500-204-23	General Aircraft Maintenance Manual
TM 1-1520-238-CL	Operator's Checklist for Army AH-64A Helicopter
TM 1-1520-238-PMS	AH-64A Helicopter 10 Hour/14 Day Inspection Checklist
TM 1-1520-238-T	Aviation Unit and Intermediate Troubleshooting Manual for Army Model AH-64A Helicopter
TM 1-1520-238-10	Operator's Manual for Army AH-64A Helicopter
TM 1-1520-238-23	Aviation Unit and Intermediate Maintenance Manual for Army Model AH-64A Helicopter
TM 9-1090-208-23-1	Aviation Unit and Intermediate Maintenance Manual for M139 Helicopter Armament Subsystem, M230 30-Millimeter Automatic Gun, M140 Inventory and Deployment for Rocket Management Subsystem

Publication Number	Title
TM 9-1270-221-23	Aviation Unit and Intermediate Maintenance Manual for Fire Control System, Helmet Directed: M142
TM 9-1230-476-20-1	Aviation Unit Maintenance Manual for Army Model AH-64A &x Helicopter - Fire Control System
TM 9-1230-476-20-2	Aviation Unit Troubleshooting Manual for Army Model AH-64A Helicopter - Fire Control System
TM 9-1270-476-20-1	Aviation Unit Maintenance Manual for Target Acquisition Designation Sight (TADS) Assembly, AN/ASQ-170, AH-64A Helicopter
TM 11-1520-238-23-1	Aviation Unit and Intermediate Maintenance Manual for Army Model AH-64A Helicopter - Avionics Configuration
TM 11-1520-238-23-2	Aviation Unit and Intermediate Troubleshooting Manual for Army Model AH-64A Helicopter - Avionics Configuration
TM 55-1500-323-24	Installation Practices Aircraft Electric and Electronic Wiring
TM 55-1500-345-23	Painting and Marking of Army Aircraft

APPENDIX B
SPECIAL TOOLS LIST

BDAR TM PROCEDURES. THE EXPEDIENT REPAIR PROCEDURES IN BDAR TM ARE FOR USE IN COMBAT ONLY. STANDARD MAINTENANCE/REPAIR PROCEDURES ARE TO BE USED AS SOON THEREAFTER AS POSSIBLE.

SECTION I. INTRODUCTION

B-1. SCOPE.

This appendix lists special tools you will need to make BDR fixes on the AH-64A helicopter. Items are listed alphabetically by the item name shown in the description column.

B-2. EXPLANATION OF COLUMNS (Section II).

B-2.1. Column (1) - Item Number. This number is assigned to the entry in the listing and is referenced in the narrative instructions to identify the tool, e.g., "Use 1/2 x 3/8-inch drive socket wrench adapter (item 1, App B)".

B-2.2. Column (2) - Item Name. Indicates the name of the item and if required, a description to identify the item.

B-2.3. Column (3) - National Stock Number. This is the National stock number assigned to the item; use it to request or requisition the item.

B-2.4. Column (4) - Part Number. This is the manufacturer's part number assigned to the item.

SECTION II. SPECIAL TOOLS LIST

(1) Item Number	(2) Item Name	(3) National Stock Number	(4) Part Number
1	Adapter, socket wrench, 1/2 x 3/8-inch drive	5120-00-240-8702	A-A-2172
2	Adapter, torque wrench, box end, 5/8 x 3/8-inch drive	5120-01-076-2388	FRES20
3	Adapter, torque wrench, 7/16 x 3/8-inch drive	5120-00-867-5516	XWS2149TYPE4SIZE3
4	Apron, laboratory, light duty	8415-00-234-9253	MC111
5	Bit, Rasp Type		4-BR (CAGE 56571)
6	Bolt, eye (p/o item 32, App B)	5306-01-181-8356	7-262110020
7	Caliper, micrometer, outside, 0.000 - 0.100-inch	5210-00-540-2973	T230R
8	Crowfoot attachment, socket wrench, open end box, 9/16 x 1/4-inch drive	5120-00-541-4074	AN8508-9A
9	Crowfoot attachment, socket wrench, open end box, 11/16 x 3/8-inch drive	5120-00-236-2261	GGG-C-1507
10	Crowfoot attachment, socket wrench, open end, 5/8 x 3/8-inch drive	5120-00-184-8398	FC14
11	Crowfoot attachment, socket wrench, open end, 7/16 x 3/8-inch drive	5120-00-184-8383	FC14
12	Crowfoot attachment, socket wrench, open end, 1-1/2 x 3/8-inch drive	5120-00-184-8412	GGG-C-1507
13	Cutter, milling, end	3455-00-222-3792	F508
14	Cutter, tube, 1/8 - 1-1/8 tube O.D., with deburring tool	5110-00-288-6520	150
15	Drill, pneumatic, portable, 3/8-inch	5130-00-862-2832	CP3008LA1250-100JAANDC94339
16	End mill	4920-01-035-0320	K747-407-11
17	Flaring tool, tube, hand	5120-00-391-0101	402F
18	Gage, thickness, 0.0015 - 0.0250-inch	5210-00-221-1999	F71371
19	Gloves, chemical protective, size 10	8415-00-266-8677	ZZ-G-381
20	Jack, aircraft landing gear, 5-ton	1730-00-540-2343	53D22020
21	Jackscrew, transmission (p/o item 44, App B)	1730-01-181-9271	7-262110015
22	Maintenance kit, electrical connector (Daniels Mfg. Corp.) (Figure B-1)	5935-01-161-5883	DMC664A
23	Repair fixture, blade	4920-01-035-0322	K747-404-1
24	Repair kit, a/c fuel tank (Figure B-2)	4920-01-331-0908	324-4-47194-101
25	Repair kit, emergency wire (Daniels Mfg. Corp.) (Figure B-3)	4920-01-266-7535	DMC895
26	Repair kit, fluid line (Skydyne) (Figure B-4)	4920-01-266-7534	560800 & 560900
27	Repair kit, wire (Raychem Corp) (Figure B-5)	5935-01-254-1688	MK-0015-1
28	Respirator, air filtering, adjustable	4240-00-883-6519	85556
29	Rigging kit, control system	7130-01-181-9270	7-262100003

(1) Item Number	(2) Item Name	(3) National Stock Number	(4) Part Number
30	Router assembly	4920-01-035-0319	K747-409-3
31	Screwdriver, offset, phillips, #1 & #2	5120-00-256-9014	ST012A
32	Sling set kit	1730-01-246-6781	7-262100005-607
33	Sling, air vehicle (p/o item 32, App B)	1730-01-165-6861	7-262110009-601
34	Sling, universal (p/o item 32, App B)	1730-01-166-3543	7-262110010
35	Sling, vertical stabilizer (p/o item 32, App B)	1730-01-220-8476	7-267310016
36	Socket, socket wrench, 1-1/2 x 1/2-inch drive	5120-00-277-1465	B107.1 CL1STA
37	Test kit, electrical (Sikorsky) (Figure B-6)	4920-01-266-7536	70700-20638-041
38	Tool kit, aircraft maintenance	5180-00-003-5267	SC518099CLA13
39	Tool kit, aircraft mechanic's	5180-00-323-4692	SC518099CLA01
40	Tool kit, airframe repairman's	5180-00-323-4876	SC518099CLA02
41	Tool kit, blind rivet	5180-01-201-4979	D-100-MIL-2
42	Tool kit, hydraulic	5180-00-323-4891	SC518099CLA03
43	Tool kit, special	4920-01-182-8811	7-263100001-601
44	Transmission kit, removal	1730-01-183-4432	7-262100006-601
45	Wrench, box, 15/16 & 1-inch	5120-00-204-2670	A-A-1342
46	Wrench, open end, 1-1/4 & 1-5/16-inch	5120-00-277-2321	A-A-1356
47	Wrench, open end, 1-3/16 & 1-1/4-inch	5120-00-155-9367	A-A-1351
48	Wrench, main rotor mast support strut (p/o item 43, App B)	5120-01-351-3464	7-263110002
49	Wrench, torque, click type, 1/4-inch drive, 30 - 150 inch-pound	5120-00-542-4489	GGG-W-00686
50	Wrench, torque, click type, 3/8-inch drive, 150 - 750 inch-pound	5120-00-821-3441	GGG-W-00686
51	Wrench, torque, click type, 1/2-inch drive, 700 - 1600 inch-pound	5120-00-270-3121	TCI-1600
52	Wrench, torque, click type, 3/4-inch drive, 100 - 500 foot-pound	5120-00-902-3550	GGG-W-00686
53	Wrench, torque dial indicator, 3/8-inch drive, 0 - 600 inch-pound	5120-00-288-8865	A-A-2411

COMPARTMENT A

"Warning: Foreign object damage FOD can abort a mission or cause loss of life. Make sure all tools are accounted for after using this kit."

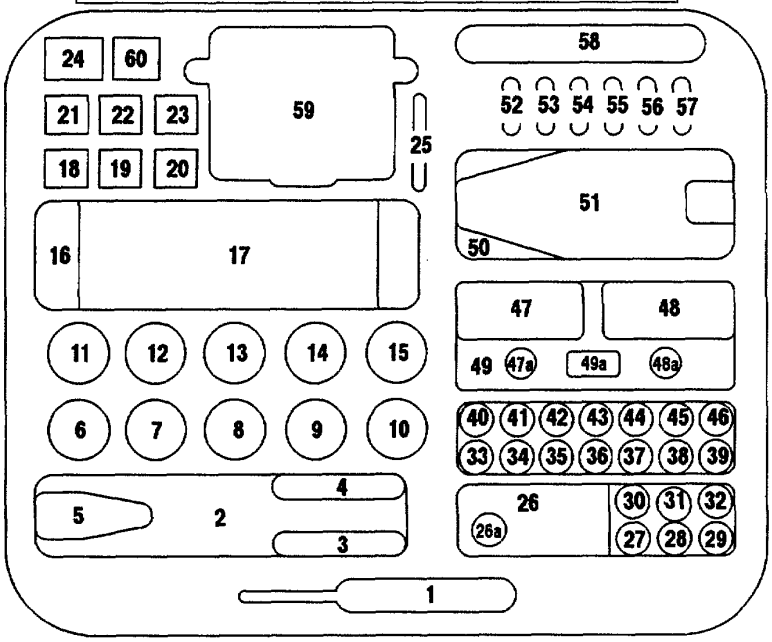

CONTENTS CHART

ITEM	DESCRIPTION
1.	9208 (PROTO) 1/4 NUT DRIVER
2.	M22520/1-01 CRIMPING TOOL FRAME
3.	M22520/3-1 IN-SERVICE INSPECTION GAGE
4.	74008 (ALLEN) 9/64 HEX WRENCH
5.	M22520/1-05 UNIVERSAL HEAD
6.	M22520/1-02 TURRET HEAD
7.	M22520/1-03 TURRET HEAD
8.	M22520/1-04 TURRET HEAD
9.	M22520/1-12 TURRET HEAD
10.	M22520/1-13 TURRET HEAD
11.	M22520/1-14 TURRET HEAD
12.	TH122 (DANIELS) TURRET HEAD
13.	TH343 (DANIELS) TURRET HEAD
14.	TH484 (DANIELS) TURRET HEAD
15.	G2P330 (DANIELS) or M22520/31-02 SINGLE POSITION HEAD-USE WITH ITEM A17
16.	M22520/5-01 CRIMPING TOOL FRAME
17.	GS200-1 (DANIELS) or M22520/31-01 CRIMPING TOOL-USE WITH ITEM A15
18.	M22520/5-17 DIE SET
19.	M22520/5-25 DIE SET
20.	M22520/5-29 DIE SET
21.	M22520/5-53 DIE SET
22.	Y219 (DANIELS) DIE SET
23.	Y289 (DANIELS) DIE SET
24.	M22520/5-100 DIE SET
25.	HX3-82 (DANIELS) DIE REMOVAL TOOL
26.	M22520/2-01 CRIMPING TOOL FRAME with
26a.	K127-2 (DANIELS) POSITIONER attached
27.	K25 (DANIELS) POSITIONER
28.	K187 (DANIELS) POSITIONER
29.	K330-3 (DANIELS) POSITIONER
30.	K600 (DANIELS) POSITIONER
31.	K642 (DANIELS) POSITIONER
32.	M22520/2-02 POSITIONER
33.	M22520/2-04 POSITIONER
34.	M22520/2-06 POSITIONER
35.	M22520/2-07 POSITIONER
36.	M22520/2-08 POSITIONER
37.	M22520/2-09 POSITIONER
38.	M22520/2-10 POSITIONER
39.	M22520/2-11 POSITIONER
40.	M22520/2-13 POSITIONER
41.	M22520/2-14 POSITIONER
42.	M22520/2-15 POSITIONER
43.	M22520/2-24 POSITIONER
44.	K496 (DANIELS) or M22520/2-32 POSITIONER
45.	K323 (DANIELS) or M22520/2-34 POSITIONER
46.	K473 (DANIELS) or M22520/2-36 POSITIONER
47.	45-162 (IDEAL) COAXIAL STRIPPER
47a.	SPARE BLADES FOR 45-162 (IDEAL) COAXIAL STRIPPER
48.	45-163 (IDEAL) COAXIAL STRIPPER
48a.	SPARE BLADES FOR 45-163 (IDEAL) COAXIAL STRIPPER
49.	45-164 (IDEAL) COAXIAL STRIPPER
49a.	SPARE BLADES FOR 45-164 (IDEAL) COAXIAL STRIPPER
50.	L-9038 (IDEAL) WIRE STRIPPER HANDLE
51.	L-9039 (IDEAL) WIRE STRIPPER HANDLE
52.	45-1608-1 (IDEAL) BLADE SET USE WITH ITEM A51
53.	45-1654-1 (IDEAL) BLADE SET USE WITH ITEM A50
54.	45-1610-1 (IDEAL) BLADE SET USE WITH ITEM A51
55.	45-1611-1 (IDEAL) BLADE SET USE WITH ITEM A50
56.	L-5562 (IDEAL) BLADE SET USE WITH ITEM A51
57.	L-5563 (IDEAL) BLADE SET USE WITH ITEM A50
58.	45-123 (IDEAL) WIRE CUTTER
59.	DMC875 (DANIELS) COAXIAL TRIM KIT
60.	M22520/5-11 DIE SET

Figure B-1. Electrical Connector Maintenance Kit (5935-01-161-5883) (Sheet 1 of 4)

ITEM A59 CONTENTS CHART (DMC875 COXIAL TRIM KIT)

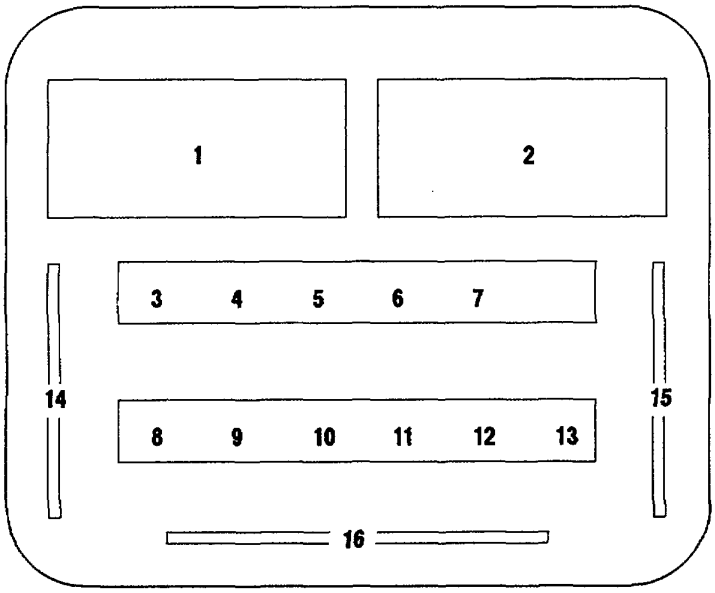

ITEM	DESCRIPTION
1.	WS-1 (DANIELS) TRIM TOOL
2.	WS-2 (DANIELS) TRIM TOOL
3.	WS-3 (DANIELS) TRIM TOOL
4.	WS-4 (DANIELS) TRIM TOOL
5.	WS-5 (DANIELS) TRIM TOOL
6.	WS-6 (DANIELS) TRIM TOOL
7.	WS-7 (DANIELS) TRIM TOOL
8.	WS-8 (DANIELS) TRIM TOOL
9.	WS-9 (DANIELS) TRIM TOOL
10.	WS-10 (DANIELS) TRIM TOOL
11.	WS-11 (DANIELS) TRIM TOOL
12.	WS-12 (DANIELS) TRIM TOOL
13.	WS-13 (DANIELS) TRIM TOOL
14.	WS-16 (DANIELS) RAZOR BLADE
15.	WS-16 (DANIELS) RAZOR BLADE
16.	WS-14 (DANIELS) RAZOR GUARD

Figure B-1. Electrical Connector Maintenance Kit (5935-01-161-5883) (Sheet 3 of 4)

COMPARTMENT B

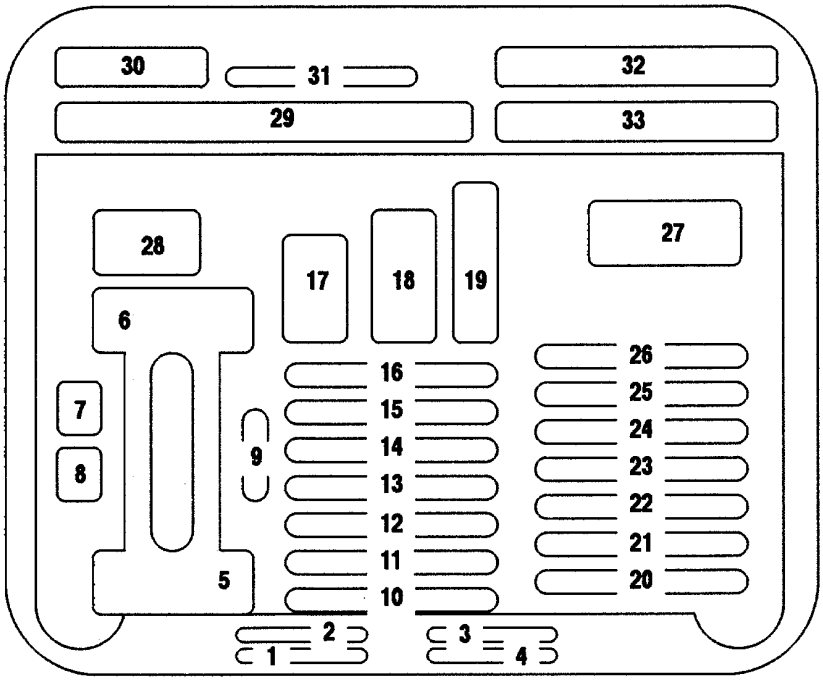

CONTENTS CHART

ITEM	DESCRIPTION
1.	CG12 (DANIELS) CONTACT GAGE
2.	CG12 (DANIELS) CONTACT GAGE
3.	CG12 (DANIELS) CONTACT GAGE
4.	CG12 (DANIELS) CONTACT GAGE
5.	THOOOIPOOO (HDL) w/TM0161NP01 (TIP) (HUGHES)
6.	THOOOIPOOO (HDL) w/TM0161NS01 (TIP) (HUGHES)
7.	TMO161GS00 (HUGHES) GAGE
8.	TMO161GP00 (HUGHES) GAGE
9.	TW000SW00 (HUGHES) SPANNER WRENCH (4 SUPPLIED)
10.	M81969/8-05 (MS27495A20) INSTALLING TOOL
11.	M81969/8-01 (MS27495A22M) INSTALLING TOOL
12.	M81969/8-10 (MS27495R12) REMOVAL TOOL
13.	M81969/8-08 (MS27495R16) REMOVAL TOOL
14.	M81969/8-06 (MS27495R20) REMOVAL TOOL
15.	M81969/8-02 (MS27495R22M) REMOVAL TOOL
16.	DAK83-20 (DANIELS) INSTALLING TOOL
17.	M81969/16-04 or 81515-23 (DEUTSCH) INSTALLING/REMOVAL TOOL (10 SUPPLIED)

CONTENTS CHART

ITEM	DESCRIPTION
18.	M81969/16-01 or 81515-20 (DEUTSCH) INSTALLING/REMOVAL TOOL (10 SUPPLIED)
19.	M81969/16-02 or 81515-16 (DEUTSCH) INSTALLING/REMOVAL TOOL (5 SUPPLIED)
20.	DRK83-12 (DANIELS) REMOVAL TOOL
21.	DRK83-16 (DANIELS) REMOVAL TOOL
22.	DRK83-20 (DANIELS) REMOVAL TOOL
23.	DRK145 (DANIELS) REMOVAL TOOL
24.	DAK238-22 (DANIELS) INSTALLING TOOL
25.	DRK238-22 (DANIELS) REMOVAL TOOL
26.	DRK246 (DANIELS) REMOVAL TOOL
27.	M81969/16-03 or 81515-12 (DEUTSCH) INSTALLING/REMOVAL TOOL (5 SUPPLIED)
28.	M15570-22-1 (DEUTSCH) INSTALLATION REMOVAL TOOL (5 SUPPLIED)
29.	BT-SJ-468 (DANIELS) SOFT JAW PLIERS
30.	CTJ-R12 (DEUTSCH) MODULE REMOVAL TOOL
31.	CTJ-R06 (DEUTSCH) MODULE REMOVAL TOOL
32.	BT-BS-609 (DANIELS) STRAP WRENCH
33.	BT-A-6010 (DANIELS) REPLACEMENT STRAP USE WITH ITEM B32

M102-135

Figure B-1. Electrical Connector Maintenance Kit (5935-01-161-5883) (Sheet 3 of 4)

COMPARTMENT C

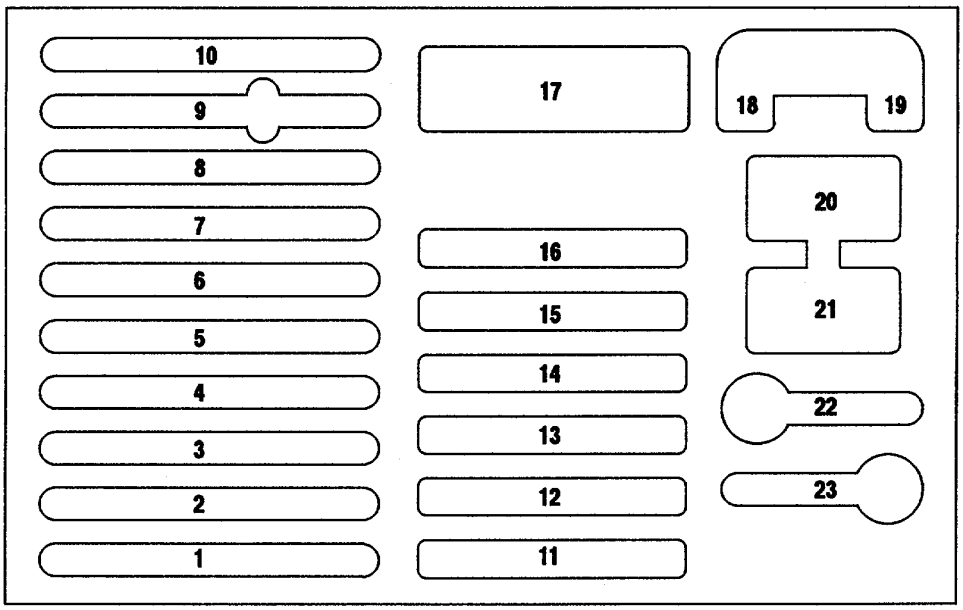

CONTENTS CHART

ITEM	DESCRIPTION
1.	M81969/17-03 (MS24256A20) INSTALLING TOOL
2.	M81969/19-09 (MS24256R12) REMOVAL TOOL
3.	M81969/19-08 (MS24256R16) REMOVAL TOOL
4.	M81969/19-07 (MS24256R20) REMOVAL TOOL
5.	DRK36 (DANIELS) REMOVAL TOOL
6.	DAK39 (DANIELS) INSTALLING TOOL
7.	DRK39 (DANIELS) REMOVAL TOOL with DRK39-2A TIP (PIN) ASSEMBLY DRK39-2 TIP (SOCKET) ASSEMBLY
8.	4-1150 (DANIELS) 6 INCH SCALE w/WIRE GAUGE
9.	DAK96-20 (DANIELS) INSTALLING TOOL
10.	DAK409 (DANIELS) REMOVAL TOOL or AD-1464 (RAYCHEM) REMOVAL TOOL
11.	M81969/18-01 (MS17805) INSTALLING TOOL
12.	M81969/20-01 (MS17806) REMOVAL TOOL
13.	M81969/18-02 INSTALLING TOOL
14.	M81969/20-02 REMOVAL TOOL

CONTENTS CHART

ITEM	DESCRIPTION
15.	DAK145 (DANIELS) INSTALLING TOOL
16.	DRK81-20 (DANIELS) REMOVAL TOOL with 6783 PROBE FOR SIZE 20 PIN 6784 PROBE FOR SIZE 20 SOCKET
17.	M-7LB (ELECTRO OPTIX) ILLUMINATED MAGNIFIER
18.	KTD-81 (KINGS) or WS-15 (DANIELS) DIELECTRIC TRIM JIG
19.	KTD-24 (KINGS) or WS-18 (DANIELS) JACKET TRIM JIG
20.	294-540 (AMPHENOL) INSTALLING TOOL (2 SUPPLIED)
21.	294-541 (AMPHENOL) REMOVAL TOOL (2 SUPPLIED)
22.	DRK300-1SA (DANIELS) REMOVAL TOOL HANDLE
23.	DRK105-20-2 (DANIELS) REMOVAL TOOL PROBE DRK105-22-2 (DANIELS) REMOVAL TOOL PROBE DRK105-22M-2 (DANIELS) REMOVAL TOOL PROBE DRK110-12-2 (DANIELS) REMOVAL TOOL PROBE DRK110-16-2 (DANIELS) REMOVAL TOOL PROBE DRK110-20-2 (DANIELS) REMOVAL TOOL PROBE DRK130-16-2 (DANIELS) REMOVAL TOOL PROBE DRK130-20-2 (DANIELS) REMOVAL TOOL PROBE

Figure B-1. Electrical Connector Maintenance Kit (5935-01-161-5883) (Sheet 4 of 4)

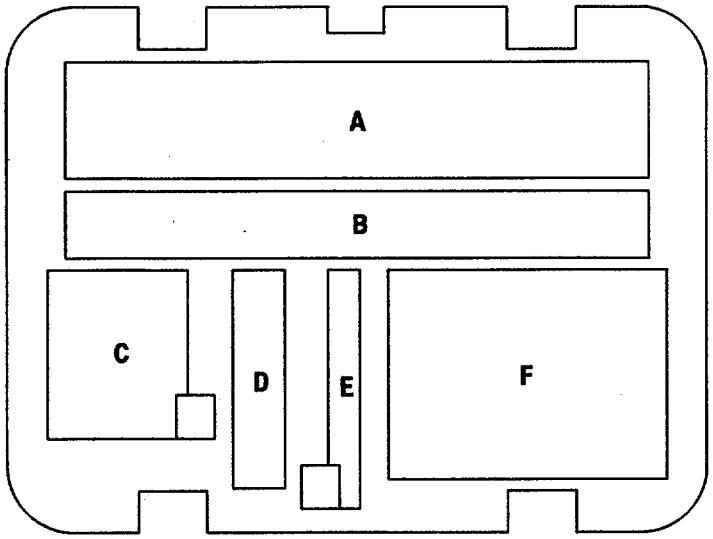

COVER

PART NO.	NOMENCLATURE	QTY	LOCATION
_ _ _ _ _ _	CLOTH SHOP TOWELS	8	A
_ _ _ _ _ _	DISPOSABLE GLOVES	10 PAIR	B
_ _ _ _ _ _	ABRASIVE CLOTH	18	C
EFC CODE 290N	REPAIR FABRIC	11	D
_ _ _ _ _ _	WOODEN TONGUE DEPRESSORS	10	E
EFC 324-3-47180-101	RUBBER REPAIR PLUG	8	F

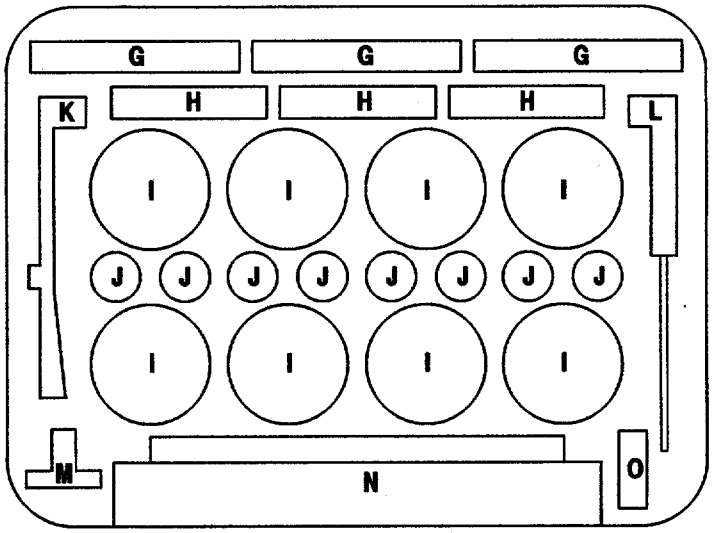

BASE

PART NO.	NOMENCLATURE	QTY	LOCATION
NSN 5340-00-720-8863	5 INCH SEALING CLAMP	3	G
NSN 5340-00-720-8864	3 INCH SEALING CLAMP	3	H
82C93	PREPOLIMER	8	I
82C94	CURATIVE AGENT	8	J
CLAUSS 4268KBL	SCISSORS	1	K
HYDE 63110 & 62630	MILL KNIFE & BLADE	1	L
EFC 324-3-47179-101	ADAPTER FOR ABRASIVE DISC	1	M
_ _ _ _ _ _	CAB-O-SIL FILLER	8	N
_ _ _ _ _ _	ABRASIVE CLOTH DISC	10	O

Figure B-2. A/C Fuel Tank Repair Kit (4920-01-331-0908)

COMPARTMENT A

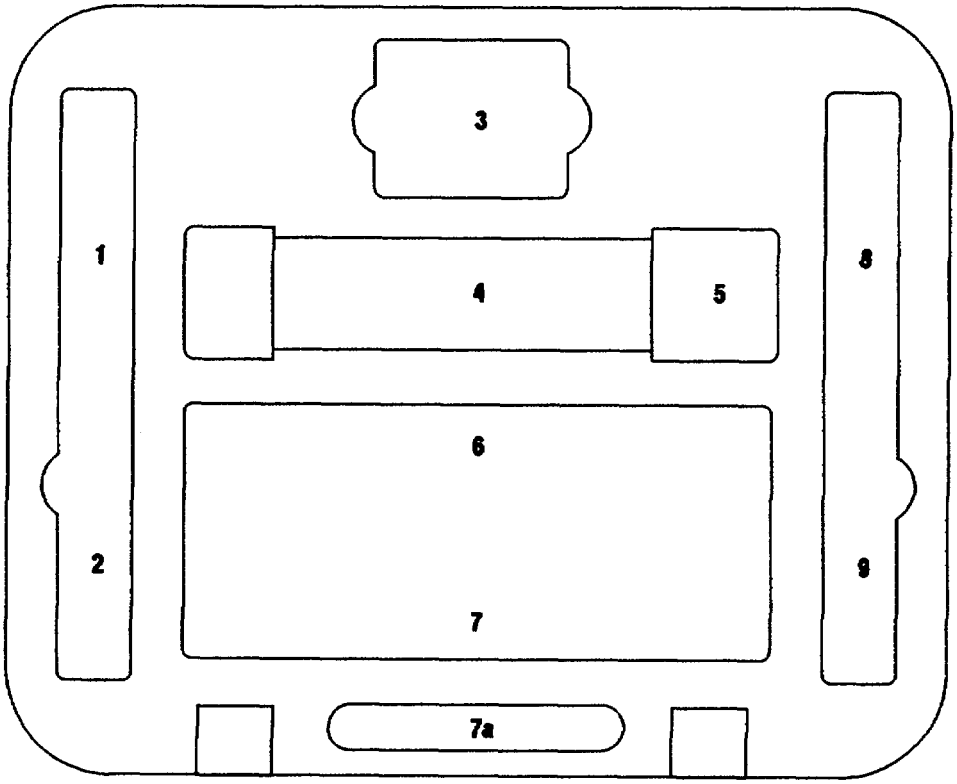

CONTENTS CHART

ITEM	DESCRIPTION
1.	45-123 (IDEAL) WIRE CUTTER
2.	45-1610 (IDEAL) WIRE STRIPPER
3.	HRM/01-04-03 (RAYCHEM) NO. 12 AWG WIRE
4.	M-7LB (ELECTRO OPTIC) ILLUMINATED MAGNIFIER
5.	MX-992/U (FULTON) FLASHLIGHT
6.	GMT232 (DANIELS) CRIMP TOOL
7.	27/FM (FLUKE) DIGITAL MULTIMETER WITH TL70 (FLUKE) TEST LEADS
7a.	ALLIGATOR CLIPS (2 SUPPLIED) USE WITH ITEM NO. 7
8.	D202-5 (KLEIN) DIAGONAL PLIERS
9.	45-1654 (IDEAL) WIRE STRIPPERS

Figure B-3. Emergency Wire Repair Kit (4920-01-266-7535) (Sheet 1 of 2)

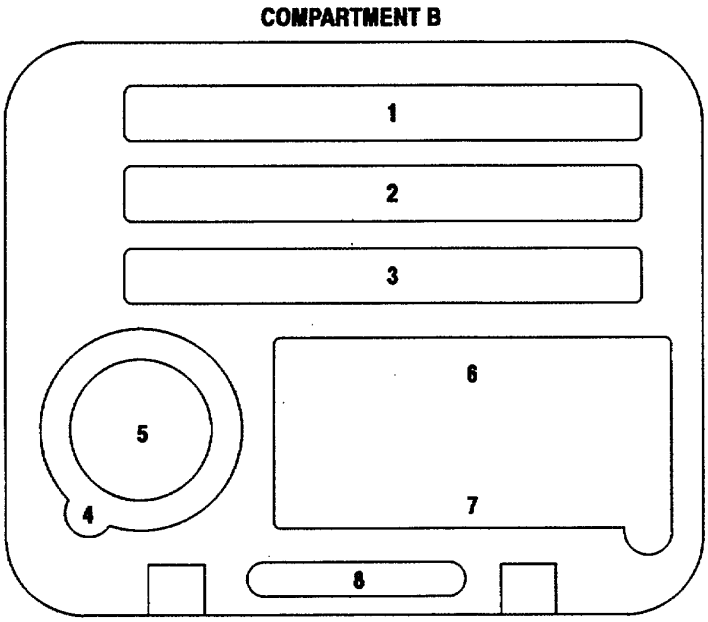

CONTENTS CHART

ITEM	DESCRIPTION
1.	D-505-0010 (RAYCHEM) NO. 12 AWG WIRE SEGMENTS (30 SUPPLIED)
2.	D-505-0009 (RAYCHEM) NO. 16 AWG WIRE SEGMENTS (60 SUPPLIED)
3.	D-505-0008 (RAYCHEM) NO. 20 AWG WIRE SEGMENTS (90 SUPPLIED)
4.	HM-350 (SOUTHEAST TAPE) TEFLON TAPE
5.	HRM/01-04-01 (RAYCHEM) NO. 20 AWG WIRE
6.	HRM/01-01-08 (RAYCHEM) ASSORTED SPLICES
7.	MS3367-1-0 CABLE TIES (40 SUPPLIED)
8.	4-1372 (DANIELS) ELECTRICIAN KNIFE

Figure B-3. Emergency Wire Repair Kit (4920-01-266-7535) (Sheet 2 of 2)

CONTENTS-COVER TRAY (TOOL CASE)

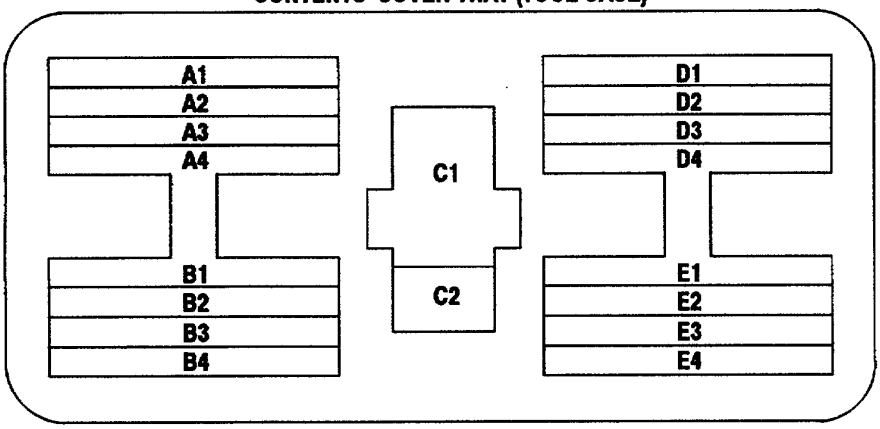

PART NUMBER	PART NUMBER	QTY	LOCATION
MS21902J6	UNION-6	50	A1-A4
MS21902J4	UNION-4	50	B1-B2
MS21900J8	ADAPTOR AN-MS-8-8	14	B3-B4
MS21902J10	UNION-10	12	C1
MS21902J12	UNION-12	2	C2

PART NUMBER	PART NUMBER	QTY	LOCATION
MS21902J5	UNION-5	12	D1
MS21902J8	UNION-8	14	D2-D3
MS21900J5	ADAPTOR AN-MS-5-5	10	D4
MS21900J4	ADAPTOR AN-MS-4-4	16	E1
MS21900J6	ADAPTOR AN-MS-6-6	14	E2-E3
MS21915-5-4	REDUCER-5 TO -4	12	E4

Figure B-4. Fluid Line Repair Kit (4920-01-266-7534) (Sheet 1 of 3)

CONTENTS-BASE CHART (TOOL CASE)

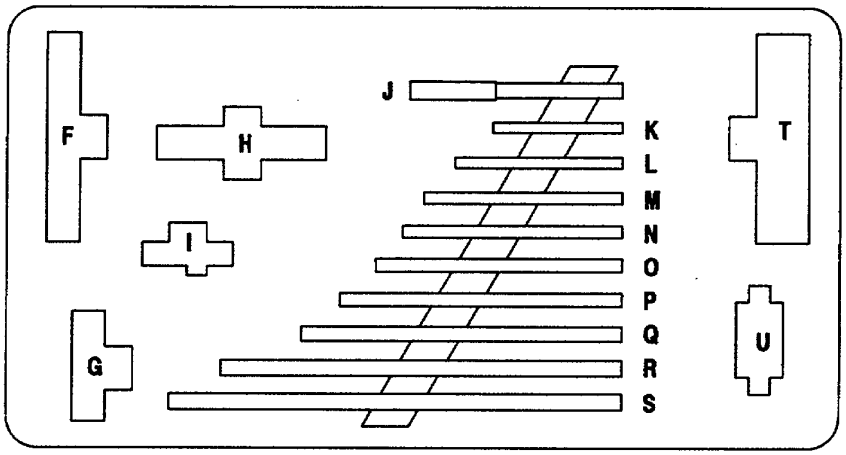

PART NUMBER	NOMENCLATURE	QTY	LOCATION	PART NUMBER	NOMENCLATURE	QTY	LOCATION
SSDD42	SCREWDRIVER, REV	1	F	V02022	WRENCH 5/8 X 11/16	1	N
560910	KNIFE	1	G	V02426	WRENCH 3/4 X 13/16	1	O
ND112	NUTDRIVER	1	H	V02830	WRENCH 7/8 X 15/16	1	P
YA151A	TAPE, MEASURING	1	I	V03234	WRENCH 1 X 1 1/16	1	Q
AD8	WRENCH 8 INCH ADJUSTABLE	1	J	V04042	WRENCH 1 1/4 X 1 5/16	1	R
V01012	WRENCH 5/16 X 3/8	1	K	VO4446	WRENCH 1 3/8 X 1 7/16	1	S
V01416	WRENCH 7/16 X1/2	1	L	ECF35A	FLASHLIGHT W/ BATTERIES	1	T
V01820	WRENCH 9/16 X 5/8	1	M	560911	SPARE BATTERIES	2	U

CONTENTS-COVER TRAY (HOSE CASE)

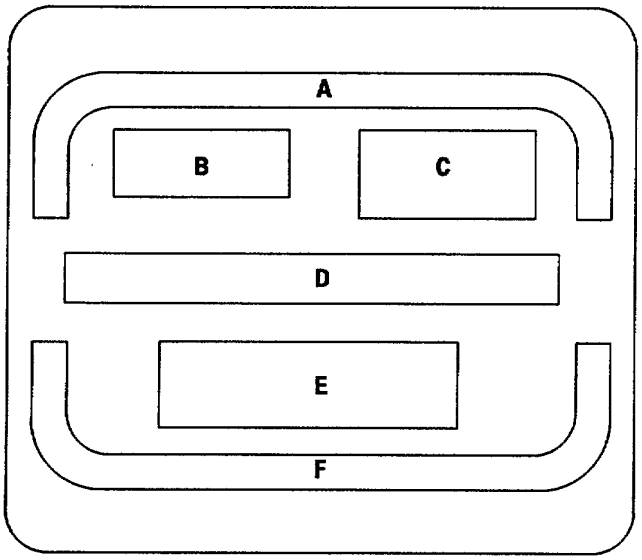

PART NUMBER	NOMENCLATURE	LENGTH	QTY	LOCATION
MS27369E0360	HOSE ASSY-4	36 INCH	6	A
MS27369E0080	HOSE ASSY-4	8 INCH	16	B
MS27369G0084	HOSE ASSY-6	8 INCH	12	C
MS27369E0240	HOSE ASSY-4	24 INCH	8	D
MS27369E0140	HOSE ASSY-4	14 INCH	14	E
MS27369G0360	HOSE ASSY-6	36 INCH	6	F

Figure B-4. Fluid Line Repair Kit (4920-01-266-7534) (Sheet 2 of 3)

CONTENTS-UPPER TRAY (HOSE CASE)

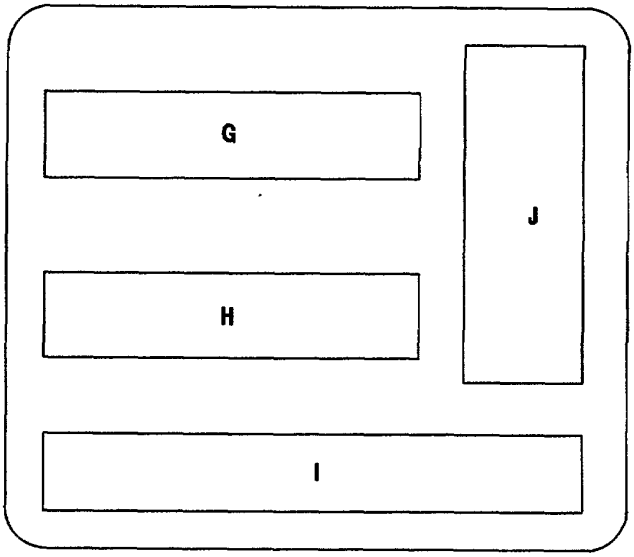

PART NUMBER	NOMENCLATURE	LENGTH	QTY	LOCATION
MS27369J0150	HOSE ASSY-10	15 INCH	3	G
MS27369H0150	HOSE ASSY-8	15 INCH	4	H
MS27369G0240	HOSE ASSY-6	24 INCH	10	I
MS27369G0144	HOSE ASSY-6	14 INCH	18	J

CONTENTS-LOWER TRAY (HOSE CASE)

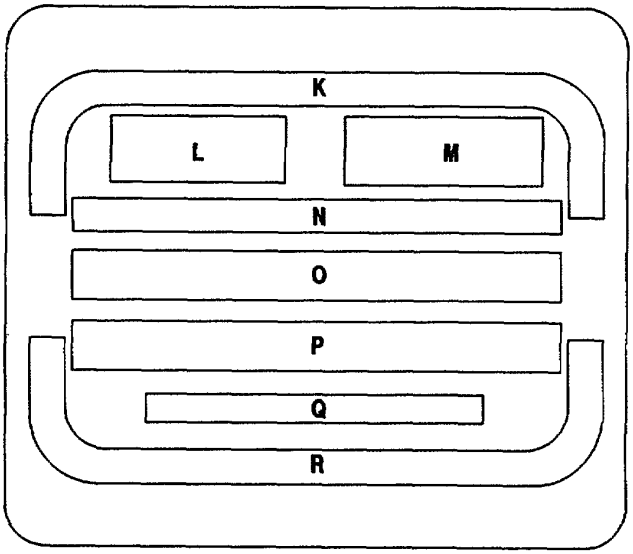

PART NUMBER	NOMENCLATURE	LENGTH	QTY	LOCATION
MS27369H0360	HOSE ASSY-8	36 INCH	1	K
MS27369H0090	HOSE ASSY-8	9 INCH	3	L
MS27369J0090	HOSE ASSY-10	9 INCH	3	M
MS27369K0240	HOSE ASSY-12	24 INCH	1	N
MS27369H0240	HOSE ASSY-8	24 INCH	3	O
MS27369J0240	HOSE ASSY-10	24 INCH	3	P
MS27369K0154	HOSE ASSY-12	15 INCH	1	Q
MS27369J0360	HOSE ASSY-10	36 INCH	1	R

Figure B-4. Fluid Line Repair Kit (4920-01-266-7534) (Sheet 3 of 3)

MK-0015-100
COMPONENT CASE CONTENTS CHART

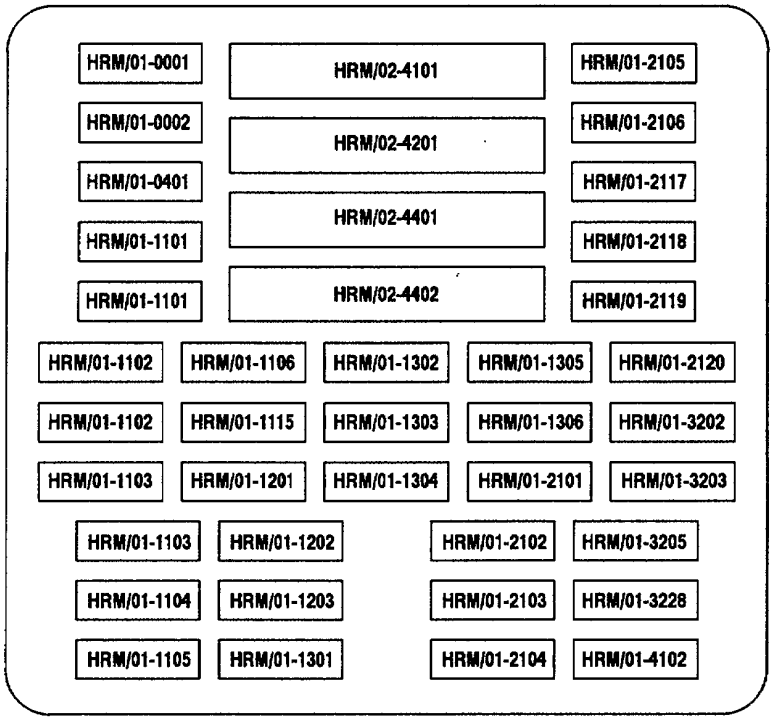

PART NO.	DESCRIPTION
HRM/01-0001	SELF CLINCHING CABLE STRAP MS3367-1-0
HRM/01-0002	TERMINAL BOARD MS27212-1-8
HRM/01-0401	DATA BUS CABLE, SIZE 22
HRM/01-1101	SEALED CRIMP SPLICE FOR SIZES 20-22-24-26 WIRE RATED 125° C OR HIGHER
HRM/01-1102	SEALED CRIMP SPLICE FOR SIZES 16-18-20 WIRE RATED 125° C OR HIGHER
HRM/01-1103	SEALED CRIMP SPLICE FOR SIZES 12-14-16 WIRE RATED 125° C OR HIGHER
HRM/01-1104	SEALED CRIMP SPLICE FOR SIZES 20-22-24-26 WIRE RATED 105° C OR LOWER
HRM/01-1105	SEALED CRIMP SPLICE FOR SIZES 16-18-20 WIRE RATED 105° C OR LOWER
HRM/01-1106	SEALED CRIMP SPLICE FOR SIZES 12-14-16 WIRE RATED 105° C OR LOWER
HRM/01-1115	SPLIT BOLT SPLICE CONNECTOR FOR SIZES 4-6-8-10 WIRE
HRM/01-1201	SPLICE FOR SHIELDED WIRE SIZES 20-22-24-26
HRM/01-1202	SPLICE FOR SHIELDED WIRE SIZES 16-18-20
HRM/01-1203	SPLICE FOR SHIELDED WIRE SIZES 12-14-16
HRM/01-1301	SPLICE FOR COAXIAL CABLES RG-179B/U, RG-316/U
HRM/01-1302	SPLICE FOR COAXIAL CABLE RG-180B/U
HRM/01-1303	SPLICE FOR COAXIAL CABLES RG-142B/U, RG-124/U, RG-302/U, RG-303/U
HRM/01-1304	SPLICE FOR COAXIAL CABLES RG-9-B/U, RG-214/U, RG-225/U, RG-393/U
HRM/01-1305	SPLICE FOR COAXIAL CABLES RG-58C/U, RG-223/U
HRM/01-1306	SPLICE FOR COAXIAL CABLES RG-59B/U, RG-71B/U
HRM/01-2101	TERMINAL LUGS FOR SIZE 24 WIRE: M7928/1-7, -8, -9, -10

PART NO.	DESCRIPTION
HRM/01-2102	TERMINAL LUGS FOR SIZE 22 WIRE: M7928/1-12, -14 -15, -16
HRM/01-2103	TERMINAL LUGS FOR SIZE 20 WIRE: M7928/1-21, -23 -24, -25
HRM/01-2104	TERMINAL LUGS FOR SIZE 18 WIRE: M7928/1-30, -32, -33, -34
HRM/01-2105	TERMINAL LUGS FOR SIZE 16 WIRE: M7928/1-39, -41 -42, -43
HRM/01-2106	TERMINAL LUGS FOR SIZE 14 WIRE: M7928/1-48, -50 -51, -52
HRM/01-2117	SEALING PLUGS M27488: CONNECTOR CONTACTS M39029/1, CNS, WTK, C21 .031
HRM/01-2118	CONNECTOR CONTACTS M39029/22, /30, /56, /58
HRM/01-2119	CONNECTOR CONTACTS M39029/4, /5, /29, /57, /63, /64
HRM/01-2120	CONNECTOR CONTACTS M39029/16, /18, /31, /32 AND M28804/9, /10
HRM/01-3202	SHIELD TERMINATOR WITH GROUND WIRE: M83519/2-7
HRM/01-3203	SHIELD TERMINATOR WITH GROUND WIRE: M83519/2-8
HRM/01-3205	SHIELD TERMINATOR WITH GROUND WIRE: M83519/2-10
HRM/01-3228	TERMINATORS FOR NICKEL-PLATED SHIELD INCLUDING VERMILLION
HRM/01-4102	MTC FLAT CONNECTOR WAFERS WITH ROUND WIRE SEGMENTS
HRM/02-4101	PRIMARY WIRE REPAIR SEGMENTS SIZES 12, 16, 20
HRM/02-4201	SHIELDED WIRE REPAIR SEGMENTS SIZES 12, 16, 20
HRM/02-4401	DATA BUS TRIAXIAL CONNECTOR REPAIR COMPONENTS
HRM/02-4402	DATA BUS REPAIR SEGMENTS

Figure B-5 Wire Repair Kit (5935-01-254-1688) (Sheet 1 of 3)

MK-0015-200
TOOL CASE CONTENTS CHART

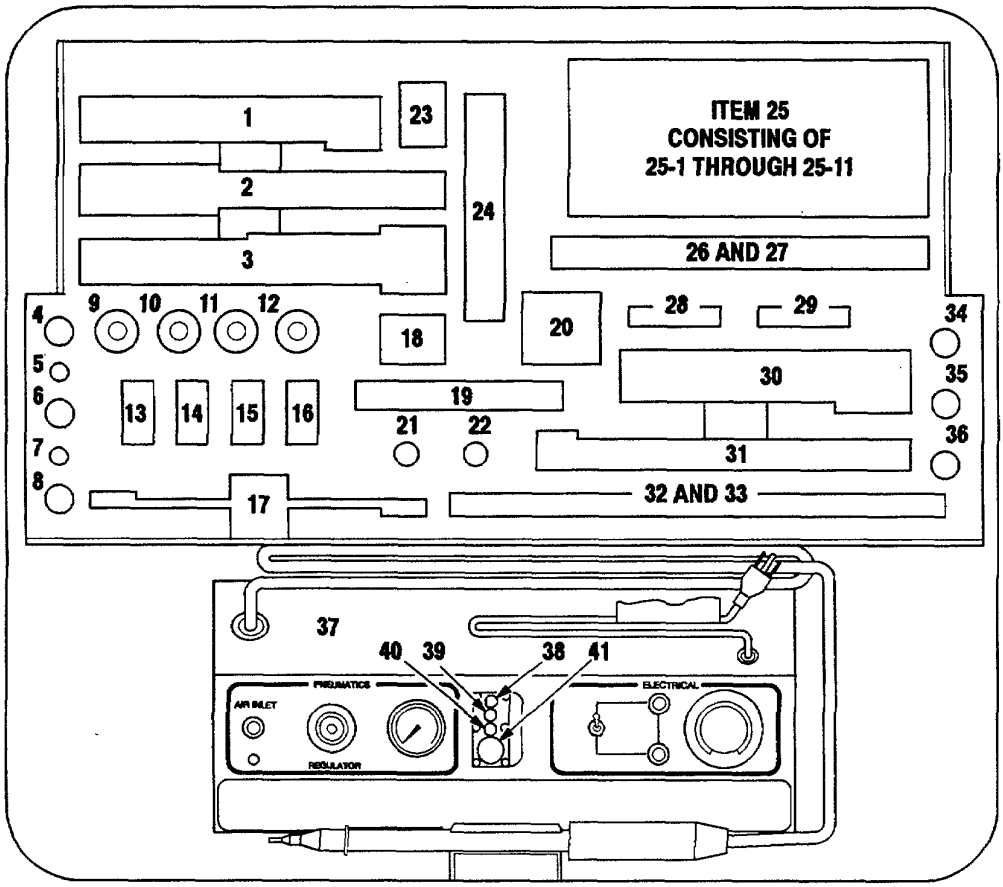

ITEM NO.	DESCRIPTION
	GENERAL HARNESS TOOLS
4.	BRAID SLITTER
5.	HOOK FOR PULLING WIRES (BOYE SIZE F)
6.	UTILITY KNIFE (X-ACTO)
13.	SPARE BLADES FOR UTILITY KNIFE (X-ACTO)
7.	6 INCH SCALE
19.	HEAT SHRINKABLE REPAIR TAPE
23.	ILLUMINATING MAGNIFIER (MAGNA LIFE MODEL 100)
24.	CABLE STRAP INSTALLATION TOOL (PANDUIT GS2B)

ITEM NO.	DESCRIPTION
	GENERAL HAND TOOLS
9.	BLADE SCREWDRIVER
10.	PHILLIPS SCREWDRIVER
11.	SOCKET WRENCH (NUT DRIVER) 1/4 INCH
12.	HEX DRIVER, 7/64 INCH
	WIRE AND CABLE CUTTERS
29.	DIAGONAL CUTTER (LINDSTROM 8140)
28.	WIRE CUTTER (SHEARS) (IDEAL 45-123)

Figure B-5. Wire Repair Kit (5935-01-254-1688) (Sheet 2 of 3)

ITEM NO.	DESCRIPTION
	HEATING TOOL AND ACCESSORIES
37.	COMPRESSED AIR/NITROGEN HEATING TOOL (RAYCHEM HT 900B)
38.	HEATING NOZZLE HT-1
39.	HEATING NOZZLE HT-2
40.	HEATING NOZZLE HT-3
41.	HEATING NOZZLE HT-4
18.	HEATING NOZZLE HT-5
2.	400 H_Z ADAPTER (AIR FORCE)
3.	400 H_Z ADAPTER (NAVY)
21.	QUICK-DISCONNECT FITTING, 1C
22.	QUICK-DISCONNECT FITTING, H1C
32.	SPARE HEATER ELEMENT FOR HT-900B
33.	SPARE THERMOCOUPLE FOR HT-900B
20.	SPARE AIR FILTER ELEMENT FOR HT-900B
	WIRE STRIPPERS AND BLADES
30.	WIRE STRIPPER (IDEAL STRIPMASTER WITH RED HANDLE)
1.	WIRE STRIPPER (IDEAL STRIPMASTER WITH BLACK HANDLE)
14.	DIE BLADES FOR WIRE STRIPPER (L-5559 AND L-5560)
15.	DIE BLADES FOR WIRE STRIPPER (45-1610-1 AND 45-1611-1)
16.	DIE BLADES FOR WIRE STRIPPER (45-1654-1 AND 45-1608-1)
	CRIMP TOOLS
31.	WIRE SPLICE CRIMP TOOL (RAYCHEM AD-1377)
26.	TERMINAL LUG CRIMP TOOL (M22520/10-01) INCLUDES ITEM 27
27.	DIE SET FOR TERMINAL LUG CRIMP TOOL (M22520/10-101) PART OF ITEM 26
34.	DIE SET REMOVAL TOOL (HX3-82)
	CONNECTOR AND CONTACT TOOLS
8.	REMOVAL TOOL FOR SIZE 8 SOLDER CONTACTS (DRK264-8)
36.	REMOVAL TOOL FOR SIZE 16 SOLDER CONTACTS (AD-1447)
35.	HOLDER FOR DATA BUS CONNECTORS (AD-1564)
17.	MTC CONNECTOR WAFER REMOVAL TOOL (CE-1201900)
	BULK MATERIAL STORAGE RACK
25.	SPOOL RACK (DOUBLE SIDED)
25-1.	MIL-T-43435 LACING AND TYPING TAPE (HRM/10-0004)
25-2.	SIZE 16 SHIELDED WIRE, 200° C M27500-16SP-1-S23 (HRM/10-0201)
25-3.	SIZE 20 SHIELDED WIRE, 200° C M27500-20SP-1-S23 (HRM/10-0202)
25-4.	SIZE 12 PRIMARY WIRE, 200° C M22759/43-12-9 (HRM/10-0103)
25-5.	SIZE 20 PRIMARY WIRE, 200° C M22759/43-20-9 (HRM/10-0101)
25-6.	3/16 INCH SHIELD BRAID (HRM/10-0005)
25-7.	3/8 INCH SHIELD BRAID (HRM/10-0006)
25-8.	13/16 INCH SHIELD BRAID (HRM/10-0007)
25-9.	3/8 INCH HEAT-SHRINKABLE TUBING (RAYCHEM RNF-100-3/8) (HRM/10-5032)
25-10.	1/2 INCH HEAT SHRINKABLE TUBING (RAYCHEM RNF-100-1/2) (HRM/10-5033)
25-11.	1 INCH HEAT-SHRINKABLE TUBING (RAYCHEM RP-4800-1) (HRM/10-5031)
	INSTRUCTIONS (LOCATED ON OPPOSITE SIDE OF THIS PANEL)
42.	BASIC PROCEDURES AND USE OF TOOLS (HRM/00-INSTR-00)
43.	INSTRUCTIONS FOR WIRE AND CABLE SPLICING COMPONENTS (HRM/00-INSTR-10)
44.	INSTRUCTIONS FOR WIRE AND CABLE END TERMINATION COMPONENTS (HRM/00-INSTR-20)
45.	INSTRUCTIONS FOR SHIELD TERMINATION COMPONENTS (HRM/00-INSTR-30)
46.	INSTRUCTIONS FOR WIRE AND CABLE REPAIR SEGMENTS (HRM/00-INSTR-40)
47.	INSTRUCTIONS FOR DATA BUS REPAIR COMPONENTS (HRM/00-INSTR-50)
48.	INSTRUCTIONS FOR GENERAL HARNESS COMPONENTS AND ACCESSORIES (HRM/00-INSTR-90)

Figure B-5. Wire Repair Kit (5935-01-254-1688) (Sheet 3 of 3)

CONTENTS CHART

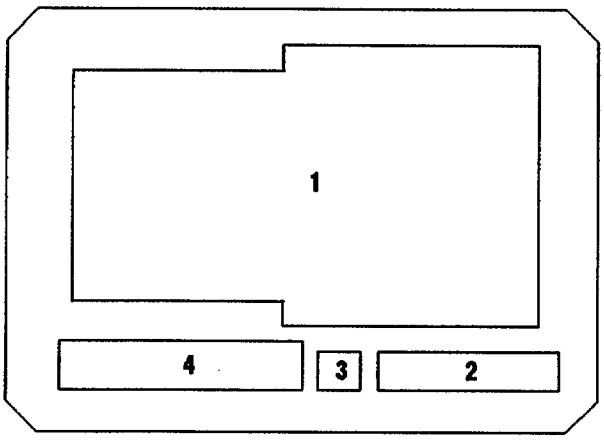

ITEM NO.	ITEM DESCRIPTION
1.	TEKTRONIX 1502B TIME DOMAIN REFLECTOMETER
2.	AN/PSM-45A DIGITAL MULTIMETER
3.	TEST LEADS
4.	FULTON IND. MX-992/U FLASHLIGHT

Figure B-6. Electrical Test Kit (4920-01-266-7536) (Sheet 1 of 2)

CONTENTS CHART

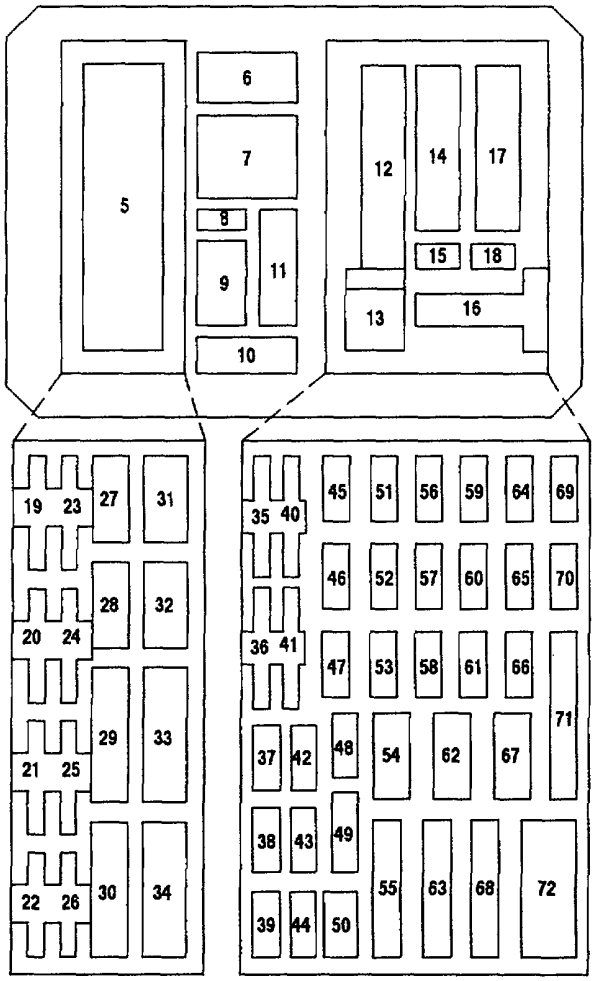

MISC ADAPTER BOX COAX ADAPTER BOX

ITEM NO.	ITEM DESCRIPTION
5.	POMONA 2249-C-360S COAX EXTENSION CABLE
6.	BECKMAN DL-243 TEST LEAD KIT
7.	BECKMAN FG-3000-600-283 TEST LEAD EXTENSION
8.	ELECTRO OPTIX M-7LB MAGNIFYING GLASS
9.	SPARE
10.	SPARE
11.	SPARE
12.	TEXTRONIX 006-1658-01 TDR CHART PAPER (4 REQD)
13.	BA3030/U D-CELL BATTERY (2 REQD)
14.	SPARE
15.	DURACELL MN2400 BATTERY (2 REQD)
16.	SPARE
17.	POMONA 2249-C-120S COAX EXTENSION CABLE
18.	SPARE
19.	POMONA 3562-0 ADAPTER-MS SOCKET #16 BLACK POMONA 3562-2 ADAPTER-MS SOCKET #16 RED

ITEM NO.	ITEM DESCRIPTION
20.	POMONA 3563-0 ADAPTER-MS PIN #16 BLACK POMONA 3563-2 ADAPTER-MS PIN #16 RED
21.	POMONA 3564-0 ADAPTER-MS SOCKET #12 BLACK POMONA 3564-2 ADAPTER-MS SOCKET #12 RED
22.	POMONA 3565-0 ADAPTER-MS PIN #12 BLACK POMONA 3565-2 ADAPTER-MS PIN #12 RED
23.	POMONA 4690-0 ADAPTER-MS SOCKET #22 BLACK POMONA 4690-2 ADAPTER-MS SOCKET #22 RED
24.	POMONA 4691-0 ADAPTER-MS PIN #22 BLACK POMONA 4691-2 ADAPTER-MS PIN #22 RED
25.	POMONA 3560-0 ADAPTER-MS SOCKET #20 BLACK POMONA 3560-2 ADAPTER-MS SOCKET #20 RED
26.	POMONA 3561-0 ADAPTER-MS PIN #20 BLACK POMONA 3561-2 ADAPTER-MS PIN #20 RED
27.	SPARE
28.	SPARE
29.	SPARE
30.	SPARE
31.	POMONA 1269 ADAPTER-BNC/DUAL BANANA PLUG
32.	POMONA 1452 ADAPTER-BNC/DUAL BANANA JACK
33.	POMONA 2630 ADAPTER-BNC/ALLIGATOR CLIPS
34.	POMONA 3073 ADAPTER-BNC/DUAL BANANA PLUGS
35.	SCHAAL ASSOC. SA-5147 ADAPTER-COAX PIN/SMA
36.	SCHAAL ASSOC. SA-5195 ADAPTER COAX PIN/SMA
37.	AMPHENOL 31-30468-2 TRIAXIAL JACK-D POL
38.	AMPHENOL 31-30468-3 TRIAXIAL JACK-F POL
39.	AMPHENOL 31-30468-4 TRIAXIAL JACK-H POL
40.	SCHAAL ASSOC. SA-5146 ADAPTER-COAX SOCKET/SMA
41.	SCHAAL ASSOC. SA-5194 ADAPTER-COAX SOCKET/SMA
42.	POMONA 3840-50 50 OHM TERMINATION
43.	SPARE
44.	SPARE
45.	TED AJC-2-F ADAPTER BNC/DM-F PLUG
46.	TED AJC-2-K ADAPTER BNC/DM-K PLUG
47.	TED AJC-2-M ADAPTER BNC/DM-M PLUG
48.	UG-1368/U ADAPTER BNC/TPS PLUG
49.	UG-349A/U ADAPTER BNC/N PLUG
50.	AMPHENOL UG-201/U ADAPTER BNC/N JACK
51.	TED AJC-3-B ADAPTER BNC/DM-B JACK
52.	TED AJC-2-E ADAPTER BNC/DM-E PLUG
53.	TED AJC-3-E ADAPTER BNC/DM-E JACK
54.	UG-306A/U BNC/BNC RIGHT ANGLE
55.	TEKTRONIX 017-0090-00 ADAPTER 50/125 OHM
56.	TED AJC-2-A ADAPTER BNC/DM-A PLUG
57.	TED AJC-3-A ADAPTER BNC/DM-A JACK
58.	TED AJC-2-B ADAPTER BNC/DM-B PLUG
59.	AMPHENOL 79025 ADAPTER BNC/TNC PLUG
60.	AMPHENOL 79675 ADAPTER BNC/TNC JACK
61.	AMPHENOL UG-914/U ADAPTER BNC/BNC (2 REQD)
62.	TEKTRONIX 017-0063-00 ADAPTER BNC/GR PLUG
63.	TEKTRONIX 017-0092-00 ADAPTER 50/93 OHM
64.	UG-635/U ADAPTER BNC/C PLUG
65.	AMPHENOL 901-167 ADAPTER BNC/ SMA PLUG
66.	AMPHENOL 901-166 ADAPTER BNC/SMA JACK
67.	TEKTRONIX 017-0064-00 ADAPTER BNC/GR PLUG
68.	TEKTRONIX 017-0091-00 ADAPTER 50/75 OHM
69.	SPARE
70.	KINGS ELECT KH-99-04 ADAPTER BNC/HN PLUG
71.	SIKORSKY EWR60127 ADAPTER 4 PIN AUDIO
72.	SIKORSKY EWR60128 ADAPTER 5 PIN AUDIO

Figure B-6. Electrical Test Kit (4920-01-266-7536) (Sheet 2 of 2)

APPENDIX C
EXPENDABLE SUPPLIES AND MATERIALS LIST

BDAR TM PROCEDURES. THE EXPEDIENT REPAIR PROCEDURES IN BDAR TM ARE FOR USE IN COMBAT ONLY. STANDARD MAINTENANCE/REPAIR PROCEDURES ARE TO BE USED AS SOON THEREAFTER AS POSSIBLE.

SECTION I. INTRODUCTION

C-1. SCOPE.

This appendix lists expendable supplies and materials you will need to make BDR fixes on the AH-64A helicopter. Items are listed alphabetically by the item name shown in the description column. These items are authorized to you by CTA 50-970, Expendable/Durable Items (Except Medical, Class V, Repair Parts, and Heraldic Items) or CTA 8-100.

C-2. EXPLANATION OF COLUMNS (Section II).

C-2.1. Column (1) - Item Number. This number is assigned to the entry in the listing and is referenced in the narrative instructions to identify the material, e.g., "Use adhesive (item 1, App C)".

C-2.2. Column (2) - National Stock Number. This is the National stock number assigned to the item; use it to request or requisition the item.

C-2.3. Column (3) - Description. Indicates the Federal item name and if required, a description to identify the item. The last line for each item indicates the Commercial and Government Entity Code (CA-GEC) in parentheses followed by the part number.

C-2.4. Column (4) - Unit of Issue (U/I). Is the abbreviation of the units under which material is issued.

SECTION II. EXPENDABLE SUPPLIES AND MATERIALS LIST

Item Number	NSN	Description	U/I
1	8040-01-163-3481	Adhesive, 1 qt. (04347) EA9309.3NA	KT
2	8040-01-363-3493	Adhesive, 1 qt. (33564) EA9323	KT
3	9540-00-720-1324	Angle, structural, 0.75 x 0.75 x 0.063, 7075-T6 (81348) QQ-A-200/2	FT
4	9540-00-140-2417	Angle, structural, 1.5 x 1.5 x 0.125, 7075-T6511 (81348) QQ-A-200/11	FT
5	9540-00-854-6554	Angle, structural, 2 x 2 x 0.250, 7075-T6511 (81348) QQ-A-200/11	FT
6	9540-00-162-6386	Channel, structural, 1 x 2.75 x 0.125, 7075-T6511 (81348) QQ-A-200/11	FT
7	4730-00-279-0065	Clamp, hose (7Z588) QS200M12W	EA
8	4730-00-541-7747	Clamp, hose (88044) AN737TW74-91	EA
9	4730-00-278-9200	Clamp, hose, 0.438 - 0.688 in. dia. (88044) AN737TW22	EA
10	4730-00-203-3131	Clamp, hose, 1.328 - 2.063 in. dia. (88044) AN737TW56-66	EA
11	8305-01-125-0725	Cloth, cheesecloth, 36 in. X 5 yd. (58536) A-A-1491	RO
12	8305-00-530-0111	Cloth, satin, 60 in. wide, (81349) MIL-C-9084, VIIIB type and 1 class	RO
13	5315-00-230-9740	Cotter pin assortment kit (45225) 10570	KT
14	6850-01-331-3350	Dry cleaning solvent, 55 gl. (81348) P-D-680a, type III	DR
15	8010-01-314-6077	Epoxy primer coating kit, yellow, 1 pt. (81349) MIL-P-23377, TY 1, CL 3	KT
16		Extrusion, Tee Flange, 0.125 in. flange, 7075-T6511 (Table C-1, Figure C-1)	FT
17	1560-01-305-7911	Fuel tank parts kit (59297) 052M003-501	EA
18	9150-00-149-7431	Hydraulic fluid, fire resistant, 1 qt. (81349) MIL-H-83282	CN
19	6810-00-753-4993	Isopropyl alcohol, technical, 8 oz. (89264) 2200200	CN
20	4730-00-277-6837	Nipple, boss (88044) AN815-4	EA
21	4730-00-187-0486	Nipple, boss (88044) AN815-6	EA

Item Number	NSN	Description	U/I
22	4730-00-222-1912	Nut, tube coupling (96906) AN818-4	EA
23	4730-00-203-3831	Nut, tube coupling (96906) AN818-6	EA
24	4730-00-554-8015	Nut, tube coupling (96906) MS21921-4	EA
25	4730-00-810-4499	Nut, tube coupling (96906) MS21921-6	EA
26	5350-00-721-8117	Paper, abrasive, 180 grit, pg. 50 sh. (58536) A-A-1047	PG
27	5350-00-224-7201	Paper, abrasive, 400 grit, pg. 50 sh. (58536) A-A-1047	PG
28	8040-01-016-9963	Primer, adhesive, 1 qt. (33564) EA9203	CN
29	1615-01-126-9446	Repair kit, rotary blade (3 inch) 70072-15001-012	KT
30	1615-01-126-9447	Repair kit, rotary blade (5 inch) 70072-15001-013	KT
31	1615-01-126-9448	Repair kit, rotary blade (8 inch) 70072-15001-014	KT
32	1615-01-128-1748	Repair kit, rotary blade (3 x 1/4 inch) 70092-15001-015	KT
33	4920-01-126-9449	Repair kit, rotary blade (3 x 1/2 inch) 70072-15001-016	KT
34	1615-01-126-9450	Repair kit, rotary blade (3 x 7/8 inch) 70072-15001-017	KT
35	1615-01-126-9451	Repair kit, rotary blade (6 x 1/4 inch) 70072-15001-018	KT
36	1615-01-128-4408	Repair kit, rotary blade (6 x 1/2 inch) 70072-15001-019	KT
37	8030-00-180-5931	Sealing compound, Epocast 169-946, 1-qt. (99384)	KT
38	8030-00-008-7198	Sealing compound, MIL-S-81733 TY 2-1/2, 1 pt. (83574) PR-1436-G B-1/2	KT
39	8030-01-154-9253	Sealing compound, MIL-S-8802 TY 1, CL B-1/2, 1 pt. (83574) PR-1422 B-1/2	KT
40	8030-00-881-5238	Sealing compound, 24 oz. type 2, class 1, 3 Kit (81349) MIL-S-8516	KT
41	9535-00-167-2174	Sheet metal, 0.025 in. 2024-T3, 36 in. x 12 ft. (81348) QQ-A-250/4	SH
42	9535-00-167-2175	Sheet metal, 0.032 in. 2024-T3, 36 in. x 12 ft. (81348) QQ-A-250/4	SH
43	9535-00-236-7000	Sheet metal, 0.050 in. 2024-T3, 60 in. x 12 ft. (81348) QQ-A-250/4	SH
44	9535-00-084-4370	Sheet metal, 0.063 in. 2024-T3, 36 in. x 6 ft. (81348) QQ-A-250/4	SH

Item Number	NSN	Description	U/I
45	9535-00-232-0383	Sheet metal, 0.071 in. 2024-T3, 48 in. x 12 ft. (81348) QQ-A-250/5	SH
46	9535-00-232-0405	Sheet metal, 0.090 in. 2024-T3, 48 in. x 12 ft. (81348) QQ-A-250/5	SH
47	9535-00-640-4326	Sheet metal, 0.190 in. 2024-T3, 48 in. x 12 ft. (81348) QQ-A-250/4	SH
48	9535-00-232-7540	Sheet metal, 0.063 in. 7075-T6, 60 in. x 12 ft. (81348) QQ-A-250/13	SH
49	9535-00-086-9751	Sheet metal, 0.090 in. 7075-T6, 36 in. x 6 ft. (81348) QQ-A-250/13	SH
50	9535-00-236-7075	Sheet metal, 0.125 in. 7075-T6, 48 in. x 12 ft. (81348) QQ-A-250/13	SH
51	9535-00-640-4225	Sheet metal, 0.160 in. 7075-T6, 48 in. x 12 ft. (81348) QQ-A-250/13	SH
52	9535-00-236-7077	Sheet metal, 0.190 in. 7075-T6, 48 in. x 12 ft. (81348) QQ-A-250/13	SH
53	9515-00-185-0883	Shim stock, laminated, 12 in. x 3 ft. x 0.074 in. (81349) M22499/3-021	FT
54	4730-00-278-0678	Sleeve, flared, tube fitting (96906) MS20819-4	EA
55	4730-01-189-6775	Sleeve, flared, tube fitting (96906) MS20819-6	EA
56	4730-00-289-8619	Sleeve, clinch, tube fitting (96906) MS21922-4	EA
57	4730-00-554-7398	Sleeve, clinch, tube fitting (96906) MS21922-6	EA
58	7510-01-372-5777	Tape, aluminized glass fabric, 36 yd. (76381) FGA32600	RO
59	4020-00-753-6555	Tape, lacing and tying, 500 yd. (82110) GUDELACESTYLE18	RO
60	7510-00-074-5124	Tape, pressure sensitive, adhesive, green (81348) PPP-T-60	RO
61	5999-01-343-0871	Tape, shielding, electrical (02731) HS5620-10-6480	RO
62	4710-01-354-8063	Tube, metallic, 0.250 dia. (02731) HMS6-1132	FT
63	4710-00-274-3993	Tube, metallic, 0.375 dia. (81349) MIL-T-7081	FT
64	4710-00-278-8733	Tube, metallic, 0.500 dia. (81348) WW-T-700/3	FT
65	4710-00-279-0897	Tube, metallic, 0.750 dia. (81348) WW-T-700/3	FT
66	4710-00-433-2447	Tube, metallic, 1.000 dia. (81348) WW-T-700/3	FT

Item Number	NSN	Description	U/I
67	4710-00-279-0902	Tube, metallic, 1.250 dia. (81348) WW-T-700/3	FT
68	9525-01-047-6455	Wire, nonelectrical, 1 lb., 0.020 in. copper (96906) MS20995CY20	RO

Table C-1. Extruded Tee Flange

Die Number	Material	A	B	C	D	T1	T2	T3	R
60-22380	7075-T6511	2.005	1.000	0.940	0.375	0.100	0.125	0.125	0.090

NOTE

- Dimension in inches
- Machine substitute from bar stock of same material
- Break all sharp edges to 0.020 R, unless otherwise specified.

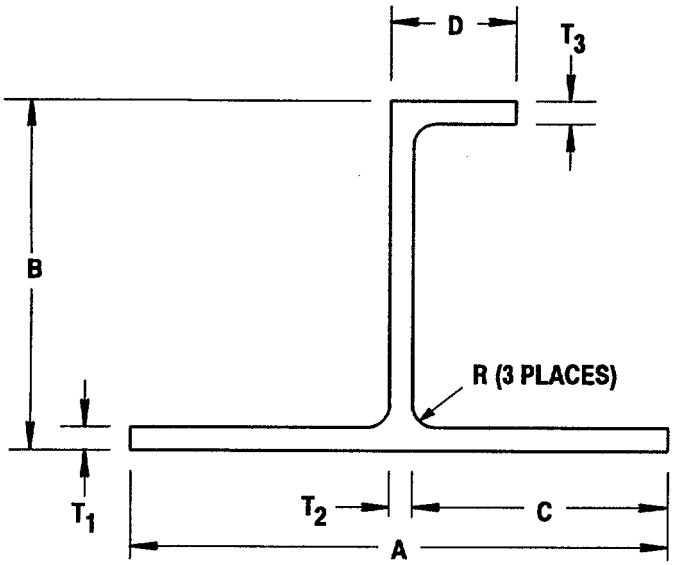

Figure C-1. Extruded Tee Flange

APPENDIX D
CANNIBALIZATION

BDAR TM PROCEDURES. THE EXPEDIENT REPAIR PROCEDURES IN BDAR TM ARE FOR USE IN COMBAT ONLY. STANDARD MAINTENANCE/REPAIR PROCEDURES ARE TO BE USED AS SOON THEREAFTER AS POSSIBLE.

SECTION I. CANNIBALIZATION CANDIDATES LISTS

D-1. GENERAL.

The AH-64A components that are considered crucial during combat are identified by the AH-64A major component cannibalization candidates list (Table D-1) and the AH-64A electrica/avionic major component cannibalization candidates list (Table D-2). Whenever possible, these components should be salvaged from other aircraft that are incapable of returning to base or considered unable to fly. These lists are a prediction based on evaluations of the components susceptibility of damage, deferrability, and repairability. Both lists have been prioritized in order of component importance. The components are also identified whether they are a part of a group removal procedure that is in Section II of this appendix.

This is not an exhaustive list of all components which may be cannibalized. When needed, any component may be cannibalized and used provided it is acceptable using the serviceability criteria provided in each specific system chapter.

Table D-1. AH-64A Major Component Cannibalization Candidates

Nomenclature	Part Number	Group Removal Procedures
Main Rotor Blade (Figure 5-1, sheet 2)	7-311412000-5	Upper Rotor Assembly (Paragraph D-3)
Tail Rotor Blade (Figure 5-2, sheet 1)	7-311422050-7	Empennage Assembly (Paragraph D-2) and Tail Rotor Gearbox (Paragraph D-4)
Power Plant (Chapter 4)	T700-GE-701	N/A
Forward Fuel Cell (Figure 10-1, sheet 1)	320-4-44733-101 (Goodyear) or 37832-3 (Amfuel)	N/A
Aft Fuel Cell (Figure 10-1, sheet 1)	320-4-44734-101 (Goodyear) or 37833-3 (Amfuel)	N/A
Main Transmission Heat Exchanger (Figure 6-3, sheet 2)	09E20-2	N/A
Vertical Stabilizer (Figure 2-1)	7-311122600	Empennage Assembly (Paragraph D-2)

Table D-1. AH-64A Major Component Cannibalization Candidates - Cont

Nomenclature	Part Number	Group Removal Procedures
Main Rotor Support Mast (Figure 2-3)	7-311160020	Upper Rotor Assembly (Paragraph D-3)
Main Transmission (Figure 6-3, sheet 1)	7-311310001-39	N/A
MLG Shock Strut (Figure 3-1)	1168100-505	Main Landing Gear (Paragraph D-6)
Tail Rotor Common Drive Shaft (Figure 6-1)	19E203-1ACL107	Empennage Assembly (Paragraph D-2)
Engine Nose Gearbox (Figure 6-2)	7-311320001-5 (LH) 7-311320001-6 (RH)	N/A
Tail Rotor Gearbox (Figure 6-5)	7-311340001-7	Empennage Assembly (Paragraph D-2) and Tail Rotor Gearbox (Paragraph D-4)
Pylon Assembly (Figure 16-1)	7-318000001-613	Wing/Pylon (Paragraph D-7)
Main Rotor Head Assembly (Figure 5-1, sheet 2)	7-311411003-611	Upper Rotor Assembly (Paragraph D-3)
Tail Rotor Short Shaft (Figure 6-1)	19E203-IACL98	N/A
Main Rotor Base Support Struts (Figure 2-3)	7-311160055-1/2 7-311160060-1/2 7-311160070-1/2 7-311160085-1/2	Upper Rotor Assembly (Paragraph D-3)
MLG Trailing Arm (Figure 3-1)	1168320-101 (LH) 1168320-102 (RH)	Main Landing Gear (Paragraph D-6)
Horizontal Stabilator (Figure 2-1)	7-311123600	Empennage Assembly (Paragraph D-2)
RH Wing Assembly (Figure 2-1)	7-311130200-602	Wing/Pylon (Paragraph D-7)
LH Wing Assembly (Figure 2-1)	7-311130200-601	Wing/Pylon (Paragraph D-7)
Main Rotor Support Mast Base (Figure 2-3)	7-311160010	Upper Rotor Assembly (Paragraph D-3)
Main Rotor Drive Shaft (Figure 6-1)	7-211350021	Upper Rotor Assembly (Paragraph D-3)
Mixer Support Bolt (Figure 2-3)	7-311160044	Upper Rotor Assembly (Paragraph D-3)
Engine Nose Gearbox Quill Shaft (Figure 6-2)	7-211320093	N/A

Table D-1. AH-64A Major Component Cannibalization Candidates - Cont

Nomenclature	Part Number	Group Removal Procedures
Engine Nose Gearbox Vaneaxial Fan (Figure 6-2)	7-311322001	N/A
Main Rotor Blade Attachment Pin (Figure 5-1, sheet 2)	7-211411185	Upper Rotor Assembly (Paragraph D-3)
Main Transmission Input Clutch Assembly (Figure 6-3, sheet 1)	7-311310003-9	N/A
Mixer Support Assembly (Figure 2-3)	7-311160040-5	Upper Rotor Assembly (Paragraph D-3)
Main Rotor Aft Longitudinal Bellcrank Bolt (Figure 11-3)	7-211511209	Upper Rotor Assembly (Paragraph D-3)
Shaft Driven Compressor (Figure 7-4)	606545-9-1	N/A
Utility Manifold (Figure 7-1)	266600-1009	N/A
Primary Manifold (Figure 7-2)	266500-1009	N/A
Collective/Lateral Servocylinder (Figures 7-1 and 7-2)	289300	N/A
Main Rotor Swashplate (Figure 11-3)	7-311511101-17	Upper Rotor Assembly (Paragraph D-3)
Main Transmission Input Shaft (Figure 6-1)	19E202-1ACL85	N/A
Gas Turbine Engine (APU) (Figure 15-1)	3800102-2	N/A
Directional Servocylinder (Figures 7-1 and 7-2)	289400	Empennage Assembly (Paragraph D-2) and Tail Rotor Gearbox (Paragraph D-4)
Utility Hydraulic Accumulator (Figure 7-3)	266010-1003	N/A
Tail Wheel Lock Actuator (Figure 3-2)	1168960-507	N/A
TLG Arm and Socket (Figure 3-2)	1168851-101	Tail Landing Gear (Paragraph D-5)
TLG Arm Assembly (Figure 3-2)	1168859-101	Tail Landing Gear (Paragraph D-5)
Longitudinal Servocylinder (Figures 7-1 and 7-2)	308900	N/A
Main Rotor Collective Bellcrank (Figure 11-3)	7-311511117-9	Upper Rotor Assembly (Paragraph D-3)
Main Rotor Forward Longitudinal Bellcrank (Figure 11-3)	7-311511127-5	Upper Rotor Assembly (Paragraph D-3)

Table D-1. AH-64A Major Component Cannibalization Candidates - Cont

Nomenclature	Part Number	Group Removal Procedures
Main Rotor Aft Longitudinal Bellerank (Figure 11-3)	7-311511125-13	Upper Rotor Assembly (Paragraph D-3)
Main Rotor Lateral Bellcrank (Figure 11-3)	7-311511123-13	Upper Rotor Assembly (Paragraph D-3)
Intermediate Gearbox (Figure 6-4)	7-311330001-3	Empennage Assembly (Paragraph D-2)
Horizontal Stabilator Actuator (Figure 11-4)	7-311D10022-9	N/A
Primary Hydraulic Pump (Figure 7-2)	7-311810022-3	N/A
Utility Hydraulic Pump (Figure 7-1)	7-311810022-3	N/A
TLG Shock Strut (Figure 3-2)	1168600-505	Tail Landing Gear (Paragraph D-5)
ECS Shutoff Valve (Figure 13-1)	7-116310001	N/A
Main Rotor Scissors Assembly (Figure 11-3)	7-311511158-3 7-311511158-5	Upper Rotor Assembly (Paragraph D-3)
Engine Nose Gearbox Flexible Coupling (Figure 6-1)	19E202-1ACL84	N/A
Hydraulic Hand Pump (Figure 7-2)	266700-1003	N/A
Main Rotor Longitudinal Link (Figure 11-3)	7-311511130-5	Upper Rotor Assembly (Paragraph D-3)
Tail Rotor Head Assembly (Figure 5-2, sheet 1)	7-311421036-9	Empennage Assembly (Paragraph D-2) and Tail Rotor Gearbox (Paragraph D-4)
Main Transmission Input Flexible Coupling (Figure 6-1)	19E202-1ACL86	N/A
Tail Rotor Common Flexible Coupling (Figure 6-1)	19E203-1ACL97	Empennage Assembly (Paragraph D-2)
Nitrogen Inerting Unit (Figure 10-1, sheet 1)	3261029-0101	N/A
APU Drive Anti-Flail (Figure 6-1)	7-311350020-7	N/A
Tail Rotor Pitch Link (Figure 11-4, sheet 2)	7-311527035-31 7-311527035-41	Empennage Assembly (Paragraph D-2) and Tail Rotor Gearbox (Paragraph D-4)

Table D-1. AH-64A Major Component Cannibalization Candidates - Cont

Nomenclature	Part Number	Group Removal Procedures
Main Rotor Pitch Link (Figure 11-3)	7-311511135-5	Upper Rotor Assembly (Paragraph D-3)
Tail Rotor Swashplate (Figure 11-4, sheet 2)	7-311527038-15	Empennage Assembly (Paragraph D-2) and Tail Rotor Gearbox (Paragraph D-4)
Air Pressure Regulator (ENCU) (Figure 13-1)	2203010-1-1	N/A
APU Drive Shaft (Figure 6-1)	19E205-3A	N/A
Temperature Control Unit (Figure 13-1)	625614-2-1	N/A
LH Truss Assembly (Figure 15-1)	7-311651028	N/A
Engine Forward-Inboard Mount (Figure 4-1, sheet 1)	7-211671011	N/A
Engine Mount Forward-Inboard Support (Figure 4-1, sheet 2)	7-311670131	N/A
Engine Aft Lower Link Assembly (Figure 4-1, sheet 2)	7-211670104	N/A
Rotor Brake Actuator (Figure 7-1)	030-16700 (Parker-Hannifin) or 4000380-2 (Goodyear)	N/A
Engine Forward Rig Connecting Link (Figure 4-1, sheet 2)	7-211670105	N/A
Engine Mount Aft-Inboard Support (Figure 4-1, sheet 2)	7-311670117	N/A
Longitudinal Servocylinder Bracket (Figure 2-4)	7-311511175-11	N/A
Engine Forward-Lower Mount (Figure 4-1, sheet 1)	7-311670014	N/A
Engine Aft-Inboard Mount (Figure 4-1, sheet 1)	7-311670024	N/A
RH Support Truss (Figure 15-1)	7-311651027	N/A
APU Fitting Mount (Figure 15-1)	7-211651019	N/A
Engine Aft Rig Connecting Link (Figure 4-1, sheet 2)	7-211670106	N/A
Lateral Servocylinder Bracket (Figure 2-4)	7-311511139-5	N/A

Table D-2. AH-64A Electrical/Avionic Major Component Cannibalization Candidates

Nomenclature	Part Number	Group Removal Procedures
TADS Electronic Unit (TEU) Assembly (Figure 18-5)	13076362	N/A
PNVS (Figure 18-5)	13080000	N/A
TADS (Figure 18-5)	13076000-519	N/A
TADS Power Supply (Figure 18-5)	13075523	N/A
PNVS Electronic Unit Assembly (Figure 18-5)	13080410	N/A
Heading Attitude Reference System (HARS) (Figure 18-2, sheet 1)	AN/ASN-143	N/A
Fire Control Computer (FCC) (Figure 18-6, sheet 1)	7-319200005	N/A
Communication Control (Figure 18-1, sheet 2)	C-10414/ARC	N/A
Digital Automatic Stabilization Equipment Computer (DASEC) (Figure 18-6, sheet 1)	4040859-960	N/A
Aerial Rocket Control System (ARCS) Panel (Figure 18-6, sheet 2)	7-317310000	N/A
Optical Relay Tube (ORT) (Figure 18-5)	13076385	N/A
Computer Display Unit (Figure 18-2, sheet 3)	CP-1252B/ASN-128 or IP-1552/G	N/A
Air Data Processor (ADP) (Figure 18-6, sheet 1)	7-319720008	N/A
Radio Receiver (ADF) (Figure 18-2, sheet 2)	R1496A/ARN89 or R-2382/ARN-149(V)1	N/A
Display Adjust Panel (DAP) (Figure 18-7, sheet 1)	CG1082AB01	N/A
Sensor Surveying Unit (SSU) (Figure 18-7, sheet 1)	LG1127AB01	N/A
Receiver/Transmitter (VHF - AM/FM Radio) (Figure 18-1, sheet 1)	RT1354/ARC186(V) or RT1476/ARC-201(V)	N/A
Back-Up Bus Controller (BBC) Multiplex Remote Terminal Unit (MRTU) Type III (Figure 18-6, sheet 1)	4032299-959	N/A
Speech Security Equipment (Figure 18-1, sheet 2)	TSEC/KY-58	N/A
Symbol Generator (Figure 18-6, sheet 1)	7-319800002-7	N/A
MRTU Type I (Figure 18-6, sheet 1)	4032297-955	N/A

Table D-2. AH-64A Electrical/Avionic Major Component Cannibalization Candidates - Cont

Nomenclature	Part Number	Group Removal Procedures
Countermeasures Transmitter (IR Jammer)	T-1360A/ALQ 144(V)	N/A
(Figure 18-4, sheet 4)		
Receiver/Transmitter (UHF/AM Receiver)	RT-1167C/ARC164(A)	N/A
(Figure 18-1, sheet 1)		
Radar Warning Comparator (Figure 18-4, sheet 1)	CM-440/APR-39(V)	N/A
Receiver/Transmitter (Radar Altimeter)	RT-1115D/APN-209(V)	N/A
(Figure 18-2, sheet 2)		
Receiver/Transmitter (IFF) (Figure 18-3)	RT-1296/APX-100	N/A
Remote Hellfire Electronics (RHE)	622-5646-004	N/A
(Figure 18-6, sheet 1)		
CPG Fire Control Panel (Figure 18-6, sheet 2)	7-319510011	N/A
Turret Control Box (Figure 19-1, sheet 1)	7-317222004-25	N/A
Laser Electronic Unit (LEU) (Figure 18-5)	13079400	N/A
Receiver/Transmitter (Doppler) (Figure 18-2, sheet 3)	RT-1193A/ASN128	N/A
Data Entry Keyboard (DEK) Panel	7-219510034	N/A
(Figure 18-6, sheet 2)		
External Stores Controller (Figure 16-1)	7-317400210-11	N/A
Horizontal Situation Indicator (HSI) (Figure 8-3)	ID-2278A/A	N/A
Radio Magnetic Indicator (RMI) (Figure 8-3)	127680	N/A
Turbine Gas Temperature Indicator	100-476842-001	N/A
(Figure 8-1, sheet 1)		
Engine Torque Indicator (Figure 8-1, sheets 1 and 2)	100-476843-001	N/A
Engine Rotor RPM Indicator	100-476848-001	N/A
(Figure 8-1, sheets 1 and 2)		
Engine Fuel Quantity Indicator (Figure 8-4)	100-476845-001	N/A
Gas Generator (NG) RPM Indicator	100-476844-001	N/A
(Figure 8-1, sheet 1)		
Signal Data Converter Unit (Figure 8-4)	100-476849-003	N/A
AC Generator (Figure 9-1, sheet 1)	28B391-2-C	N/A
Remote Attitude Indicator (RAI) (Figure 8-3)	7-214200028	N/A

Table D-2. AH-64A Electrical/Avionic Major Component Cannibalization Candidates - Cont

Nomenclature	Part Number	Group Removal Procedures
Battery (Figure 9-3)	30637-001	N/A
Video Display Unit (VDU) (Figure 18-2, sheet 1)	7-311C10025	N/A
Rounds Counter/Magazine Controller	7-217231706-603	N/A
(Figure 19-1, sheet 1)		
Transformer/Rectifier (Figure 9-1, sheet 3)	9B40-15-D	N/A

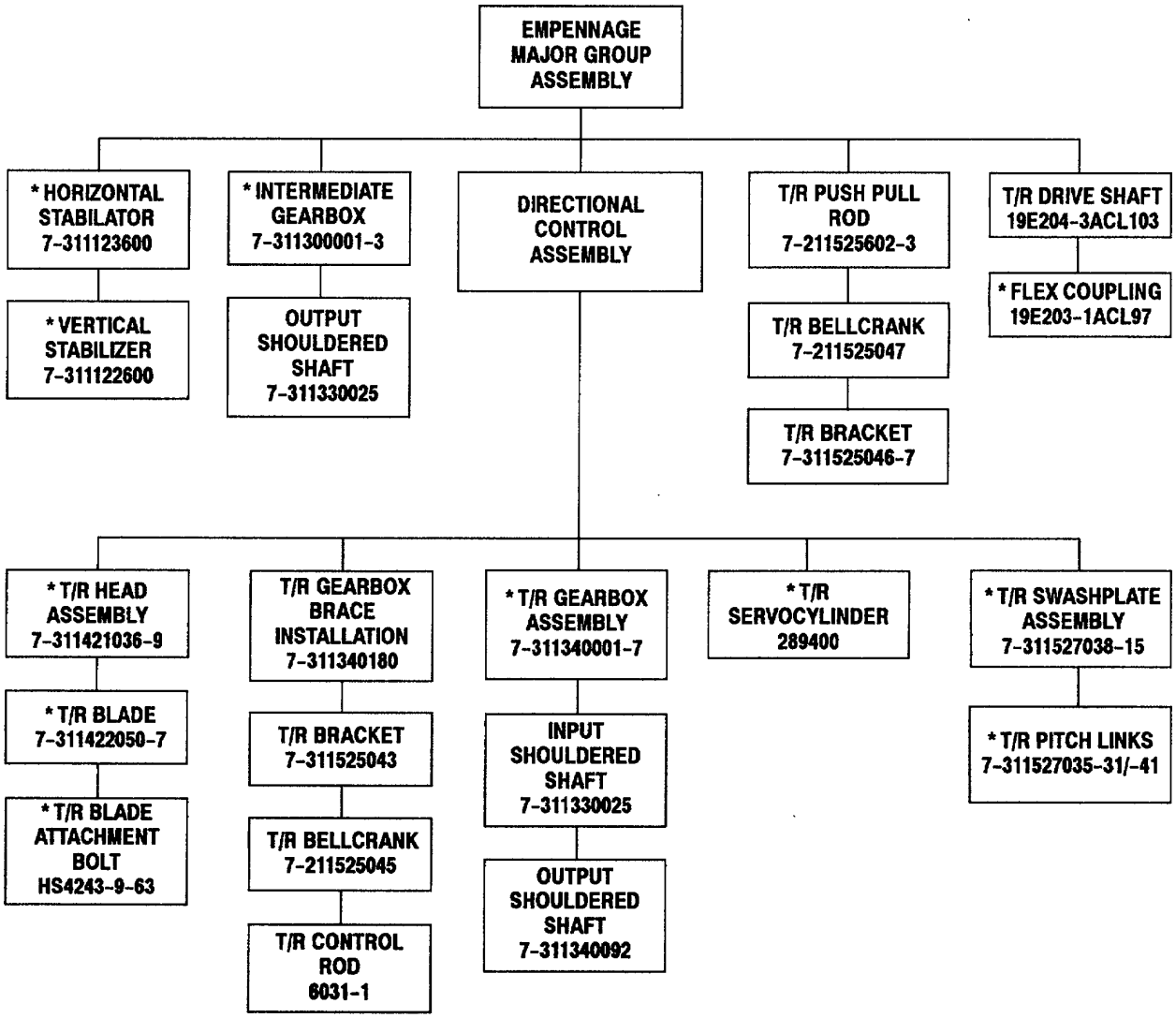

NOTE: NOT ALL LRU'S ARE INCLUDED ON THIS CHART
* CANNIBALIZATION CANDIDATES

M102-180

Figure D-1. Empennage Assembly Block Diagram

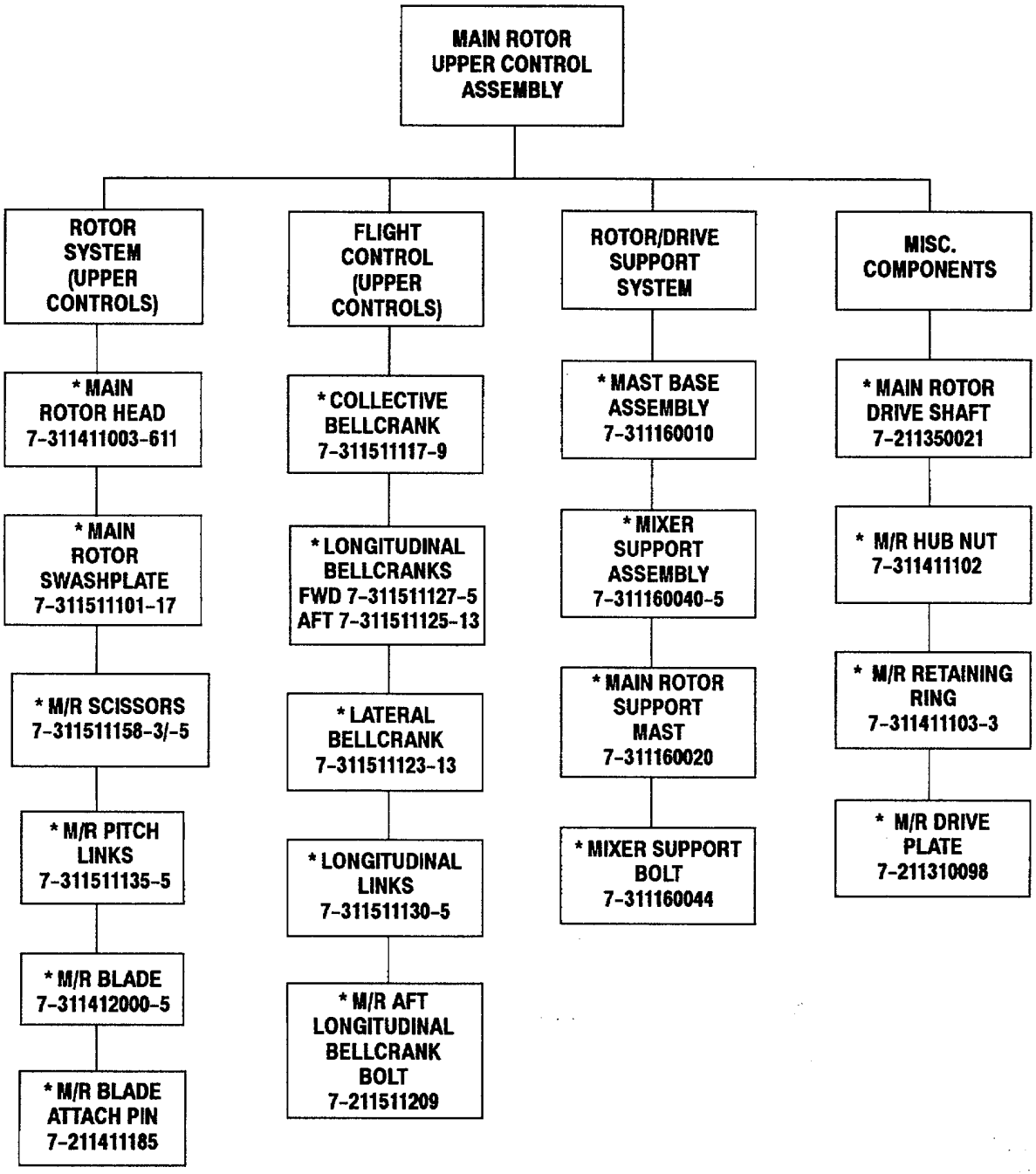

NOTE: NOT ALL LRU'S ARE INCLUDED ON THIS CHART
* CANNIBALIZATION CANDIDATES

M102-181

Figure D-2. Main Rotor Upper Control Block Diagram

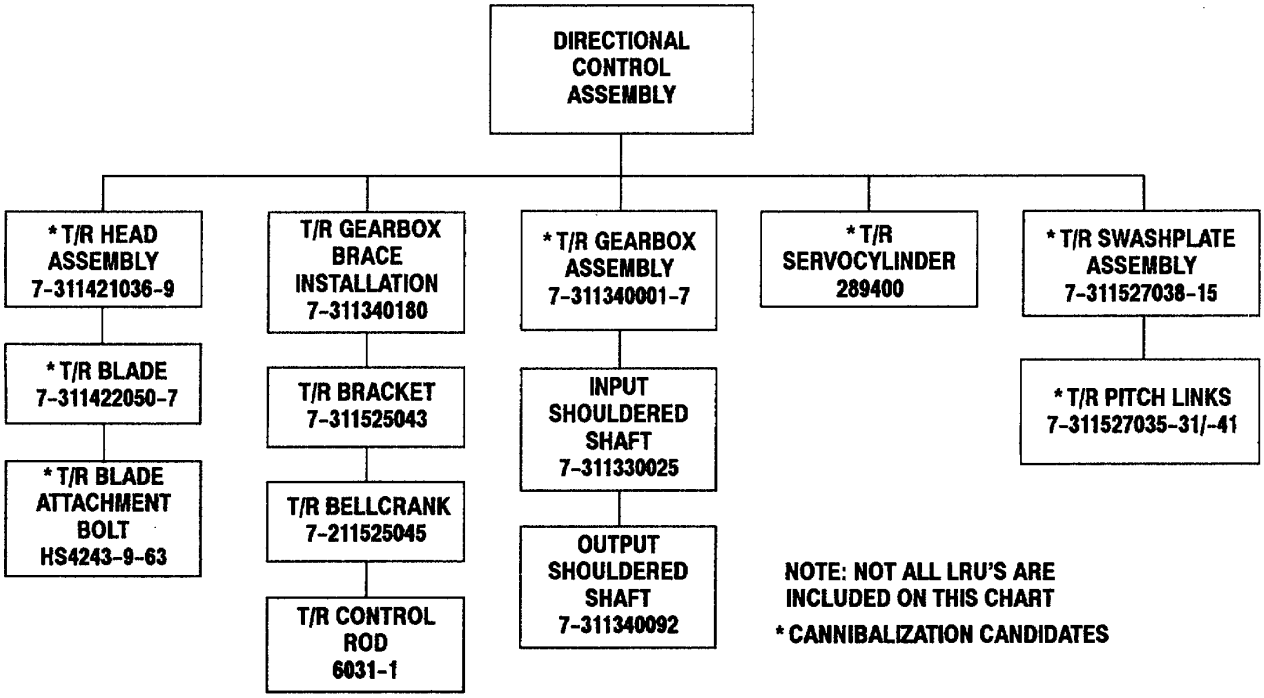

M102-182

Figure D-3. Directional Control Block Diagram

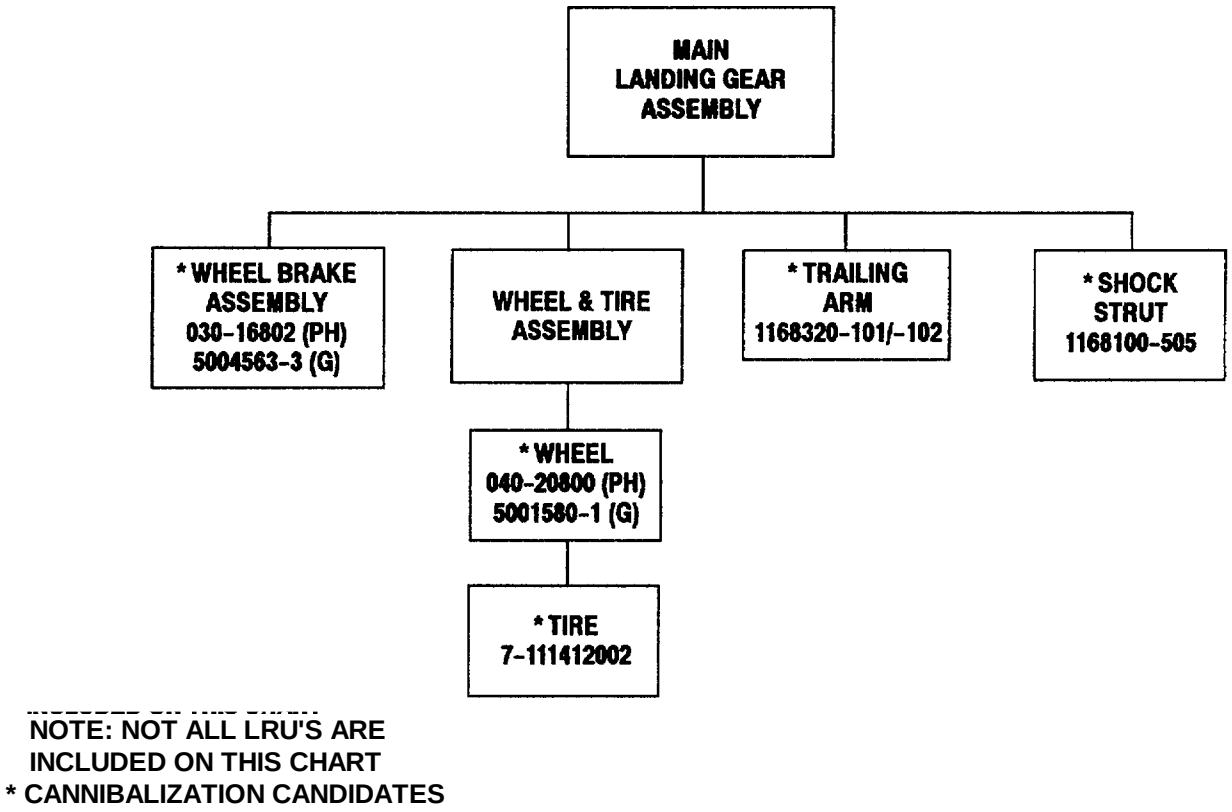

M102-183

Figure D-4. Main Landing Gear Block Diagram

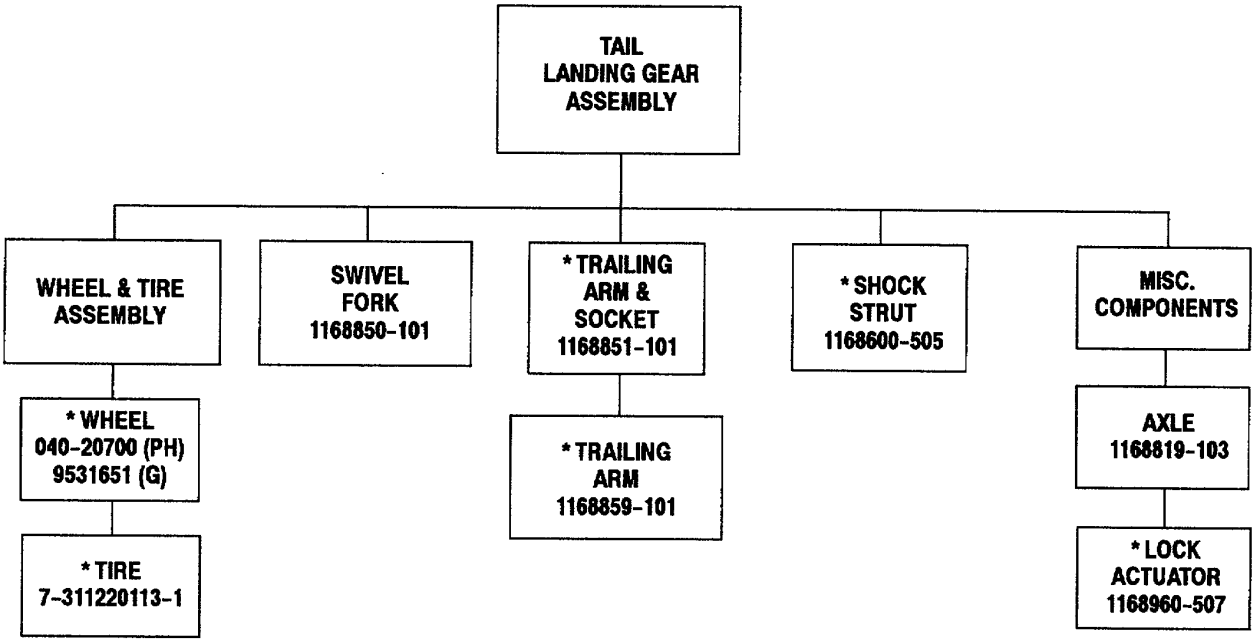

NOTE: NOT ALL LRU'S ARE INCLUDED ON THIS CHART

*** CANNIBALIZATION CANDIDATES**

M102-184

Figure D-5. Tail Landing Gear Block Diagram

SECTION II. GROUP REMOVAL/INSTALLATION PROCEDURES

D-2. EMPENNAGE ASSEMBLY REMOVAL/INSTALLATION.

D-2.1. Materials/Tools Required:

- Cotter pin assortment kit (item 13, App C)
- Dry cleaning solvent (item 14, App C)
- Epoxy primer coating kit (item 15, App C)
- Sealing compound (item 38, App C)
- 1/2 x 3/8-inch drive socket wrench adapter (item 1, App B)
- 5/8 x 3/8-inch drive box end torque wrench adapter (item 2, App B)
- 7/16 x 3/8-inch drive torque wrench adapter (item 3, App B)
- Light duty laboratory apron (item 4, App B)
- 7/16 x 3/8-inch drive open end socket wrench crowfoot attachment (item 11, App B)
- 1-1/2 x 3/8-inch drive open end socket wrench crowfoot attachment (item 12, App B)
- Chemical protective gloves (item 19, App B)
- Adjustable air filtering respirator (item 28, App B)
- Control system rigging kit (item 29, App B)
- #1 & #2 phillips offset screwdriver (item 31, App B)
- Sling set kit (item 32, App B)
- Vertical stabilizer sling (item 35, App B) (p/o item 32, App B)
- 1-1/2 x 1/2-inch drive socket wrench socket (item 36, App B)
- Aircraft maintenance tool kit (item 38, App B)
- Aircraft mechanic's tool kit (item 39, App B)
- 1-1/4 & 1-5/16-inch open end wrench (item 46, App B)
- 30 - 150 inch-pound 1/4-inch drive click type torque wrench (item 49, App B)
- 150 - 750 inch-pound 3/8-inch drive click type torque wrench (item 50, App B)
- 700 - 1600 inch-pound 1/2-inch drive click type torque wrench (item 51, App B)
- 0 - 600 inch-pound 3/8-inch drive dial indicator torque wrench (item 53, App B)

D-2.2. Personnel/Time Required:

- Four persons
- One inspector/supervisor
- 3 hours

D-2.3. Procedural Steps:

NOTE

Procedural steps calling for use of the sling kit will require use of an overhead portable crane/hoist.

D-2.3.1. Removal.

1. Remove fairings T355, R510, L510, L530, L540, R545, and L545 in accordance with TM 1-1520-238-23.
2. Remove directional F.S. 534 push-pull rod in accordance with TM 1-1520-238-23.
3. Remove five bolts (1) from No. 5 drive shaft (2) and intermediate gearbox input coupling flange (3) to remove drive shaft (2) from intermediate gearbox (4) (Figure D-6).

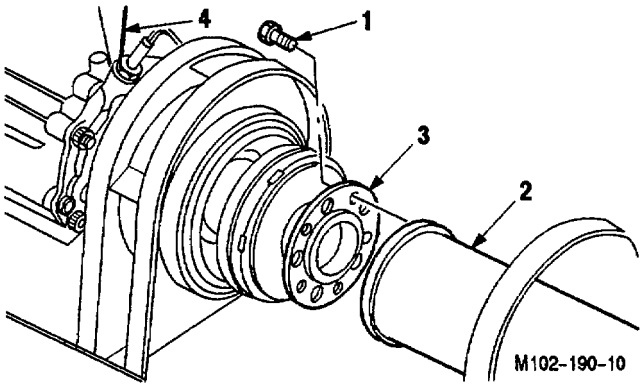

M102-190-10

Figure D-6. No.5 Drive Shaft Removal/Installation

4. Remove bolt (5), nut (6), cotter pin (7), and bushing (8) to remove aft end of directional flight control rod (9) from bellcrank lower arm (10) (Figure D-7).

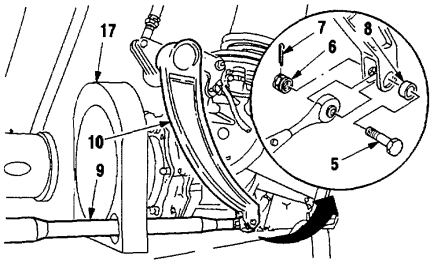

M102-190-12

Figure D-7. Directional Flight Control Rod Aft End Removal/Installation

5. Remove bolt (11), nut (12), washer (13), cotter pin (14), and bushing (15) to remove forward end of directional flight control rod (9) from bellcrank (16) (Figure D-8).

6. Slide control rod (9) forward to clear intermediate gearbox cooling fan (17) (Figure D-7).

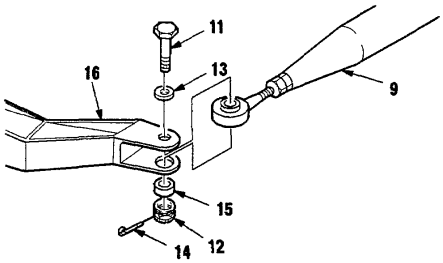

M102-190-15

Figure D-8. Directional Flight Control Rod Forward End Removal/Installation

7. Remove bolt (18), nut (19), washer (20), cotter pin (21), and bushing (22) to remove actuator (23) from horizontal stabilator (24) (Figure D-9).

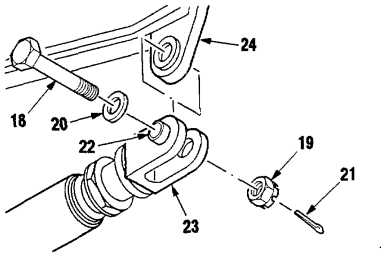

M102-190-8

Figure D-9. Stabilator Actuator Removal/Installation

8. Set horizontal stabilator (24) position and insert rig pin (25) through rig pin holes (Figure D-10).

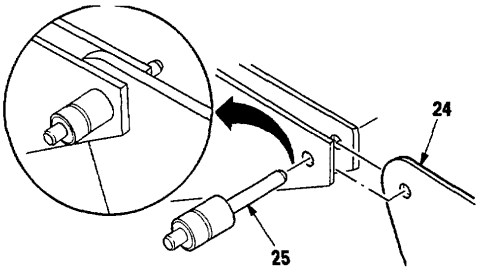

M102-190-14

Figure D-10. Stabilator Rig Pin Removal/Installation

9. Detach connectors P756 (26) and P1076 (27) from receptacles J756 (28) and J1076 (29) located on tailboom frame (30) (Figure D-11).
10. Detach coaxial connector P329 (31) from receptacle J329 (32) located on tailboom frame (30) (Figure D-11).
11. Remove two clamps (33), screw (34), washer (35), spacer (36), and nut (37) from tailboom frame (30) (Figure D-11).

NOTE

The P756/J756 and P1076/J1076 wire harness and bracket locations may vary slightly from figure shown.

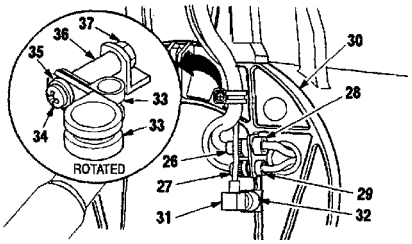

M102-190-5

Figure D-11. Electrical and Coaxial Connector Detachment/Attachment

12. Detach connector P124 (38) from receptacle J124 (39) located on tailboom (40), forward of intermediate gearbox (Figure D-12).

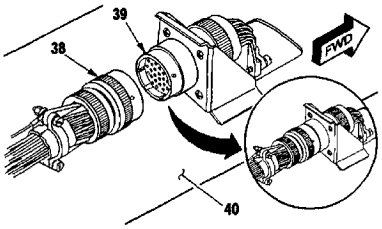

M102-190-4

Figure D-12. Connector P124 Detachment/Attachment

13. Vent primary and utility hydraulic systems in accordance with TM 1-1520-238-23.
14. Remove two primary hydraulic quick-disconnect coupling assemblies (41) and (42) from coupling halves (43) and (44) located on tailboom frame (30) (Figure D-13).

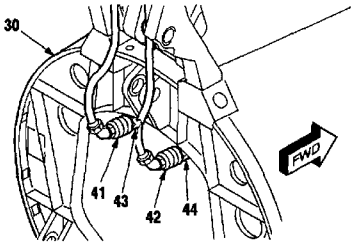

M102-190-13

Figure D-13. Primary Hydraulic Quick Disconnect Removal/Installation

15. Remove two utility hydraulic quick-disconnect coupling assemblies (45) and (46) coupling halves (47) and (48) located on lower forward surface of vertical stabilizer (49) (Figure D-14).

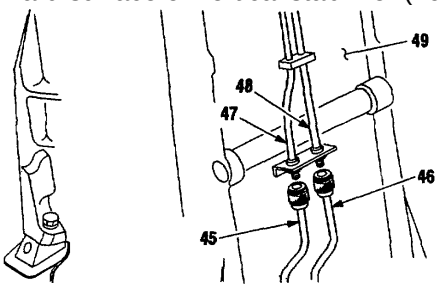

M102-190-6

Figure D-14. Utility Hydraulic Quick-Disconnect Removal/Installation

CAUTION

Ensure fifth strap will not damage or bind on any gearbox assembly components during empennage hoisting.

16. Insert and lock four sling quick-release pins (50) in vertical stabilizer pin sockets (51) to install vertical stabilizer sling (52). Wrap fifth strap (53) around tail rotor gearbox (54) (Figure D-15).

WARNING

Hoisted components can cause injury or death if they fall. Keep away from hoisted components and loaded crane. If injury occurs, seek medical aid.

17. Remove empennage assembly (55) from tailboom (40) (Figure D-15).
   a. Position lifting crane aft of helicopter tail.
   b. Align crane hook (56) over tail rotor gearbox area on stabilizer forward structure.
   c. Connect crane hook (56) to sling lifting eye (57).

⚠CAUTION

Sling will be tensioned at this point only enough to remove strap slack. Hoist loading of the installed vertical stabilizer will cause major structural damage.

   d. Carefully operate crane winch to remove all slack from sling straps (58).

⚠CAUTION

Sling was originally designed to lift vertical stabilizer without the horizontal stabilator, and tail rotor assemblies. Using this procedure will cause an unbalanced condition. Proper care must be exercised.

   e. Remove four mounting bolts (59) and four washers (60) from vertical stabilizer base mounting lugs (61).
   f. Use three persons to support and guide empennage assembly (55). Hoist empennage assembly (55) clear of tailboom (40).

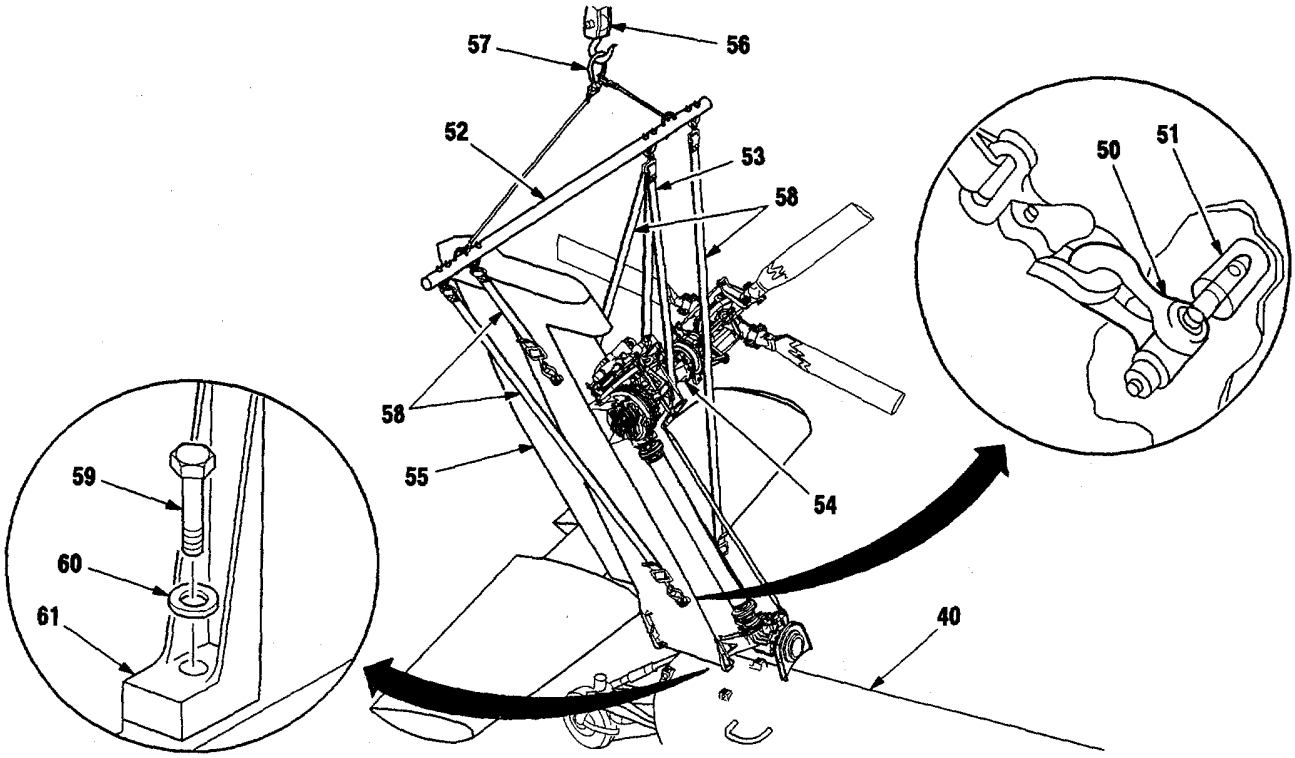

M102-190-11

Figure D-15. Empennage Assembly Removal/Installation

D-2.3.2. Cleaning.

1. Wipe surfaces of removed vertical stabilizer fairings and attaching parts with a clean rag.
2. Blow dust and dirt from electrical connectors.
3. Wipe hydraulic quick-disconnect fittings with a clean rag.

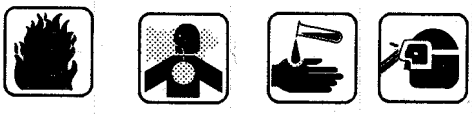

4. Remove compound from stabilizer base mounting lugs and lug mating surfaces on tailboom.
5. Clean mounting lugs and lug mating surfaces on tailboom with cleaning solvent.

D-2.3.3. Inspection.

1. Refer to Chapters 5, 6, 7, and 11 for battle damage criteria.
2. Check barrel nuts for cracks, warpage, or stripped threads. None allowed.
3. Check mounting lugs for cracks or deformation. None allowed.
4. Check horizontal stabilator pivot lugs for damage, distortion or looseness.
5. Check stabilator shoulder bolts for looseness.

D-2.3.4. Installation.

CAUTION

Ensure fifth strap will not damage or bind on any gearbox assembly components during empennage hoisting.

1. Insert and lock four sling quick release pins (50) in vertical stabilizer pin sockets (51) to install vertical stabilizer sling (52). Wrap fifth strap (53) around tail rotor gearbox (54) (Figure D-15).

WARNING

Hoisted components can cause injury or death if they fall. Keep away from hoisted components and loaded crane. If injury occurs, seek medical aid.

2. Install empennage assembly (55) on tailboom (40) (Figure D-15).

a. Align crane hook (56) over sling (52).

NOTE

Application of primer is necessary only if time permits.

b. Apply primer to mating surfaces of vertical stabilizer and tailboom mounting lugs. Allow primer to dry.
c. Connect crane hook (56) to sling lifting eye (57).

CAUTION

Sling was originally designed to lift vertical stabilizer without the horizontal stabilator, and tail rotor assemblies. Using this procedure will cause an unbalanced condition. Proper care must be exercised.

d. Use three persons to support and guide empennage assembly (55).
e. Hoist empennage assembly (55) over tailboom (40).
f. Align four vertical stabilizer mounting lugs (61) over mating tailboom (40) mount pads and carefully lower empennage assembly (55) onto tailboom (40).

NOTE

- Maintain a 0.020 inch minimum gap between the end of bolt threads (chamfer) and bottom of the barrel nut hole.
- Sequence of bolt installation and torque shall be left-hand forward, left-hand aft, right-hand aft, right-hand forward.

g. Apply coating of lubricant to bolt (59) threads, bolt shank, under bolt head, and washer (60) (INCONEL only).

h. Install four mounting bolts (59) and washers (60). Torque bolts (59) in increments of 325 INCH-POUNDS up to **950 to 1000 INCH-POUNDS.**

i. Remove strap (53) from tail rotor gearbox (54).

j. Remove four sling quick-release pins (50) from stabilizer pin sockets (51).

k. Disconnect sling lifting eye (57) from crane hook (56).

3. Install two utility hydraulic quick-disconnect coupling assemblies (45) and (46) to coupling halves (47) and (48) located on lower forward surface of vertical stabilizer (49) (Figure D-14).

4. Install two primary hydraulic quick-disconnect coupling assemblies (41) and (42) to coupling halves (43) and (44) located on tailboom frame (30) (Figure D-13).

5. Attach connector P124 (38) to receptacle J124 (39)located on tailboom (40), forward of intermediate gearbox (Figure D-12).

6. Install two clamps (33), screw (34), washer (35), spacer (36), and nut (37) to tailboom frame (30) (Figure D-11).

7. Attach coaxial connector P329 (31) to receptacle J329 (32) located on tailboom frame (30) (Figure D-11).

8. Attach connectors P756 (26) and P1076 (27) to receptacles J756 (28) and J1076 (29) located on tailboom frame (30) (Figure D-11).

9. Remove horizontal stabilator rig pin (25) and position stabilator (24) to allow installation of actuator bolt (18) (Figures D-9 and D-10).

10. Install bushing (22), bolt (18), washer (20), and nut (19) to install actuator (23) to horizontal stabilator (24). Torque nut (19) to **95 INCH-POUNDS**. Increase torque to align cotter pin hole, but do not exceed **110 INCH-POUNDS**. Install new cotter pin (21) (Figure D-9).

11. Slide directional flight control rod (9) aft through intermediate gearbox cooling fan (17) (Figure D-7).

12. Install bushing (15), bolt (11), washer (13), and nut (12) to install forward end of directional flight control rod (9) to bellcrank (16). Torque nut (12) to **30 INCH-POUNDS**. Increase torque to align cotter pin hole, but do not exceed **40 INCH-POUNDS**. Install new cotter pin (14) (Figure D-8).

13. Install bushing (8), bolt (5), and nut (6) to install aft end of directional flight control rod (9) to bellcrank lower arm (10). Torque nut (6) to **30 INCHPOUNDS**. Increase torque to align cotter pin hole, but do not exceed **40 INCH-POUNDS**. Install new cotter pin (7) (Figure D-7).

14. Install five bolts (1) to intermediate gearbox input coupling flange (3) and No. 5 drive shaft (2) to install drive shaft (2) to intermediate gearbox (4). Torque five bolts (1) to **120 INCH-POUNDS** (Figure D-6).

15. Perform electrical bond check on vertical stabilizer in accordance with TM 1-1520-238-23. Resistance shall not exceed **0.1 OHM**.

NOTE

Application of sealing compound is necessary only if time permits.

16. Seal four vertical stabilizer mounting lugs.

17. Install directional F.S. 534 push-pull rod in accordance with TM 1-1520-238-23.

18. Service primary and utility hydraulic systems in accordance with TM 1-1520-238-23.

19. Inspect (QA).

20. Perform operational check of horizontal stabilator in accordance with TM 1-1520-238-T.

21. Perform operational check of primary and utility hydraulic systems in accordance with TM 1-1520-238-T.

22. Perform directional flight controls rigging operational check in accordance with TM 1-1520-238-T.

23. Perform drive system dynamic operational check in accordance with TM 1-1520-238-T.

24. Perform tail rotor track and balance in accordance with TM 1-1520-238-T.

25. Install fairings T355, R510, L510, L530, L540, R545, and L545 in accordance with TM 1-1520-238-23.

D-3. UPPER ROTOR ASSEMBLY REMOVAL/INSTALLATION.

D-3.1. Materials/Tools Required:

- Cotter pin assortment kit (item 13, App C)
- 9/16 x 1/4-inch drive open end box socket wrench crowfoot attachment (item 8, App B)
- 11/16 x 3/8-inch drive open end box socket wrench crowfoot attachment (item 9, App B)
- 7/16 x 3/8-inch drive open end socket wrench crowfoot attachment (item 11, App B)
- Chemical protective gloves (item 19, App B)
- Transmission jackscrew (item 21, App B) (p/o item 44, App B)
- Sling set kit (item 32, App B)
- Air vehicle sling (item 33, App B) (p/o item 32, App B)
- Aircraft maintenance tool kit (item 38, App B)
- Aircraft mechanic's tool kit (item 39, App B)
- Special tool kit (item 43, App B)
- Transmission removal kit (item 44, App B)
- 1-1/4 & 1-5/16-inch open end wrench (item 46, App B)
- 1-3/16 & 1-1/4-inch open end wrench (item 47, App B)
- Main rotor mast support strut wrench (item 48, App B) (p/o item 43, App B)
- 150 - 750 inch-pound 3/8-inch drive click type torque wrench (item 50, App B)
- 700 - 1600 inch-pound 1/2-inch drive click type torque wrench (item 51, App B)
- 100 - 500 foot-pound 3/4-inch drive click type torque wrench (item 52, App B)

D-3.2. Personnel Time Required:

- Four Persons
- One inspector/supervisor
- 8 - 10 hours

D-3.3. Procedural Steps:

NOTE

Procedural steps calling for use of the sling kit will require use of an overhead portable crane/hoist.

D-3.3.1. Removal.

1. Remove access panels L200 and R200; remove fairings L230 and R230; open access doors T205L, T205R, T225A, T225T, T250L, T250R, T290L, T290R, and L325 in accordance with TM 1-1520-238-23.
2. Remove ECS air duct No. 4 in accordance with TM 1-1520-238-23.

WARNING

- Hoisted components can cause injury or death if they fall. Keep away from hoisted components and loaded crane. If injury occurs, seek medical aid.

- Main rotor blades could move once the pins are removed. A sudden blade movement could sever or crush your fingers or hand. Keep fingers and hands away from the lead lag link assembly.

CAUTION

Main rotor blades are individually calibrated to the deicing system controller. It is important when removing main rotor blades that blade serial numbers and power distributor connector numbers be recorded for later reinstallation at the same position. Failure to maintain proper deice system adjustment will result in damage to heater elements.

3. Remove main rotor blades in accordance with TM 1-1520-238-23.
4. Remove main rotor de-ice power distributor and air data system (ADS) mast in accordance with TM 1-1520-238-23.
5. Remove main rotor drive plate cover in accordance with TM 1-1520-238-23.
6. Remove main rotor flexible support in accordance with TM 1-1520-238-23.
7. Remove main transmission air data system (ADS) standpipe in accordance with TM 1-1520-238-23.

8. Remove main rotor gearshaft in accordance with TM 1-1520-238-23.
9. Detach connector P57 (1) from main rotor interrupter magnetic pickup transducer (2) (Figure D-16).

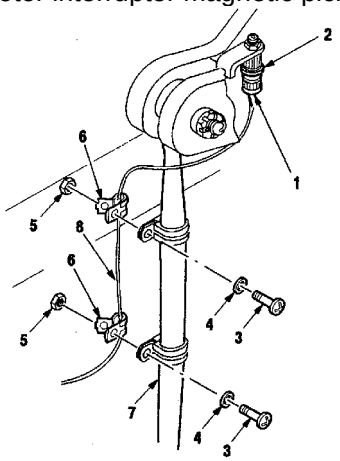

M102-196-65

Figure D-16. Connector P57 Detachment/Attachment

10. Remove two screws (3), washers (4), nuts (5), and clamps (6) from mixer right-hand lateral link (7). Secure connector (1) clear of mixer (Figure D-16).
11. Disconnect upper rod ends of longitudinal, collective, and lateral servocylinders from mixer assembly in accordance with TM 1-1520-238-23.
12. Detach connector P2 (8) from receptacle J2 (9) on generator No. 1 (10) and secure clear of generator (Figure D-17).

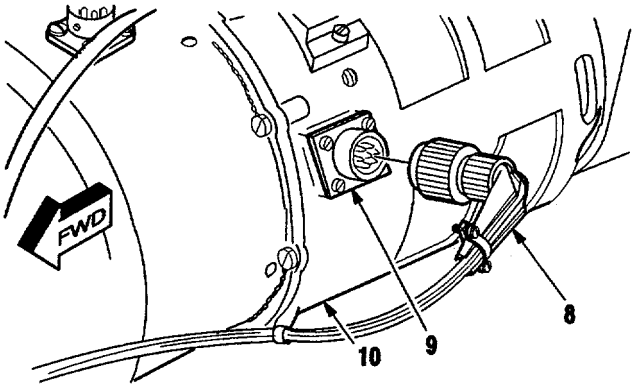

Figure D-17. Connector P2 Detachment/Attachment

13. Detach connector P950 (11) from dummy receptacle (12) and secure clear of upper rotor assembly (Figure D-18).

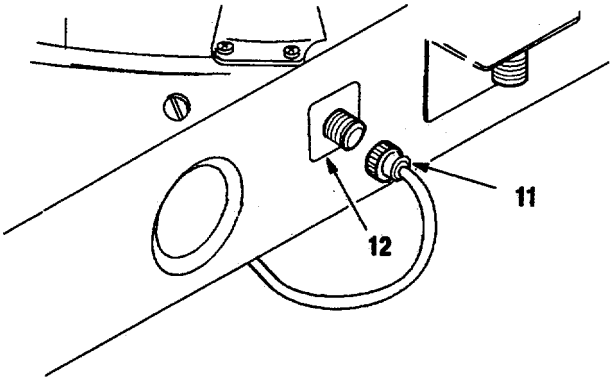

M102-196-71

Figure D-18. Connector P950 Detachment/Attachment

NOTE

Step 14 may not be necessary on all aircraft. If enough clearance exists for transmission to be lowered without removing clamp, proceed to step 15.

14. If necessary, remove bolt (13), washer (14), and clamp (15) from bracket (16) on right chip detector of transmission and secure clear of transmission (Figure D-19).

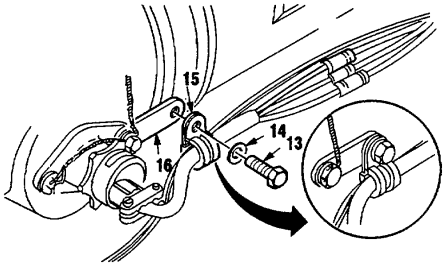

M102-196-72

Figure D-19. Right Chip Detector Wiring Clamp Removal/Installation

15. Disconnect left and right main transmission oil cooler lines (17) at quick-disconnect couplings (18) and remove from transmission in accordance with TM 1-1520-238-23. Secure oil lines (17) clear of transmission bottom (Figure D-20).

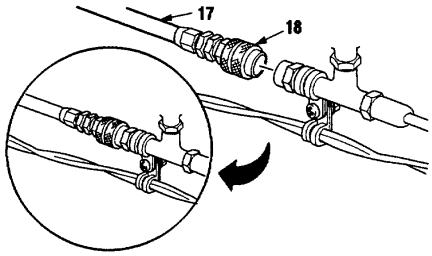

M102-196-57

Figure D-20. Transmission Oil Cooler Line Quick-Disconnect Removal/Installation

NOTE

Step 16 may not be necessary on all aircraft. If enough clearance exists for transmission to be lowered without removing wire harness and oil line, proceed to step 17.

16. If necessary, remove bolt (19), washer (20), and clamps (21) from bracket (22) on aft, right hand side of transmission. Secure wire harness (23) and oil line (18) clear of bracket (22) (Figure D-21).

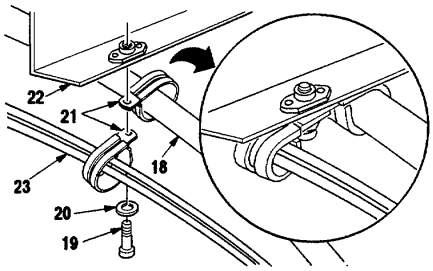

M102-196-23

Figure D-21. Oil Line and Wire Harness Removal/Installation

17. Loosen clamp (24) to remove shaft driven compressor inlet housing (25) from shaft driven compressor (26) (Figure D-22).

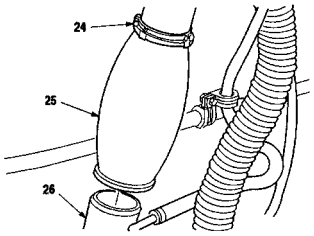

M102-96-73

Figure D-22. Shaft Driven Compressor Inlet Housing Removal/Installation

18. Disconnect engine No. 1 and No. 2 engine input drive shafts between drive shaft and input flexible coupling in accordance with TM 1-1520-238-23.
19. Remove drive shaft No. 3 in accordance with TM 1-1520-238-23.

⚠CAUTION

Ensure that lip on transmission input flange will clear No. 7 (APU) drive shaft when transmission is lowered. If minimum clearance of 0.25 INCH cannot be maintained, remove No. 7 drive shaft and anti-flail.

20. Disconnect engine No. 7 (APU) drive shaft between transmission input flange and drive shaft in accordance with TM 1-1520-238-23. Separate drive shaft from flange minimum of 0.25 INCH to provide proper clearance.
21. Place a transmission support plate (or 3/4 inch thick plywood) on deck beneath transmission.

⚠CAUTION

Three jackscrews must be installed 120 degrees apart and raised/lowered at the same time to prevent damage to aircraft.

22. Remove three transmission mounting bolts (27) and washers (28) from mast support base (29) and main transmission (30). Remove bolts 120 degrees apart (Figure D-23).

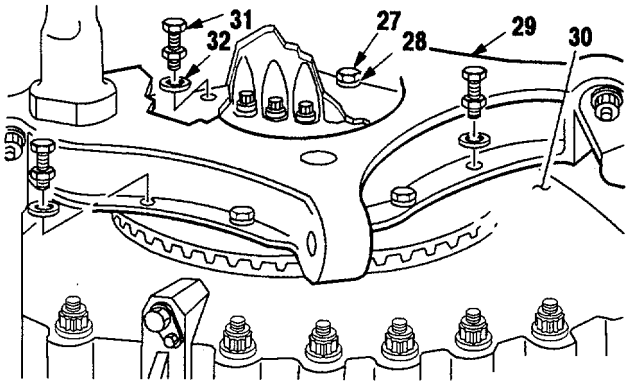

Figure D-23. Jackscrew Removal/Installation

23. Install three jackscrews (31) and washers (32) in open bolt holes and into main transmission (30) (Figure D-23).
24. Remove remaining five transmission mounting bolts (27) and washers (28) from mast support base (29) and main transmission (30) (Figure D-23).
25. Slowly turn jackscrews (31) to lower transmission (30) onto support plate on deck (Figure D-23).
26. Remove three jackscrews (31) and washers (32) from transmission (30) (Figure D-23).

27. Install sling assembly (33) onto upper rotor head assembly (34) and secure with eight quick-release pins (35) (Figure D-24).

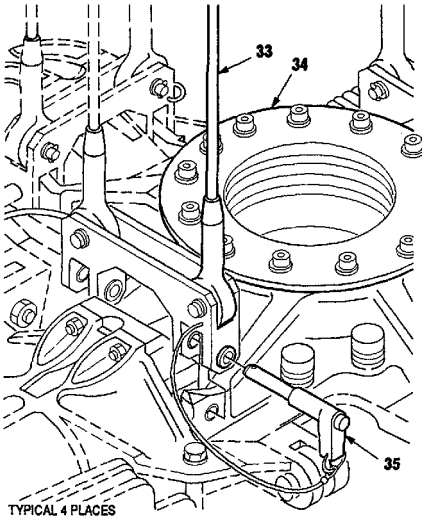

M102-196-1

Figure D-24. Sling Assembly Removal/Installation

28. Connect overhead crane hook (36) to sling assembly (33) (Figure D-25).
29. Apply tension to sling assembly (33) until sling cables (37) are taut (Figure D-25).

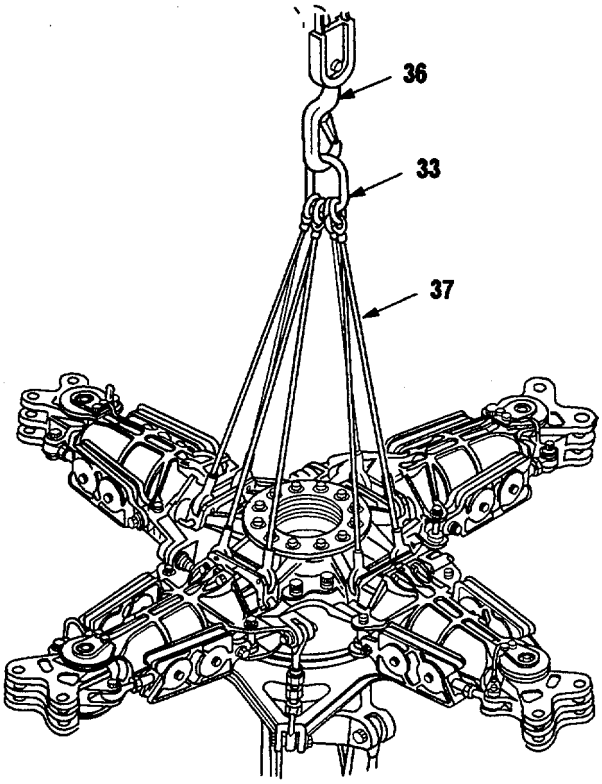

M102-196-2

Figure D-25. Hoist and Sling Assembly Removal/Installation

30. Loosen eight lower transmission strut nuts (38) and bolts (39) from four transmission struts (40). Do not remove from assembly (Figure D-26).

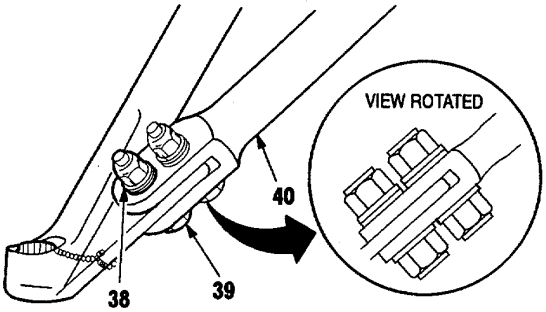

M102-196-31

Figure D-26. Lower Transmission Strut Nuts Loosen/Torque

31. Remove four upper transmission strut bolts (41), washers (42), nuts (43), and cotter pins (44) from mast support base (29) and main transmission support struts (40) (Figure D-27).

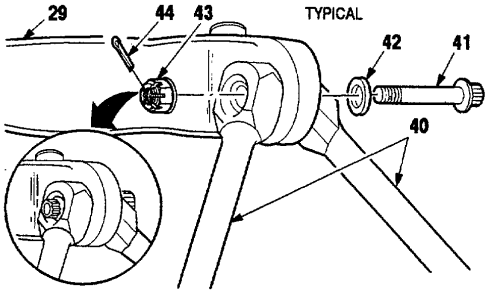

M102-196-32

Figure D-27. Mast Support Base Removal/Installation

WARNING

Hoisted components can cause injury or death if they fall. Keep away from hoisted components and loaded crane. If injury occurs, seek medical aid.

CAUTION

Ensure sufficient clearance exists between mast support base and support struts during removal of upper rotor assembly.

32. Slowly raise upper rotor assembly (34) out of helicopter (45) (Figure D-28).

CAUTION

Protect bottom of rotor assembly from damage and/or contamination while resting on surface or during transportation.

33. Lower upper rotor assembly (34) to surface (Figure D-28).

WARNING

Upper rotor assembly has high center of gravity and is unstable. Ensure upper rotor assembly is properly supported to prevent injury to personnel and/or damage to assembly.

34. Remove sling assembly (33) and eight quick-release pins (35) from upper rotor head assembly (34) (Figure D-24).
35. Remove sling assembly (33) from overhead crane hook (36) (Figure D-28).

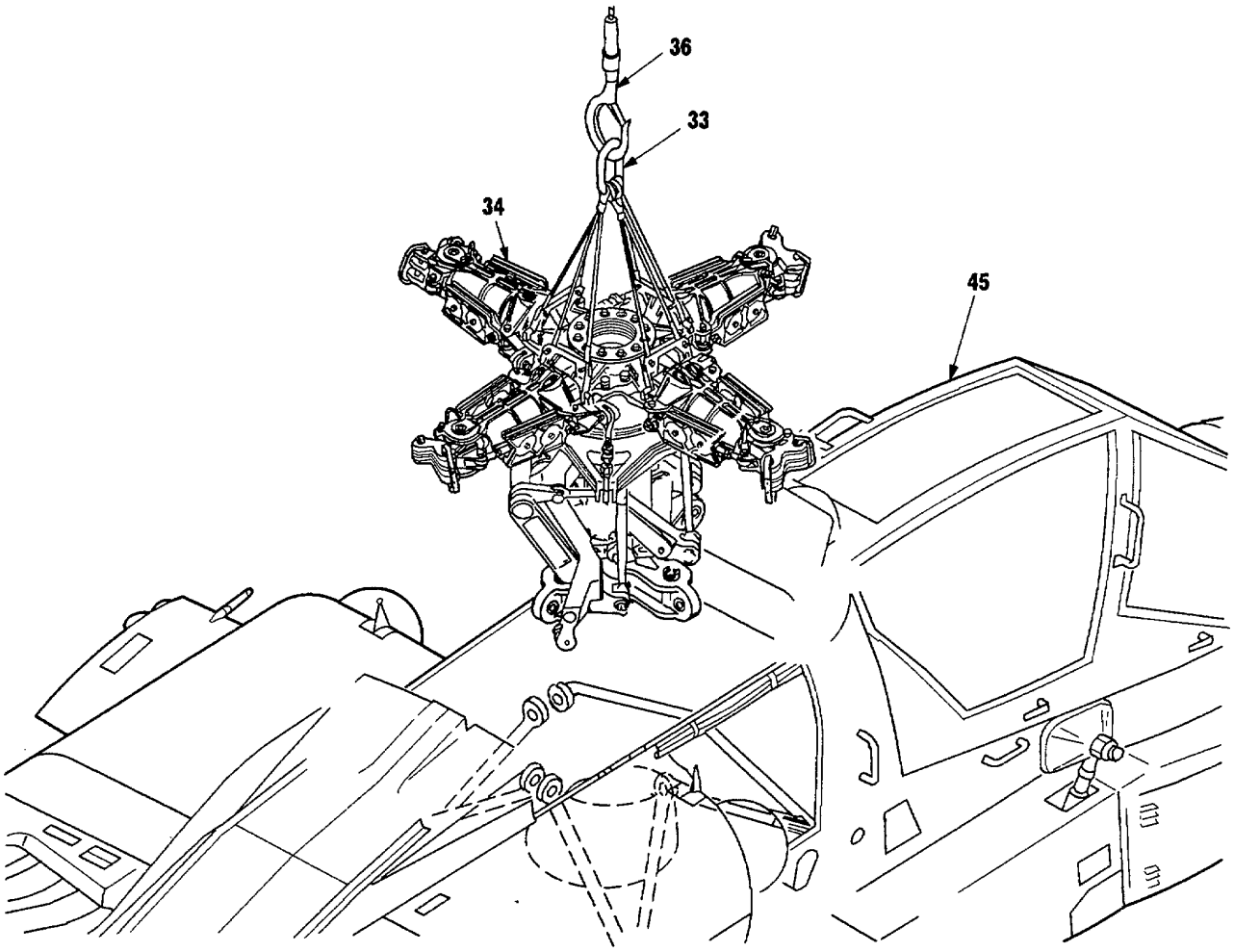

M102-196-68

Figure D-28. Upper Rotor Assembly Removal/Installation

D-3.3.2. Cleaning.

Wipe exposed or removed parts with a clean rag.

D-3.3.3. Inspection.

Inspect upper rotor assembly in accordance with TM 1-1520-238-23.

D-3.3.4. Installation.

1. Install sling assembly (33) to upper rotor head assembly (34) and secure with eight quick-release pins (35) (Figure D-24).
2. Connect overhead crane hook (36) to sling assembly (33) (Figure D-25).

WARNING

Hoisted components can cause injury or death if they fall. Keep away from hoisted components and loaded crane. If injury occurs, seek medical aid.

⚠CAUTION

Ensure sufficient clearance exists between mast support base and support struts during installation of upper rotor assembly.

3. Lift upper rotor assembly (34) and position carefully into helicopter (45). Align mast support base (29) with main transmission support struts (40) (Figures D-27 and D-28).

NOTE

Nuts may be re-used only if run-on torque exceeds **50 INCH-POUNDS**.

4. Install four upper transmission strut bolts (41), washers (42), and nuts (43) through main transmission support struts (40) and mast support base (29). Torque four nuts (43) to **280 FOOTPOUNDS**. Increase torque to align cotter pin holes, but do not exceed **304 FOOT-POUNDS.** Install new cotter pins (44) (Figure D-27).
5. Torque eight lower transmission strut nuts (38) to **600 INCH-POUNDS** (Figure D-26).
6. Remove sling assembly (33) and eight quick-release pins (35) from upper rotor head assembly (34) (Figure D-24).
7. Remove sling assembly (33) from overhead crane hook (36) (Figure D-28).

⚠CAUTION

Three jackscrews must be installed 120 degrees apart and raised/lowered at the same time to prevent damage to aircraft.

8. Install three jackscrews (31) and washers (32) through mast support base (29) and into main transmission (30). Install jackscrews 120 degrees apart (Figure D-23).
9. Slowly turn jackscrews (31) to raise main transmission (30) up to mast support base (29) (Figure D-23).
10. Install five mounting bolts (27) and washers (28) through mast support base (29) and into main transmission (30). Torque five mounting bolts (27) in accordance with TM 1-1520-238-23 to **260 INCH-POUNDS** (Figure D-23).
11. Remove three jackscrews (31) and washers (32) from transmission (30) (Figure D-23).
12. Install remaining three transmission mounting bolts (27) and washers (28) through mast support base (29) and into main transmission (30). Torque three mounting bolts (27) in accordance with TM 1-1520-238-23 to **260 INCH-POUNDS** (Figure D-23).
13. Remove transmission support plate or plywood from deck.
14. Connect engine No. 7 (APU) drive shaft between transmission input flange and drive shaft in accordance with TM 1-1520-238-23.
15. Install drive shaft No. 3 in accordance with TM 1-1520-238-23.
16. Connect engine No. 1 and No. 2 engine input drive shafts between drive shaft and input flexible coupling in accordance with TM 1-1520-238-23.

17. Tighten clamp (24) to install shaft driven compressor inlet housing (25) on shaft driven compressor (26) (Figure D-22).
18. If removed, install bolt (19), washer (20), clamps (21), wire harness (23), and oil line (18) to bracket (22) on aft, right-hand side of transmission (Figure D-21).
19. Connect left and right main transmission oil cooler lines (17) at quick-disconnect couplings (18) on main transmission in accordance with TM 1-1520-238-23 (Figure D-20).
20. If removed, install bolt (13), washer (14), and clamp (15) to bracket (16) on right chip detector of transmission (Figure D-19).
21. Attach connector P950 (11) to dummy receptacle (12) (Figure D-18).
22. Attach connector P2 (8) to receptacle J2 (9) on generator No. 1 (10) (Figure D-17).
23. Connect upper rod ends of longitudinal, collective, and lateral servocylinders to mixer assembly in accordance with TM 1-1520-238-23.
24. Install two screws (3), washers (4), nuts (5), and clamps (6) to mixer right-hand lateral link (7) (Figure D-16).
25. Attach connector P57 (1) to main rotor interrupter magnetic pickup transducer (2) (Figure D-16).
26. Install main rotor gearshaft in accordance with TM 1-1520-238-23.
27. Install main transmission air data system (ADS) standpipe in accordance with TM 1-1520-238-23.
28. Install main rotor flexible support in accordance with TM 1-1520-238-23.
29. Install main rotor drive plate cover in accordance with TM 1-1520-238-23.
30. Install main rotor de-ice power distributor and air data system (ADS) mast in accordance with TM 1-1520-238-23.
31. Install main rotor blades in accordance with TM 1-1520-238-23.
32. Install ECS air duct No. 4 in accordance with TM 1-1520-238-23.
33. Service main transmission in accordance with TM 1-1520-238-23.
34. Inspect (QA).
35. Perform upper controls rig check in accordance with TM 1-1520-238-23.
36. Perform drive system dynamic operational check in accordance with TM 1-1520-238-T.
37. Perform main rotor track and balance in accordance with TM 1-1520-238-T.
38. Install access panels L200 and R200; install fairings L230 and R230; close access doors T205L, T205R, T225A, T225T, T250L, T250R, T290L, T290R, and L325 in accordance with TM 1-1520-238-23.

D-4. TAIL ROTOR GEARBOX ASSEMBLY REMOVAL/INSTALLATION.

D-4.1. Materials/Tools Required:

- Cotter pin assortment kit (item 13, App C)
- Hydraulic fluid (item 18, App C)
- 5/8 x 3/8-inch drive box end torque wrench adapter (item 2, App B)
- Eye bolt (item 6, App B) (p/o item 32, App B)
- 5/8 x 3/8-inch drive open end socket wrench crowfoot attachment (item 10, App B)
- Sling set kit (item 32, App B)
- Universal sling (item 34, App B)
- Aircraft maintenance tool kit (item 38, App B)
- Aircraft mechanic's tool kit (item 39, App B) .
- 30 - 150 inch-pound 1/4-inch drive click type torque wrench (item 49, App B)
- 150 - 750 inch-pound 3/8-inch drive click type torque wrench (item 50, App B)
- 0 - 600 inch-pound 3/8-inch drive dial indicator torque wrench (item 53, App B)

D-4.2. Personnel/Time Required:

- Three persons
- One inspector/supervisor
- 2 hours

D-4.3. Procedural Steps:

NOTE

Procedural steps calling for use of the sling assembly will require use of an overhead portable crane/hoist.

D-4.3.1. Removal.

1. Remove fairings L530, L540, and L546 in accordance with TM 1-1520-238-23.
2. Remove tail rotor connecting link in accordance with TM 1-1520-238-23.
3. Vent primary and utility hydraulic systems in accordance with TM 1-1520-238-23
4. Detach connector P224 (1) from receptacle J224 (2) (Figure D-29).
5. Remove two primary hydraulic lines (3) from servocylinder (4) unions (Figure D-29).

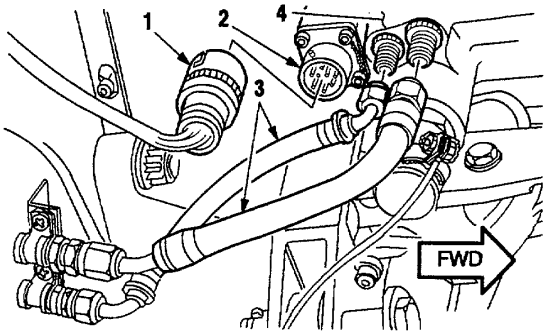

M102-195-3

Figure D-29. Primary Hydraulic Lines Removal/Installation and Connector P224 Detachment/Attachment

6. Remove two utility hydraulic lines (5) from unions '(6) located on forward left-hand side of vertical stabilizer (7) (Figure D-30).

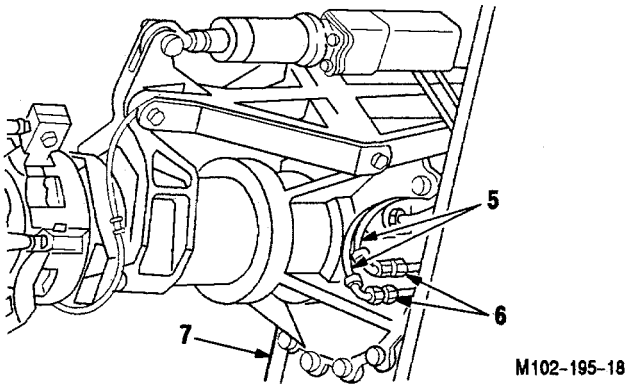

M102-195-18

Figure D-30. Utility Hydraulic Lines Removal/Installation

NOTE

Some aircraft may not have grounding strap.

7. Remove screw (8), washer (9), and nut (10) to remove grounding strap (11) from servocylinder (4) (Figure D-31).

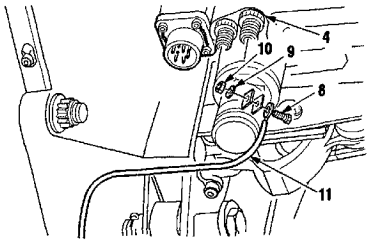

M102-195-4

Figure D-31. Grounding Strap Removal/Installation

8. Detach connectors P215 (12) and P223 (13) from receptacles J215 (14) and J223 (15) located on vertical stabilizer (7) (Figure D-32).

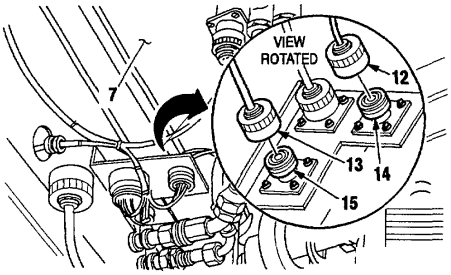

M102-195-5

Figure D-32. Connectors P215 and P223 Detachment/Attachment

9. Remove bolt (16), nut (17), and cotter pin (18) to remove control rod (19) from upper bellcrank (20). Secure rod (19) to fairing bracket (Figure D-33).

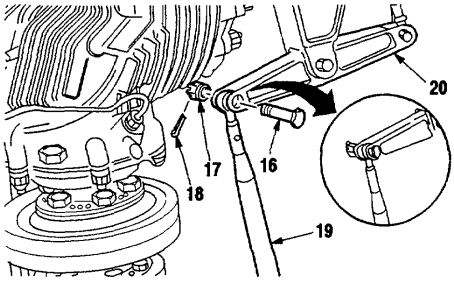

M102-195-6

Figure D-33. Control Rod Removal/Installation

10. Remove five bolts (21) from tail rotor gearbox input flange (22) and input coupling (23) upper flange (Figure D-34).
11. Remove five bolts (24) from input coupling (23) lower flange and No. 6 drive shaft (25) (Figure D-34).

CAUTION

Use suitable padding to stabilize and secure drive shaft to prevent damage.

12. Push down on No. 6 drive shaft (25) and remove inputcoupling (23). Secure drive shaft (Figure D-34).

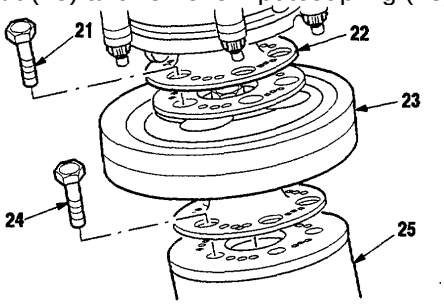

M102-195-7

Figure D-34. No. 6 Driveshaft Removal/Installation

NOTE

Identify tail rotor gearbox sensors and bosses prior to removal.

13. Remove four tail rotor gearbox temperature sensors (26) from tail rotor gearbox (27) bosses (Figure D-35).
14. Remove nut (28) and washer (29) to remove wire harness bracket (30) from tail rotor gearbox (27) (Figure D-35).

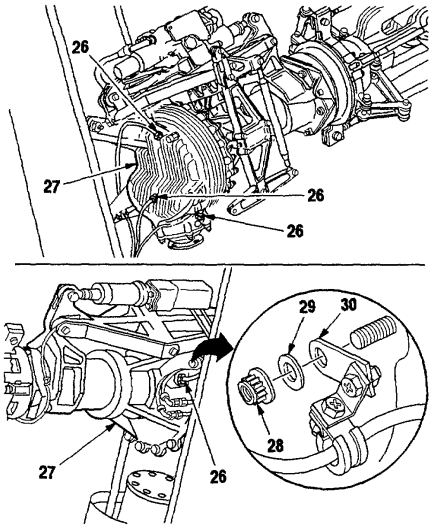

M102-195-17

Figure D-35. Temperature Sensor Removal/Installation

15. Remove three nuts (31) and washers (32) to remove three wire harness brackets (33) from tail rotor gearbox (27) (Figure D-36).

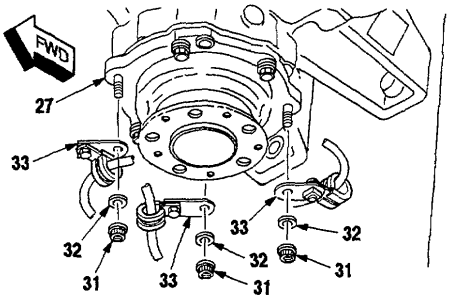

M102-195-13

Figure D-36. Sensor Harness Removal/Installation

NOTE

Spacer exists on inboard clamp only.

16. Remove three screws (34), nuts (35), washers (36), one spacer (37), and clamps (38) to remove de-ice wire harness (39) from brackets (40) (Figure D-37).

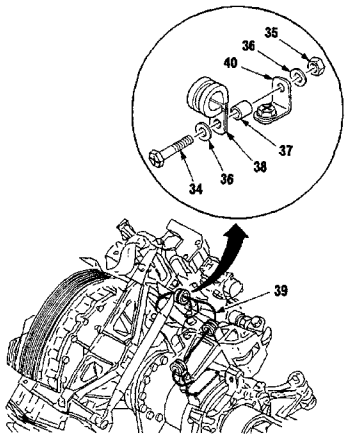

M102-195-20

Figure D-37. De-Ice Wire Harness Clamps Removal/Installation

17. Detach tail rotor brush block (41) from tail rotor swashplate assembly (42) (Figure D-38).
    a. Remove four screws (43) and washers (44) to remove cover (45) and gasket (46).
    b. Remove four captive screws (47) and brush block (41) with de-ice wire harness (39) from swashplate assembly (42).

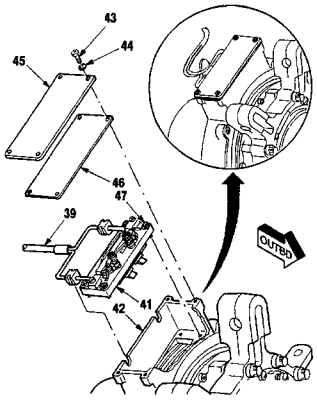

M102-195-10

Figure D-38. Tail Rotor Brush Block Removal/Installation

18. Remove three screws (48), washers (49), nuts (50), and clamps (51) to remove ground strap (52) from brackets (53) on swashplate assembly (42) (Figure D-39).
19. Remove screw (48), nut (50), washer (49), and ground strap (52) from swashplate assembly (42) (Figure D-39).

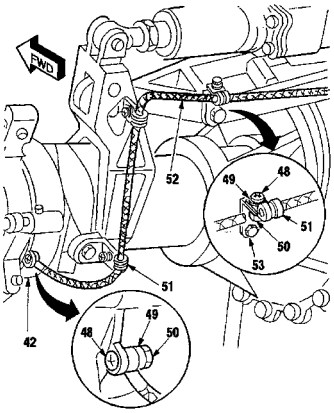

M102-195-19

Figure D-39. Grounding Strap and Wire Clamp Removal/Installation

20. Detach connector P58 (54) from accelerometer (55)located on tail rotor gearbox (27) (Figure D-40).

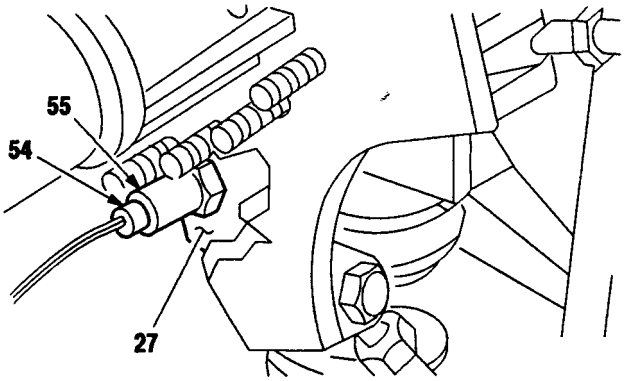

M102-195-12

Figure D-40. Connector P58 Detachment/Attachment

21. Remove three nuts (56), washers (57), bushings (58), and bolts (59) to remove tail rotor gearbox aft strut (60) from gearbox assembly (27) and remove tail rotor gearbox forward strut (61) from helicopter (Figure D-41).

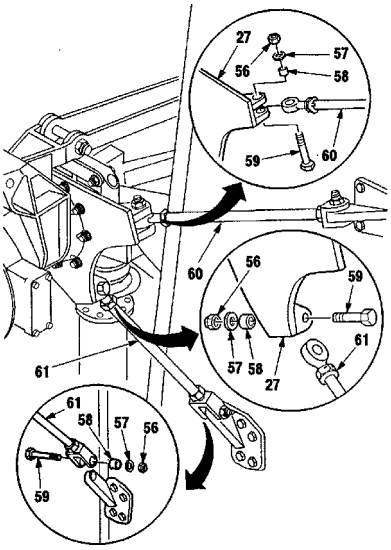

Figure D-41. Tail Rotor Gearbox Strut Remova/Installation

22. Position lifting crane aft of horizontal stabilator.
23. Align crane hook over tail rotor gearbox assembly (27).
24. Install lifting eye bolt (62) into tail rotor gearbox (27) until fully seated (Figure D-42).

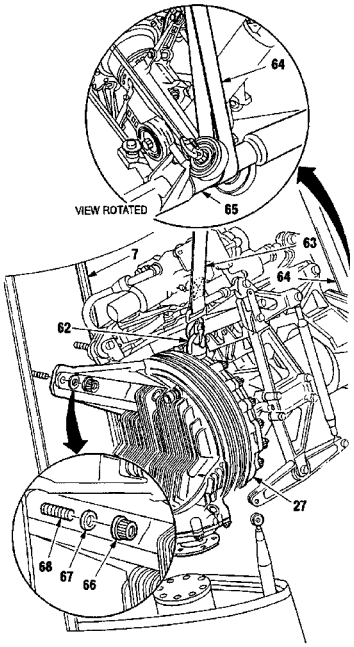

Figure D-42. Tail Rotor Gearbox Assembly Removal/Installation

CAUTION

Ensure that when attaching strap to end of tail rotor hub that strap will not damage or bind on any tail rotor gearbox assembly components during gearbox hoisting.

25. Attach sling assembly (63) to lifting eye bolt (62). Attach strap (64) around tail rotor hub (65). Support tail rotor gearbox assembly (27) by taking up slack on crane hook line (Figure D-42).

WARNING

Hoisted components can cause injury or death if they fall. Keep away from hoisted components and loaded crane. If injury occurs, seek medical aid.

⚠CAUTION

- Sling assembly was originally designed to lift tail rotor gearbox assembly without the swashplate and tail rotor assemblies. Using this procedure will cause an unbalanced condition. Proper care must be exercised to stabilize gearbox assembly during removal from vertical stabilizer.
- Ensure all wiring has been removed and is secured out of way.

26. Remove four nuts (66) and washers (67) from mounting studs (68) to remove tail rotor gearbox assembly (27) from vertical stabilizer (7) (Figure D-42).
27. Remove strap (64), sling assembly (63), and lifting eye bolt (62) from tail rotor hub (65) and tail rotor gearbox assembly (27) (Figure D-42).

D-4.3.2. Cleaning.

Wipe exposed or removed parts with a clean rag.

D-4.3.3. Inspection.

Refer to Chapters 5 and 6 for battle damage criteria.

D-4.3.4. Installation.

1. Install lifting eye bolt (62) into tail rotor gearbox (27) until fully seated (Figure D-42).

⚠CAUTION

Ensure that when attaching strap to end of tail rotor hub that strap will not damage or bind on any tail rotor gearbox assembly components during gearbox hoisting.

2. Attach sling assembly (63) to lifting eye bolt (62). Attach strap (64) around tail rotor hub (65). Support tail rotor gearbox assembly (27) by taking up slack on crane hook line (Figure D-42).

WARNING

Hoisted components can cause injury or death if they fall. Keep away from hoisted components and loaded crane. If injury occurs, seek medical aid.

⚠CAUTION

- Sling assembly was originally designed to lift tail rotor gearbox assembly without the swashplate and tail rotor assemblies. Using this procedure will cause an unbalanced condition. Proper care must be exercised to stabilize gearbox assembly during removal from vertical stabilizer.
- Ensure all wiring has been removed and is secured out of way.

3. Lift tail rotor gearbox assembly (27) (Figure D-42).
4. Position lifting crane aft of horizontal stabilator.
5. Hoist tail rotor gearbox assembly (27) and position onto four mounting studs (68) on vertical stabilizer (7) (Figure D-42).
6. Install four washers (67) and nuts (66) on mounting studs (68). Torque nuts (65) to **655 INCH-POUNDS** (Figure D-42).
7. Remove strap (64), sling assembly (63), and lifting eye bolt (62) from tail rotor hub (65) and tail rotor gearbox assembly (27) (Figure D-42).

NOTE

Adjust struts as required to ensure alignment of strut rod ends and gearbox fitting bolt holes.

8. Install three bolts (59), bushings (58), washers (57), and nuts (56) to install tail rotor gearbox aft strut (60) to gearbox assembly (27) and install tail rotor gearbox forward strut (61) to helicopter. Torque nuts (56) to **300 INCH-POUNDS** (Figure D-41).
9. Attach connector P58 (54) to accelerometer (55) located on tail rotor gearbox (27) (Figure D-40).
10. Install ground strap (52), screw (48), washer (49), and nut (50) to tail rotor swashplate assembly (42) (Figure D-39).
11. Install ground strap (52), three clamps (51), screws (48), washers (49), and nuts (50) to brackets (53) on swashplate assembly (42) (Figure D-39).
12. Attach tail rotor brush block (41) to swashplate assembly (42) (Figure D-38).
    a. Install four captive screws (47) to install brush block (41) with de-ice wire harness (39), into swashplate assembly (42).
    b. Install four screws (43) and washers (44) to install gasket (46) and cover (45) to swashplate assembly (42).

NOTE

Spacer exists on inboard clamp only.

13. Install three screws (34), one spacer (37), washers (36), nuts (35), and clamps (38) to install de-ice wire harness (39) to brackets (40) (Figure D-37).
14. Install three nuts (31) and washers (32) to install three wire harness brackets (33) to tail rotor gearbox (27). Torque nuts to **60 INCH-POUNDS** (Figure D-36).

NOTE

Identify tail rotor gearbox sensors and bosses prior to installation.

15. Install four tail rotor gearbox temperature sensors (26) into tail rotor gearbox (27) bosses. Torque sensors to **30 INCH-POUNDS** (Figure D-35).
16. Install nut (28) and washer (29) to install wire harness bracket (30) to tail rotor gearbox (27). Torque nut to **165 INCH-POUNDS** (Figure D-35).

⚠CAUTION

Check that bolts are installed in 0.250 inch shaft and coupling holes and not in 0.500 inch lightening holes. Otherwise failure of shaft and/or coupling could occur.

17. Push down on No. 6 drive shaft (25) and install input coupling (23) between tail rotor gearbox input flange (22) and No. 6 drive shaft (25) (Figure D-34).
18. Install five bolts (24) through input coupling (23) lower flange into drive shaft (25). Torque five bolts (24) to **125 INCH-POUNDS** (Figure D-34).
19. Install five bolts (21) through tail rotor gearbox input flange (22) and input coupling (23) upper flange. Torque five bolts (21) to **125 INCH-POUNDS** (Figure D-34).
20. Install bolt (16) and nut (17) to install control rod (19) to upper bellcrank (20). Torque nut (17) **to 30 INCH-POUNDS**. Increase torque to align cotter pin hole, but do not exceed **40 INCH-POUNDS**. Install new cotter pin (18) (Figure D-33).
21. Attach connectors P215 (12) and P223 (13) to receptacles J215 (14) and J223 (15) located on vertical stabilizer (7) (Figure D-32).

NOTE

Some aircraft may not have grounding strap.

22. Install screw (8), washer (9), and nut (10) to install grounding strap (11) to servocylinder (4) (Figure D-31).
23. Lubricate threads of unions (6) with clean hydraulic fluid and install utility hydraulic lines (5) on unions (6) located on forward left-hand side of vertical stabilizer (7) (Figure D-30).
24. Lubricate threads of servocylinder (4) unions with clean hydraulic fluid and install primary hydraulic lines (3) to servocylinder (4) unions (Figure D-29).
25. Attach connector P224 (1) to receptacle J224 (2) (Figure D-29).
26. Install tail rotor connecting link in accordance with TM 1-1520-238-23.

27. Service primary and utility hydraulic systems in accordance with TM 1-1520-238-23.
28. Inspect (QA).
29. Perform operational check of primary and utility hydraulic systems in accordance with TM 1-1520-238-T.
30. Perform directional flight controls rigging operational check in accordance with TM 1-1520-238-T.
31. Perform drive system dynamic operational check in accordance with TM 1-1520-238-T.
32. Perform tail rotor track and balance in accordance with TM 1-1520-238-T.
33. Install fairings L530, L540, and L546 in accordance with TM 1-1520-238-23.

D-5. TAIL LANDING GEAR ASSEMBLY REMOVAL/INSTALLATION.

D-5.1. Materials/Tools Required:

- Cotter pin assortment kit (item 13, App C)
- Laminated shim stock (item 53, App C)
- 0.000 - 0.100-inch outside micrometer caliper (item 7, App B)
- 0.0015 - 0.0250-inch thickness gage (item 18, App B)
- 5-ton aircraft landing gear jack (item 20, App B)
- Aircraft mechanic's tool kit (item 39, App B)
- 15/16 & 1-inch box wrench (item 45, App B) .
- 30 - 150 inch-pound 1/4-inch drive click type torque wrench (item 49, App B)
- 0 - 600 inch-pound 3/8-inch drive dial indicator torque wrench (item 53, App B)

D-5.2. Personnel/Time Required:

- Three persons
- One inspector/supervisor
- 2 hours

D-5.3. Procedural Steps:

D-5.3.1. Removal.

WARNING

Helicopter is unstable on jack. Death or injury can result if helicopter falls offjack. Jack helicopter on firm flat surface. Do not jack helicopter if wind is over 15 mph.

NOTE

If jacking on unimproved ground, use plywood or sheet metal to prevent sinking.

1. Lock tail landing gear in accordance with TM 1-1520-238-23.
2. Lift tail landing gear assembly (1) by jacking tailboom (2) in accordance with TM 1-1520-238-23 (Figure D-43).

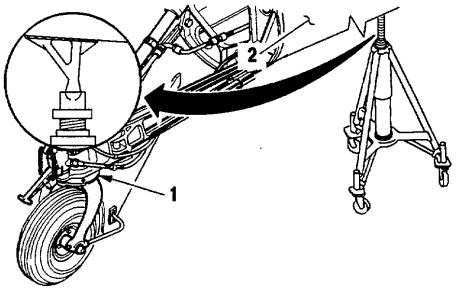

M102-191-1

Figure D-43. Tailboom Jacking Point

NOTE

Do not remove fluid from shock strut.

3. Deflate tail landing gear shock strut of nitrogen in accordance with TM 1-1520-238-23.
4. Remove grounding straps (3) from tailboom frame (4) attach point (Figure D-44).

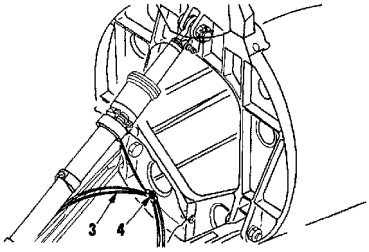

M104-191-16

Figure D-44. Grounding Straps Removal/Installation

5. Remove tail wheel lock actuator hose (5) from union (6) located on left-hand trailing arm (7) (Figure D-45).

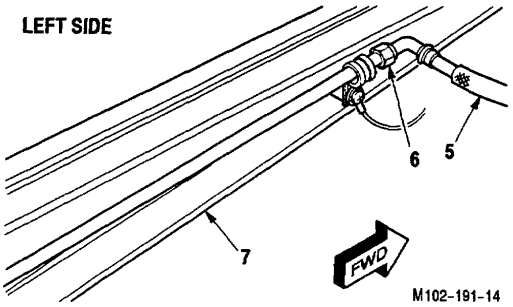

Figure D-45. Tail Wheel Lock Actuator Hose Removal/Installation

6. Detach connector P760 (8) from receptacle J760 (9) located on right-hand trailing arm (10) (Figure D-46).

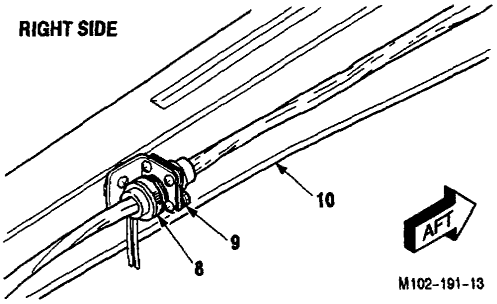

Figure D-46. Connector P760 Detachment/Attachment

7. Remove cotter pin (11), nut (12), washers (13), and bolt (14) to remove shock strut (15) from tailboom frame (4) (Figure D-47).

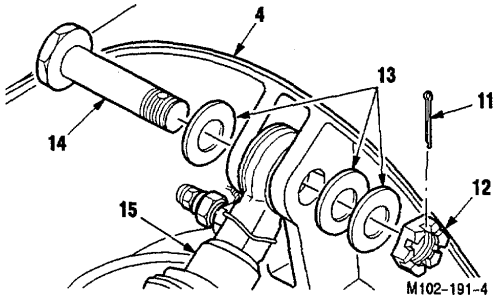

Figure D-47. Shock Strut Removal/Installation

8. Support left hand trailing arm (7) and right hand trailing arm (10) and remove two cotter pins (16), nuts (17), washers (18), and bolts (19) to remove trailing arms (7) and (10) from pivot lugs on tailboom frame (4) (Figure D-48).

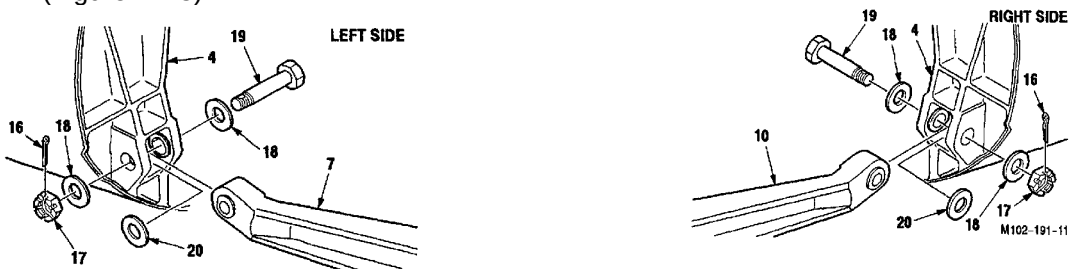

Figure D-48. Trailing Arms Removal/Installation

9. Remove tail landing gear assembly (1) from pivot lugs on tailboom frame (4). Shims (20) will fall out

when trailing arms (7) and (10) are removed (Figure D-48).

D-5.3.2. Cleaning.

1. Wipe shock strut and attaching area with a clean rag.

2. Wipe tail wheel lock tube union with a clean rag.

D-5.3.3. Inspection.

1. Check shock strut for leaks, nicks, dents or cracks. Refer to Chapter 3 for battle damage criteria.

2. Check trailing arms for nicks and dents. Refer to Chapter 3 for battle damage criteria.

D-5.3.4. Installation.

1. Position and support left hand trailing arm (7) and right hand trailing arm (10) into pivot lugs located on tailboom frame (4) (Figure D-48).

2. Measure gap between bushing in trailing arms (7) and (10) and existing bushing in pivot lugs on tailboom frame (4) (Figure D-48).

a. Use thickness gage and record measurement.

b. Subtract 0.003 inch from measurement to determine required shim thickness.

c. Use micrometer to measure laminated shim thickness. Peel off laminates to required thickness.

3. Install shims (20) between trailing arms (7) and (10) and pivot lugs on tailboom frame (4), to outboard sides of trailing arms (7) and (10) (figure D-48).

4. Install bolts (19), washers (18), and nuts (17) through tailboom frame (4) lugs and trailing arms (7) and (10). Torque nuts (17) to **135 INCH POUNDS**. Increase torque to align cotter pin holes, but do no exceed **150 INCH-POUNDS**. Install new cotter pins (16) (Figure D-48).

5. Install bolt (14), washers (13), and nut (12) to install shock strut (15) to tailboom frame (4) lug. Torque nut (12) to **400 INCH-POUNDS**. Increase torque to align cotter pin hole, but do not exceed **440 INCH-POUNDS**. Install new cotter pin (11) (Figure D-47).

6. Attach connector P760 (8) to receptacle J760 (9) located on right-hand trailing arm (10) (Figure D-46).

7. Install tail wheel lock actuator hose (5) to union (6) located on left-hand trailing arm (7) (Figure D-45).

8. Install five grounding straps (3) to tailboom frame (4) attach point (Figure D-44).

9. Inspect (QA).

10. Unlock tail landing gear in accordance with TM 1-1520-238-23.

11. Service tail landing gear shock strut with nitrogen in accordance with TM 1-1520-238-23.

12. Service utility hydraulic system in accordance with TM 1-1520-238-23.

13. Remove jack from tailboom (2) in accordance with TM 1-1520-238-23 (Figure D-43).

D-6. MAIN LANDING GEAR REMOVAL/INSTALLATION.

D-6.1. Procedural Steps:

1. Remove main landing gear in accordance with TM 1-1520-238-23.

NOTE

The main landing gear wheel and tire assembly does not need to be removed to perform this procedure.

2. Install main landing gear in accordance with TM 1-1520-238-23.

D-7. WING/PYLON REMOVAL/INSTALLATION.

D-7.1. Procedural Steps:

1. Remove wing(s) and/or pylon(s) in accordance with TM 1-1520-238-23.

WARNING

- To prevent personnel injury and equipment damage, four persons must lift and carry the wing during removal.
- If pylons are installed, six people will be required to carry wing.

NOTE

- Pylons may remain on with no attached ordnance.
- Right wing removal and installation is similar to left wing.

2. Install wing(s) and/or pylon(s) in accordance with TM 1-1520-238-23.

APPENDIX E
SUBSTITUTE MATERIALS AND PARTS

BDAR TM PROCEDURES. THE EXPEDIENT REPAIR PROCEDURES IN BDAR TM ARE FOR USE IN COMBAT ONLY. STANDARD MAINTENANCE/REPAIR PROCEDURES ARE TO BE USED AS SOON THEREAFTER AS POSSIBLE.

SECTION I. INTRODUCTION

E-1. GENERAL.

This appendix lists substitute/alternate materials and parts. Section II contains part number data for airframe structural components, surfaces, and members with interchangeability cross-references to the aircrafts' tail number. Section III contains O-ring, packing, and gasket substitution information. Section IV contains petroleum, oil, and lubricant substitution and blending information. Section V contains a substitute table for structural metal alloys. Section VI contains a substitute table for structural metal fasteners.

SECTION II. INTERCHANGEABLE PARTS

E-2. GENERAL.

This section lists interchangeable structural components, surfaces, and members of the airframe, cross referenced by the primary part number to the aircrafts' tail number effectivity. This table may be used to assist cross-referencing of structural parts/components provided from cannibalized aircraft.

Table E-1. Structural Interchangeability - Replaceability List

Part Number	Nomenclature	Tail Number Effectivity
7-111210133-39	Door Assy, Refueling Panel	82-23355 thru 84-24311
7-111210133-47	Door Assy, Refueling Panel	85-25351 thru subsequent
7-111210153-21	Door, Aft Fuel Dump Valve	82-23355 thru subsequent
7-111210196-21	Door Assy, Fuel Drain	82-23355 thru subsequent
7-111220120-21	Door Assy, Stowage Access, LH	82-23355 thru subsequent
7-111220120-22	Door Assy, Stowage Access, RH	82-23355 thru subsequent
7-211113181	Panel Assy - F.S. 230.00, Fuel Cell	82-23355 thru subsequent
7-211113303-3	Panel Assy, Treadway	82-23355 thru subsequent
7-211113303-5	Panel Assy, Treadway	82-23355 thru subsequent
7-211113303-7	Panel Assy, Treadway	82-23355 thru subsequent

Table E-1. Structural Interchangeability-Replaceability List - Cont

Part Number	Nomenclature	Tail Number Effectivity
7-211113303-13	Panel Assy, Treadway	82-23355 thru subsequent
7-211113523-29	Structure Assy, Doppler	82-23355 thru subsequent
7-311111010-19	Cover - F.S. 35.50	82-23355 thru subsequent
7-311111110-25	Door	82-23355 thru subsequent
7-311111127-21	Fairing Assy, Ammo Chute, RH	82-23355 thru subsequent
7-311111142-5	Access Door, Controls	82-23355 thru 88-0199
7-311111142-9	Access Door, Controls	82-23355 thru subsequent
7-311111147-1	Door Assy, Elect Shelf - F.S. 35.50, LH	82-23355 thru 84-24211
7-311111147-21	Door Assy, Elect Shelf - F.S. 35.50, LH	84-24212 thru 88-0199
7-311111147-25	Door Assy, Elect Shelf - F.S. 35.50, LH	82-23355 thru subsequent
7-311111147-2	Door Assy, Elect Shelf - F.S. 35.50, RH	82-23355 thru 84-24211
7-311111147-22	Door Assy, Elect Shelf - F.S. 35.50, RH	84-24212 thru 88-0199
7-311111147-26	Door Assy, Elect Shelf - F.S. 35.50, RH	82-23355 thru subsequent
7-311111160	Door Canopy Release	82-23355 thru subsequent
7-311111168-3	Fairing Assy, Gun - F.S. 103.00	82-23355 thru 84-24203
7-311111168-37	Fairing Assy, Gun - F.S. 103.00	84-24204 thru 86-9001
7-311111168-35	Fairing Assy, Gun - F.S. 103.00	82-23355 thru 84-24203
7-311111168-39	Fairing Assy, Gun - F.S. 103.00	84-24204 thru subsequent
7-311111168-601	Fairing Assy, Gun - F.S. 103.00	86-9002 thru subsequent
7-311111210-1	Access Door - F.S. 35.00-46.00	82-23355 thru subsequent
7-311111210-3	Access Door - F.S. 35.00-46.00	82-23355 thru subsequent
7-311111211-5	Access Door Assy	82-23355 thru 88-0199
7-311111211-6	Access Door Assy	82-23355 thru 88-0199
7-311111211-9	Access Door Assy	82-23355 thru subsequent
7-311111211-10	Access Door Assy	82-23355 thru subsequent
7-311111212-5	Access Door - F.S. 80.50-91.70	82-23355 thru subsequent

Table E-1. Structural Interchangeability - Replaceability List - Cont

Part Number	Nomenclature	Tail Number Effectivity
7-311111212-6	Access Door - F.S. 80.50-91.70	82-23355 thru subsequent
7-311111223-601	Fairing Assy, FWD Avionics Bay	84-24200 thru 85-25378
7-311111223-602	Fairing Assy, FWD Avionics Bay	82-23355 thru subsequent
7-311111223-603	Fairing Assy, FWD Avionics Bay	85-25379 thru 88-0197
7-311111223-604	Fairing Assy, FWD Avionics Bay	85-25379 thru 88-0197
7-311111223-605	Fairing Assy, FWD Avionics Bay	82-23355 thru subsequent
7-311111223-606	Fairing Assy, FWD Avionics Bay	82-23355 thru subsequent
7-311111224-2	Door Assy, FWD Avionics Bay, RH	82-23355 thru 88-0199
7-311111224-37	Door Assy, FWD Avionics Bay, LH	86-8940 thru 88-0199
7-311111224-45	Door Assy, FWD Avionics Bay, LH	82-23355 thru subsequent
7-311111224-46	Door Assy, FWD Avionics Bay, RH	82-23355 thru subsequent
7-311111231	Door Assy, Ground Service Access	82-23355 thru 83-23834
7-311111231-7	Door Assy, Ground Service Access	84-24200 thru subsequent
7-311111239-1	Cover Access, FWD Avionics Bay, LH	82-23355 thru subsequent
7-311111239-2	Cover Access, FWD Avionics Bay, RH	82-23355 thru subsequent
7-311111241-1	Cover Access, FWD Avionics Bay, LH	82-23355 thru subsequent
7-311111241-2	Cover Access, FWD Avionics Bay, RH	82-23355 thru subsequent
7-3111112008	Door Assy, RH FWD Canopy	82-23355 thru subsequent
7-3111112008-65	Cover, FWD Door Canopy	82-23355 thru subsequent
7-3111112008-69	Cover, FWD Door Canopy	82-23355 thru subsequent
7-3111112008-73	Cover, FWD Door Canopy	82-23355 thru subsequent
7-3111112008-75	Cover, FWD Door Canopy	82-23355 thru subsequent
7-3111112009	Door Assy, RH Pilot's Canopy	82-23355 thru subsequent
7-311111200-61	Cover, Door, Pilot's Canopy	82-23355 thru subsequent
7-311111200-63	Cover, Door, Pilot's Canopy	82-23355 thru subsequent
7-311111200-19	Cover Assy, Canopy	82-23355 thru subsequent

Table E-1. Structural Interchangeability-Replaceability List - Cont

Part Number	Nomenclature	Tail Number Effectivity
7-311112015-3	Windshield, FWD	82-23355 thru 82-23365
7-311112015-5	Windshield, Upper	82-23355 thru 82-23365
7-311112015-7	Panel, LH FWD Transparency	82-23355 thru subsequent
7-311112015-9	Panel, RH FWD Transparency	82-23355 thru subsequent
7-311112015-11	Panel, LH AFT Transparency	82-23355 thru subsequent
7-311112015-13	Panel, RH AFT Transparency	82-23355 thru subsequent
7-311112015-15	Panel, Upper Transparency	82-23355 thru subsequent
7-311112015-17	Windshield, FWD	83-23787 thru subsequent
7-311112015-19	Windshield, Upper	83-23787 thru subsequent
7-311112017-5	Severance Assy, FWD LH	82-23355 thru subsequent
7-311112017-7	Severance Assy, AFT LH	82-23355 thru subsequent
7-311112017-9	Severance Assy, Copilot Door	82-23355 thru subsequent
7-311112017-11	Severance Assy, Pilot Door	82-23355 thru subsequent
7-311112200-3	Door Assy, Copilot	82-23355 thru subsequent
7-311112200-5	Door Assy, Pilot	82-23355 thru subsequent
7-311113231-5	Door - F.S. 154.30-163.42	82-23355 thru subsequent
7-311113255	Door Access - F.S. 125.00-135.00	82-23355 thru subsequent
7-311113270-165	Door (Deck Assy)	82-23355 thru subsequent
7-311113270-169	Door (Deck Assy)	82-23355 thru subsequent
7-311113270-171	Door (Deck Assy)	82-23355 thru subsequent
7-311113270-173	Door (Deck Assy)	82-23355 thru subsequent
7-311113270-175	Door (Deck Assy)	82-23355 thru subsequent
7-311113270-179	Door (Deck Assy)	82-23355 thru subsequent
7-311113270-261	Door (Deck Assy)	82-23355 thru subsequent
7-311113270-263	Door (Deck Assy)	82-23355 thru subsequent
7-311113270-283	Door Half Assy	82-23355 thru subsequent

Table E-1. Structural Interchangeability-Replaceability List - Cont

Part Number	Nomenclature	Tail Number Effectivity
7-311113270-285	Door Half Assy	82-23355 thru subsequent
7-311113270-365	Door Assy	86-8958 thru subsequent
7-311113315	HARS Support	82-23355 thru subsequent
7-311113346	Cover Assy, Control Linkage, Pilot	82-23355 thru subsequent
7-311113381-1	Fairing Assy, Shock Strut	82-23355 thru subsequent
7-311113381-2	Fairing Assy, Shock Strut	82-23355 thru subsequent
7-311113409-1	Mount, Shock Strut, Main Landing Gear, LH	82-23355 thru 84-24219
7-311113409-3	Mount, Shock Strut, Main Landing Gear, LH	82-23355 thru subsequent
7-311113409-2	Mount, Shock Strut, Main Landing Gear, RH	82-23355 thru 84-24219
7-311113409-4	Mount, Shock Strut, Main Landing Gear, RH	82-23355 thru subsequent
7-311113420-17	Door Assy, Ammo Bay	82-23355 thru subsequent
7-311113510-3	Panel Assy, Fuel Cell Access	82-23355 thru 83-23797
7-311113510-11	Panel Assy, Fuel Cell Access	83-23798 thru subsequent
7-311113531	Door Assy, Ext Pwr Rect Fuse, RH - F.S. 345.00	82-23355 thru subsequent
7-311113602-37	Door Assy, Bulkhead Assy - F.S. 280.00	82-23355 thru subsequent
7-311113683-21	Door, Floor Assy - F.S. 126.00	82-23355 thru subsequent
7-311113683-25	Door, Floor Assy - F.S. 126.00	82-23355 thru subsequent
7-311113683-31	Door, Floor Assy - F.S. 144.00	82-23355 thru subsequent
7-311113683-39	Support Assy	82-23355 thru subsequent
7-311113690-1	Access Door, Elect LH	82-23355 thru 84-24231
7-311113690-2	Access Door, Elect RH	82-23355 thru 83-23792
7-311113690-37	Access Door, Elect RH	83-23793 thru 84-24231
7-311113690-44	Access Door, Elect RH	84-24232 thru 88-0199
7-311113690-45	Access Door, Elect LH	84-24232 thru 88-0199
7-311113690-50	Access Door, Elect RH	82-23355 thru subsequent
7-311113690-61	Access Door, Elect LH	82-23355 thru subsequent

Table E-1. Structural Interchangeability-Replaceability List - Cont

Part Number	Nomenclature	Tail Number Effectivity
7-211123612	Tip, Fairing - B.L. 64.00	82-23355 thru subsequent
7-211123626-7	Door Assy, Stabilator	82-23355 thru subsequent
7-311122601	Spar Box Assy, Vertical Stabilizer	82-23355 thru 83-23834
7-311122601-29	Spar Box Assy, Vertical Stabilizer	84-24200 thru 84-24246
7-311122601-31	Spar Box Assy, Vertical Stabilizer	82-23355 thru subsequent
7-311122601-33	Spar Box Assy, Vertical Stabilizer	82-23355 thru subsequent
7-311122620-29	Fairing, Lower Leading Edge, Vertical Stabilizer, LH	82-23355 thru 83-23816
7-311122620-35	Fairing, Lower Leading Edge, Vertical Stabilizer, LH	83-23817 thru 83-23834
7-311122620-39	Fairing, Lower Leading Edge, Vertical Stabilizer, LH	84-24200 thru 88-0199
7-311122620-47	Fairing, Lower Leading Edge, Vertical Stabilizer, LH	88-0200 thru subsequent
7-311122620-30	Fairing, Lower Leading Edge, Vertical Stabilizer, RH	82-23355 thru 88-0199
7-311122620-48	Fairing, Lower Leading Edge, Vertical Stabilizer, RH	88-0200 thru subsequent
7-311122621-3	Fairing Assy, Upper Leading Edge, Vertical Stabilizer	82-23355 thru 83-23793
7-311122621-5	Fairing Assy, Upper Leading Edge, Vertical Stabilizer	82-23355 thru 83-23826
7-311122621-39	Fairing Assy, Upper Leading Edge, Vertical Stabilizer	83-23794 thru 83-23826
7-311122621-57	Fairing Assy, Upper Leading Edge, Vertical Stabilizer	83-23827 thru 88-0199
7-311122621-59	Fairing Assy, Upper Leading Edge, Vertical Stabilizer	83-23827 thru 88-0199
7-311122621-75	Fairing Assy, Upper Leading Edge, Vertical Stabilizer	88-0200 thru 89-0263
7-311122621-77	Fairing Assy, Upper Leading Edge, Vertical Stabilizer	88-0200 thru 89-0263

Table E-1. Structural Interchangeability-Replaceability List - Cont

Part Number	Nomenclature	Tail Number Effectivity
7-311122622	Fairing, Center Leading Edge, Vertical Stabilizer	82-23355 thru 88-0199
7-311122622-601	Fairing Assy, Center Leading Edge, Vertical Stabilizer	82-23355 thru subsequent
7-311122630	Antenna, Trailing Edge Assy, Vertical Stabilizer	82-23355 thru subsequent
7-311122640-3	Tip Assy, Vertical Stabilizer	82-23355 thru subsequent
7-311122640-43	Tip Assy, Vertical Stabilizer	83-23787 thru 83-23819
7-311122640-61	Tip Assy, Vertical Stabilizer	82-23355 thru 82-23365
7-311122640-71	Tip Assy, Vertical Stabilizer	82-23355 thru 84-24262
7-311122640-73	Tip Assy, Vertical Stabilizer	82-23355 thru 88-0257
7-311122640-83	Tip Assy, Vertical Stabilizer	82-23355 thru subsequent
7-311122640-87	Tip Assy, Vertical Stabilizer	82-23355 thru subsequent
7-311123600	Stabilator Assy	82-23355 thru subsequent
7-311130115-1	Fairing Assy, Upper, LH	82-23355 thru subsequent
7-311130115-2	Fairing Assy, Upper, RH	82-23355 thru subsequent
7-311130116-1	Fairing Assy, Upper, LH	82-23355 thru subsequent
7-311130116-2	Fairing Assy, Upper, RH	82-23355 thru subsequent
7-311130200-1	Wing Assy, LH	82-23355 thru 83-23790
7-311130200-2	Wing Assy, RH	82-23355 thru 83-23790
7-311130200-601	Wing Assy, LH	82-23355 thru subsequent
7-311130200-602	Wing Assy, RH	82-23355 thru subsequent
7-311130230-9	Cover, Wing, Upper LH and RH	82-23355 thru subsequent
7-311130230-11	Cover, Wing, Upper LH and RH	82-23355 thru subsequent
7-311130230-13	Cover, Wing, Upper LH and RH	82-23355 thru subsequent
7-311130290-3	Trailing Edge Assy, LH	82-23355 thru subsequent
7-311130290-4	Trailing Edge Assy, RH	82-23355 thru subsequent
7-311140081-1	Shroud Assy, Upper, LH	82-23355 thru 84-24215

Table E-1. Structural Interchangeability-Replaceability List - Cont

Part Number	Nomenclature	Tail Number Effectivity
7-311140081-2	Shroud Assy, Upper, RH	82-23355 thru 84-24215
7-311140081-23	Shroud Assy, Upper, LH	84-24216 thru 85-25372
7-311140081-24	Shroud Assy, Upper, RH	84-24216 thru 85-25372
7-311140081-27	Shroud Assy, Upper, LH	82-23355 thru subsequent
7-311140081-28	Shroud Assy, Upper, RH	82-23355 thru subsequent
7-311140082-1	Shroud Assy, Upper, LH	82-23355 thru 83-23801
7-311140082-2	Shroud Assy, Upper, RH	82-23355 thru 83-23801
7-311140082-31	Shroud Assy, Upper, LH	82-23355 thru subsequent
7-311140082-32	Shroud Assy, Upper, RH	82-23355 thru subsequent
7-311140110-1	Nacelle Assy, Engine, LH	82-23355 thru 84-24242
7-311140110-2	Nacelle Assy, Engine, RH	82-23355 thru 84-24242
7-311140110-53	Nacelle Assy, Engine, LH	82-23355 thru subsequent
7-311140110-54	Nacelle Assy, Engine, RH	82-23355 thru subsequent
7-311140121-3	Door Assy, Engine Vent, LH	82-23355 thru subsequent
7-311140121-4	Door Assy, Engine Vent, RH	82-23355 thru subsequent
7-311140121-5	Door Assy, Engine Vent, LH	82-23355 thru subsequent
7-311140121-6	Door Assy, Engine Vent, RH	82-23355 thru subsequent
7-311140129-1	Door Assy, Sight Oil Level, LH	82-23355 thru subsequent
7-311140129-2	Door Assy, Sight Oil Level, RH	82-23355 thru subsequent
7-311140130-1	Door Assy, Nacelle Platform, LH	82-23355 thru subsequent
7-311140130-2	Door Assy, Nacelle Platform, RH	82-23355 thru subsequent
7-311140143	Door Assy, Fire Extinguisher Emergency Access	82-23355 thru subsequent
7-311140155-1	Door Assy, Water Wash, LH	82-23355 thru subsequent
7-311140155-2	Door Assy, Water Wash, RH	82-23355 thru subsequent
7-311140159	Door Assy, APU Sight Tube	82-23355 thru subsequent
7-311140160-1	Air Inlet Assy, Engine, LH	82-23355 thru 85-25428

Table E-1. Structural Interchangeability-Replaceability List - Cont

Part Number	Nomenclature	Tail Number Effectivity
7-311140160-2	Air Inlet Assy, Engine, RH	82-23355 thru 85-25428
7-311140160-39	Air Inlet Assy, Engine, LH	82-23355 thru subsequent
7-311140160-40	Air Inlet Assy, Engine, RH	82-23355 thru subsequent
7-311140171-1	Fairing Assy, Engine Nose Gearbox, Upper, LH	82-23355 thru 83-23814
7-311140171-2	Fairing Assy, Engine Nose Gearbox, Upper, RH	82-23355 thru 83-23814
7-311140171-51	Fairing Assy, Engine Nose Gearbox, Upper, LH	83-23815 thru 83-23834
7-311140171-52	Fairing Assy, Engine Nose Gearbox, Upper, RH	83-23815 thru 83-23834
7-311140171-57	Fairing Assy, Engine Nose Gearbox, Upper, LH	82-23355 thru subsequent
7-311140171-58	Fairing Assy, Engine Nose Gearbox, Upper, RH	82-23355 thru subsequent
7-311140174-55	Fairing Assy, Engine Nose Gearbox, Lower Aft, LH	82-23355 thru subsequent
7-311140174-56	Fairing Assy, Engine Nose Gearbox, Lower Aft, RH	82-23355 thru subsequent
7-311140175-1	Fairing Assy, HTR, Fwd, Engine Nose Gearbox, LH	82-23355 thru 82-23365
7-311140175-2	Fairing Assy, HTR, Fwd, Engine Nose Gearbox, RH	82-23355 thru 82-23365
7-311140175-5	Fairing Assy, HTR, Fwd, Engine Nose Gearbox, LH	83-23787 thru 84-24259
7-311140175-6	Fairing Assy, HTR, Fwd, Engine Nose Gearbox, RH	83-23787 thru 84-24259
7-311140175-7	Fairing Assy, HTR, Fwd, Engine Nose Gearbox, LH	84-24260 thru 85-25464
7-311140175-8	Fairing Assy, HTR, Fwd, Engine Nose Gearbox, RH	84-24260 thru 85-25464
7-311140175-9	Fairing Assy, HTR, Fwd, Engine Nose Gearbox, LH	82-23355 thru subsequent
7-311140175-10	Fairing Assy, HTR, Fwd, Engine Nose Gearbox, RH	82-23355 thru subsequent
7-311140177-1	Door Assy, Engine Access, LH	82-23355 thru subsequent
7-311140177-2	Door Assy, Engine Access, RH	82-23355 thru subsequent
7-311140178	Access Door, Inboard Engine Nacelle	82-23355 thru subsequent
7-311140182-51	Fairing Assy, Nacelle - F.S. 284.00-303.00, LH	82-23355 thru 83-23828
7-311140182-52	Fairing Assy, Nacelle - F.S. 284.00-303.00, RH	82-23355 thru 83-23828
7-311140182-55	Fairing Assy, Nacelle - F.S. 284.00-303.00, LH	83-23829 thru subsequent
7-311140182-56	Fairing Assy, Nacelle - F.S. 284.00-303.00, RH	83-23829 thru subsequent

Table E-1. Structural Interchangeability-Replaceability List - Cont

Part Number	Nomenclature	Tail Number Effectivity
7-311140182-77	Fairing Assy, Nacelle - F.S. 284.00-303.00, LH	82-23355 thru subsequent
7-311140182-78	Fairing Assy, Nacelle - F.S. 284.00-303.00, RH	82-23355 thru subsequent
7-3111401843	Door Assy, Engine Air Start	82-23355 thru subsequent
7-311150110-19	Fairing Assy - F.S. 340.00-370.00	82-23355 thru 83-23823
7-311150110-35	Fairing Assy - F.S. 340.00-370.00	83-23824 thru 88-0199
7-311150110-43	Fairing Assy - F.S. 340.00-370.00	82-23355 thru subsequent
7-311150110-21	Frame Assy - F.S. 340.00-370.00	82-23355 thru 88-0199
7-311150110-39	Frame Assy - F.S. 340.00-370.00	82-23355 thru 88-0199
7-311150110-45	Frame Assy - F.S. 340.00-370.00	82-23355 thru subsequent
7-311150111-11	Fairing Assy, RH - F.S. 270.00-313.50	82-23355 thru 88-0199
7-311150111-69	Fairing Assy, RH - F.S. 270.00-313.50	82-23355 thru 88-0199
7-311150111-89	Fairing Assy, RH - F.S. 270.00-313.50	82-23355 thru subsequent
7-311150112-3	Panel Assy, Transmission Access, LH	82-23355 thru 84-24210
7-311150112-4	Panel Assy, Transmission Access, RH	82-23355 thru 84-24210
7-311150112-49	Panel Assy, Transmission Access, LH	84-24211 thru 88-0199
7-311150112-50	Panel Assy, Transmission Access, RH	84-24211 thru 88-0199
7-311150112-55	Panel Assy, Transmission Access, LH	82-23355 thru subsequent
7-311150112-56	Panel Assy, Transmission Access, RH	82-23355 thru subsequent
7-311150112-9	Door Assy, Transmission Assy	82-23355 thru 88-0199
7-311150112-11	Door Assy, Transmission Assy	82-23355 thru 88-0199
7-311150112-59	Door Assy, Transmission Assy	82-23355 thru subsequent
7-311150113-11	Support Assy, Transmission Access, LH	82-23355 thru 88-0199
7-311150113-12	Support Assy, Transmission Access, RH	82-23355 thru 88-0199
7-311150113-23	Support Assy, Transmission Access, LH	82-23355 thru 88-0199
7-311150113-24	Support Assy, Transmission Access, RH	82-23355 thru 88-0199
7-311150113-25	Support Assy, Transmission Access, LH	82-23355 thru subsequent

Table E-1. Structural Interchangeability-Replaceability List - Cont

Part Number	Nomenclature	Tail Number Effectivity
7-311150113-26	Support Assy, Transmission Access, RH	82-23355 thru subsequent
7-311150114-67	Support Assy, Door Hinges, LH	82-23355 thru subsequent
7-311150114-68	Support Assy, Door Hinges, RH	82-23355 thru subsequent
7-311150115-21	Fairing Assy, Main Rotor Shaft, LH	82-23355 thru 88-0199
7-311150115-22	Fairing Assy, Main Rotor, RH	82-23355 thru 84-24223
7-311150115-24	Fairing Assy, Main Rotor, RH	84-24224 thru 85-25464
7-311150115-27	Fairing Assy, Main Rotor, LH	85-25465 thru 88-0199
7-311150115-29	Fairing Assy, Main Rotor, LH	82-23355 thru subsequent
7-311150115-30	Fairing Assy, Main Rotor, RH	82-23355 thru subsequent
7-311150117-3	Longeron Assy, Upper Fuselage Fairing	82-23355 thru 88-0199
7-311150117-4	Longeron Assy, Upper Fuselage Fairing	82-23355 thru 88-0199
7-311150117-13	Longeron Assy, Upper Fuselage Fairing	82-23355 thru 90-0309
7-311150117-14	Longeron Assy, Upper Fuselage Fairing	82-23355 thru 90-0309
7-311150117-17	Longeron Assy, Upper Fuselage Fairing	82-23355 thru subsequent
7-311150117-18	Longeron Assy, Upper Fuselage Fairing	82-23355 thru subsequent
7-311150119-3	Fairing/Louver Assy - F.S. 221.00-247.00	82-23355 thru 83-23805
7-311150119-4	Fairing/Louver Assy - F.S. 221.00-247.00	82-23355 thru 83-23805
7-311150119-9	Fairing/Louver Assy - F.S. 221.00-247.00	83-23806 thru 86-9010
7-811150119-10	Fairing/Louver Assy - F.S. 221.00-247.00	83-23806 thru 86-9010
7-311150119-13	Fairing/Louver Assy - F.S. 221.00-247.00	86-9011 thru subsequent
7-311150119-14	Fairing/Louver Assy - F.S. 221.00-247.00	86-9011 thru subsequent
7-311150122-11	Door Assy, Upper Fuselage - F.S. 270.00-313.50, LH	82-23355 thru 88-0199
7-311150122-43	Door Assy, Upper Fuselage - F.S. 270.00-313.50, RH	82-23355 thru 84-24311
7-311150122-51	Door Assy, Upper Fuselage - F.S. 270.00-313.50, RH	85-25351 thru 88-0199

Table E-1. Structural Interchangeability-Replaceability List - Cont

Part Number	Nomenclature	Tail Number Effectivity
7-311150122-53	Door Assy, Upper Fuselage - F.S. 270.00-313.50, LH	88-0200 thru subsequent
7-311150122-55	Door Assy, Upper Fuselage - F.S. 270.00-313.50, RH	88-0200 thru subsequent
7-311150123-55	Fairing Assy, LH - F.S. 270.00-313.50	82-23355 thru 88-0199
7-311150123-83	Fairing Assy, LH - F.S. 270.00-313.50	82-23355 thru subsequent
7-311150125-21	Panel Assy, RH - F.S. 313.50-340.00	82-23355 thru subsequent
7-311150125-31	Fairing Assy, Hydraulic Access, RH	82-23355 thru 83-23789
7-311150125-53	Fairing Assy, Hydraulic Access, RH	83-23790 thru 83-23801
7-311150125-59	Fairing Assy, Hydraulic Access, RH	83-23802 thru 88-0199
7-311150125-65	Fairing Assy, Hydraulic Access, RH	82-23355 thru subsequent
7-311150125-67	Door Assy	82-23355 thru subsequent
7-311150125-69	Panel Assy	82-23355 thru subsequent
7-311150125-51	Door Assy, RH - F.S. 313.50-340.00	82-23355 thru subsequent
7-311150125-49	Door Assy	82-23355 thru 88-0199
7-311150125-57	Door Assy	82-23355 thru subsequent
7-311150126-23	Door Assy, LH - F.S. 313.50-340.00	82-23355 thru 88-0199
7-311150126-601	Door Assy, LH - F.S. 313.50-340.00	82-23355 thru subsequent
7-311150130-27	Fairing Assy	82-23355 thru 83-23816
7-311150130-41	Fairing Assy	83-23817 thru subsequent
7-311150130-45	Fairing Assy	82-23355 thru subsequent
7-311150131-25	Fairing Assy	82-23355 thru 83-23817
7-311150131-41	Fairing Assy	83-23818 thru 88-0199
7-311150131-47	Fairing Assy	82-23355 thru subsequent
7-311150135-1	Cover Assy, IR Jammer	82-23355 thru subsequent
7-311150140-10	Fairing Assy, Ammo Feed System, Fwd RH	82-23355 thru 83-23819
7-311150140-12	Fairing Assy, Ammo Feed System, Fwd RH	82-23355 thru subsequent

Table E-1. Structural Interchangeability-Replaceability List - Cont

Part Number	Nomenclature	Tail Number Effectivity
7-311150140-126	Fairing Assy, Ammo Feed System, Fwd RH	83-23820 thru subsequent
7-311150140-11	Fairing Assy, Ammo Feed System, Fwd LH	82-23355 thru 84-24235
7-311150140-95	Fairing Assy, Ammo Feed System, Fwd LH	83-23787 thru 83-23819
7-311150140-127	Fairing Assy, Ammo Feed System, Fwd LH	83-23820 thru 88-0199
7-311150140-131	Fairing Assy, Ammo Feed System, Fwd LH	84-24236 thru subsequent
7-311150140-153	Fairing Assy, Ammo Feed System, Fwd LH	82-23355 thru subsequent
7-311150140-17	Door Assy, Ammo Feed System, Fwd LH	82-23355 thru 88-0199
7-311150140-149	Door Assy, Ammo Feed System, Fwd LH	88-0200 thru subsequent
7-311150140-18	Door Assy, Ammo Feed System, Fwd RH	82-23355 thru subsequent
7-311150140-21	Door Assy, Ammo Feed System, Fwd RH	82-23355 thru subsequent
7-311150140-27	Bonded Assy, Ammo Feed System	82-23355 thru 88-0199
7-311150140-121	Bonded Assy, Ammo Feed System	82-23355 thru subsequent
7-311150140-155	Bonded Assy, Ammo Feed System	82-23355 thru subsequent
7-311150140-29	Door, Ammo Access	82-23355 thru 88-0199
7-311150141-47	Frame Assy, Upper Fuselage Fairing	82-23355 thru 83-23821
7-311150141-61	Frame Assy, Upper Fuselage Fairing	83-23822 thru 88-0199
7-311150141-83	Frame Assy, Upper Fuselage Fairing	82-23355 thru subsequent
7-311150142-3	Fairing Assy, Main Rotor Shaft	82-23355 thru 84-24211
7-311150142-17	Fairing Assy, Main Rotor Shaft	84-24212 thru 85-25464
7-311150142-23	Fairing Assy, Main Rotor Shaft	85-25465 thru subsequent
7-311150145-47	Fairing Assy, Doghouse	82-23355 thru 84-24211
7-311150145-55	Fairing Assy, Doghouse	84-24212 thru 85-25464
7-311150145-57	Fairing Assy, Doghouse	85-25465 thru 90-0448
7-311150145-59	Fairing Assy, Doghouse	90-0449 thru subsequent
7-311150146-11	Door Assy, Upper LH - F.S. 230.50-270.00	82-23355 thru 83-23834
7-311150146-21	Door Assy, Upper RH - F.S. 230.50-270.00	82-23355 thru 83-23834

Table E-1. Structural Interchangeability-Replaceability List - Cont

Part Number	Nomenclature	Tail Number Effectivity
7-311150146-59	Door Assy, Upper RH - F.S. 230.50-270.00	84-24200 thru 84-24311
7-311150146-61	Door Assy, Upper LH - F.S. 230.50-270.00	84-24200 thru 87-0454
7-311150146-71	Door Assy, Upper RH - F.S. 230.50-270.00	85-25351 thru 87-0454
7-311150146-89	Door Assy, Upper LH - F.S. 230.50-270.00	82-23355 thru subsequent
7-311150146-91	Door Assy, Upper RH - F.S. 230.50-270.00	82-23355 thru subsequent
7-311150147-17	Fairing Assy, Tailboom (Cover Assy)	82-23355 thru 83-23788
7-311150147-19	Fairing Assy, Tailboom (Cover Assy)	82-23355 thru 83-23788
7-311150147-39	Fairing Assy, Tailboom (Cover Assy)	83-23789 thru 83-23805
7-311150147-43	Fairing Assy, Tailboom (Cover Assy)	83-23789 thru 83-23805
7-311150147-47	Fairing Assy, Tailboom (Cover Assy)	83-23806 thru subsequent
7-311150147-49	Fairing Assy, Tailboom (Cover Assy)	83-23806 thru subsequent
7-311150147-63	Fairing Assy, Tailboom (Cover Assy)	83-23806 thru subsequent
7-311150148-21	Fairing Assy, Doppler - F.S. 330.00	82-23355 thru 85-25386
7-311150148-37	Fairing Assy, Doppler - F.S. 330.00	85-25387 thru 86-8983
7-311150148-49	Fairing Assy, Doppler - F.S. 330.00	86-8984 thru subsequent
7-311150149-17	Fairing Assy, Antenna, ADF Sensor	82-23355 thru 83-23834
7-311150149-35	Fairing Assy, Antenna, ADF Sensor	84-24200 thru subsequent
7-311150150-3	Fairing Assy, FAB Extension, LH	82-23355 thru subsequent
7-311150150-4	Fairing Assy, FAB Extension, RH	82-23355 thru subsequent
7-311150152-5	Cover, Doghouse	82-23355 thru subsequent
7-211160040	Support Assy, Mixer	82-23355 thru 85-25488
7-211160040-5	Support Assy, Mixer	82-23355 thru 89-0263
7-211160040-7	Support Assy, Mixer	82-23355 thru subsequent
7-311160044	Bolt, Mixer Support	82-23355 thru 89-0263
7-311160044-3	Bolt, Mixer Support	82-23355 thru subsequent
7-311160010	Mast Base Assy	82-23355 thru 90-0341

Table E-1. Structural Interchangeability-Replaceability List - Cont

Part Number	Nomenclature	Tail Number Effectivity
7-311160010-3	Mast Base Assy	82-23355 thru subsequent
7-311160020	Mast, Rotor Support	82-23355 thru 89-0263
7-311160020-5	Mast, Rotor Support	82-23355 thru subsequent
7-311160055-1	Strut, Fwd, Center, LH	82-23355 thru subsequent
7-311160055-2	Strut, Fwd, Center, RH	82-23355 thru subsequent
7-311160060-1	Strut, Fwd, Side, LH	82-23355 thru subsequent
7-311160060-2	Strut, Fwd, Side, RH	82-23355 thru subsequent
7-311160070-1	Strut, Aft, Side, LH	82-23355 thru subsequent
7-311160070-2	Strut, Aft, Side, RH	82-23355 thru subsequent
7-311160085-1	Strut, Aft, Center, LH	82-23355 thru subsequent
7-311160085-2	Strut, Aft, Center, RH	82-23355 thru subsequent
7-311171021-9	Panel, Console, Fwd Cockpit, LH	82-23355 thru 83-23826
7-311171021-13	Panel, Console, Fwd Cockpit, LH	83-23827 thru subsequent
7-311171022-9	Panel, Console, Fwd Cockpit, Middle, LH	82-23355 thru subsequent
7-311171024	Panel, Console, Fwd Cockpit, Aft, Lower, LH	82-23355 thru 83-23788
7-311171024-9	Panel, Console, Fwd Cockpit, Aft, Lower, LH	82-23789 thru subsequent
7-311171031-7	Panel, Console, Fwd Cockpit, RH	82-23355 thru 83-23823
7-311171031-11	Panel, Console, Fwd Cockpit, RH	82-23355 thru subsequent
7-311171033	Panel, Console, Fwd Cockpit, Aft, Lower, RH	82-23355 thru 89-0263
7-311171033-601	Panel, Console, Fwd Cockpit, Aft, Lower, RH	90-0280 thru subsequent
7-311171141-45	Glareshield Assy, Fwd Cockpit, LH	82-23355 thru 82-23361
7-311171141-47	Glareshield Assy, Fwd Cockpit, RH	82-23355 thru 82-23361
7-311171141-49	Glareshield Assy, Fwd Cockpit, LH	82-23362 thru 83-23788
7-311171141-51	Glareshield Assy, Fwd Cockpit, RH	82-23362 thru 83-23788
7-311171141-55	Glareshield Assy, Fwd Cockpit, RH	83-23789 thru 83-23798
7-311171141-57	Glareshield Assy, Fwd Cockpit, RH	83-23799 thru 83-23829

Table E-1. Structural Interchangeability-Replaceability List - Cont

Part Number	Nomenclature	Tail Number Effectivity
7-311171141-59	Glareshield Assy, Fwd Cockpit, LH	83-23799 thru 83-23829
7-311171141-79	Glareshield Assy, Fwd Cockpit, RH	84-24200 thru 84-24288
7-311171141-81	Glareshield Assy, Fwd Cockpit, LH	84-24200 thru 84-24219
7-311171141-87	Glareshield Assy, Fwd Cockpit, LH	82-23355 thru subsequent
7-311171141-97	Glareshield Assy, Fwd Cockpit, RH	82-23355 thru subsequent
7-311171147-37	Extension, Glareshield Assy, Fwd, LH	82-23362 thru 83-23834
7-311171147-39	Extension, Glareshield Assy, Fwd, RH	82-23362 thru 83-23834
7-311171147-43	Extension, Glareshield Assy, Fwd, LH	82-23355 thru subsequent
7-311171147-45	Extension, Glareshield Assy, Fwd, RH	82-23355 thru subsequent
7-311172021-5	Panel, Console, Aft Cockpit, Fwd, LH	82-23355 thru 83-23810
7-311172021-21	Panel, Console, Aft Cockpit, Fwd, LH	83-23811 thru subsequent
7-311172021-25	Panel, Console, Aft Cockpit, Fwd, LH	82-23355 thru subsequent
7-311172022-13	Panel, Console, Aft Cockpit, Middle, LH	82-23355 thru 83-23792
7-311172022-23	Panel, Console, Aft Cockpit, Middle, LH	83-23793 thru 83-23826
7-311172022-29	Panel, Console, Aft Cockpit, Middle, LH	83-23827 thru subsequent
7-311172023	Panel, Console, Aft Cockpit, Aft, LH	82-23355 thru subsequent
7-311172032	Panel, Console, Aft Cockpit, Fwd, RH	82-23355 thru 83-23810
7-311172032-9	Panel, Console, Aft Cockpit, Fwd, RH	82-23355 thru subsequent
7-311172035	Panel, Console, Aft Cockpit, Lower, Aft, RH	82-23355 thru subsequent
7-311172141-17	Glareshield Assy, Fixed, Aft Cockpit	82-23362 thru 83-23834
7-311172141-49	Glareshield Assy, Fixed, Aft Cockpit	82-23355 thru 85-25389
7-311172141-55	Glareshield Assy, Fixed, Aft Cockpit	82-23355 thru subsequent
7-311172143-23	Extension Assy, Glareshield, Aft, LH	82-23362 thru 83-23834
7-311172143-25	Extension Assy, Glareshield, Aft, RH	82-23362 thru 83-23834
7-311172143-33	Extension Assy, Glareshield, Aft, LH	82-23355 thru subsequent
7-311172143-35	Extension Assy, Glareshield, Aft, RH	82-23355 thru subsequent

Table E-1. Structural Interchangeability-Replaceability List - Cont

Part Number	Nomenclature	Tail Number Effectivity
7-311172151	Panel, Vertical Glareshield, Pilot, LH	82-23355 thru subsequent
7-311172152	Panel, Vertical Glareshield, Pilot, RH	82-23355 thru 88-0227
7-311172152-601	Panel, Vertical Glareshield, Pilot, RH	82-23355 thru subsequent
7-211180025	Adapter, Bore Sight Mount, Aft	82-23355 thru subsequent
7-211180026	Mount, Bore Sight Mount, Aft	82-23355 thru subsequent
7-211180089	Holster Assy - HMD, IHADSS	82-23355 thru 89-0263
7-211180089-601	Holster Assy - HMD, IHADSS	90-0280 thru subsequent
7-311180010-3	Scuff Plate Assy, Pilot	82-23355 thru 83-23825
7-311180010-19	Scuff Plate Assy, Pilot	82-23355 thru subsequent
7-311180010-5	Scuff Plate Assy, Pilot	82-23355 thru 83-23825
7-311180010-21	Scuff Plate Assy, Pilot	82-23355 thru subsequent
7-311180012-3	Scuff Plate Assy, Copilot	82-23355 thru 83-23795
7-311180012-27	Scuff Plate Assy, Copilot	82-23355 thru subsequent
7-311180012-5	Scuff Plate Assy, Copilot	82-23355 thru 83-23795
7-311180012-29	Scuff Plate Assy, Copilot	82-23355 thru subsequent
7-311180024	Support, Bore Sight Mount, Aft	82-23355 thru subsequent
7-311180061	Support, CPG, SSU	82-23355 thru subsequent
7-311180080-15	Fairing Assy, SSU Mount	82-23355 thru 82-23365
7-311180080-21	Fairing Assy, SSU Mount	83-23787 thru 83-23792
7-311180080-23	Fairing Assy, SSU Mount	83-23793 thru subsequent

SECTION III. O-RINGS, PACKINGS, AND GASKETS

E-3. GENERAL.

This section lists and cross-references o-rings, packings, and gaskets in the military part number series to alternates or part number specification substitutes. Table E-2 is a reference and temperature guide for primary and alternate part numbers with corresponding Military Specifications or Aerospace Material Specifications (AMS).

Table E-2. Packing Reference and Temperature Guide

Primary Part No. Series and Specification	Alternate Part No. and/or Specifications	Temperature Range	Service and Specifications
AN6227, AN6230 (MIL-P-5516, Class B)	MS28775 (MIL-P-25732)	-65° F to 275° F (-55° C to 135° C)	Hydraulic Fluids, MIL-H-5606 and MIL-H-83282
M83248/1 (MIL-R-83248/1A, MIL-G-5514)	M83248/2 (MIL-R-83248/2) (AMS7276)	-20° F to 400° F (-29° C to 225° C)	Hydraulic Fluids, MIL-H-5606 and MIL-H-83282
M83248/2 (MIL-R-83248/2, MIL-G-5514)	M83248/1 (MIL-R-83248/1A) (AMS7276)	-20° F to 400° F (-29° C to 225° C)	Hydraulic Fluids, MIL-H-5606 and MIL-H-83282
MS27194, Gasket (MIL-P-5315, MIL-A-8625)	AMS3327C	-65° F to 160° F (-55° C to 71° C)	Jet Fuels, JP4 and JP5
MS28774 (MIL-R-8791/1)	MS27595 (MIL-G-5514)	-20° F to 300° F (-29° C to 149° C)	Lubricants, MIL-L-23699
MS28775 (MIL-P-25732)	M83248/1 (MIL-R-83248/1A, MIL-G-5514)	-65° F to 2750 F (-55° C to 135° C)	Hydraulic Fluids, MIL-H-5606 and MIL-H-83282
MS28778 (MIL-P-5510)	M83248/1 (MIL-R-83248/1A, MIL-G-5514)	-65° F to 275° F (-55° C to 135° C)	Hydraulic Fluids, MIL-H-5606 and MIL-H-83282
MS29512, MS29513 (MIL-P-5315)	AMS7270	-65° F to 200° F (-55° C to 93° C)	Jet Fuels, JP4 and JP5
MS29561 (MIL-R-7362, Type 1)	NAS617 (MIL-R-7362)	-65° F to 275° F (-55° C to 135° C)	Synthetic Lubricants, MIL-L-7808
MS9020, MS9021 (AMS7271-80)	AN1239, AN1240 (AMS7270J)	-400 F to 2250 F (-40° C to 107° C)	Petroleum Base Fuel and Low Temperature Resistance
MS9068 (AMS3304)	AMS3303	-85° F to 401° F (-65° C to 2050 C)	Air and Gases. Static Seal

Table E-2. Packing Reference and Temperature Guide - Cont

Primary Part No. Series and Specification	Alternate Part No. and/or Specifications	Temperature Range	Service and Specifications
MS9134-01, Gasket	AMS3232L	-20° F to 300° F (-29° C to 1490 C)	Lubricants, MIL-L-7808 and MIL-L-23699
MS9385 (AMS7267G)	AMS7266	-85° F to 5000 F (-65° C to 265° C)	Fuel and High Temperature Lubricating Oils
NAS1523A (MIL-R-25988, Type 1, Class 1)	None Identified	-65° F to 212° F (-55° C to 100° C)	Fuel Vent System
NAS1523C (MIL-R-6855, Class 1, and MIL-S-5059)	None Identified	-65° F to 2750 F (-55° C to 135° C)	High Temperature Screw Installations
NAS1593 (MIL-R-25897)	M83248/1 (MIL-R-83248/1A)	-200 F to 500° F (-29° C to 260° C)	Lubricants, MIL-L-7808 and MIL-L-23699

SECTION IV. PETROLATUM, OIL, AND LUBRICANT (POL)

E-4. GENERAL.

This section lists various types of substitute fuels, fluids, lubricants, and hydraulic fluids which can be used on the AH-64A helicopter. It is advisable to properly identify the product by specification number and name for cross-referencing the primary and alternate/ expedient products available. The identification of NATO product numbers relates directly to U.S. Military Specification Numbers and thus are considered direct replacements.

Table E-3 lists possible U.S. fuels, in proper priority, that may be used as a substitute for the primary fuel. Table E-4 lists primary or standard fuel sources and alternate fuel sources for various foreign countries. Table E-5 lists commercial fuel sources that may be substituted for the primary JP-4 fuel. When using substitute fuels, other than JP-5 or JP-8, it is preferable to premix the fuels in a container before pouring into tank. The best expedient fueling method is to add both fuels at the same time from two separate lines. Table E-6 lists alternate and expedient fuel blends. Table E-7 lists primary, alternative, and expedient sources for lubricants and hydraulic fluids which are used in the helicopter.

Table E-3. Substitute U.S. Fuels

Primary Fuel	Alternate Fuel	Expedient Fuel	Military Specifications	Commercial Specifications
Aviation Turbine: JP4 (NATO-F-40)			MIL-T-5624	
Aviation Turbine: JP5 (NATO-F-44)			MIL-T-5624	
Aviation Turbine: JP8 (NATO-F-34)			MIL-T-83133A	
	Aviation Turbine: Jet B			ASTM-D-1655
	Aviation Turbine: Jet A			ASTM-D-1655
	Aviation Turbine: Jet A-1			ASTM-D-1655
	Aviation Turbine: (Special) JP7		MIL-T-38219	
		Diesel Fuel: DF-A, DF-1, DF-2		VV-F-800
		LATA: Wide Cut and Kerosene Grades		ADD 76-1

NOTE

- Outside temperature of 20° F (-7° C) and above required when using DF-2.
- Outside temperature of -20° F (-29° C) and above required when using DF-1 or DF-A.
- Outside temperature of -29° F (-34° C) and above required when using Jet A.

Table E-4. Substitute Foreign Fuels

Source	Primary or Standard Fuel	Alternate Fuels	
U.S. Military Fuel NATO Code Number	JP-4 (MIL-T-5624) F-40	JP-5 (MIL-T-5624) F-44	JP-8 (MIL-T-83133) F-34
Belgium	BA-PF-2B AMD.2 a/AF	BA-PF-6 n/AF	BA-PF-7 (AF)
Canada	3-GP-22F n/AF	3-GP-24h n/(AF)	N/A
Denmark	MIL-T-5624 Grade JP-4 a/AF	N/A	D.ENG.RD.2453 Iss.3Amd.2 n/a/(AF)
France	AIR 3407/B AF	N/A	AIR 3405/C n/a/AF
Germany (West)	TL 9130-006 Iss.4 n/a/AF	TL 9130-007 Iss.4 n/(AF)	N/A
Greece	MIL-T-5624 Grade JP-4 a/AF	N/A	N/A
Italy	AA-M-C.142p n/a/AF	AA-M-C.143b n/(AF)	AA-M-C.141d Amd.1 (AF)
Netherlands	MIL-T-5624 Grade JP-4 a/AF	D.ENG.RD.2498 Iss.6Amd.2 n/AF	D.ENG.RD.2453 Iss.3Amd.2 a/AF
Norway	MIL-T-5624 Grade JP-4 a/AF	N/A	N/A
Portugal	MIL-T-5624 Grade JP-4 a/AF	N/A	AIR 3405/C AF
Turkey	MIL-T-5624 Grade JP-4 a/AF	N/A	N/A
United Kingdom	D.ENG.RD.2454 Iss.3Amd.2 n/a/AF	D.ENG.RD.2498 Iss.6Amd.2 n/a/(AF)	D.ENG.RD.2453 Iss.3Amd.2 a/AF
Russia	GOST 1842-52 GOST 10227-62 T-1, TS-1	N/A	GOST 9145-59

Table E-5. Substitute Commercial Fuels

Source	Primary or Standard Fuel	Alternate Fuels	
U.S. Military NATO Code No.	JP-4 (MIL-T-5624) F-40 (Wide Cut Type)	JP-5 (MIL-T-5624) F-44 (High Flash Type)	JP-8 (MIL-T-83133) F-34 (High Flash Type)
COMMERCIAL FUEL (ASTM-D-1655)	JET B	JET A	JET A-1
American Oil Co.	American JP-4	American Type A	N/A
ARCO	Arcojet B	Arcojet A/Richfield A	Arcojet A-1/Richfield A-1
B.P. Trading	B.P.A.T.G.	N/A	B.P.A.T.K.
Caltex Petroleum Corp.	Caltex Jet B	N/A	Caltex Jet A-1
Chevron	Chevron B	Chevron A-50	Chevron A-1
City Service Co.	N/A	CITCO A	N/A
Continental Oil Co.	Conoco JP-4	Conoco Jet-50	Conoco Jet-60
EXXON Co. (USA)	EXXON Turbo Fuel B	EXXON A	EXXON A-1
Gulf Oil	Gulf Jet B	Gulf Jet A	Gulf Jet A-1
Mobil Oil	Mobil Jet B	Mobil Jet A	Mobil Jet A-1
Phillips Petroleum	Philjet JP-4	Philjet A-50	N/A
Shell Oil Co.	Aeroshell JP-4	Aeroshell 640	Aeroshell 650
Sinclair	N/A	Superjet A	Superjet A-1
Standard Oil Co.	N/A	Jet A Kerosene	Jet A-1 Kerosene
Texaco	Texaco Avjet B	Avjet A	Avjet A-1
Union Oil	Union JP-4	76 Turbine Fuel	N/A

Table E-6. Alternate and Expedient Fuel Blends

Base Fuel	Extender (50% maximum)
CAUTION The helicopter shall not be flown when emergency fuel has been used for a total cumulative time of 50 hours. **NOTE** Fuel may be extended on an alternate basis with the following blends up to a half and half mixture:	
Any Primary Fuel	Any Alternate Fuel
Any Primary Fuel or Alternate Fuel	Fuels Conforming to MIL-G-3056 Gasoline
Any Primary Fuel or Alternate Fuel	Any Commercial Winter Grade Leaded Gas (high volatility) (ASTM-D-439)
Any Primary Fuel or Alternate Fuel	Diesel Fuel (marine) MIL-F-16884
NOTE • When using commercial grade gasolines it is recommended that the aircraft boost pumps be on at all times. Current vapor venting procedures should be followed when at high ambient temperatures and/or high altitudes. • Engine starting, performance, and fuel control on expedient/emergency fuels or fuel blends will vary from the primary fuel blends.	

Table E-7. Substitute Lubricants and Hydraulic Fluids

AH-64A	Primary Source		Alternative Source		Expedient Source	
Lubrication Point	Military Specification	NATO Code	U.S. or Nato Equivalent	Soviet Equivalent	U.S. or Nato Equivalent	Notes
Engine oil, APU, Main Trans-mission, Engine NGB, Engine Air Turbine Starter, ENCU	MIL-L-23699(for use in outside temperatures of -25° F/-32° C and above) MIL-L-7808 (for use in outside temperatures below -25° F/-32° C)	0-156 0-148	MIL-L-27502	GOST-13076-6767 GR: VNIINP-50-1-4 F NRTV-38-1-164-65 GR: TSNIL-36/IK (for use in outside temperature s below -25° F/-32° C)	MIL-L-46167(0-183)	MIL-L-46167 lacks high thermal stability. Degrades gradually and much sooner than MIL-L-23699 or MIL-L-7808
Primary Hydraulic System and Utility Hydraulic System	MIL-H-83282 (for use in outside temperatures-40° F/-40° C and above) MIL-H-5606 (for use in outside temperatures below -40° F/-40° C)	H-537 H-515	MIL-H-6083(C-635) (for use in outside temperatures of-40° F/-40° C and above) MIL-H-46170 for use in outside temperatures below -40° F/-40° C)	GOST-15819-70 RMTS	MIL-L-46167 (0-183)	N/A
MLG Shock Struts, Brake System	MIL-H-5606	H-515	MIL-H-46170	N/A	N/A	N/A
Intermediate Gearbox, Tail Rotor Gearbox	HMS 20-1155 NS 4405 FG	N/A	N/A	N/A	N/A	N/A

NOTE

- Do not mix lubricating oils MIL-L-23699 and MIL-L-7808.
- Do not mix hydraulic fluids MIL-H-83282 and MIL-H-5606.

SECTION V. STRUCTURAL METAL ALLOYS

E-5. GENERAL.

Due to the short term of their use, weight and dissimilar metal corrosion considerations can be overlooked during BDR structural repairs. Metal selections should be based only on strength requirements. Refer to Table E-8 using the following steps to locate the proper alloy substitute:

1. Locate the material to be replaced on the line in the left hand column.
2. Locate the substitute material in the vertical columns.
3. To obtain the minimum thickness of the substitute material, multiply the thickness of the material to be replaced by the factor shown where the columns intersect (found in steps 1 & 2). Substitute standard gage equal to this thickness or nearest gage.

Table E-8. Metal Substitution Chart

Material to be Replaced	Ultimate Tensile Strength PSI	2024			1025	7075 T6		4130 8630 Steel		Titanium				Stainless Steel		
		T3 & T4 Clad	T4 Ext	T6 Bare	Steel	Clad	Ext	90 KSI	125 KSI	99%	8 Mn	6AL -4V	6A1 6V 2Sn	¼ 301	½ 302	321 347
6061-T6 Extruded	38,000	1.0	1.0	1.0	1.0	1.0	1.0	1.0	1.0	1.0	1.0	1.0	1.0	1.0	1.0	1.0
AZ31A-H Magnesium	39,000	1.0	1.0	1.0	1.0	1.0	1.0	1.0	1.0	1.0	1.0	1.0	1.0	1.0	1.0	1.0
6061-T6 Clad	42,000	1.0	1.0	1.0	1.0	1.0	1.0	1.0	1.0	1.0	1.0	1.0	1.0	1.0	1.0	1.0
2024-T4 Extruded	57,000	1.0	1.0	1.0	1.04	1.0	1.0	1.0	1.0	1.0	1.0	1.0	1.0	1.0	1.0	1.0
2024-T4 Clad	58,000	1.0	1.02	1.0	1.05	1.0	1.0	1.0	1.0	1.0	1.0	1.0	1.0	1.0	1.0	1.0
2024-T3 Clad	60,000	1.04	1.05	1.0	1.09	1.0	1.0	1.0	1.0	1.0	1.0	1.0	1.0	1.0	1.0	1.0
2024-T6 Bare	62,000	1.07	1.09	1.0	1.13	1.0	1.0	1.0	1.0	1.0	1.0	1.0	1.0	1.0	1.0	1.0
2024-T81 Clad	64,000	1.1	1.12	1.0	1.16	1.0	1.0	1.0	1.0	1.0	1.0	1.0	1.0	1.0	1.0	1.0
2024-T88 Clad	70,000	1.21	1.23	1.03	1.25	1.0	1.0	1.0	1.0	1.0	1.0	1.0	1.0	1.0	1.0	1.0
7075-T6 Clad	72,000	1.24	1.27	1.13	1.31	1.0	1.0	1.0	1.0	1.0	1.0	1.0	1.0	1.0	1.0	1.0
7075-T6 Bare	78,000	1.35	1.37	1.16	1.42	1.09	1.0	1.0	1.0	1.0	1.0	1.0	1.0	1.0	1.0	1.0
7075-T6 Extruded	78,000	1.35	1.37	1.26	1.42	1.09	1.0	1.0	1.0	1.0	1.0	1.0	1.0	1.0	1.0	1.0
7178-T6 Bare	84,000	1.45	1.48	1.36	1.53	1.17	1.08	1.0	1.0	1.0	1.0	1.0	1.0	1.0	1.0	1.0
7178-T6 Extruded	84,000	1.45	1.48	1.36	1.53	1.17	1.08	1.0	1.0	1.0	1.0	1.0	1.0	1.0	1.0	1.0
Titanium 99Z	80,000	1.38	1.40	1.29	1.45	1.11	1.02	1.0	1.0	1.0	1.0	1.0	1.0	1.0	1.0	1.0
Type 321 & 347 Cres	100,000	1.72	1.75	1.61	1.82	1.38	1.28	1.11	1.0	1.25	1.0	1.0	1.0	1.0	1.0	1.0
Titanium 8 Mn	120,000	2.06	2.1	1.93	2.18	1.66	1.53	1.33	1.0	1.50	1.0	1.0	1.0	1.0	1.0	1.20
Type 301 Stainless	125,000	2.15	2.19	2.09	2.27	1.73	1.60	1.38	1.0	1.56	1.04	1.0	1.0	1.0	1.0	1.25

Table E-8. Metal Substitution Chart

Material to be Replaced	Ultimate Tensile Strength PSI	2024			1025	7075 T6		4130 8630 Steel		Titanium				Stainless Steel		
		T3 & T4 Clad	T4 Ext	T6 Bare	Steel	Clad	Ext	90 KSI	125 KSI	99%	8 Mn	6AL -4V	6A1 6V 2Sn	¼ 301	½ 302	321 347
Titanium 6AL-4V	134,000	2.31	2.35	2.16	2.43	1.86	1.71	1.48	1.07	1.67	1.12	1.0	1.0	1.07	1.0	1.34
Titanium 4AL-4Mn	140,000	2.41	2.45	2.25	2.55	1.94	1.79	1 55	1.12	1.75	1.16	1.04	1.0	1.12	1.0	1.40
Type 301 Stainless	150,000	2.58	2.63	2.42	2.73	2.08	1.92	1.66	1.20	1.88	1.25	1.11	1.0	1.2	1.0	1.50
Titanium 6A1-6V-2Sn	155,000	2.67	2.71	2.5	2.81	2.15	1.98	1.72	1.24	1.93	1.29	1.15	1.0	1.24	1.03	1.55

SECTION VI. STRUCTURAL FASTENERS

E-6. GENERAL.

This section lists a variety of fasteners and the suggested alternates commonly found on the AH-64A structure. The fasteners shown in Table E-9 are listed in order of increasing strength. Select a fastener of equal or greater strength and of similar material. Monel rivets of the same diameter and head style may be substituted for solid aluminum rivets. Enlarging holes must be kept to a minimum. Consideration must also be given to edge distance requirements. The minimum edge distance requirement for the structure is 1.5 times the finished hole diameter.

Table E-9. Substitute Structural Fastener Chart

	Primary Fasteners	Alt #1	Alt #2	Alt #3	Alt #4	Alt #5
GROUP I	MS20426 series (solid, counter-sink head rivet)	NAS1399	M7885/3	NAS1721	NAS1739	M7885/7
	MS20470 series (solid, protruding head rivet)	NAS1398	M7885/2	NAS1720	NAS1738	M7885/6
	NAS1242 series (solid, protruding head, oversize diameter rivet)	NAS1738	M7885/6	NAS1720V ( )L( )AX		
GROUP II	MS90354 (Huck bolt)	NAS1424	HS4410	NAS1669		
	NAS1424 (Lockbolt)	HS4410	NAS1669			
	HS4410 (Hi-Lok)	NAS1424	NAS1669			
	NAS1669 (Visu-lok)	HS4410				

NOTE

- Group II fasteners can be used in place of Group I fasteners however, Group I fasteners cannot be used to replace Group II fasteners.
- Avoid using NAS1398, NAS1399, and NAS1720 series fasteners where sheet metal, on the tail side, is 0.032 inch thick or less.
- NAS1738, M7885, and MS90354 fasteners are not considered hole filling fasteners. Do not use as replacements for hole filling fasteners.
- An HS4410 (Hi-Lok) collar can be replaced with an MS21042 nut and AN960 washer when the collar cannot be installed. Torque to 10-15 inch-pounds greater than the nut drag.

APPENDIX F
MISSION CAPABILITIES

BDAR TM PROCEDURES. THE EXPEDIENT REPAIR PROCEDURES IN BDAR TM ARE FOR USE IN COMBAT ONLY. STANDARD MAINTENANCE/REPAIR PROCEDURES ARE TO BE USED AS SOON THEREAFTER AS POSSIBLE.

F-1. GENERAL.

Table F-1 provides information on mission restrictions and capabilities when a particular subsystem, equipment or part is missing, damaged, or destroyed. Tables F-2 through F-5 provide mission capabilities with essential equipment damaged, destroyed, or failed.

Table F-1. Mission Capabilities Chart

Subsystems, Equipment, or Parts Missing, Damaged, or Destroyed	Missions that can be Accomplished with Modified or Restricted Flight Conditions
COCKPIT WINDOWS DAMAGED OR DESTROYED	The AH-64A can be flown with some or all of the windows damaged or missing. **CAUTION** Determine the flight envelope (there must be a restriction on flight conditions, air-speeds and maneuvers which can be used). **NOTE** Inspect support structure for integrity.
MAIN LANDING GEAR OR TAIL LANDING GEAR TIRES DAMAGED OR FLAT.	The AH-64A may continue flight operations as long as both MLG tires are kept equal. Defer for 100 flight hours. **CAUTION** Landings on unimproved areas should be accomplished using caution not to contact gun and antennas. **NOTE** Remain alert for possible ground reso-nance.

Table F-1. Mission Capabilities Chart - Cont

Subsystems, Equipment, or Parts Missing, Damaged, or Destroyed	Missions that can be Accomplished with Modified or Restricted Flight Conditions
WING DAMAGED OR DESTROYED	The AH-64A can operate with the loss of one or both wings and is deferrable for 100 flight hours.
PYLONS (1, 2, 3, or 4) DAMAGED or DESTROYED	The AH-64A can use the pylons that are operational to mount Hellfire missile racks and missiles, rocket pods, and external fuel tanks. **CAUTION** If mounting an external fuel tank, the plumbing kits must be the two tank configuration which uses the inboard two pylons. The four tank plumbing kits requires the complete system to be fully functional with no leaks or broken lines at any point in the system. **NOTE** There is no weight or CG restrictions applicable with one or more pylons missing.
PYLONS UNABLE TO ARTICULATE	The pylons can be locked in either the flight stow (+4°) or ground stow (-50) positions upon electrical or hydraulic failure. This will safe the system and allow firing by using the aircraft to point the weapons.

Table F-1. Mission Capabilities Chart - Cont

Subsystems, Equipment, or Parts Missing, Damaged, or Destroyed	Missions that can be Accomplished with Modified or Restricted Flight Conditions
SECTION OF STABILATOR DAMAGED OR MISSING	Continued operations could be accomplished provided the portion of the stabilator that is attached has no damage to the attachment hardware or attachment points. If the stabilator is severely damaged, the stabilator may be removed and flights may continue at reduced airspeeds. **CAUTION** Determine the flight envelope (there must be a restriction on flight conditions, air-speeds and maneuvers which can be used). **NOTE** • A pre-flight inspection must be per-formed on the operation and attach-ment points for the damaged stabilator. Controllability checks and a hover test must be conducted prior to mission re-lease. • If necessary, trim and/or tape stabilator to provide smoothest possible airfoil to reduce vibration. If vibration is exces-sive, remove stabilator.
FIRE CONTROL COMPUTER FAILURE	The weapon subsystem can be operated through the Back-up Bus Controller (BBC). Loss of FCC results in loss of ballistic calculations and therefore gun accuracy. However the gun can be fired and crude ranging can be accomplished by firing a short burst and altering the point of aim to adjust the bullet impact. Proper rocket elevation correction calculations are not possible with FCC failure and delivery accuracy will be poor. **WARNING** Many of the performance and safety inhib-its for the weapons subsystems will no longer be in place.

Table F-1. Mission Capabilities Chart - Cont

Subsystems, Equipment, or Parts Missing, Damaged, or Destroyed	Missions that can be Accomplished with Modified or Restricted Flight Conditions
BBC FAILURE	Failure of the BBC will result in severely degraded mission performance due to interleaving of mission equipment between MRTUs. This MRTU provides control, data, and status for the TADS, weapons action, CPG weapons trigger, gun, rocket and missile moding, boresight controls, TADS/PNVS FLIR gain and level, caution and warning enunciation, DEK, and video recorder control.
LEFT FAB MRTU FAILURE	Failure of this MRTU will result in total weapons malfunction. This MRTU provides control, data, and status for the TADS (including Laser/Range Finder/Designator control), Hellfire missile control, gun rounds counter functions, ARCS panel, pilot anti-ice, lighting, symbology control for IHADSS, and hover mode engagement.
RIGHT FAB MRTU FAILURE	Failure of this MRTU will result in severely degraded mission performance due to interleaving of mission equipment between MRTUs. This MRTU provides control, data, and status for the pilot and CPG IHADSS helmet line of fire, Turret Control Box, CPG fire control panel, ADF, radar altimeter readout, IHADSS DAP, external stores controller, PNVS gain and level.
PYLON MRTU FAILURE	If a pylon MRTU is rendered inoperative, the rockets associated with the pylon controlled by that MRTU can not be launched. All other pylons carrying rockets with a functional MRTU can still launch rockets.

Table F-1. Mission Capabilities Chart - Cont

Subsystems, Equipment, or Parts Missing, Damaged, or Destroyed	Missions that can be Accomplished with Modified or Restricted Flight Conditions
TADS OR LASER NOT OPERATIONAL	Operate as wing man in flight teams of no less than two aircraft (AH-64A or OH-58D). Other aircraft in team use their TADS to conduct acquisition. They will conduct the laser designation of the targets for the AH-64A and have the missiles launched in the Lock On After Launch (LOAL) mode. If the laser ranging is inoperative, AWS and rocket firing accuracy will be degraded. An estimated range can be entered for proper ballistic corrections. Additionally, the crew can fire ranging shots to determine manual holdover and fire for effect when proper correction has been found. Loss of TADS can be compensated by using the IHADSS as the sight and slaving the gun to the IHADSS. However, unless the PNVS is used, finding the target with the unaided eye will be difficult during night or poor visibility conditions, especially at longer ranges. At ranges greater than 1.5 kilometers, target identification will be difficult with the PNVS.
PILOT NIGHT VISION SUBSYSTEM INOPERATIVE	The AH-64A can be used as wingman in a team of no less than two aircraft. **CAUTION** The flight should be restricted to daylight VFR or night flight that can be conducted at an up and away attitude, only.
RADIOS (FM, UHF, or AM) NOT OPERATIONAL	Operate as wing man in flight teams of no less than two aircraft (AH-64A or OH-58D). The use of flash card signals and hand signals would be primary communication.

Table F-1. Mission Capabilities Chart - Cont

Subsystems, Equipment, or Parts Missing, Damaged, or Destroyed	Missions that can be Accomplished with Modified or Restricted Flight Conditions
ONE ENGINE NOT OPERATIONAL OR DAMAGED	The AH-64A single engine operations capabilities and limitations are detailed in TM 1-1520-238-10. The maximum torque (single engine) should be computed not to exceed the continuous torque limits from TM 1-1520-238-10. These torque values can then be used to calculate maximum allowable gross weight for take-off, cruise, and landing conditions. The minimum single engine speed is computed from the cruise chart. To illustrate, assume the pressure altitude is 300 ft., with a free air temperature of +30° C. Using a planning weight of 15,000 lbs., the maximum available continuous single engine torque is 106 percent. This allows a maximum allowable gross weight of 19,000 lbs. at an indicated airspeed of 24 knots or 36 knots of true airspeed. (A maximum mission gross weight of 17,500 is assumed to be the norm.) The AH-64A may be authorized for flight missions with restricted mission loads or no weapons loads. In this configuration, it could work in team as a laser designator.

Table F-1. Mission Capabilities Chart - Cont

Subsystems, Equipment, or Parts Missing, Damaged, or Destroyed	Missions that can be Accomplished with Modified or Restricted Flight Conditions
AFT FUEL CELL DAMAGED OR LEAKING	The AH-64A can be flown with the FWD fuel cell as the only operational fuel cell if damage to aft fuel cell occurs during flight. Operations may continue in combat emergency situation. Aircraft must be re-fueled with engines running. If engines are shut down, engine re-start will not be possible without boost pump operation. **WARNING** There must be a calculation for the mission time available (compute time and monitor fuel to establish burn time and deduct 20 minute fuel reserve). **CAUTION** Aft Fuel Cell damage means there is no boost pump operation available. If the external tanks are to be used they must be placed on the left side. Position the cross-feed switch in the forward cross-feed position. The internal fuel transfer system can not be used. **NOTE** Check the weight and balance.

Table F-2. Autonomous Weapons Engagement (Night Mission)

Mission	Equipment								
	RHE	MRTU Type II	FCC	BBC	PNVS	TADS	HARS	TCB	IHADSS
Navigation	--	--	4	5	1	2	*	--	9
Gun Ship	--	--	4	5	8	3	7	*	10
Rockets	--	6	4	5	8	--	*7	--	--
Missiles	*	--	4	5	8	*	*7	--	--

NOTE

* Loss of the item identified in the column header disables the function identified in the row header.

1) PNVS failure increases crew workload and decreases effectiveness of the weapons system. However, the mission may continue by using the TADS in back up PNVS mode but CPG can not simultaneously engage targets with TADS.

2) If PNVS has failed and TADS fails, there is no tertiary aided visual flight capability. Therefore mission completion will probably not be possible. Poor weather conditions might result in loss of crew and aircraft.

3) Loss of TADS impacts engagement range, depending on weather, battle field illumination, and target size/aspect. Gun can be directed using sight select IHADSS with degraded accuracy.

4) FCC failure enables the BBC as bus controller, but results in loss of FDLS, gun and rocket ballistics, and waypoint/targeting functions.

5) Loss of the BBC after the FCC has failed results in loss of all MUXbus related system functions.

6) Loss of pylon MRTU (type II) only disables rocket/missile functions for the pylon controlled by that MRTU. Rocket pods/missile launchers on other pylons are not affected.

7) Loss of HARS invalidates the ballistics calculations and prevents the gun from firing. Rocket elevation calculations are also invalidated with loss of HARS, however rocket fire is still possible with degraded accuracy. If the HARS failed during a negative-G maneuver, rocket and missile fire is inhibited.

8) Loss of PNVS at night causes the pilot to have to hold hover at a higher altitude than otherwise to ensure terrain and obstacle clearance while the CPG is engaging targets. High altitude hover makes the aircraft vulnerable to ground threat fire.

9) Loss of pilot IHADSS causes pilot workload to increase. Symbology can be obtained on pilot VDU. PNVS position off aircraft centerline will cause some disorientation when viewed through VDU.

10) Loss of CPG IHADSS reduces intuitive point-and-shoot capability. Gun may be slaved to TADS turret and directed with thumb controller. Also the gun can be fixed forward and aircraft steered to direct fire, if required

Table F-3. Autonomous Weapons Engagement (Day Mission)

Mission	Equipment								
	RHE	MRTU Type II	FCC	BBC	PNVS	TADS	HARS	TCB	IHADSS
Navigation	--	--	4	5	1	--	*	--	8
Gun Ship	--	--	4	5	--	3	7	*	9
Rockets	--	*6	4	5	--	--	*7	--	--
Missiles	*	--	4	5	--	*2	*7	--	--

NOTE

* Loss of the item identified in the column header disables the function identified in the row header.

1) PNVS failure should have minimal impact on effectiveness of the weapons system. The mission may continue by using the TADS in back up PNVS mode during periods of poor visibility but CPG can not simultaneously engage targets with TADS while in back-up PNVS mode.

2) If TADS fails, there is no back-up method available for autonomous designation.

3) Loss of TADS impacts engagement range, depending on weather, cloud or smoke density and target size/aspect. Gun can be directed using sight select IHADSS with degraded accuracy.

4) FCC failure results in loss of FDLS, gun and rocket ballistics, and waypoint/targeting functions.

5) Loss of the BBC after the FCC has failed results in loss of all MUX bus related system functions.

6) Loss of pylon MRTU (type II) only disables rocket/missile functions for the pylon controlled by that MRTU. Rocket pods/missile launchers on other pylons are not affected.

7) Loss of HARS invalidates the ballistics calculations and prevents the gun from firing. Rocket elevation calculations are also invalidated with loss of HARS, however rocket fire is still possible with degraded accuracy. If the HARS failed during a negative-G maneuver, rocket and missile fire is inhibited.

8) Loss of pilot IHADSS causes pilot workload to increase. Symbology can be obtained on pilot VDU. PNVS position off aircraft centerline will cause some disorientation when viewed through VDU.

9) Loss of CPG IHADSS reduces intuitive point-and-shoot capability. Gun may be slaved to TADS turret and directed with thumb controller.

Table F-4. Remote Weapons Engagement (Night Mission)

Mission	Equipment								
	RHE	MRTU Type II	FCC	BBC	PNVS	TADS	HARS	TCB	IHADSS
Navigation	--	--	4	5	1	2	*	--	9
Gun Ship	--	--	4	5	8	3	7	*	10
Rockets	--	6	4	5	8	--	*7	--	--
Missiles	*	--	4	5	8	*	*7	--	--

NOTE

* Loss of the item identified in the column header disables the function identified in the row header.

1) PNVS failure increases crew workload and decreases effectiveness of the weapons system. However, he mission may continue by using the TADS in back up PNVS mode but CPG can not simultaneously engage targets with TADS.

2) If PNVS has failed and TADS fails, there is no tertiary aided visual flight capability. Therefore mission completion will probably not be possible. Poor weather conditions might result in loss of crew and aircraft.

3) Loss of TADS impacts engagement range,depending on weather, battle field illumination, and target size/aspect. Gun can be directed using sight select IHADSS with degraded accuracy.

4) FCC failure enables the BBC as bus controller, but results in loss of FDLS, gun and rocket ballistics, and waypoint/targeting functions.

5) Loss of the BBC after the FCC has failed results in loss of all MUX bus related system functions.

6) Loss of pylon MRTU (type II) only disables rocket/missile functions for the pylon controlled by that MRTU. Rocket pods/missile launchers on other pylons are not affected.

7) Loss of HARS invalidates the ballistics calculations and prevents the gun from firing. Rocket elevation calculations are also invalidated with loss of HARS, however rocket fire is still possible with degraded accuracy. If the HARS failed during a negative-G maneuver, rocket and missile fire is inhibited.

8) Loss of PNVS at night causes the pilot to have to hold hover at a higher altitude than otherwise to ensure terrain and obstacle clearance while the CPG is engaging targets. High altitude hover makes the aircraft vulnerable to ground threat fire.

9) Loss of pilot IHADSS causes pilot workload to increase. Symbology can be obtained on pilot VDU. PNVS position off aircraft centerline will cause some disorientation when viewed through VDU.

10) Loss of CPG IHADSS reduces intuitive point-and-shoot capability. Gun may be slaved to TADS turret and directed with thumb controller. Also the gun can be fixed forward and aircraft steered to direct fire, if required.

Table F-5. Remote Weapons Engagement (Day Mission)

Mission	Equipment								
	RHE	MRTU Type II	FCC	BBC	PNVS	TADS	HARS	TCB	IHADSS
Navigation	--	--	4	5	1		*	--	8
Gun Ship	--	--	4	5	--	3	7	*	9
Rockets	--	*6	4	5	--	--	*7	--	--
Missiles	*	--	4	5	--	2	*7	--	--

NOTE

* Loss of the item identified in the column header disables the function identified in the row header.

1) PNVS failure should have minimal impact on effectiveness of the weapons system. The mission may continue by using the TADS in back up PNVS mode during periods of poor visibility but CPG can not simultaneously engage targets with TADS while in back-up PNVS mode.

2) If TADS fails, remote designation by either ground or air assets can continue prosecution.

3) Loss of TADS impacts engagement range, depending on weather, cloud or smoke density and target size/aspect. Gun can be directed using sight select IHADSS with degraded accuracy.

4) FCC failure results in loss of FDLS, gun and rocket ballistics, and waypoint/targeting functions.

5) Loss of the BBC after the FCC has failed results in loss of all MUX bus related system functions.

6) Loss of pylon MRTU (type II) only disables rocket/missile functions for the pylon controlled by that MRTU. Rocket pods/missile launchers on other pylons are not affected.

7) Loss of HARS invalidates the ballistics calculations and prevents the gun from firing. Rocket elevation calculations are also invalidated with loss of HARS, however rocket fire is still possible with degraded accuracy. If the HARS failed during a negative-G maneuver, rocket and missile fire is inhibited.

8) Loss of pilot IHADSS causes pilot workload to increase. Symbology can be obtained on pilot VDU. PNVS position off aircraft centerline will cause some disorientation when viewed through VDU.

9) Loss of CPG IHADSS reduces intuitive point-and-shoot capability. Gun may be slaved to TADS turret and directed with thumb controller.

GLOSSARY

SECTION I. ACRONYMS AND ABBREVIATIONS

This Appendix contains acronyms, abbreviations, and definition of unusual terms used in the task of battle-damage assessment and repair.

AC ..... Alternating Current

Acft ..... Aircraft

ACM ..... Automatic Control Module

ACM/BDR ..... Aircraft Combat Maintenance/Battle Damage Repair

ADF ..... Automatic Direction Finder

ADP ..... Air Data Processor

ADS ..... Air Data System

AE ..... Aft Equipment Bay

AGPU ..... Aviation Ground Power Unit

Al Aly ..... Aluminum Alloy

ALCD ..... Alclad (Aluminum)

AM ..... Amplitude Modulation

Amps ..... Amperes

AN ..... Air Force - Navy

ANSI ..... American National Standards Institute

AOAP ..... Army Oil Analysis Program

AP ..... Armor Piercing

API ..... Armor Piercing Incendiary

Appx ..... Appendix

APU ..... Auxiliary Power Unit

ARCS ..... Aerial Rocket Control System

Aux ..... Auxiliary

AVIM ..... Aviation Intermediate Maintenance

AVUM ..... Aviation Unit Maintenance

AWS ..... Area Weapon System

BBC ..... Back-Up Bus Controller

BD ..... Battle Damage

BDAR ..... Battle Damage Assessment and Repair

BDR ..... Battle Damage Repair

B.L. ..... Buttline

BRU ..... Boresight Reticle Unit

BUCS ..... Backup Control System

C ..... Celsius

CD ..... Cap Damage Depth

CDU ..... Computer Display Unit

CG ..... Center of Gravity

CL ..... Cap Damage Length

cm ..... Centimeter

CPG ..... Copilot/gunner

CRT ..... Cathode-Ray Tube

CS ..... Crew Station

Cu ..... Copper

D ..... Damage Distance Between Sites

DA ..... Department of the Army

DAP ..... Display Adjust Panel

DASEC ..... Digital Automatic Stabilization Equipment Computer

DC ..... Direct Current

Deg ..... Degrees

DEK ..... Data Entry Keyboard

DEU ..... Display Electronics Unit

Dia..... Diameter

Dir ..... Direction

Dist..... Distance

DL ..... Damage Length

DMM ..... Digital Multimeter

DNS ..... Doppler Navigation System

Ea..... Each

ECS..... Environmental Control System

EETF..... Electronic Equipment Test Facility

EIR ..... Equipment Improvement Recommendations

EMI..... Electromagnetic Interference

EN ..... Engine Nacelle

ENCU ..... Environmental Control Unit

Equiv ..... Equivalent

ESC..... External Stores Controller

ESS..... External Stores Subsystem

F..... Fahrenheit

FAB ..... Forward Avionics Bay

FCC..... Fire Control Computer

FCP ..... Fire Control Panel

FD/LS ..... Fault Detection/Location System

Fe..... Iron

FLIR ..... Forward Looking Infrared Radar

FM..... Frequency Modulation

FMC ..... Fully Mission Capable

FOD ..... Foreign Object Damage

F.S. ..... Fuselage Station

FSP ..... Flight Safety Part

FUS ..... Fuselage

Fwd ..... Forward

GB ..... Gearbox

GCB ..... Gun Control Box

GCU ..... Generator Control Unit

GFE ..... Government Furnished Equipment

GPU ..... Ground Power Unit

GS ..... Ground Stud

HARS ..... Heading Attitude Reference System

HEI ..... High Explosive Incendiary

HDU ..... Helmet Display Unit

HMU ..... Hydromechanical Unit

Hrs ..... Hours

Hz ..... Hertz

ICU ..... Integrated Control Unit

ident ..... Identify/Identity

IFF ..... Identification Friend or Foe

IGB ..... Intermediate Gearbox

IHADSS ..... Integrated Helmet and Display Sight System

IHU ..... Integrated Helmet Unit

ILT ..... Indicating Light Transmitting

in ..... Inches

IR ..... Infrared

Jett ..... Jettison

KHz ..... Kilohertz

km ..... Kilometer

Kts ..... Knots

L ..... Section Length

LEU ..... Laser Electronic Unit

LGS ..... Landing Gear System

LH ..... Left-Hand

LRU ..... Line Replaceable Unit

LSR ..... Laser

LVDT ..... Linear Voltage Differential Transducer

Max ..... Maximum

MFCC ..... Minimum Functional Combat Capability

MHz ..... Megahertz

Min ..... Minimum

MLG ..... Main Landing Gear

mm ..... Millimeter

MOC ..... Maintenance Operational Check

MOS ..... Military Occupational Specialty

M/R ..... Main Rotor

MRTU ..... Multiplex Remote Terminal Unit

MST ..... Maintenance Support Team

MUX ..... Multiplex

MWO ..... Maintenance Work Order

NAS ..... National Aircraft Standard

NBC ..... Nuclear, Biological, and Chemical

Ng ..... Engine Gas Generator RPM

NGB ..... Engine Nose Gearbox

No ..... Number

N_p ..... Engine Turbine Speed

N_R ..... Engine Rotor RPM

N_V ..... Vertical Load Factor

NSN ..... National Stock Number

NVS.....Night Vision Sensor

OAT.....Outside Air Temperature

ODAS.....Omni-Directional Airspeed Sensor

ORT.....Optical Relay Tube

PAC.....Pylon Actuator Controller

PAS.....Pressurized Air System

PM.....Phase Maintenance

PMS.....Preventive Maintenance Service

PNVS.....Pilot Night Vision System

POL.....Petrolatum, Oil, and Lubricant

QCA.....Quick Change Assembly

QDR.....Quality Deficiency Report

RCMC.....Rounds Counter/Magazine Controller

REF.....Reference

RH.....Right-Hand

RHE.....Remote Hellfire Electronics

RPSTL.....Repair Parts And Special Tools List

R/T.....Receiver/Transmitter

SD.....Stiffener Damage Depth

SDC.....Shaft Driven Compressor

SEU.....Sight Electronics Unit

SL.....Stiffener Damage Length

SOF.....Safety of Flight

SPAD.....Shear Pin Activated Decoupler

SSU.....Sensor Surveying Unit

SRU.....Shop Replaceable Unit

Sta.....Station

STAB.....Stabilator

t ..... thick or thickness

TADS ..... Target Acquisition and Designation Sight

TB ..... Technical Bulletin

TC ..... Tailcone/Tailboom

TCB ..... Turret Control Box

TCS ..... Turret Control System

TDA ..... Total Damage Area

TDR ..... Time Domain Reflectometer

TEU ..... TADS Electronic Unit Assembly

TGT ..... Turbine Gas Temperature

TM ..... Technical Manual

TMDE ..... Test, Measurement, and Diagnostic Equipment

T/R ..... Tail Rotor

TRS ..... Train Rate Sensor

UHF ..... Ultra High Frequency

U/M ..... Unit of Measure

VAC ..... Variable Alternating Current

VDC ..... Variable Direct Current

VDU ..... Video Display Unit

VHF ..... Very High Frequency

VS ..... Vertical Stabilizer

VSI ..... Vertical Speed Indicator

VTFS ..... Vertical Tail Fuselage Station

WI ..... Wings

WL ..... Web Damage Length

W.L ..... Waterline

Wt ..... Weight

Wshld ..... Windshield

XDCR ..... Transducer

XFEED ..... Crossfeed

XFER/Trans ..... Transfer

XK ..... Relay

XMSN ..... Transmission

SECTION II. DEFINITIONS OF UNUSUAL TERMS

A

Abrasion - Roughed surface, varying from light to severe.

Airframe Section - A major part of the airframe such as the cockpit, cabin, or tailboom.

Airframe Zone - An area or section of the airframe defined for the purpose of assessing battle damage.

ALCLAD - Bonded plating on aluminum sheet.

Allowance - A prescribed difference between the maximum condition of mating parts. The minimum clearance or maximum interference between such parts.

API - Armor piercing incendiary armament round.

Area Loss - The fractional planform area of a structural member removed by ballistic damage.

Assembly Clearance - The actual fit between two or more mating parts with respect to the amount of clearance or interference between them.

Assessment Rule - A specific criterion used to assess a particular damage condition.

Assessor - A trained maintenance technician whose function it is to assess aircraft battle damage.

Associated Parts - A group of parts which could contain one or more unrelated parts of a subassembly, one or more subassemblies, and attaching hardware.

Axial - Pertaining to the line about which a rotating body turns.

Axial load - Force or stress along the line about which a rotating body turns.

B

Battle Damage - Damage caused by ballistic projectiles, explosions, and fire.

Battle Damage Assessment - The process used to determine if repair of a battle damaged aircraft or system can be safely deferred either for a one-time evacuation flight or to return the aircraft to service for a limited number of flight hours. The three major tasks of battle damage assessment are damage inspection, damage evaluation, and repair deferrability assessment.

Bay - A place on the helicopter that houses systems, parts, or components.

Bay Group - Two or more adjacent bays in either direction.

Beam - A primary structural element designed to carry heavy loads by resisting bending in one direction. Usually constructed with a channel, tee, or "I" cross section.

Bend- Any change in an intended configuration.

Bore - Inside measurement of the interior diameter of a hole or tube. Also used to describe the hole itself.

Bowed - Curved or gradual deviation from original line or plane.

Box Beam - A primary structural element designed to carry heavy loads by resisting bending in at least two directions characterized by a square or rectangular hollow cross section.

Braid - Machine woven wire strands.

Break - Separation of a part or substance from itself.

Bridging - Jumping or bypassing of a part or component.

Brinelled - Circular indentations on bearing surfaces.

Buckle - Wrinkle or crease damage to sheet metal structural elements.

Bulkhead - Wall that separates bays or compartments.

Burn - Loss of metal resulting from overheating.

Burnishing - The smoothing of a metal surface by mechanical action without loss of material. Generally found on plain bearing surfaces. Surface discoloration is sometimes present around outer edges of a burnished area.

Burr - A rough edge or sharp projection.

Bus - A point that receives many electrical connections either for grounding or carrying a signal to further points.

Bushing - A round, removable part inserted in an opening to limit size, eliminate abrasion on parts passing through it, or to serve as a guide.

Buttline - Distance left or right of the helicopter centerline.

C

Cannibalization - The removal of needed parts or assemblies from other aircraft, equipment, or from non-essential systems on the helicopter undergoing repair.

Cap - A flat strip attached along top or bottom edge of beam, frame, or spar or around rib.

Catastrophic - A sudden and disastrous event caused by equipment failure which endangers human life.

Category I Structure - Primary framing members such as frames, beams, bulkheads, and longerons.

Category II Structure - Primary skins and stringers.

Category III Structure - Fixed secondary structures such as formers, intercostals, and channels.

Category IV Structure - Removable secondary structures such as fairings, cowlings, doors, and panels.

Chafed - Functional wear. A rubbing action between two parts having relative motion.

Channels - Structural member of channel form (e.g., top hat or U).

Chipping - Breaking away of small metallic particles.

Chord line - An imaginary line running perpendicular to the leading or trailing edge of a rotor blade.

Clockwise - A circular motion in the direction the hands of a clock rotate when viewed from the front.

Combat Capable - The ability of the helicopter to perform the minimum combat mission assignments.

Combat Emergency Capable - The ability of the helicopter to perform limited specific tactical mission assignments.

Compartment - An enclosed part of the helicopter.

Compression - The act of pressing together.

Condition 1 - Aircraft which are fully flight capable. No flight restrictions shall apply to this classification for 100 flight hours.

Condition 2 - Aircraft which are not fully flight capable but are capable of a self-recovery flight to a repair site.

Consumable Items - Parts or materials which are consumed by usage or which have a one-time usage in depot maintenance activity.

Core - The inner layer of material used to construct honeycomb structural panels.

Corrosion - Surface chemical action which results in surface discoloration, a layer of oxide, rust, or removal of surface metal.

Counter-Clockwise - The direction opposite to the direction the hands of a clock rotate, when viewed from the front.

Cowlings - A streamlined housing for aircraft components.

Crack - A break in some type of material.

Cripple - Damage to a load carrying structural member which would cause degradation of the helicopters full mission capability.

Criteria - Standards or rules used to judge.

D

Damage Cleanup - The process of removing and/or smoothing damaged material.

Damage Diagram - A sketch of a portion of the airframe used to define the location of damaged members.

Damage Evaluation - The process used to determine whether a damaged structure is serviceable or failed.

Damage Inspection - The process of inspecting for the purpose of locating, identifying, classifying, and recording battle damage.

Damage Labels - Marks and symbols placed on a structural member to identify areas of damage.

Damage Limit - The amount of damage to a member which, if exceeded, requires repair.

Damage Measurement - The process of determining the dimensions of damage to a structure.

Damage Mode - A type of damage such as a crack, hole or spall.

Damage Monitoring - Periodic inspections of unrepaired damage to check for deterioration and damage growth.

Damage Report - A form for recording damage by type, location and nature of damage. Damage measurements and failure criteria are also recorded.

Deferment, Type I - Battle damage that can be deferred up to 100 flight hours with an unrestricted flight envelope.

Deferment. Type II - Battle damage that can be deferred for a one-time flight with a restricted flight envelope.

Decontamination - To make an item safe for unprotected personnel by removing, neutralizing, or destroying any harmful substance. A function of Nuclear, Biological, and Chemical (NBC) Warfare.

Dent - Indentation in metal surface produced by an object striking with force.

Diffuser - Scatters. Deflects air or energy in several directions.

Distortion - A change from an original shape.

Duct - Tube that directs flow of air or exhaust.

E

Eductor - An injector-type device for mixing two fluids.

Elongated - Made longer.

Empennage - The stabilator and vertical stabilizer.

Erosion - Wearing away of metal.

Evacuation - A combat service support function which involves the movement of recovered helicopters from a main supply route, maintenance collection point, or maintenance activity to higher categories of maintenance.

Expedient - A rapid and often non-standard method of repairing an item (repair technique).

F

Failure Mode - The specific cause of failure, relating to categories such as cracks, corrosion, ballistic impact, etc.

Fairing - A cover made to streamline a surface.

Fatigue Failure - Sharp indentations, cracks, tool marks, or inclusions that result in progressive yielding of one or more local areas of material.

Fix - Any rapid action that returns a damaged part or assembly to full or an acceptably degraded operating condition (repair technique).

Flaking - Loose particles of metal or evidence of separation of a surface covering material.

Flange - A broad ridge or pair of ridges projecting from the edge of a structural element, providing additional strength or a place for attachment.

Fluorescent Penetrant - A test for locating cracks and fissures in non-magnetic material, making use of radiation properties of fluorescent particles when exposed to ultraviolet light.

Fracture - Separation of a part or piece of material from itself.

Fraying - Loose or raveled threads and fibers.

Fuselage Station - Distance from a point in front of the helicopter.

G

Galling - Transfer of metal from one surface to another surface by welding and breakaway of particles during sliding friction contact.

Gouging - Removal of surface metal because of mechanical contact with foreign material.

Glazing (Glazed) - Appearance of being covered by a glassy film.

H

Heat discoloration - A change in color or appearance of a part, caused by excessive temperature.

I

Impact - Two or more objects coming together with force.

Interchangeable - Can be used in place of a similar item to do the same job.

J

Jury Rigging - A rapid non-standard method of repairing an item (repair technique).

K

L

Lateral - Coming from the side.

Load Path - The route taken by a mechanical force traveling through an airframe structure.

Longeron - A principle longitudinal (fore and aft), structural element continuous across several points of support.

Longitudinal - With the length, or lengthwise dimension.

M

Maintenance Collection Point - A point operated by AVIM units for the collection of equipment for repair.

Maintenance Support Team - A team consisting of AVUM and AVIM mechanics and technical specialist who are trained in assessing battle damage in addition to their routine speciality.

Manifold - A housing with two or more openings to collect and direct flow of liquid, air, or gas.

Mission Function Combat Capable - The ability of the helicopter to perform the minimum combat mission assignments.

Mode - A particular way, manner, angle, condition, or arrangement of operation.

N

National Stock Number - The assigned identifying number for an item of supply, consisting of the four-digit Federal Supply Class (FSC), and nine-digit National Stock Identification Number (NIN).

Nick - A local break or notch in the edge of material.

Nomenclature - Name of an item. May include serial numbers or other information.

0

Overhaul - The process of repairing or adjusting a machine to restore, improve, or lengthen its useful life.

P

Peeling - A breaking away of surface finishes such as coatings or platings, or flaking of large pieces of such material.

Pigtail - A group of electrical wire strands twisted together.

Pitch - Up-and-down movement. Blade angle in relation to horizontal or vertical.

Pitting - Small holes or indentations, generally caused by rust, corrosion, high compressive stresses, or metal-to-metal pounding.

Pivot - A shaft, pin, or part on which something turns or revolves.

Primary Damage - Damage caused directly by the ballistic projectiles, explosions, or fire associated with an attack.

Primary Structure - The major structural load carrying elements of an airframe.

Protective Coating - An external surface treatment, such as paint, anodizing, electroplating or chemical film, used to delay the effects of corrosive or atmospheric elements upon metals.

Proximity - Near, or within close range.

Pylon - The box shaped structural area surrounding the helicopter main transmission. This area carries several primary structural loads.

Q

R

Radially - Moving or directing along a radius from a center.

Recovery - The retrieval of immobile, inoperative, or abandoned helicopters from the battlefield or immediate vicinity and its movement to a maintenance collection point, main supply route, or a maintenance activity for disposition, repair, or evacuation.

Retaining - Describes a device or part that holds or restrains.

Rupture - The breaking of an airframe structural element or skin due to overstress/hostile fire.

S

Scoring - Lines, grooves, or scratches worn into a surface.

Secondary Damage - Damage to structural members not directly exposed to the attack, caused by flying aircraft with battle-damaged members failed or missing. The non-flight safety structural elements of an airframe.

Self-Recovery - The ability of the helicopter to fly at reduced airspeed and altitude from the battlefield or immediate vicinity to a maintenance collection point, the main supply route, or maintenance activity for disposition, repair or evacuation.

Semimonocoque - A structural design which relies on strength of the skin to carry a large portion of the load. The skin is normally reinforced by longerons/stringers and vertical bulkheads/frames, but has no diagonal bracing, leaving the interior basically hollow.

Serviceable Part - A part or component that is fully operational and without exterior damage.

Shim - A thin piece of material used to fill in space between parts for support, leveling, or adjustment.

Skin - The aerodynamic exterior covering of the helicopter.

Spalling - Chipped or flaked surface caused by the breaking away of the hardened metal and separation of the case from the core.

Spar - A primary structural element designed to carry weight and resist bending loads in wings and rotor blades. Spars typically extend the full length of the wing, and taper down to a smaller cross section toward the tip of the wing.

Station - Positions on the helicopter measured from a point in front of the nose.

Stiffener - A longitudinal (fore and aft) structural element used in semimonocoque design which stiffens the skin.

Stop Hole- A hole intentionally drilled at the end of a crack, or saw cut which normally will prevent further propagation of the crack.

Stringer - A longitudinal (fore and aft) structural element used in semimonocoque design which stiffens the skin.

Suitable Substitute - A part or component which is similar to the original in material, function, and performance.

T

Tangentially - Moving along in direction of a tangent point where a line, curve, or surface makes contact at a single point (not intersecting) with another line, curve, or surface.

Tolerance - The difference between two limiting sizes as a means of specifying the degree of accuracy.

Torque - Measurement of the tightness of threaded hardware. A torque wrench is used to measure (and control) the tightness of bolts, screws, nuts, etc.

Triage - The sorting of and allocation of battle-damaged aircraft according to a system of priorities designed to maximize number of aircraft availability (deferral of repair, repair, or cannibalize and destroy).

U

V

Viscosity - The property of a fluid that tends to resist the force trying to make it flow such as gravity or applied pressure.

W

Warpage - The bending or twisting damage causing a structural element to weaken and permanently loose its original shape.

Waterline - Distance from a point below the helicopter parallel to the fuselage center line.

Web - The sheet metal membrane connecting the upper and lower flanges of a frame, beam, or spar. Provides overall rigidity to the airframe structure.

X

Y

Z

ALPHABETICAL INDEX

Subject	Para No.
A	
Access to Damaged Structure	2-9
ACM/BDR Electrical Wiring System Repair Definitions and Capabilities	9-11
ACM/BDR Wiring Repair Kits	9-10
Air Line Repair, Bleed	13-12
Aircraft Systems, Evaluating the Effect of Structural Damage on Other	2-37
Aircraft Zones	1-23
Aircraft Zone Location	2-6
Airframe Areas, Critical	2-21
Airframe Structural Material Charts	2-57
Application	1-3
Armor-Piercing and Armor-Piercing Incendiary Projectiles	1-31
Armor-Piercing-Incendiary Projectiles, Armor-Piercing and	1-31
Assessment Chart, Triage	1-24
Assessment Procedure	
Airframe	2-3
Area Weapons System	19-3
Auxiliary Power Unit	15-3
Avionics	18-3
Drive System	6-3
Electrical System	9-3
Environmental Control System	13-3
Flight Control System	11-3
Fuel System	10-3
Hydraulic and Pneumatic Systems	7-3
Instruments	8-3
Landing Gear System	3-3
Mission Equipment	16-3
Power Plant Installation System	4-3
Rotor System	5-3
Utility System	12-3
Assessment Procedures, Battle Damage	1-22
Assessment, Repair Deferrability	2-38
Assessment, Serviceability	1-10
Assessment/Evaluation, Damage	1-9
Assessor Responsibilities	1-19
Assessor, Battle Damage	1-18
Assurance and Quality Control, Quality	1-20
Avionic Repairs, Electrical and	9-8
B	
Battle Damage Assessment Procedures	1-22
Battle Damage Assessor	1-18
Battle Damage Inspection	2-7
BDR Characteristics	1-5
BDR Materials	2-44
BDR Procedures	2-45
BDR Repairs, Tagging/Identifying	1-27
BDR Tools and Materials	1-21
Beam (Repair External), Repair Concept 7: Bulkhead Involving Damage to the Web and Support	2-53
Beams, Evaluation of Damage to Machined Frames and	2-23
Beams, Frames, Spars, and Bulkheads, Evaluation of Damage to Built-Up Sheet Metal	2-22
Beams Involving Damage to the Web and Outer Cap, Repair Concept 8:	2-54

Subject	Para No.
Beams Involving Damage to the Web and Outer Cap (Repair External), Repair Concept 9:	2-55
Blade Repair, Main Rotor	5-8
Bleed Air Line Repair	13-12
Bulkhead Involving Damage to the Web and Support Beam (Repair External), Repair Concept 7:	2-53
Bulkheads, Evaluation of Damage to Built-Up Sheet Metal Beams, Frames, Spars, and	2-22

C

Cable Repair Segments, Shielded	9-13
Cable Splice Repair, Shielded	9-12
Cannibalization	1-12
Cannibalization Criteria	
Airframe	2-4
Area Weapons System	19-5
Auxiliary Power Unit	15-5
Avionics	18-5
Drive System	6-5
Electrical System	9-5
Environmental Control System	13-5
Flight Control System	11-5
Fuel System	10-5
Hydraulic and Pneumatic Systems	7-5
Instruments	8-5
Landing Gear System	3-5
Mission Equipment	16-5
Power Plant Installation System	4-5
Rotor System	5-5
Utility System	12-5
Canopy, Evaluation of Damage to	2-33
Cap, Repair Concept 8: Beams Involving Damage to the Web and Outer	2-54
Cap (Repair External), Repair Concept 9: Beams Involving Damage to the Web and Outer	2-55
Cap and Web, Repair Concept 6: Forged/Machined Frame Involving Damage to Frame	2-52
Capabilities, ACM/BDR Electrical Wiring System Repair Definitions and	9-11
Channels, Evaluation of Damage to Sheet Metal Ribs, Formers, Intercostals, and	2-32
Characteristics, BDR	1-5
Characteristics, Operating	1-16
Chart, Triage Assessment	1-24
Classifications, Flight Capability	1-15
Cleaning	2-8
Coating Repair, Electro Magnetic Interference (EMI) Panel	2-56
Control Rod Repair	11-8
Control, Quality Assurance and Quality	1-20
Cracks, Inspecting for	2-11
Criteria, Cannibalization	
Airframe	2-4
Area Weapons System	19-5
Auxiliary Power Unit	15-5
Avionics	18-5
Drive System	6-5
Electrical System	9-5
Environmental Control System	13-5
Flight Control System	11-5
Fuel System	10-5
Hydraulic and Pneumatic Systems	7-5
Instruments	8-5
Landing Gear System	3-5
Mission Equipment	16-5
Power Plant Installation System	4-5
Rotor System	5-5
Utility System	12-5
Criteria, Fuel Cell Damage Repair	10-10

Subject — Para No.

Criteria, Serviceability
- Area Weapons System 19-4
- Auxiliary Power Unit 15-4
- Avionics 18-4
- Drive System 6-4
- Electrical System 9-4
- Environmental Control System 13-4
- Flight Control System 11-4
- Fuel System 10-4
- Hydraulic and Pneumatic Systems 7-4
- Instruments 8-4
- Landing Gear System 3-4
- Mission Equipment 16-4
- Power Plant Installation System 4-4
- Rotor System 5-4
- Utility System 12-4

Critical Airframe Areas 2-21

D

Damage Assessment/Evaluation 1-9
Damage in Adjoining Areas, Detecting Substructural 2-15
Damage Evaluation 2-18
Damage Evaluation Process 2-20
Damage, Labeling and Recording 2-17
Damage Limit Tables, Type I (100 Flight Hours) 2-40
Damage Limit Tables, Type II (One-Time Flight) 2-41
Damage, Locating 2-10
Damage Measurement 2-19
Damage Modes, Structure 1-35
Damage Monitoring 2-39
Damage Repair Criteria, Fuel Cell 10-10
Damage Repair, ENCU Surface 13-8
Damage, Inspecting for Fire 2-14
Damaged Structure, Access to 2-9
Decks, Evaluation of Damage to Sheet Metal Floor and 2-31
Deferment Tables, Type I (100 Flight Hours) 2-42
Deferment Tables, Type II (One-Time Flight) 2-43
Deferrability Assessment, Repair 2-38
Deferred Maintenance 1-7
Definitions and Capabilities, ACM/BDR Electrical Wiring System Repair 9-11
Definitions, Terms and 1-4
Description and Location, System
- Airframe 2-2
- Area Weapons System 19-2
- Auxiliary Power Unit 15-2
- Avionics 18-2
- Drive System 6-2
- Electrical System 9-2
- Environmental Control System 13-2
- Flight Control System 11-2
- Fuel System 10-2
- Hydraulic and Pneumatic Systems 7-2
- Instruments 8-2
- Landing Gear System 3-2
- Mission Equipment 16-2
- Power Plant Installation System 4-2
- Rotor System 5-2
- Utility System 12-2

Description, Threat 1-30
Detecting Substructural Damage in Adjoining Areas 2-15
Door Jams, Evaluation of Damage to Doors and 2-34
Doors and Door Jams, Evaluation of Damage to 2-34
Doublers, and Gussets (Joints), Evaluation of Damage to Splices, Straps, ... 2-26
Duct Repair 13-10

Subject Para No.

Electrical and Avionic Repairs 9-8
Electrical Wiring System Repair Definitions and Capabilities, ACM/BDR 9-11
Electro Magnetic Interference (EMI) Panel Coating Repair 2-56
Empennage Assembly Removal/Installation D-2
ENCU Surface Damage Repair 13-8
Entrance and Exit Wounds, Locating 1-25
Estimating Projectile Paths and Fragment Patterns 1-26
Evaluating the Effect of Structural Damage on Other Aircraft Systems 2-37
Evaluation of Combined Skin Panel/Stringer Frame Damage 2-29
Evaluation, Damage 2-18
Evaluation, Damage Assessment 1-9
Evaluation of Damage to Built-Up Sheet Metal Beams, Frames, Spars, and Bulkheads 2-22
Evaluation of Damage to Canopy 2-33
Evaluation of Damage to Doors and Door Jams 2-34
Evaluation of Damage to Fairings and Nacelles 2-35
Evaluation of Damage to Firewalls 2-36
Evaluation of Damage to Honeycomb-Sandwich Panels 2-30
Evaluation of Damage to Longerons 2-25
Evaluation of Damage to Machined Fittings 2-24
Evaluation of Damage to Machined Frames and Beams 2-23
Evaluation of Damage to Sheet Metal Floor and Decks 2-31
Evaluation of Damage to Sheet Metal Ribs, Formers, Intercostals, and Channels 2-32
Evaluation of Damage to Skin Panels 2-28
Evaluation of Damage to Splices, Straps, Doublers, and Gussets (Joints) 2-26
Evaluation of Damage to Stringers 2-27
Evaluation Process, Damage 2-20
Exit Wounds, Locating Entrance and 1-25
Expedient Removals 1-13
Expedient Repair Schemes 2-46
External Fuel Tank Repair 10-13

F

Fairings and Nacelles, Evaluation of Damage to 2-35
Fasteners, Inspecting for Broken and Missing 2-16
Fire Damage, Inspecting for 2-14
Firewalls, Evaluation of Damage to 2-36
Fittings, Evaluation of Damage to Machined 2-24
Flight Capability Classifications 1-15
Floor and Decks, Evaluation of Damage to Sheet Metal 2-31
Forged/Machined Frame Involving Damage to Frame Cap and Web, Repair Concept 6: 2-52
Formers, Intercostals, and Channels, Evaluation of Damage to Sheet Metal Ribs 2-32
Forms, Maintenance of 1-28
Fragment Patterns, Estimating Projectile Paths and 1-26
Fragments, Inspecting for Imbedded Projectiles and 2-13
Frame Cap and Web, Repair Concept 6: Forged/Frame Involving Damage to 2-52
Frame Damage, Evaluation of Combined Skin Panel/Stringer 2-29
Frame (Frame Repaired with Straight Channel Section, Stringer Repaired Externally), Repair Concept 2:
Semi-Monocoque Structure Involving Damage to Skin, Stringer, and 2-48

Subject | Para No.

Frame (Frame Repaired with Thick Aluminum Plate, Stringer Repaired Externally), Repair Concept 3:
Semi-Monocoque Structure Involving Damage to Skin, Stringer, and 2-49
Frames and Beams, Evaluation of Damage to Machined 2-23
Frames, Spars, and Bulkheads, Evaluation of Damage to Built-Up Sheet Metal Beams 2-22
Fuel Cell Damage Repair Criteria 10-10
Fuel Cell Repair 10-11
Fuel Line and Hose Repair 10-8
Fuel Tank Repair, External 10-13

G

Gearbox Removal/Installation, Tail Rotor D-4
General
- Bleed Air Lines 13-11
- Cannibalization Candidates List D-1
- Control Rods 11-7
- Ducting 13-9 Electrical Wiring 9-7
- Environmental Control Unit (ENCU) 13-7
- External Fuel Tank 10-12
- Fuel Cell 10-9
- Fuel Lines and Hoses 10-7
- Hydraulic Tubing 7-7
- Interchangeable Parts E-2
- Introduction E-1
- Main Rotor Blades 5-7
- Mission Capabilities F-1
- O-Rings, Packings, and Gaskets E-3
- Petrolatum, Oil, and Lubricant (POL) E-4
- Structural Fasteners E-6
- Structural Metal Alloys E-5

Gussets (Joints), Evaluation of Damage to Splices, Straps, Doublers, and 2-26

H

High-Explosive-Incendiary Projectiles 1-32
Honeycomb-Sandwich Panels, Evaluation of Damage to 2-30
Hose Repair, Fuel Line and 10-8

I

Identifying BDR Repairs, Tagging/ 1-27
Imbedded Projectiles and Fragments, Inspecting for 2-13
Index, Repair Procedure
- Airframe 2-5
- Area Weapons System 19-6
- Auxiliary Power Unit 15-6
- Avionics 18-6
- Drive System 6-6
- Electrical System 9-6
- Environmental Control System 13-6
- Flight Control System 11-6
- Fuel System 10-6
- Hydraulic and Pneumatic Systems 7-6
- Instruments 8-6
- Landing Gear System 3-6
- Mission Equipment 16-6
- Power Plant Installation System 4-6
- Rotor System 5-6
- Utility System 12-6

Inspecting for Broken and Missing Fasteners 2-16
Inspecting for Cracks 2-11
Inspecting for Fire Damage 2-14
Inspecting for Imbedded Projectiles and Fragments 2-13
Inspecting for Structural Changes 2-12
Inspection, Battle Damage 2-7
Inspections 1-6

Subject	Para No.
Intercostals, and Channels, Evaluation of Damage to Sheet Metal Ribs, Formers	2-32
Isolation of Nonessential Systems	9-9

J

K

Kits, ACM/BDR Wiring Repair	9-10

L

Labeling and Recording Damage	2-17
Landing Gear Removal/Installation, Main	D-6
Landing Gear Removal/Installation, Tail	D-5
Line and Hose Repair, Fuel	10-8
Line Repair, Bleed Air	13-12
Locating Damage	2-10
Locating Entrance and Exit Wounds	1-25
Location, System Description and	
Airframe	2-2
Area Weapons System	19-2
Auxiliary Power Unit	15-2
Avionics	18-2
Drive System	6-2
Electrical System	9-2
Environmental Control System	13-2
Flight Control System	11-2
Fuel System	10-2
Hydraulic and Pneumatic Systems	7-2
Instruments	8-2
Landing Gear System	3-2
Mission Equipment	16-2
Power Plant Installation System	4-2
Rotor System	5-2
Utility System	12-2
Longerons, Evaluation of Damage to	2-25

M

Machined Fittings, Evaluation of Damage to	2-24
Machined Frame Involving Damage to Frame Cap and Web, Repair Concept 6: Forged/	2-52
Machined Frames and Beams, Evaluation of Damage to	2-23
Main Landing Gear Removal/Installation	D-6
Main Rotor Blade Repair	5-8
Maintenance, Deferred	1-7
Maintenance of Forms	1-28
Material Charts, Airframe Structural	2-57
Materials, BDR	2-44
Materials, BDR Tools and	1-21
Measurement, Damage	2-19

N

Nacelles, Evaluation of Damage to Fairings and	2-35
NBC Warfare	1-33
Nonessential Systems, Isolation of	9-9

O

Operating Characteristics	1-16

P

Panel Coating Repair, Electro Magnetic Interference (EMI)	2-56
Panel/Stringer Frame Damage, Evaluation of Combined Skin	2-29
Panels, Evaluation of Damage to Honeycomb-Sandwich	2-30
Precautions, Waiver of	1-14

Subject	Para No
Procedure Index, Repair	
Airframe	2-5
Area Weapons System	19-6
Auxiliary Power Unit	15-6
Avionics	18-6
Drive System	6-6
Electrical System	9-6
Environmental Control System	13-6
Flight Control System	11-6
Fuel System	10-6
Hydraulic and Pneumatic Systems	7-6
Instruments	8-6
Landing Gear System	3-6
Mission Equipment	16-6
Power Plant Installation System	4-6
Rotor System	5-6
Utility System	12-6
Procedure, Assessment	
Airframe	2-3
Area Weapons System	19-3
Auxiliary Power Unit	15-3
Avionics	18-3
Drive System	6-3
Electrical System	9-3
Environmental Control System	13-3
Flight Control System	11-3
Fuel System	10-3
Hydraulic and Pneumatic Systems	7-3
Instruments	8-3
Landing Gear System	3-3
Mission Equipment	16-3
Power Plant Installation System	4-3
Rotor System	5-3
Utility System	12-3
Procedures, Battle Damage Assessment	1-22
Procedures, BDR	2-45
Projectile Paths and Fragment Patterns, Estimating	1-26
Projectiles, Armor-Piercing and Armor-Piercing-Incendiary	1-31
Projectiles and Fragments, Inspecting for Imbedded	2-13
Projectiles, High-Explosive-Incendiary	1-32
Purpose	1-1
Pylon Removal/Installation, Wing/	D-7
Q	
Quality Assurance and Quality Control	1-20
Quality Control, Quality Assurance and	1-20
R	
Recording Damage, Labeling and	2-17
Removals, Expedient	1-13
Repair, Bleed Air Line	13-12
Repair Concept 1: Semi-Monocoque Structure Involving Damage to Skins and Stringers (Stringer Repaired Externally)	2-47
Repair Concept 2: Semi-Monocoque Structure Involving Damage to Skin, Stringer, and Frame (Frame Repaired with Straight Channel Section, Stringer Repaired Externally)	2-48
Repair Concept 3: Semi-Monocoque Structure Involving Damage to Skin, Stringer, and Frame (Frame Repaired with Thick Aluminum Plate, Stringer Repaired Externally)	2-49
Repair Concept 4: Vertical Spar Involving Damage to Spar Cap and Web	2-50
Repair Concept 5: Stabilator Spar Involving Damage to the Spar Cap and Web	2-51
Repair Concept 6: Forged/Machined Frame Involving Damage to Frame Cap and Web	2-52
Repair Concept 7: Bulkhead Involving Damage to the Web and Support Beam (Repair External)	2-53

Subject	Para No.
Repair Concept 8: Beams Involving Damage to the Web and Outer Cap	2-54
Repair Concept 9: Beams Involving Damage to the Web and Outer Cap (Repair External)	2-55
Repair Criteria, Fuel Cell Damage	10-10
Repair Deferrability Assessment	2-38
Repair Definitions and Capabilities, ACM/BDR Electrical Wiring System	9-11
Repair, Duct	13-10
Repair, Electro Magnetic Interference EMI) Panel Coating	2-56
Repair, Environmental Control Unit (ENCU) Surface Damage	13-8
Repair, Fuel Cell	10-11
Repair, Fuel Line and Hose	10-8
Repair Kits, ACM/BDR VViring	9-10
Repair, Main Rotor Blade	5-8
Repair Procedure Index	
Airframe	2-5
Area Weapons System	19-6
Auxiliary Power Unit	15-6
Avionics	18-6
Drive System	6-6
Electrical System	9-6
Environmental Control System.	13-6
Flight Control System	11-6
Fuel System	10-6
Hydraulic and Pneumatic Systems	7-6
Instruments	8-6
Landing Gear System	3-6
Mission Equipment	16-6
Power Plant Installation System	4-6
Rotor System	5-6
Utility System	12-6
Repair Schemes, Expedient	2-46
Repair Segments, Shielded Cable	9-13
Repair, Shielded Cable Splice	9-12
Repair, Tubing	7-8
Repairs, Electrical and Avionic	9-8
Repairs, Tagging/Identifying BDR	1-27
Reports	1-29
Responsibilities, Assessor	1-19
Ribs, Formers, Intercostals, and Channels, Evaluation of Damage to Sheet Metal	2-32
Rotor Assembly Removal/Installation, Upper	D-3
Rotor Blade Repair, Main	5-8
Rotor Gearbox Removal/Installation, Tail	D-4

S

Scope	
Airframe	2-1
Area Weapons System	19-1
Auxiliary Power Unit	15-1
Avionics	18-1
Drive System	6-1
Electrical System	9-1
Environmental Control System	13-1
Flight Control System	11-1
Fuel System	10-1
General Information	1-2
Hydraulic and Pneumatic Systems	7-1
Instruments	8-1
Landing Gear System	3-1
Mission Equipment	16-1
Power Plant Installation System	4-1
Rotor System	5-1
Utility System	12-1
Segments, Shielded Cable Repair	9-13
Semi-Monocoque Structure Involving Damage to Skins and Stringers (Stringer Repaired Externally), Repair Concept 1:	2-47
Semi-Monocoque Structure Involving Damage to Skin, Stringer, and Frame (Frame Repaired with Straight Channel Section, Stringer Repaired Externally), Repair Concept 2:	2-48
Serviceability Assessment	1-10

Subject	Para No
Serviceability Criteria	
Area Weapons System	19-4
Auxiliary Power Unit	15-4
Avionics	18-4
Drive System	6-4
Electrical System	9-4
Environmental Control System	13-4
Flight Control System	11-4
Fuel System	10-4
Hydraulic and Pneumatic Systems	7-4
Instruments	8-4
Landing Gear System	3-4
Mission Equipment	16-4
Power Plant Installation System	4-4
Rotor System	5-4
Utility System	12-4
Servicing	1-11
Sheet Metal Beams, Frames, Spars, and Bulkheads, Evaluation of Damage to Built-Up	2-22
Sheet Metal Floor and Decks, Evaluation of Damage to	2-31
Sheet Metal Ribs, Formers, Intercostals, and Channels, Evaluation of Damage to	2-32
Shielded Cable Repair Segments	9-13
Shielded Cable Splice Repair	9-12
Skin, Stringer, and Frame (Frame Repaired with Straight Channel Section, Stringer Repaired Externally), Repair Concept 2: Semi-Monocoque Structure Involving Damage to	2-48
Skin, Stringer, and Frame (Frame Repaired with Thick Aluminum Plate, Stringer Repaired Externally), Repair Concept 3: Semi-Monocoque Structure Involving Damage to	2-49
Skins and Stringers (Stringer Repaired Externally), Repair Concept 1: Semi-Monocoque Structure Involving Damage to	2-47
Skin Panel/Stringer Frame Damage, Evaluation of Combined	2-29
Skin Panels, Evaluation of Damage to	2-28
Spar Cap and Web, Repair Concept 4: Vertical Spar Involving Damage to	2-50
Spar Cap and Web, Repair Concept 5: Stabilator Spar Involving Damage to the	2-51
Spars, and Bulkheads, Evaluation of Damage to Built-Up Sheet Metal Beams, Frames	2-22
Splice Repair, Shielded Cable	9-12
Splices, Straps, Doublers, and Gussets (Joints), Evaluation of Damage to	2-26
Stabilator Spar Involving Damage to the Spar Cap and Web, Repair Concept 5:	2-51
Straps, Doublers, and Gussets (Joints), Evaluation of Damage to Splices	2-26
Stringer Frame Damage, Evaluation of Combined Skin Panel	2-29
Stringer, and Frame (Frame Repaired with Straight Channel Section, Stringer Repaired Externally), Repair Concept 2: Semi-Monocoque Structure Involving Damage to Skin	2-48
Stringer, and Frame (Frame Repaired with Thick Aluminum Plate, Stringer Repaired Externally), Repair Concept 3. Semi-Monocoque Structure Involving Damage to Skin	2-49
Stringers, Evaluation of Damage to	2-27
Stringers (Stringer Repaired Externally), Repair Concept 1: Semi-Monocoque Structure Involving Damage to Skins and	2-47
Structural Changes, Inspecting for	2-12
Structural Damage on Other Aircraft Systems; Evaluating the Effect of	2-37
Structural Material Charts, Airframe	2-57
Structure Damage Modes	1-35
Substructural Damage in Adjoining Areas, Detecting	2-15
Support Beam (Repair External), Repair Concept 7: Bulkhead Involving Damage to the Web and	2-53

Subject | Para No.

System Description and Location
Airframe 2-2
Area Weapons System 19-2
Auxiliary Power Unit 15-2
Avionics 18-2
Drive System 6-2
Electrical System 9-2
Environmental Control System 13-2
Flight Control System 11-2
Fuel System 10-2
Hydraulic and Pneumatic Systems 7-2
Instruments 8-2
Landing Gear System 3-2
Mission Equipment 16-2
Power Plant Installation System 4-2
Rotor System 5-2
Utility System 12-2
Systems, Isolation of Nonessential 9-9

T

Tagging/Identifying BDR Repairs 1-27
Tail Landing Gear Removal/Installation D-5
Tail Rotor Gearbox Removal/Installation D-4
Tank Repair, External Fuel 10-13
Terms and Definitions 1-4
Threat Description 1-30
Threats on the Ground 1-34
Tools and Materials, BDR 1-21
Training 1-17
Triage Assessment Chart 1-24
Tubing Repair 7-8
Type I (100 Flight Hours) Damage Limit Tables 2-40
Type I (100 Flight Hours) Deferment Tables 2-42
Type II (One-Time Flight) Damage Limit Tables 2-41
Type II (One-Time Flight) Deferment Tables 2-43

U

Upper Rotor Assembly Removal/Installation D-3

V

Vertical Spar Involving Damage to Spar Cap and Web, Repair Concept 4: 2-50

W

Waiver of Precautions 1-14
Warfare, NBC 1-33
Web and Outer Cap, Repair Concept 8: Beams Involving Damage to the 2-54
Web and Outer Cap (Repair External), Repair Concept 9: Beams Involving Damage to the 2-55
Web and Support Beam (Repair External), Repair Concept 7: Bulkhead Involving Damage to the 2-53
Web, Repair Concept 4: Vertical Spar Involving Damage to Spar Cap and 2-50
Web, Repair Concept 5: Stabilator Spar Involving Damage to the Spar Cap and 2-51

Subject Para No.

Web, Repair Concept 6: Forged/Machined Frame Involving Damage to Frame Cap and Web 2-52
Wing/Pylon Removal/Installation D-7
Wiring Repair Kits, ACM/BDR 9-10
Wiring System Repair Definitions and Capabilities, ACM/BDR Electrical 9-11
Wounds, Locating Entrance and Exit 1-25

X

Y

Z

Zone Location, Aircraft 2-6
Zones, Aircraft 1-23

By Order of the Secretary of the Army:

DENNIS J. REIMER
General, United States Army
Chief of Staff

Official:

JOEL B. HUDSON
Acting Administrative Assistant to the
Secretary of the Army

01685

DISTRIBUTION:
To be distributed in accordance with DA Form 12-31-E, block no. 3580 , requirements for TM 1-1520-238-BD.

*US. GOVERNMENT PRINTNG OFFICE: 1996-755-025/40109

TEAR ALONG PERFORATED LINE

RECOMMENDED CHANGES TO EQUIPMENT TECHNICAL PUBLICATIONS

THEN...JOT DOWN THE DOPE ABOUT IT ON THIS FORM. CAREFULLY TEAR IT OUT, FOLD IT AND DROP IT IN THE MAIL.

SOMETHING WRONG WITH PUBLICATION

FROM: (PRINT YOUR UNIT'S COMPLETE ADDRESS)

DATE SENT

PUBLICATION NUMBER	PUBLICATION DATE	PUBLICATION TITLE

BE EXACT PIN-POINT WHERE IT IS

PAGE NO.	PARA-GRAPH	FIGURE NO.	TABLE NO.

IN THIS SPACE, TELL WHAT IS WRONG AND WHAT SHOULD BE DONE ABOUT IT.

PRINTED NAME, GRADE OR TITLE AND TELEPHONE NUMBER	SIGN HERE

DA FORM 1 JUL 79 2028-2

PREVIOUS EDITIONS ARE OBSOLETE.

P.S.--IF YOUR OUTFIT WANTS TO KNOW ABOUT YOUR RECOMMENDATION MAKE A CARBON COPY OF THIS AND GIVE IT TO YOUR HEADQUARTERS.

The Metric System and Equivalents

Linear Measure

1 centimeter = 10 millimeters = .39 inch
1 decimeter = 10 centimeters = 3.94 inches
1 meter = 10 decimeters = 39.37 inches
1 dekameter = 10 meters = 32.8 feet
1 hectometer = 10 dekameters = 328.08 feet
1 kilometer = 10 hectometers = 3,280.8 feet

Weights

1 centigram = 10 milligrams = .15 grain
1 decigram = 10 centigrams = 1.54 grains
1 gram = 10 decigram = .035 ounce
1 dekagram = 10 grams = .35 ounce
1 hectogram = 10 dekagrams = 3.52 ounces
1 kilogram = 10 hectograms = 2.2 pounds
1 quintal = 100 kilograms = 220.46 pounds
1 metric ton = 10 quintals = 1.1 short tons

Liquid Measure

1 centiliter = 10 milliters = .34 fl. ounce
1 deciliter = 10 centiliters = 3.38 fl. ounces
1 liter = 10 deciliters = 33.81 fl. ounces
1 dekaliter = 10 liters = 2.64 gallons
1 hectoliter = 10 dekaliters = 26.42 gallons
1 kiloliter = 10 hectoliters = 264.18 gallons

Square Measure

1 sq. centimeter = 100 sq. millimeters = .155 sq. inch
1 sq. decimeter = 100 sq. centimeters = 15.5 sq. inches
1 sq. meter (centare) = 100 sq. decimeters = 10.76 sq. feet
1 sq. dekameter (are) = 100 sq. meters = 1,076.4 sq. feet
1 sq. hectometer (hectare) = 100 sq. dekameters = 2.47 acres
1 sq. kilometer = 100 sq. hectometers = .386 sq. mile

Cubic Measure

1 cu. centimeter = 1000 cu. millimeters = .06 cu. inch
1 cu. decimeter = 1000 cu. centimeters = 61.02 cu. inches
1 cu. meter = 1000 cu. decimeters = 35.31 cu. feet

Approximate Conversion Factors

To change	*To*	*Multiply by*	*To change*	*To*	*Multiply by*
inches	centimeters	2.540	ounce-inches	newton-meters	.007062
feet	meters	.305	centimeters	inches	.394
yards	meters	.914	meters	feet	3.280
miles	kilometers	1.609	meters	yards	1.094
square inches	square centimeters	6.451	kilometers	miles	.621
square feet	square meters	.093	square centimeters	square inches	.155
square yards	square meters	.836	square meters	square feet	10.764
square miles	square kilometers	2.590	square meters	square yards	1.196
acres	square hectometers	.405	square kilometers	square miles	.386
cubic feet	cubic meters	.028	square hectometers	acres	2.471
cubic yards	cubic meters	.765	cubic meters	cubic feet	35.315
fluid ounces	milliliters	29,573	cubic meters	cubic yards	1.308
pints	liters	.473	milliliters	fluid ounces	.034
quarts	liters	.946	liters	pints	2.113
gallons	liters	3.785	liters	quarts	1.057
ounces	grams	28.349	liters	gallons	.264
pounds	kilograms	.454	grams	ounces	.035
short tons	metric tons	.907	kilograms	pounds	2.205
pound-feet	newton-meters	1.356	metric tons	short tons	1.102
pound-inches	newton-meters	.11296			

Temperature (Exact)

°F	Fahrenheit temperature	5/9 (after subtracting 32)	Celsius temperature	°C

PIN: 074635-000