# TM 9-2350-311-34-1

## DIRECT SUPPORT AND GENERAL SUPPORT MAINTENANCE MANUAL FOR HULL, POWERPLANT, DRIVE CONTROLS, TRACKS, SUSPENSION, AND ASSOCIATED COMPONENTS

## HOWITZER, MEDIUM, SELF-PROPELLED, 155MM, Ml 09A2 (EIC: 3EZ) (NSN 2350-01-031-0586)

AND

## HOWITZER, MEDIUM, SELF-PROPELLED, 155 MM, Ml 09A3 (EIC: 3E2) (NSN 2350-01-031-8851)

AND

## HOWITZER, MEDIUM, SELF-PROPELLED, 155MM, Ml 09A4 (EIC: 3E8) (NSN 2350-01-277-5770)

AND

## HOWITZER, MEDIUM, SELF-PROPELLED, 155MM, Ml 09A5 (EIC: 3E7) (NSN 2350-01-281-1719)


| | |
|---|---|
| INTRODUCTION | 1-1 |
| GENERAL HULL MAINTENANCE | 2-1 |
| TROUBLESHOOTING | 3-1 |
| SEPARATION AND ASSEMBLY OF POWERPLANT COMPONENTS | 4-1 |
| FUEL AND AIR INTAKE SYSTEMS | 5-1 |
| COOLING SYSTEM | 6-1 |
| ELECTRICAL SYSTEM | 7-1 |
| FINAL DRIVE AND TRACK SUSPENSION | 8-1 |
| HULL-RELATED COMPONENTS | 9-1 |
| ENGINE AND BATTERY WINTERIZATION KIT | 10-1 |
| REFERENCES | A-1 |
| EXPENDABLE AND DURABLE ITEMS LIST | B-1 |
| TOOL IDENTIFICATION LIST | C-1 |
| ILLUSTRATED LIST OF MANUFACTURED ITEMS | D-1 |
| TORQUE LIMITS | E-1 |
| MANDATORY REPLACEMENT PARTS | F-1 |


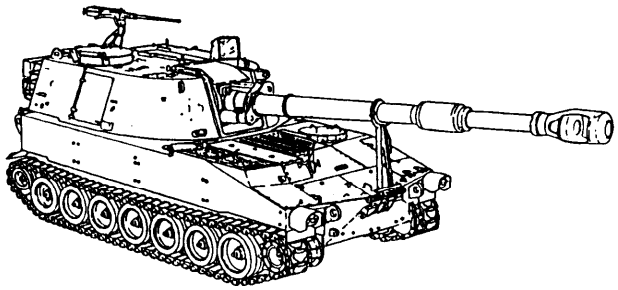


**This manual supersedes TM 9-2350 -311-34-1 dated 30 January 1987.**
**Approved for public release; distribution is unlimited.**

**HEADQUARTERS, DEPARTMENT OF THE ARMY**

**19 SEPTEMBER 1994**

## WARNING

RADIOACTIVE MATERIAL(S) TRITIUM (HYDROGEN-3) GAS

Handle with care. In the event the radioluminous source is broken, cracked, or there is no illumination, immediately wrap device in plastic bag (item 4, Appx B) and notify the local Radiation Protection Officer (RPO). Contact the base safety office for the name and telephone number of your local RPO:

LOCAL RPO: TELEPHONE:

SAFETY PROCEDURES FOR NUCLEAR REGULATORY COMMISSION (NRC) TRITIUM FIRE CONTROL DEVICES

1. Purpose: To implement mandatory license requirements for use and maintenance of tritium radioluminous fire control devices used on howitzers, mortars, tanks, and rifles.

2. Scope: This procedure is applicable to all personnel working with tritium devices, including unit, direct support, general support maintenance, and operator's levels.

3. Radiological hazard: The beta radiation emitted by tritium presents no external radiation hazard. However, if taken internally, it can damage soft tissue. If a capsule is broken, the tritium gas will dissipate into the surrounding air and surfaces near the vicinity of the break may become contaminated. Tritium can be taken into the body by inhalation, ingestion, or percutaneous (skin) absorption/injection

4. Safety precautions:

   a. Check for illumination prior to use or service in low light or darkroom. If not illuminated, do not repair. Wrap the entire device in plastic bag (item 4, Appx B) and notify the local RPO.

   b. No eating, drinking, or smoking will be allowed in tritium device work areas.

5. Emergency procedures: If a tritium source breaks, inform other personnel to vacate the area or move upwind. If skin contact is made with any area contaminated with tritium, wash immediately with nonabrasive soap and water. Report the incident to the local RPO. Actions below will be taken under supervision or direction of the local RPO.

   a. Personnel handling the device should wear rubber or latex gloves (item 8, Appx B). Device must be immediately double wrapped in plastic, sealed, packaged, and evacuated to depot. Outside package must be identified as "Broken Tritium Device -Do Not Open". Dispose of used gloves as radioactive waste, per instructions from local RPO and wash hands well.

   b. Personnel who may have handled the broken tritium should report to health clinic for tritium bioassay. Optimum bioassay sample is at least 4 hours after exposure.

   c. Broken tritium sources indoors may result in tritium contamination in the area, such as work bench or table. The area must be cordoned off, restricted until wipe tests indicate no contamination.

6. Further information:

a. Requirements for safe handling and maintenance are located in TM 9-254, General Maintenance Procedures for Fire Control Materiel.

b. If assistance is needed, contact your local or major command (MACOM) safety office(s) for information on safe handling, shipping, storage, maintenance, or disposal of radioactive devices.

c. The AMCCOM RPO/licensee may be contacted by calling: DSN 793-2965/2969/2995, Commercial (309) 782-2965/2969/2995. After duty hours contact the Staff Duty Office through the operator at DSN 793-6001, commericial (309) 782-6001. The following rules and regulations are available from HQ, AMCCOM, ATTN: AMSMC-SFS. Rock Island, IL 61299-6000. Copies maybe requested, or further information obtained by contacting the AMCCOM Radiation Protection Officer (RPO).

(1) 10 CFR Part 19-Notices, Instructions, and Reports to Workers

(2) 10 CFR Part 20-Standards for Protection Against Radiation

(3) NRC License, License Conditions, and License Application

**WARNING**

CARBON MONOXIDE HAZARD

Carbon monoxide is a colorless, odorless, deadly poisonous gas, which, when breathed, deprives the body of oxygen and causes suffocation. Exposure to carbon monoxide can produce headache, dizziness, loss of muscular control, drowsiness, and coma. Permanent brain damage or death can result from severe exposure.

Carbon monoxide occurs in the exhaust of fuel-burning heaters and internal-combustion engines and becomes dangerously concentrated under conditions of inadequate ventilation. The following precautions must be observed to ensure the safety of personnel whenever the personnel heater or main or auxiliary engine of any vehicle is operated for maintenance purposes or tactical use:

1. Do not operate heater or engine of vehicle in an enclosed area unless it is adequately ventilated.

2. Do not idle engine for long periods without maintaining adequate ventilation in personnel compartments.

3. Do not drive any vehicle with inspection plates, cover plates, or engine compartment doors removed unless necessary for maintenance purposes.

4. Be alert at all times during vehicle operation for exhaust odors and exposure symptoms. If either are present, immediately ventilate personnel compartments. If symptoms persist, remove affected personnel from vehicle and treat as follows: Expose to fresh air; keep warm; do not permit physical exercise; if necessary, administer artificial respiration. For detailed first aid instructions, consult FM 21-11.

THE BEST DEFENSE AGAINST CARBON MONOXIDE POISONING IS ADEQUATE VENTILATION.

## WARNING

PAINT HAZARD

Chemical Agent Resistant Coating (CARC) paint contains isocyanate, a constituent that can cause respiratory effects during and after the application of the material. During the application of CARC paint, coughing, shortness of breath, pain on respiration, increased sputum, and chest tightness may occur. CARC paint also produces itching and reddening of the skin, a burning sensation of the throat and nose, and watering of the eyes. An allergic reaction may occur after initial exposure (ranging from a few days to a few months later) producing asthmatic symptoms including coughing, wheezing, tightness in the chest, or shortness of breath. The following precautions must be obeserved to ensure the safety of personnel when CARC paint is applied:

- For spray/brush/roller painting in confined spaces, an airline respirator is required, unless an air sampling shows exposure to be below standards. If the air sampling is below standards, either the chemical cartridge or air line respirators are required.
- Spot painters applying CARC paint by brush or roller must wear clothing and gloves affording full coverage. Personnel using touchup spray kits should wear an air line respirator and protective clothing.
- Do not use water, alcohol, or amine-based solvents to thin or remove CARC paint. Use of these solvents with CARC paint can produce chemical reactions resulting in nausea, disease, bums, or severe illness.
- Do not use paint solvents to remove paint/coating from your skin.
- Mix paint/coating in a well-ventilated mixing room or spraying area away from open flames. Personnel mixing paint/coating should wear eye protection.
- Use paint/coating with adequate ventilation.
- Personnel grinding or sanding on painted equipment should use high-efficiency, air-purifying respirators.
- Do not weld, cut, or apply any form of heat to CARC-coated metal until the paint has been removed from a 4-in. (10.2-cm) area surrounding the rework site. Substances maybe released that cause skin or respiratory irritation if this is not done. Sand or grind the paint down to the base metal in the surrounding area and also remove any paint from the other side of the metal.
- When sanding any paint, use the wet sanding method. Older paints may contain lead, chromates, or other toxic material. Using wet or dry sandpaper, wet down the area before starting. Keep the sandpaper wet as you sand to keep down paint dust (FM 21-11).

## WARNING

MINERAL SPIRITS AND PAINT THINNER HAZARD

Do not use mineral spirits or paint thinner to clean the howitzer. Mineral spirits and paint thinners are highly toxic and combustible. Prolonged breathing can cause dizziness, nausea, and even death (FM 21-11).

## WARNING

DRY-CLEANING SOLVENT HAZARD

Dry=cleaning solvent (P-D-680) is toxic and flammable. Wear protective goggles and gloves and use only in a well-ventilated area. Avoid contact with skin, eyes, and clothes, and don't breathe vapors. Do not use near open flame or excessive heat. The flashpoint for type #1 is 100°F (38°C), and for type #2 is 138°F (59°C. If you become dizzy while using dry-cleaning solvent, get fresh air immediately and seek medical aid. If contact with eyes is made, wash your eyes with water and seek medical aid immediately (FM 21-1 1).

## WARNING

ADHESIVE HAZARD

Adhesives are toxic and flammable. Apply adhesives only in a well-ventilated area. Avoid contact with skin, eyes, and clothes, and do not breath vapors. Do not use near heat, sparks, or open flame. Read and follow all warnings and instructions on labels of adhesives. If contact with skin or eyes is made, wash area with water and seek medical aid immediately (FM 21-1 1).

## WARNING

NAPHTHA HAZARD

Naphtha is flammable. Do not smoke or allow open flames in areas where naphtha is being used to avoid possible explosion or injury (FM 21-1 1).

## WARNING

FIRE/FLAMMABLE HAZARD

- Diesel fuel and combustible materials are used in operation and maintenance of this equipment. Do not smoke or allow open flames or sparks in areas where diesel fuel and combustible materials are used or stored. Death or severe injury may result if personnel fail to observe this precaution. If you are burned, seek medical aid immediately.

- Do not place flammables or explosives on or near the personnel heater (FM 21-11).

## WARNING

COMPRESSED AIR HAZARD

Compressed air used for cleaning purposes must not exceed 30 psi (207 kPa). Use only with effective chip guarding and personal protective equipment (goggles/shield, gloves, etc) (FM 21-11).

## WARNING

ELECTRICAL HAZARD

Ensure MASTER switch is off when working on hull electrical system to prevent injury due to electrical shock (FM 21-1 1).

## WARNING

BATTERY HAZARD

- Batteries contain sulfuric acid that can cause severe bums. Avoid contact with skin, eyes, or clothing, and remove all metal or jewelry. If battery electrolyte is spilled, stop its burning effects immediately.
- When working on batteries, wear eye protection and remove all jewelry, dog tags, and metal items to avoid electrical shock and burns (FM 21-1 1).

## WARNING

NOISE HAZARD

Excessive noise levels are present any time the equipment is operating. Wear hearing protection while operating or working around equipment while it is running. Failure to do so could result in damage to your hearing. Seek medical aid should you suspect a hearing problem (FM 21-11).

## WARNING

HAZARDOUS WASTE

When servicing this vehicle, performing maintenance, or disposing of materials such as engine coolant, transmission fluid, lubricants, battery acids or batteries, and CARC paint, consult your unit/ local regulatory guidance. If further information is needed, please contact the U.S. Army Environmental Hotline at 1-800-872-3845.

**WARNING**

ROTATION HAZARD

Protective fan screens must be installed prior to performing maintenance in the engine compartment when the engine is running or in ground hop mode. Contact with rotating fan can cause injury (FM 21-1 1).

**WARNING**

CRAWLING UNDER EQUIPMENT HAZARD

Never crawl under equipment when performing maintenance unless the equipment is securely blocked. Keep clear of the equipment when it is being raised or lowered. Do not allow heavy components to swing while suspended by a lifting device. Exercise extreme caution when working near a cable under tension. In case of injury, seek medical aid immediately (FM 21-1 1).

**WARNING**

FALLING EQUIPMENT/ROLLING VEHICLE HAZARD

Unless otherwise specified, perform all maintenance procedures with all equipment lowered to the ground, transmission in neutral, parking/emergency brake applied, and engine stopped to prevent possible injury due to falling equipment or rolling vehicle (FM 21-11).

**WARNING**

PARKING HAZARD

Do not park vehicles head-to-head. Injury to personnel or damage to the vehicles could occur if one vehicle jumps (FM 21-1 1).

TECHNICAL MANUAL
NO. 9-2350-311 -34-1

HEADQUARTERS
DEPARTMENT OF THE ARMY
Washington D. C., 19 September 1994

# DIRECT SUPPORT AND GENERAL SUPPORT MAINTENANCE MANUAL FOR HULL, POWERPLANT, DRIVE CONTROLS, TRACKS, SUSPENSION, AND ASSOCIATED COMPONENTS

HOWITZER, MEDIUM,
SELF-PROPELLED, 155MM, M109A2(EIC: 3EZ)
(NSN 2350-01-031 -0586)
AND
HOWITZER, MEDIUM,
SELF-PROPELLED, 155MM, M109A3 (EIC: 3E2)
(NSN 2350-01-031 -8851)
AND
HOWITZER, MEDIUM,
SELF-PROPELLED, 155MM, M109A4 (EIC: 3E8)
(NSN 2350-01 -277-5770)
AND
HOWITZER, MEDIUM,
SELF-PROPELLED, 155MM, M109A5 (EIC: 3E7)
(NSN 2350-01-281-1719)

REPORTING ERRORS AND RECOMMENDING IMPROVEMENTS

You can help improve this manual. If you find any mistakes or if you know of a way to improve the procedures, please let us know. Mail your letter, DA Form 2028 (Recommended Changes to Publications and Blank Forms), or DA Form 2028-2 located in the back of this manual direct to Commander, U.S. Army Tank-automotive and Armaments Command, ATTN: AMSTA-MMAA, Warren, Ml 48397-5000. A reply will be furnished to you.

You may also provide DA Form 2028-2 information to TACOM via datafax or e-mail:
- TACOM's fax number is DSN 786-6323
- TACOM's e-mail address is amsta-mmaa@cc.tacom, army.mil

DISTRIBUTION STATEMENT A: Approved for public release; distribution is unlimited.

## TABLE OF CONTENTS

CONTENTS PAGE

CHAPTER 1 — INTRODUCTION . . . . . ...1-1]

Section I GENERAL INFORMATION . . . . . ...1-5
Section II EQUIPMENT DESCRIPTION AND DATA . . . . . ...1-8
Section Ill PRINCIPLES OF OPERATION . . . . . ...1-17

CONTENTS PAGE

[CHAPTER 2-GENERAL HULL MAINTENANCE.. . . . . ...2-1]

Section I REPAIR PARTS, SPECIAL TOOLS, TMDE, AND SUPPORT EQUIPMENT. . . . . ...2-2
Section II GENERAL HULL MAINTENANCE INSTRUCTIONS . . . . . ...2-2
Section Ill CLEANING, PAINTING, AND LUBRICATION. . . . . ...2-5

[CHAPTER 3-TROUBLESHOOTING . . . . . ..3-1

CHAPTER 4 — SEPARATION AND ASSEMBLY OF POWERPLANT COMPONENTS . . . . . .4-1

CHAPTER 5-FUEL AND AIR INTAKE SYSTEMS . . . . . ..5-1

CHAPTER 6-COOLING SYSTEM . . . . . ...6-1]

Section I UNIVERSAL JOINTS AND COOLING FAN DRIVE . . . . . ...6-2
Section II RADIATOR SHROUD AND VANEAXIAL COOLING FAN ASSEMBLY . . . . . ...6-11

CHAPTER 7-ELECTRICAL SYSTEM. . . . . ..7-1

Section I POWERPLANT AND HULL WIRING HARNESSES. . . . . ...7-2
Section II HULL ELECTRICAL COMPONENTS . . . . . ...7-78

CHAPTER 8-FINAL DRIVE AND TRACK SUSPENSION . . . . . ...8-11

Section I FINAL DRIVE ASSEMBLY . . . . . ...8-2
Section II TRACK SUSPENSION . . . . . ...8-6

[CHAPTER 9-HULL-RELATED COMPONENTS . . . . . ...9-11

I CHAPTER 10- ENGINE AND BATTERY WINTERIZATION KIT . . . . . ...10-1]

Section I WINTERIZATION KIT INSTALLATION.. . . . . ...10-2
Section II WINTERIZATION KIT COMPONENTS . . . . . ...10-24

APPENDIX A-REFERENCES . . . . . A-1

APPENDIX B- EXPENDABLE AND DURABLE ITEMS LIST . . . . . B-1

Section I INTRODUCTION . . . . . B-2
Section II EXPENDABLE AND DURABLE ITEMS LIST . . . . . B-3

APPENDIX C-TOOL IDENTIFICATION Last . . . . . C-1

APPENDIX D-ILLUSTRATED LIST OF MANUFACTURED ITEMS . . . . . D-1

CONTENTS PAGE

APPENDIX E-TORQUE LIMITS. . . . . .. O . . . . . E-1

APPENDIX F-MANDATORY Replacement mm... . . . . F-1

INDEX . . . . . 0 . ..0..0.09 . . . . . INDEX-1 I

FOLDOUTS . . . . . FP-1

# HOW TO USE THIS MANUAL

## GENERAL

This manual contains direct support and general support maintenance instructions for the M109A2/M109A3/M109A4/ Ml 09A5 Howitzers' hull and hull-related components.

The front matter in this manual consists of **a** cover index, general warnings, and a table of contents.

This manua is divided into 10 chapters **and** 6 appendixes. Each chapter and appendix begins on a right page with the page number of 1. Pages are numbered after the chapter number or appendix letter For example 1-14 means Chapter 1, page 14, and A-2 means Appendix A, page 2.

At the end of this manual are an alphabetical index, eight schematics, DA Form 2028-2, and a metric conversion chart.

### a. Front Matter

The front cover has an index for the major divisions in this manual The first page of the associated major division has a black edge that lines up with the applicable cover boxed-in area.

There are general warnings that start on the first right page immediately after the cover that should be read before performing any maintenance on the howitzer.

The table of contents indicates the page where each chapter, section, appendix, and paragraph starts.

### b. Chapters

Chapter 1 provides general information, equipment description, and principles of operation of the howitzer.

Chapter 2 provides maintenance instructions for the hull

Chapter 3 provides direct support and general support troubleshooting procedures for the howitzer.

Chapter 4 provides direct support and general. support maintenance instructions for separating and assembling the powerplant components.

Chapter 5 provides direct support and general support maintenance instructions for the fuel and air intake systems.

Chapter 6 provides direct support and general support maintenance instructions for the cooling system.

Chapter 7 provides direct support and general support maintenance instructions for the electrical system.

Chapter 8 provides direct support and general support maintenance instructions for the final drive and track suspension.

Chapter 9 provides direct support and general support maintenance instructions for hull-related components.

Chapter 10 provides direct support and general support maintenance instructions for the engine and battery winterization kit.

**c. Appendixes**

Appendix A provides titles of documents and publications referenced throughout this manual.

Appendix B provides a list of the expendable and durable items necessary to perform the direct support and general support maintenance procedures.

Appendix C provides a tool identification list of common tools necessary to perform the direct support and general support maintenance procedures.

Appendix D provides an illustrated list of manufactured items.

Appendix E provides wet torque limits for screws and fastener information.

Appendix F provides a list of the mandatory replacement parts necessary to perform the direct support and general support maintenance procedures.

**d. Alphabetical Index**

The alphabetical index is located after the last appendix and provides an alphabetical listing of information contained in this manual.

**e. Schematics**

There are eight electrical schematics in foldout form located at the end of this manual.

**f. DA Form 2028-2**

DA Form 2028-2 is used to report errors and to recommend improvements for the tasks in this manual.

**g. Metric Conversion Chart**

The metric conversion chart converts English measurements to metric equivalents. Measurements in this manual are provided in both English and metric units.

## WARNINGS, CAUTIONS, AND NOTES

Warnings, cautions, and notes are provided throughout this manual:

Warnings are provided where injury may occur to personnel on or near the howitzer.

Cautions are provided where equipment may be damaged, but no injuries to personnel should result.

Notes provide information, but no personnel injury or equipment damage should result.

## INITIAL SETUPS

Before starting a task, you must obtain all the tools, supplies, and personnel listed in the initial setup. Be sure to read the task before performing the maintenance. If any other tasks are referenced, you must go to the initial setup page for each of those tasks to find out what tools, supplies, and personnel will be needed.

## LOCATIONAL TERMS

The terms “front,” “rear,” “left,” and “right” are used to indicate where items are located on the howitzer. These locations are from the viewpoint of standing behind the howitzer and facing it.

## REFERENCING

In this manual, internal referencing is done by chapter, appendix, paragraph, section, or task. For example, (para 8-15) refers you to Chapter 8, paragraph 15.

Referencing outside this manual is done by the military document or publication number. For example, (TM 9-2350-311-10) refers you to that manual.

## LOCATING INFORMATION

This manual provides five ways by which you can locate information quickly:

The cover index lists most frequently used major divisions by name and starting page number.

The table of contents.

The chapter and appendixes indexes list data and information covered within those chapters.

The malfunction index (Chapter 3) provides a quick guide to troubleshooting malfunctions.

The alphabetical index provides an alphabetical listing of information contained in this manual.

# CHAPTER 1
# INTRODUCTION

## GENERAL

This chapter provides information to familiarize the mechanic with the Ml 09A2/M1 09A3/M1 09A4/M1 09A5 Medium, Self-Propelled Howitzer's hull, powerplant, drive controls, tracks, suspension, and other hull-related components. This information is provided through a physical description of the major components, which the technician is required to maintain, service, inspect, replace, or repair.

Additional information is provided as reference and guidance on the use of forms, maintenance of records, and filing reports.

CONTENTS


| | | PAGE |
|---|---|---|
| Section 1 | GENERAL INFORMATION | 1-5 |
| 1-1 | SCOPE | 1-5 |
| 1-2 | MAINTENANCE FORMS, RECORDS, AND REPORTS | 1-5 |
| 1-3 | DESTRUCTION OF ARMY MATERIEL TO PREVENT ENEMY USE | 1-5 |
| 1-4 | PREPARATION FOR SHIPMENT AND STORAGE | 1-6 |
| 1-5 | QUALITY ASSURANCE (QA) | 1-6 |
| 1-6 | OFFICIAL NOMENCLATURE, NAMES, AND DESIGNATIONS | 1-6 |
| 1-7 | REPORTING EQUIPMENT IMPROVEMENT RECOMMENDATIONS (EIRS) | 1-6 |
| 1-8 | WARRANTY INFORMATION | 1-7 |
| 1-9 | SAFETY, CARE, AND HANDLING | 1-7 |
| 1-10 | CORROSION PREVENTION AND CONTROL (CPC) | 1-8 |
| Section II | EQUIPMENT DESCRIPTION AND DATA | 1-8 |
| 1-11 | CAPABILITIES AND FEATURES | 1-8 |
| 1-12 | LOCATION OF MAJOR COMPONENTS | 1-10 |
| 1-13 | DIFFERENCES BETWEEN MODELS | 1-14 |
| 1-14 | EQUIPMENT DATA | 1-15 |
| Section Ill | PRINCIPLES OF OPERATION | 1-17 |
| 1-15 | EQUIPMENT OPERATION AND DESCRIPTION | 1-17 |

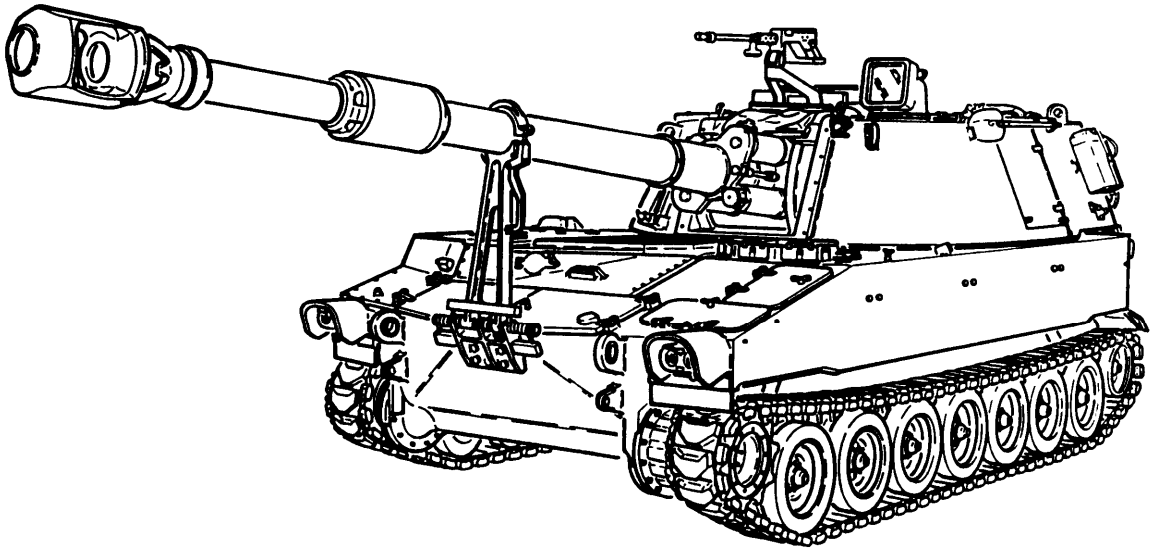

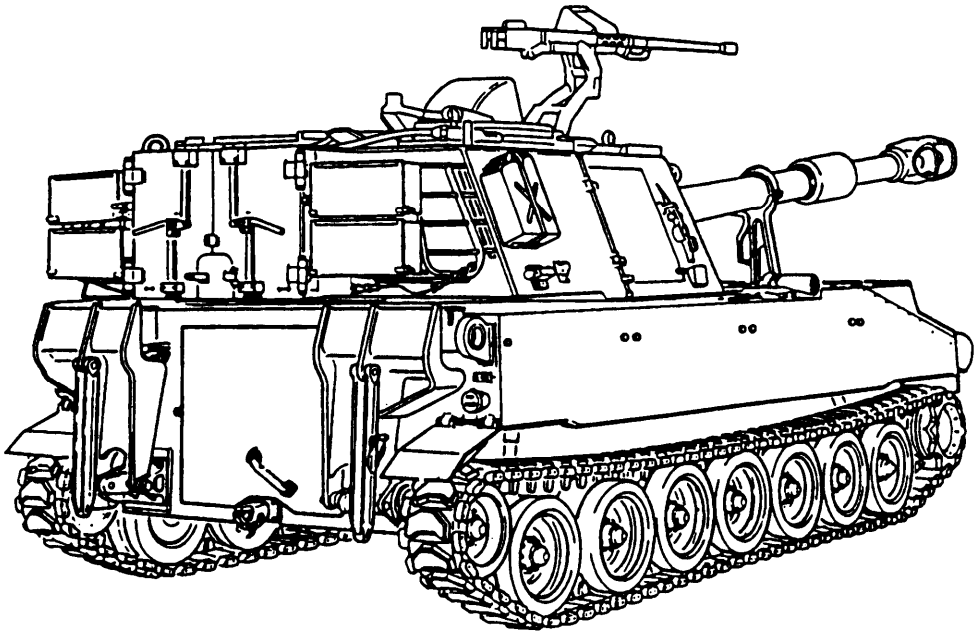

M109A2

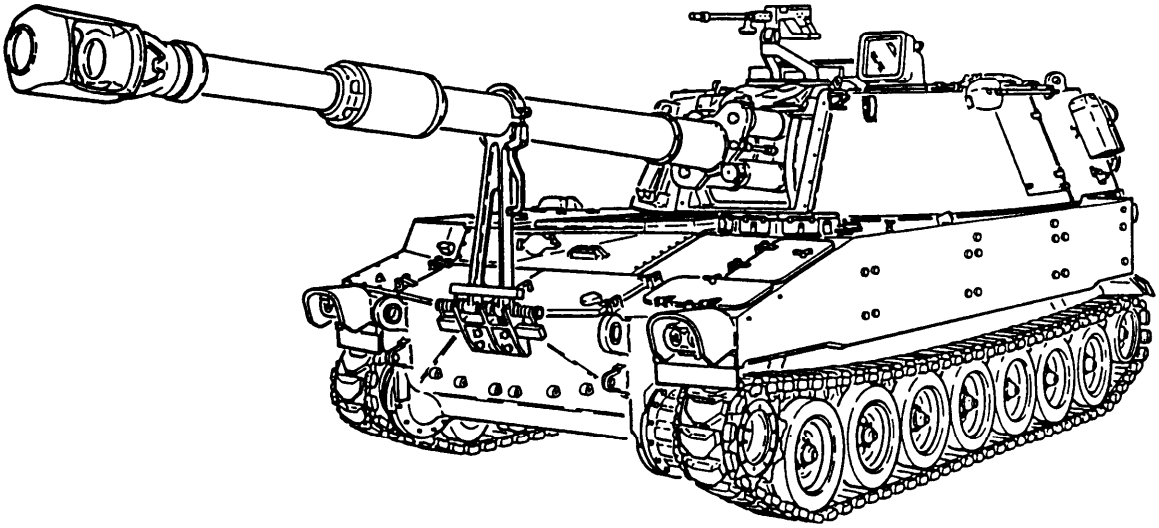

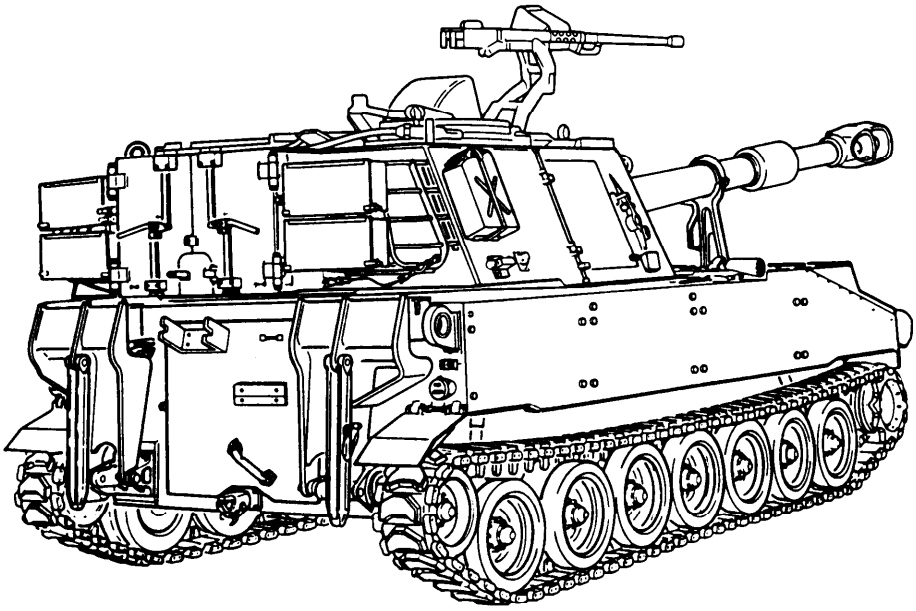

M109A3

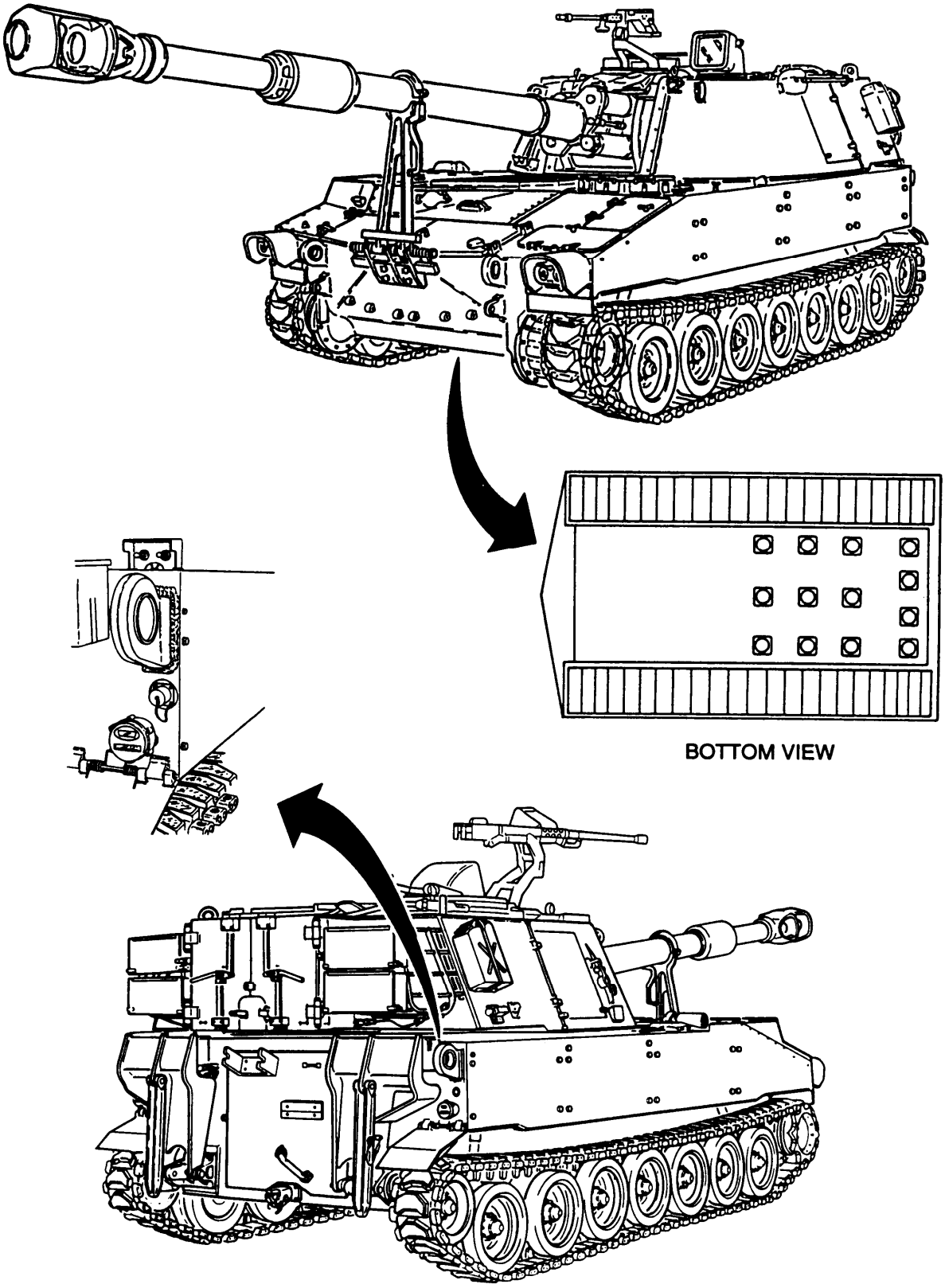


M109A4/M109A5

# SECTION 1. GENERAL INFORMATION

## 1-1 SCOPE

This manual contains instructions for direct support and general support maintenance of the Ml 09A2/M109A3/M1 09A4/ Ml 09A5 Howitzer's hull, powerplant, drive controls, tracks, suspension, and other hull-related components.

## 1-2 MAINTENANCE FORMS, RECORDS, AND REPORTS

Department of the Army forms and procedures used for equipment maintenance will be those prescribed by (as applicable) DA PAM 738-750, The Army Maintenance Management System (TAMMS); DA PAM 738-751, Functional Users Manual for The Army Maintenance Management System — Aviation (TAMMS-A); or AR 700-138, Army Logistics Readiness and Sustainability.

Accidents involving injury to personnel or damage to materiel will be reported on DA Form 285, US Army Accident Investigation Report, in accordance with AR 385-40. Explosive ammunition malfunctions will be reported in accordance with AR 75-1.

## 1-3 DESTRUCTION OF ARMY MATERIEL TO PREVENT ENEMY USE

Destruction of the vehicle, armament, and equipment, when subject to capture or abandonment in a combat zone, will be undertaken by the using army only when the unit commander decides such action is necessary in accordance with orders of, or policy established by, the Army commander.

Read TM 750-244-6, Procedures for Destruction of Tank-Automotive Equipment to Prevent Enemy Use, for information on destruction of all mechanical equipment. In general, destruction of essential components, followed by burning, will usually be sufficient to render the vehicle, armament, and equipment useless. Time is usually critical.

Materiel must be damaged so that it cannot be restored to usable condition by either repair or cannibalization. If a lack of time or personnel prevents destruction of all parts, give priority to destruction of parts hardest to replace. It is important that the same parts be destroyed on all vehicles to prevent construction of one complete vehicle from several damaged ones.

All items of sighting and fire control instruments and equipment, especially telescopes, gunner's quadrants, and ' binoculars, are costly and difficult to replace. They should be conserved whenever possible. If you cannot carry them with you, destroy them by smashing with your sledgehammer, pick, or mattock. Throw the pieces in all directions.

When time is short, a method of destroying the equipment with materials at hand is as follows:

- Retrieve or smash the sighting and fire control equipment.
- Load the cannon with a projectile and a full powder charge. Attach a 50-ft (15.24-m) or longer lanyard to the firing mechanism. Disconnect all recoil cylinders and fire the weapon.
- Take a sledgehammer and bend the end of the recoil system rods.

## 1-3 DESTRUCTION OF ARMY MATERIEL TO PREVENT ENEMY USE — CONTINUED

A second method is to close the breechblock, elevate the tube, and toss several thermite grenades down the tube. Elevate the tube so that the grenades will fall against the breechblock. This will melt the breech and the powder chamber, causing them to fuse together.

## 1-4 PREPARATION FOR STORAGE AND SHIPMENT

Basic requirements for administrative storage are covered in TM 9-2350-311-20-2.

## 1-5 QUALITY ASSURANCE (QA)

Not applicable.

## 1-6 OFFICIAL NOMENCLATURE, NAMES, AND DESIGNATIONS

Nomenclature in this manual was chosen in accordance with the terms used for provisioning as they appear in the Repair Parts and Special Tools List (RPSTL) and Maintenance Allocation Chart (MAC). A few tools and hull components are, however, referred to by names more common than those in the RPSTL. In many cases the more common name is a shorter name for the same component.

| OFFICIAL PROVISIONING NOMENCLATURE | MORE COMMON NAME |
|---|---|
| Ammunition rack | Ammo rack |
| Cable assembly | Wiring harness |
| Gage rod | Dipstick |
| Intercommunications power harness | Intercom wiring harness |
| Intercommunications system | Intercom system |
| 155mm, medium, self-propelled howitzer | Howitzer |
| Safety wire or nonelectrical wire | Lockwire |

## 1-7 REPORTING EQUIPMENT IMPROVEMENT RECOMMENDATIONS (EIRs)

If your howitzer needs improvement, let us know. Send us an EIR. You, the user, are the only one who can tell us what you don't like about your equipment. Let us know why you don't like the design or performance. Put it on an SF 368, Product Quality Deficiency Report. Mail it to the address specified in DA PAM 738-750.

**NOTE**

When equipment failure occurs, but is not caused by normal wear, poor operation, or accidental damage, an EIR must be submitted.

## 1-8 WARRANTY INFORMATION

The Ml 09 Howitzer series is no longer warranted.

## 1-9 SAFETY, CARE, AND HANDLING

**WARNING**

Nuclear, Biological, and Chemical (NBC) agents can kill you. If NBC exposure is suspected, all air filter media must be handled by personnel wearing full NBC-protective equipment (FM 21-1 1).

**WARNING**

Ml 40 alinement device and Al Al collimator are illuminated by sealed, radioactive sources of tritium gas ($H_3$). As long as these sources remain sealed, they do not emit any harmful radiation. There is no limit on handling time. Radioactively illuminated collimators are indicated by the radioactive sign shown above. If the seal is broken, see below.

a. Refer to warning page inside front cover of manual.

b. Prior to purging or charging, make the following checks:

(1) Lift cover assembly and check for cracks or loss of illumination.

(2) Look through objective end of collimator and check for broken/cracked reticle and loss of illumination. If reticle is intact, no cracks are observed, and collimator is illuminated, proceed with maintenance actions.

(3) If cracks are observed, but collimator is still illuminated, remove collimator scope and notify the local Radiation Protection Officer (RPO). Seal collimator scope in a double plastic bag (item 4, Appx B) and return it to depot for disposal.

(4) If no illumination is observed, remove collimator scope and check for illumination in a dark room. If a slight glow/haze appears, follow procedure in paragraph (3) above. If illumination still is not detected, notify local RPO. Return collimator scope to depot as follows for disposal.

(a) Seal collimator scope in a double plastic bag (item 4, Appx B) and place in a strong, tight container (such as a fiberboard box) (item 5, Appx B) with all seams secured using tape (item 26, Appx B) (masking tape is not authorized).

(b) Label the container: CAUTION — BROKEN $H_3$ SOURCE. DO NOT OPEN.

## 1-10 CORROSION PREVENTION AND CONTROL (CPC)

CPC of Army materiel is a continuing concern. It is important that any corrosion problems with this item be reported so that the problem can be corrected and improvements can be made to prevent the problem in future items. While corrosion is typically associated with rusting of metals, it can also\ include deterioration of other materials, such as rubber and plastic. Unusual cracking, softening, swelling, or breaking of these materials maybe a corrosion problem. if a corrosion problem is identified, it can be reported using SF 368, Product Quality Deficiency Report.

Use of keywords such as “corrosion,“ “rust,” “deterioration,” or “cracking” will ensure that the information is identified as a CPC problem. The form should be submitted to the address specified in DA PAM 738-750.

## SECTION II. EQUIPMENT DESCRIPTION AND DATA

## 1-11 CAPABILITIES AND FEATURES

**NOTE**

Refer to TM 9-2350-311-10 for further equipment descriptions and data.

### 1-11.1 Electrical System

The howitzers’ electrical power is provided through a 24-Vdc (nominal) generating system consisting of the following components:

a. Four 12-Vdc (nominal) batteries connected in series/paralle that provide 24 Vdc (nominal) to the master relay.

b. M109A2/M1 09A3 Howitzers have a 3-phase, 100-amp alternator that maintains 24-Vdc (nominal) electrical power through the voltage rectifier, voltage regulator, and to the master relay for systems operation. Ml 09A4/ Ml 09A5 Howitzers have a 3-phase, 180-amp alternator.

c. Master relay that delivers electrical power to electrically operated systems/equipment in the howitzers (hull and cab) by turning on the MASTER switch. The MASTER switch, located on the driver’s portable instrument panel, actuates the vehicles’ electrical system. With the powerplant off (engine not running), activation of the MASTER switch provides delivery of electrical power direct through the alternator, voltage rectifier, voltage regulator, and master relay circuit.

### 1-11.2 Powerplant (Engine and Transmission)

The powerplant (engine and transmission) provides the mobility for the howitzers.

The powerplant consists of the following subsystems:

a. Two engines are available:

. Detroit Diesel 8V71T, model 7083-7398, diesel, liquid-cooled, V-8 engine, which generates 405 horsepower at 2300 rpm.

. Detroit Diesel 8V71T, model 7083-7391, diesel, liquid-cooled, V-8 engine, which generates 440 horsepower at 2300 rpm.

Drive control linkages to the transmission are steer control, shift control, and braking. Final drive assemblies are the interface between the transmission and drive sprockets.

**1-11.3 Suspension**

Independent, torsion-bar mounted, dual-sided road wheels (seven per side), which support and guide the vehicle track.

1-11.4 **Air Cleaner Assembly**

Provides filtered air to the engine air intake system.

# 1-12 LOCATION OF MAJOR COMPONENTS

## 1-12.1 Location of Major Component

**NOTE**

Primary fuel filter on some vehicles is located inside engine compartment access door.

LEGEND

1 External power receptacle (M109A4/M109A5)
2 Combat override switch (M109A4/M109A5)
3 Accessory control box
4 Cannoneer no. 2 heater (M109A4/M109A5)
5 Turbocharger
6 Driver's seat
7 Driver's and portable instrument panels
8 Drive control
9 Driver's heater (Ml 09A4/M109A5)
10 Batteries (4)
11 Air purifier (M109A4/M109A5)
12 Rectifier
13 Master relay
14 Voltage regulator
15 Starter relay
16 Bilge pump relay
17 Secondary fuel filter
18 Oil filters (engine)
19 Primary fuel filter
20 Transmission
21 Coolant surge tank
22 Fuel tanks and pumps
23 Bilge pump
24 Engine
25 Radiator
26 Alternator
27 Fan assembly
28 Air cleaner
29 Personnel heater
30 Fixed fire extinguisher

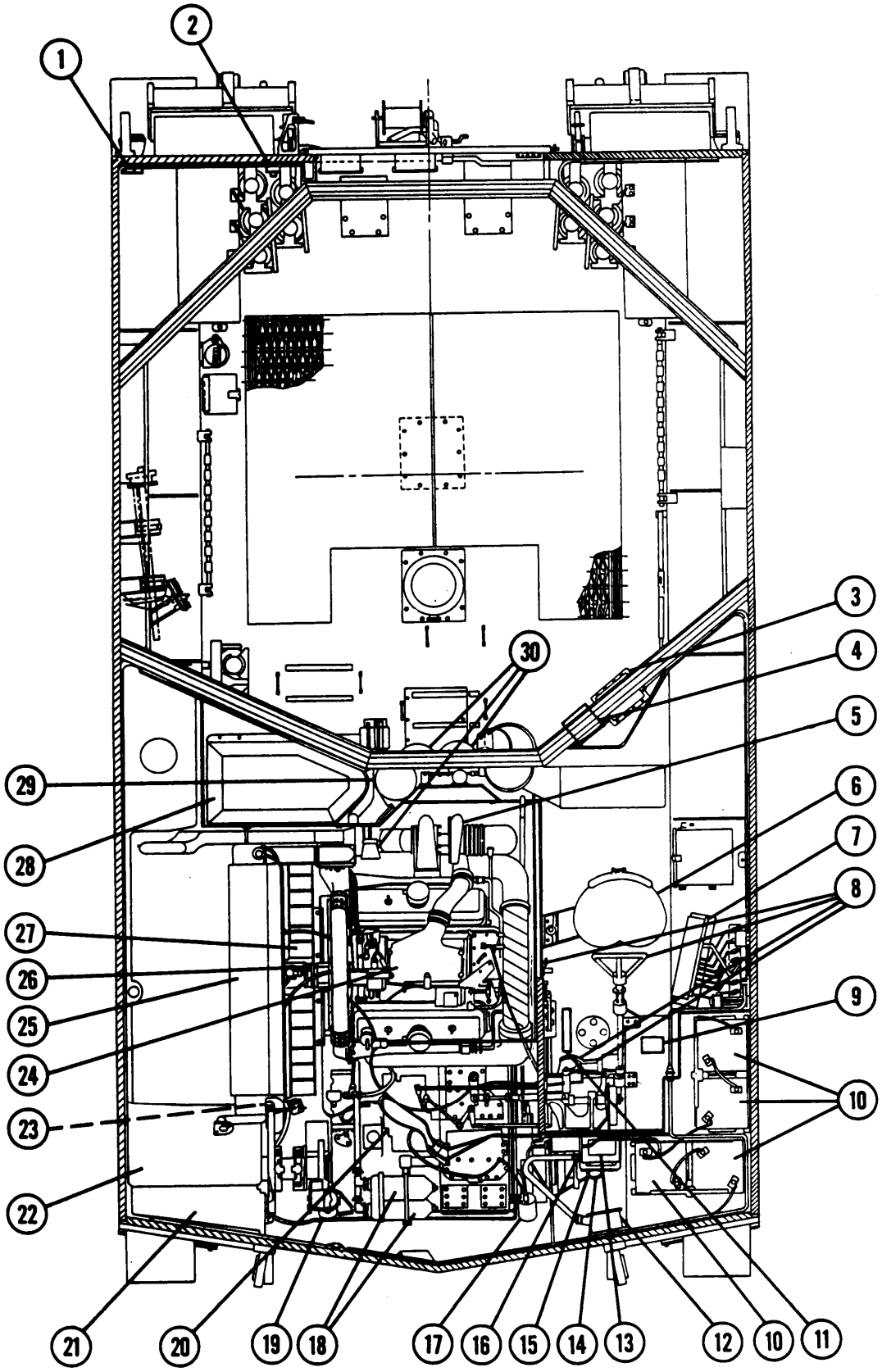
1
2
3
4
5
6
7
8
9
10
10
11
12
13
14
15
16
17
18
19
20
21
22
23
24
25
26
27
28
29
30

## 1-12 LOCATION OF MAJOR COMPONENTS — CONTINUED

### 1.12.2 Stencil Locations for Basic Issue Items (Bll)

LEGEND

1 Powder cans
2 Fuses
3 Projectile stowage
4 M14 aiming light
5 Bucket
6 M712 (or powder can stowage)
7 Projectile spacer
8 Portable fire extinguisher
9 Canteen
10 Rations (exterior)
11 Telephone
12 Rifles
13 Span periscope (M45)
14 Flashlight

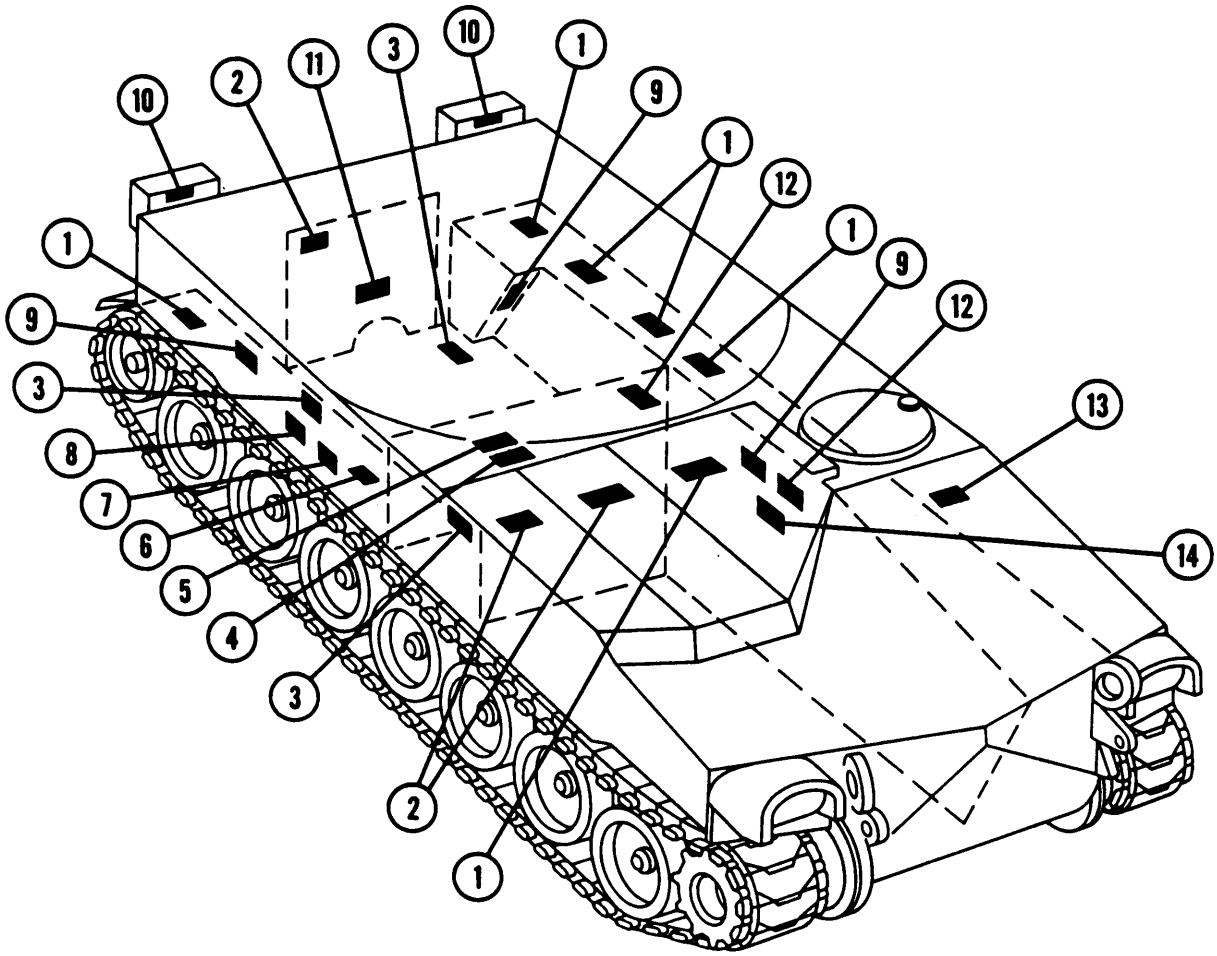

### 1.12.2 Serial Number Locations

**NOTE**

- The M109A2, M109A3, M109A4, and M109A5 Howitzers have similar data plates.
- Engine serial number and model are stamped on the right upper front comer of the cylinder block.

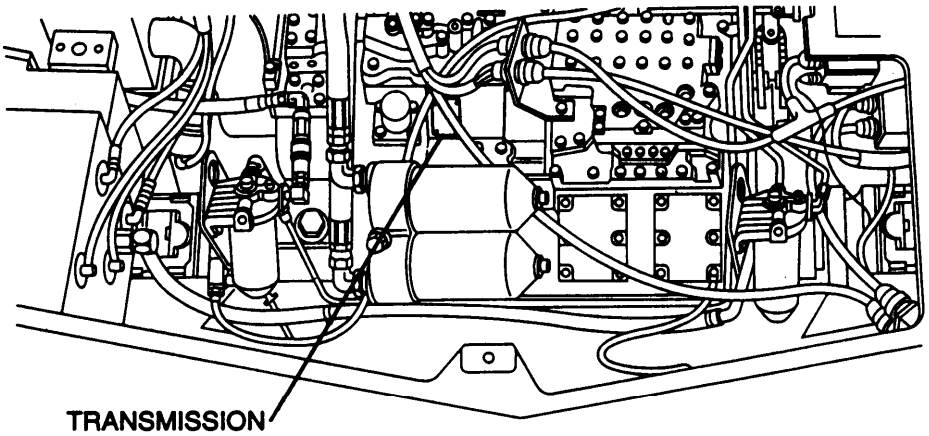


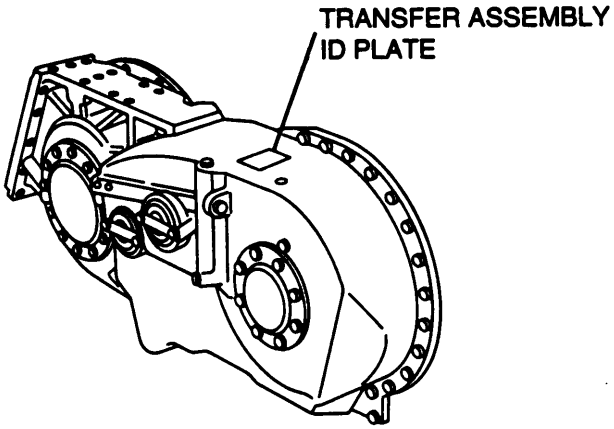


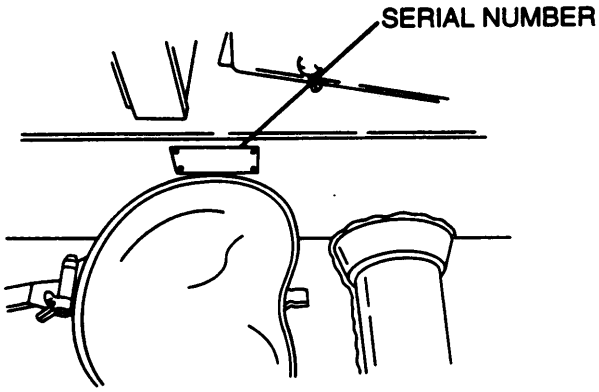


VEHICLE — ON VEHICLE DATA PLATE
LEFT OF DRIVER'S SEAT

HOWITZER, MEDIUM, SELF-PROPELLED: 155MM, M109A2
CREW 6 MEN
U.S. ARMY SERIAL NO. [redacted]

MFD BY: [redacted]
OPERATOR'S MANUAL: TM9-2350-311-10
MAINT. MANUALS: LO9-2350-311-12, TM9-2350-311-20-1, -20-2, -20P-2, -24P-1, -34-1, -34-2, -34P-2

MAX VEHICLE SPEEDS
LOW: 6 MPH HIGH: 35 MPH REVERSE: 7 MPH

OVERALL LENGTH: 357 LOWEST OPERABLE HEIGHT: 114
OVERALL WIDTH: 124 SHIPPING VOLUME: 2573 FT 3
OVERALL HEIGHT: 129 FIGHTING WEIGHT: 27.5 TONS

[redacted] NATIONAL STOCK NO.: 2350-01-031-0586

[redacted]

## 1-13 DIFFERENCES BETWEEN MODELS

Differences between models exist (1) when comparing the M109A2 and Ml 09A3 Howitzers; (2) when comparing one M109A3 to another M109A3 Howitzer and (3) when comparing the M109A2/M109A3 and M1094/M1 09A5 Howitzers.

### 1-13.1 Hull Rear Doors

The hull rear doors differ among the howitzers. Earlier versions have double doors and later versions have single doors. All Ml 09A2 Howitzers have single doors.

### 1-13.2 Personnel Heater Exhaust Deflector

There is no personnel heater exhaust deflector on earlier howitzers. All newer howitzers and all M109A2 Howitzers have the personnel heater exhaust deflectors mounted on the exhaust grille.

### 1-13.3 NATO Slave Start Receptacle

At present, not all of the M109 Howitzers have NATO slave start receptacles. Also, the slave start receptacle location differs between the M109A2/M109A3 and M109A4/M109A5 Howitzers. The M109A2/M109A3 NATO slave start receptacle is located in the battery compartment. The Ml 09A4/M1 09A5 NATO slave start receptacle is located in the driver's compartment.

### 1-13.4 Primary Fuel Filters

the primary fuel filters are located in different areas of the engine compartment. Some older howitzers' primary fuel filters are positioned near the engine vibration damper and the engine oil pan. The later howitzers' primary fuel filters are positioned near the oil filters attached to the transmission (vehicle front).

### 1-13.5 Travel Locks

There are some travel lock differences involving the spring anchors. Differences are minor and are detailed in TM 9-2350-311-20-1.

### 1-13.6 Ventilated Face Piece System (VFPS)

M109A4/M109A5 Howitzer hulls have a VFPS consisting of two air heaters, an air purifier, and required hoses.

### 1-13.7 Telephone Terminals

The location of vehicle telephone terminals differ on M109A2/M109A3 and M109A4/M109A5 Howitzers. The M109A2/M109A3 terminals are located on the hull rear bulkhead. M109A4/M109A5 terminals are located on the hull rear roof (exterior).

### 1-13.8 External Power Receptacle

M109A4/M109A5 Howitzers have external power receptacles located on the rear hull bulkhead.

### 1-13.9 Alternator and Charging System

M109A2/M109A3 Howitzers have 100-amp alternators/rectifiers. M109A4/M109A5 Howitzers have 180-amp alternators/rect ifiers. The location for both configurations is the same.

### 1-13.10 Crew Compartment Subfloor Drains

**M109A4/M1 09A5** Howitzers have 13 subfloor drains installed.

## 1-14 EQUIPMENT DATA

### 1-14.1 General

| | |
|---|---|
| crew | 6 |
| Weight (combat loaded) | 55,000 lb (24,948 kg) |
| Weight (less crew, fuel, and stowage) | 52,000 lb (23,587 kg) |
| Length (Ml 09A2/M109A3/M109A4) (with armament) | 359.375 in. (9.13 m) |
| Length (Ml 09A5) (with armament) | 3 in. (9.17 m) |
| Length (without armament) | 243.75 in. (6.19 m) |
| Width | 124 in. (3.15 m) |
| Height | 120.43 in. (3.06 m) |
| Lowest operable height | 109.93 in. (2.79 m) |
| Ground clearance | 18 in. (45.7 cm) |
| Shipping volume | 2250 cu ft (63.72 cu m) |
| Bridge classification | 26 tons (23,587 kg) |

### 1-14.2 Performance

| | |
|---|---|
| High speed (max) | 35 mph (56 km/h) (governed) |
| Low speed (max) | 6 mph (10 km/h) |
| Reverse speed (max) | 7 mph (11 km/h) |
| Max grade | 60% |
| Max trench | 72 in. (1.83 m) |
| Max vertical wall | 21 in. (53.3 cm) |
| Turn radius (min) | 1 vehicle length |
| Cruising range | 217 miles (349 km) |
| Fuel capacity | 135 gal (51 1 L) |

### 1-14.3 Engine

| | |
|---|---|
| Type/model | Detroit Diesel 8V71T, model 7083-7396 or 7083-7391, liquid-cooled |
| Manufacturer | Detroit Diesel Corp (Division of GMC) |
| Horsepower (gross) at 2300 rpm | 405 (engine model 7083-7396), 440 (engine model 7083-7391 ) |
| Horsepower (net) | 345 at 2300 rpm |
| Displacement | 568 cu in. (9308 cc) |
| Bore | 4.25 in. (10.8 cm) |
| Stroke | 5.0 in. (12.7 cm) |
| Compression ratio | 17:1 |
| Torque (max gross) | 980 lb-ft (1 329 N•m) at 1700 rpm |
| Toque (max net) | 895 lb-ft (1 213 N•m) at 1600 rpm |
| Ignition | Compression |

## 1-14 EQUIPMENT DATA — CONTINUED

### 1-14.3 Engine — Continued

**NOTE**

Under emergency conditions and in military operations involving jet transportation, JP-5 aircraft turbine engine fuel may be used instead of VV-F-800.

| | |
|---|---|
| Fuel oil | Diesel: 40 cetane, VV-F-800 |
| Regular grade (DF-2) (NATO F-54) temperature range | 20 to 115°F (-7 to 46°C) |
| Winter grade (DF-1) temperature range | -20 to 20°F (-29 to 7°C) |
| Arctic grade (DF-A) temperature range | -65 to -25°F (-54 to -32°C) |
| Fuel acceptance (safe max) | 50 gpm (3.2 L/s) |
| Lubrication oil system capacity (refill) | 28 qt (26.5 L) (approx) |
| Lubrication oil system capacity (dry) | 38 qt (36.0 L) (approx) |
| Cooling system capacity (refill) | 56 qt (53 L) |
| Cooling system capacity (dry) | 88 qt (83 L) |

### 1-14.4 Transmission

| | | |
|---|---|---|
| Model | XTG-411-2A or XTG-411-4A | |
| Manufacturer | Allison Transmission (Division of GMC) | |
| Usable ranges: | | |
| | XTG-411-2A | XTG-411-4A |
| First (1) (low range) | 5.69:1 | 4.69:1 |
| Second (2) (low intermediate) | 3.17:1 | 3.17:1 |
| Third (3) (intermediate) | 1.58:1 | 1.58:1 |
| Fourth (4) (high range) | 0.79:1 | 0.79:1 |
| Low reverse (R-1) | 5.60:1 | 5.60:1 |
| High reverse (R-2) | 3.79:1 | 3.79:1 |
| Steer | 1.475:1 | 1.475:1 |
| Steer control — first and second | Clutch brake | Clutch brake |
| Steer control — third and fourth | Geared | Geared |
| Brakes | Mechanical — applied | Mechanical — applied |
| Oil capacity (refill) | 56 qt (53 L) | 48 qt (45.5 L) |
| Oil capacity (dry) | 84 qt (79 L) | 84 qt (79 L) |

### 1-14.5 Electrical System

| | |
|---|---|
| Voltage (nominal) | 24 Vdc |
| Batteries (12 Vdc each, series–parallel connected) | 4 |
| Type | 6TN |
| Alternator (M109A2/M109A3) | |
| Manufacturer | Leece-Neville |
| Model | A001-5504AA |
| Type | 3-phase |
| Amperage | 100 |
| Alternator (M109A4/M109A5) | |
| Manufacturer | Leece-Neville |
| Model | A001-5520AB |

Type ..... 3-phase
Amperage ..... 180

### 1-14.6 Communications

Intercommunications set (model) ..... AN/VIC-1
Outlets ..... 5
External extension (model) ..... C-988/U

### 1-14.7 Suspension

Type ..... Independent torsion bar
Road wheels ..... 14 sets
Size ..... 24 in. (61.0 cm)
Loadings:
1, 2, and 7 positions ..... 4000 lb (1814 kg) (approx)
Intermediate positions ..... 2600 lb (1179 kg) (approx)

### 1-14.8 Track

Adjustment at idler wheel ..... Track adjuster
Shoes per track ..... 79
Pitch ..... 6 in. (15.2 cm)
Width ..... 15 in. (38.1 cm)

### 1-14.9 Final Drives and Sprockets

Type ..... Spur gear
Ratio ..... 4.36:1
Sprocket pitch diameter ..... 19.5 in. (49.5 cm)
Teeth per sprocket ..... 10

### 1-14.10 Fire Extinguisher

Fixed — 10-lb (4.5-kg) bottles ..... 2
Portable — 5-lb (2.3-kg) bottle ..... 1

## SECTION III. PRINCIPLES OF OPERATION

## 1-15 EQUIPMENT OPERATION AND DESCRIPTION

Refer to TM 9-2350-311-10 and TM 9-2350-311-20-1 for hull-related systems and components. Refer to TM 9-2350-311-20-2 for cab-related systems and components.

# CHAPTER 2
# GENERAL HULL MAINTENANCE

## GENERAL

This chapter provides information and instructions needed to keep hull equipment and components in good repair. These instruction provide step-by-step and item-by-item illustrated text describing equipment, component service, and maintenance. References are also provided for maintenance-related procedures not within the scope of this manual (for example, welding).

CONTENTS PAGE


Section I REPAIR PARTS, SPECIAL TOOLS, TMDE, AND SUPPORT EQUIPMENT. . . . . 2-2
2-1 GENERAL . . . . . 2-2
2-2 COMMON TOOLS AND EQUIPMENT . . . . . 2-2
2-3 SPECIAL TOOLS, TMDE, AND SUPPORT EQUIPMENT. . . . . 2-2
2-4 REPAIR PARTS . . . . . 2-2
Section II GENERAL HULL MAINTENANCE INSTRUCTIONS . . . . . 2-2
2-5 DISASSEMBLY AND ASSEMBLY PROCEDURES . . . . . 2-2
2-6 REPLACEMENT OF PARTS . . . . . 2-3
2-7 BALL AND ROLLER BEARINGS . . . . . 2-3
2-8 REMOVING BURRS, SCRATCHES, AND RAISED METAL . . . . . 2-3
2-9 SCREW THREAD INSERTS (ONE-PIECE TYPE) . . . . . 2-4
2-10 WELDING . . . . . 2-5
2-11 ELECTRICAL TEST EQUIPMENT AND ELECTRICAL TESTING . . . . . 2-5
2-12 SHAFTS, GEARS, AND BEARINGS . . . . . 2-5
Section Ill CLEANING, PAINTING, AND LUBRICATION . . . . . 2-5
2-13 CLEANING . . . . . 2-5
2-14 PAINTING . . . . . 2-7
2-15 LUBRICATION . . . . . 2-7

## SECTION 1. REPAIR PARTS, SPECIAL TOOLS, TMDE, AND SUPPORT EQUIPMENT

### 2-1 GENERAL "

Tools, equipment, and repair parts will be issued to direct support and general support maintenance personnel for maintenance. The tools and equipment issued should only be used for tasks in this manual. When not in use, these tools should be properly stowed.

### 2-2 COMMON TOOLS AND EQUIPMENT

For authorized common tools and equipment, refer to the Modified Table of Organization and Equipment (MTOE).

### 2-3 SPECIAL TOOLS, TMDE, AND SUPPORT EQUIPMENT

The special tools and equipment listed and illustrated in TM 9-2350-31 1-24 P-1 are the only special tools and equipment necessary to perform maintenance operations described in this manual. TM 9-2350-311 -24P-1 is the authority for requisitioning special tools and equipment for supporting maintenance use. All references to special tools in this technical manual are located in Appendix C.

The fabricated tools mentioned apply only to supporting maintenance shops to enable these organizations to fabricate items locally. Fabricated tools are particularity valuable to shops engaged in repairing many identical components.

### 2-4 REPAIR PARTS

Repair parts are listed and illustrated in the Repair Parts and Special Tools List (RPSTL) covering direct support and general support maintenance (TM 9-2350-311 -24P-1 and TM 9-2350-31 1-24P-2). All mandatory replacement parts identified in the initial setups are listed in Appendix F.

## SECTION II. GENERAL HULL MAINTENANCE INSTRUCTIONS

### 2-5 DISASSEMBLY AND ASSEMBLY PROCEDURES

Complete disassembly of a component is not always necessary to make a required repair or replacement. Good judgement should be used to keep disassembly operations to a minimum.

When disassembling a unit, first follow basic inspection procedures, then remove only necessary components and subassemblies. These components may then be reduced, as required, into individual parts.

During disassembly, tag critical parts such as shims, bearings, and electrical wiring harnesses and leads to make assembly procedures easier. Tagging is important for electrical equipment if circuit number tags are illegible or missing.

**CAUTION**

Never scribe-mark bearing surfaces

Mark gears on mating teeth with scribe marks, dye, permanent ink, or paint to ensure correct positioning during assembly. Chalk or crayon markings should be avoided because they are not permanent.

During assembly, subassemblies should be assembled first, combined into major components where possible, and then installed to form a complete component.

Records to provide repair and replacement data and statistics should be carefully prepared and maintained in accordance with DA PAM 738-750.

## 2-8 REPLACEMENT OF PARTS

Unserviceable or nonrepairable assemblies will be broken down into items of issue. Serviceable parts will be returned to stock. Parts or assemblies that can not be repaired or reconditioned will be salvaged. Use new parts to replace them.

When assembling components and assemblies, replace damaged keys with new ones. If screws, washers, or nuts are damaged, they must be replaced. Gaskets, packings, bushings, preformed packings, seals, lockwashers, locknuts, lockrings, self-locking fasteners (screws, nuts, etc), cotter pins, and spring pins must be replaced if removed. Springs must be replaced if broken, kinked, cracked, or do not conform to standards specified in the repair data.

If a required part is not available, reconditioning the existing part will be necessary. Such parts should be inspected after reconditioning to determine suitability and probable service life. Replacement parts should be requisitioned immediately.

## 2-7 BALL AND ROLLER BEARINGS

Refer to TM 9-214, Inspection, Care, and Maintenance of Anti-Friction Bearings, for cleaning, inspection, and lubrication of bearings and instructions for evacuation of bearing life.

## 2-8 REMOVING BURRS, SCRATCHES, AND RAISED METAL

**WARNING**

Dry-cleaning solvent (P-D-880) is toxic and flammable. Wear protective goggles and gloves and use only in a well-ventilated area. Avoid contact with skin, eyes, and clothes. Do not breath vapors. Do not use near open frame or excessive heat. The flashpoint for type #1 is 100°F (38°C), and for type #2 is 138°F (59°C). if you become dizzy while using dry-cleaning solvent, get fresh air immediately and obtain medical aid. if contact with eyes is made, wash your eyes with water and obtain medical aid immediately.

## 2-8 REMOVING BURRS, SCRATCHES, AND RAISED METAL — CONTINUED

Use a fine-mill file, sharpening stone (items 9 and 23, Appx C), or abrasive paper (item 12, Appx B) dipped in dry-cleaning solvent (item 7, Appx B) to remove burrs, scratches, or raised metal. When filing aluminum, clean file often to avoid lodging file with aluminum particles that could gouge work surface.

## 2-9 SCREW THREAD INSERTS (ONE-PIECE TYPE)

When determined feasible by inspection, damaged threads should be repaired by rethreading, use of tap or die, or by "chasing" on a lathe.

Tapping holes for screw thread inserts that have mutilated threads may be repaired by drilling and tapping hole oversize and installing larger inserts, or by filling tapped hole by welding, redrilling, and tapping hole to original size. Refer to Table 2-1 for drill size and depth.

Use the following procedure to remove and install screw thread inserts:

1 Drill thread insert. Refer to Table 2-1 for drill size and depth.

2 Deflect keys inward and break off.

3 Remove reminder of thread insert with a screw extractor.

4 Install screw thread insert until 0.010 to 0.030 in. (0.25 to 0.76 mm) below surface of plate.

5 Drive keys in flush with plate.

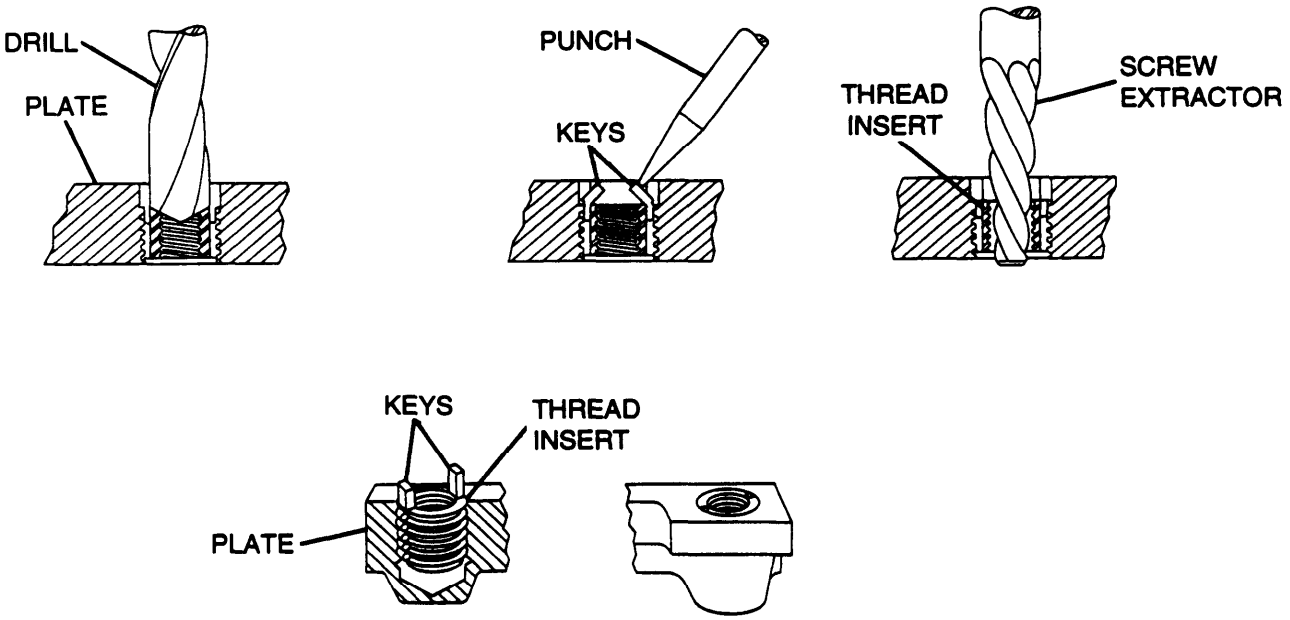

TABLE 2-1 THREAD INSERTS: DRILL SIZE AND DEPTH

| THREAD INSERT | | TAP DRILL DIAMETER | COUNTERSINK DIAMETER | REMOVAL DRILL | |
|---|---|---|---|---|---|
| INTERNAL THREAD | EXTERNAL THREAD | | | DIAMETER | DRILLING DEPTH |
| 10-24<br>10-32 | 3/8-1 6 | Q<br>0.332 in. | 0.391 in. | 0.281 in. | 0.25 in. |
| 1/4-20<br>1/4-28 | 7/1 6-14 | x<br>0.397 in. | 0.453 in. | 0.344 in. | 0.25 in. |
| 5/16-18<br>5/1 6-24 | 1/2-13 | 0.453 in. | 0.516 in. | 0.406 in. | 0.25 in. |
| 3/8-16<br>3/8-24 | 9/16-1 2 | 0.516 in. | 0.578 in. | 0.469 in. | 0.25 in. |
| 7/1 6-14<br>7/1 6-20 | 5/8-I 1 | 0.578 in. | 0.641 in. | 0.531 in. | 0.25 in. |
| 1/2-13<br>1/2-20 | 11/16 | 0.641 in. | 0.703 in. | 0.534 in. | 0.25 in. |

## 2-10 WELDING

For welding instructions and welding materials, refer to TC 9-237.

## 2-11 ELECTRICAL TEST EQUIPMENT AND ELECTRICAL TESTING

To use electrical test equipment and for electrical testing, refer to TM 9-2350-311 -20-1.

## 2-12 SHAFTS, GEARS, AND BEARINGS

Gears, bearings, sleeves, and other components may be installed on the shafts as tight fits. The use of an arbor press, gear pullers, or other appropriate tools for removal and installation maybe required.

# SECTION III. CLEANING, PAINTING, AND LUBRICATION

## 2-13 CLEANING

Refer to TM 9-247 for instruction on cleaning and for necessary cleaning materials. Also refer to TM 9-2350-311 -10 and TM 9-2350-311-20-1 for specific areas to be cleaned.

## 2-13 CLEANING — CONTINUED

### a. Cleaning of Materiel Received from Storage

**WARNING**

- Breathing vapor form decreasing solutions can cause headache, dizziness, loss of muscular control, coma, permanent brain damage, or death. Ensure that area is well ventilated as a preventative measure.
- Dry-cleaning solvent (P-D-680) is toxic and flammable. Wear protective goggles and gloves and use only in a well-ventilated area. Avoid contact with skin, eyes, and clothes. Do not breath vapors. Do not use near open flame or excessive heat. The flashpoint for type #1 is 100°F (38°C), and for type #2 is 138°F (59°C). If you become dizzy while using dry-cleaning solvent, get fresh air immediately and obtain medical aid. If contact with eyes is made, wash your eyes with water and obtain medical aid immediately.

Materiel received from storage will be cleaned by dip-tank, vapor-degreaser, or steam method, whichever is applicable or available. Descriptions of these methods follow. If some time is to elapse before the start of repair operations, apply a coating of light grade preservative oil (item 10, Appx B) to all finished metal surfaces to prevent rusting.

**CAUTION**

Do not immerse sealed-typed ball bearings in dry-cleaning solvent or hot oil.

1 Dip-tank method — Disassemble as required. Using rubber gloves (item 26, Appx B), place parts in a perforated metal basket, submerge, and agitate in a tank containing dry-cleaning solvent (item 7, Appx B).

2 Vapor-degreaser method — Tanks containing a heated solution of trichloroethylene or perchloroethylene are used for decreasing items that are very greasy or oily and are not readily cleaned by dip-tank method. Place parts in a perforated metal basket, and submerge just below the vapors in the tank, keeping the basket in this position until all of the grease, oil, or dirt melts and runs off the parts. If necessary, materiel maybe washed with decreasing spray unit.

3 Steam method — Place parts in a perforated metal basket and steam-treat until clean. This method is less efficient than the vapor-degreaser method and may require additional cleaning of parts to remove final traces of oil or dirt, particularly from recesses.

### b. Cleaning After Repair

After repair and prior to assembly, remove shop dirt and other foreign matter from all metal surfaces. Use the dip-tank or vapor-degreaser method or clean with cloths soaked in dry-cleaning solvent (item 7, Appx B).

### c. Cleaning After Shop Inspection

After in-process shop inspections, dip parts in a tank containing fingerprint remover oil. Remove parts while wearing rubber gloves, and dry thoroughly with dry compressed air or by wiping with clean, lint-free dry cloths. Apply preservatives as soon as possible after cleaning.

## 2-14 PAINTING

Refer to TM 9-2330-311-20-1 for painting instructions.

## 2-15 LUBRICATION

Refer to TM 9-2350-311-10 and TM 9-2330-311-20-1 for lubrication instructions.

# CHAPTER 3
# TROUBLESHOOTING

## GENERAL

This chapter provides the necessary information to quickly and accurately determine the cause of equipment malfunctions and direct you to procedures for the appropriate corrective action. It provides continued instructions when TM 9-2350-311 -20-1 refers to support maintenance for corrective action. Check the troubleshooting section of TM 9-2350 -311-20-1 and proceed as outlined.

Operating a malfunctioning vehicle can cause additional damage to disabled components and possibly injure personnel. With careful inspection and troubleshooting, damage and injury can be avoided and the causes of vehicle or component faulty operation can often be determined without extensive disassembly.

The Quick Guide to Troubleshooting (para 3-2) lists common malfunctions or problems and provides a solution or references the corrective maintenance procedure or technical manual for more detailed information.

When applicable, the Troubleshooting Chart (para 3-3) gives step-by-step instructions to resolve some problems identified in the Quick Guide to Troubleshooting (para 3-2).

CONTENTS

PAGE
3-1 GENERAL TROUBLESHOOTING INSTRUCTIONS . . . . . ...3-2
3-2 QUICK GUIDE TO TROUBLESHOOTING. . . . . ...3-2
3-3 Troubleshooting CHART . . . . . ...3-6

## 3-1 GENERAL TROUBLESHOOTING INSTRUCTIONS

The Quick Guide to Troubleshooting, the master reference table for locating troubleshooting solutions or references, contains a list of various malfunctions that may occur during operation or inspection of the M109A2/M109A3/M109A4/ Ml 09A5 Howitzer and provides a solution to these problems or references troubleshooting information in the Troubleshooting Chart or a technical manual.

Before starting troubleshooting procedures, perform basic systems tests as prescribed in TM 9-2350-311 -20-1 and ensure electrical power is on when necessary.

**WARNING**

Protective radiator fan screens must be installed prior to troubleshooting in engine compartment when engine is running or when engine is in ground hop mode. Contact with rotating fan can cause severe injury.

## 3-2 QUICK GUIDE TO TROUBLESHOOTING

To use the Quick Guide to Troubleshooting and the Troubleshooting Chart, follow the instructions below:

1 Determine the problem.
2 Locate the problem in the Quick Guide to Troubleshooting.
3 Locate the solution or reference identified for the problem in the Quick Guide to Troubleshooting.
4 Recheck the system and problem.
5 Perform the corrective action as required by the troubleshooting procedure.
6 Verify that the corrective action eliminated the problem.

| ITEM | PROBLEM | SOLUTION OR REFERENCE |
|---|---|---|
| ENGINE | VIBRATES EXCESSIVELY | Para 3-3a |
| | BLACK EXHAUST SMOKE IS PRESENT | TM 9-2815-202-34 |
| | WHITE EXHAUST SMOKE IS PRESENT | TM 9-2815-202-34 |
| | USES EXCESSIVE OIL | TM 9-2815-202-34 |
| | HAS NO OR LOW OIL PRESSURE | TM 9-2815-202-34 |
| TRANSMISSION | VIBRATES EXCESSIVELY | Para 3-3b |
| | OVERHEATS | TM 9-2520-234-35 |
| | VEHICLE DOES NOT DRIVE | TM 9-2520-234-35 |
| | VEHICLE STEERS PROPERLY IN ONE DIRECTION ONLY | TM 9-2520-234-35 |
| AIR CLEANER BLOWER MOTORS | DO NOT OPERATE | Repair or replace blower motors as required (para 5-5). |
| FUEL SYSTEM | FUEL LEAKAGE IN ENGINE COMPARTMENT | Inspect fuel tanks for damage, deterioration, or cracks. Repair or replace fuel tanks as required (para 5-3). |
| FLAME HEATER (ENGINE MODEL 7083-7396) | MOTOR AND PUMP ASSEMBLY DOES NOT OPERATE | Repair motor and pump assembly (TM 9-281 5-202-34). |
| | NO OR INSUFFICIENT FUEL FLOW THROUGH FLAME HEATER SOLENOID-OPERATED VALVE | Para 3-3c |

## 3-2 QUICK GUIDE TO TROUBLESHOOTING — CONTINUED

| ITEM | PROBLEM | SOLUTION OR REFERENCE |
|---|---|---|
| COOLING SYSTEM | ENGINE OVERHEATS | Para 3-3d |
| | ENGINE COOLING FANS DO NOT OPERATE WHEN ENGINE IS RUNNING | Check for broken, damaged, or defective fan driveshafts (para 6-4). |
| | COOLING FAN DRIVE ASSEMBLY DOES NOT MEET BACKLASH REQUIREMENT | Adjust backlash as required (para 6-2). |
| ELECTRICAL SYSTEM | ELECTRICAL COMPONENTS INOPERATIVE | Recharge or replace batteries (TM 9-6140-200-14). |
| | ELECTRICAL COMPONENTS INOPERATIVE, DEFECTIVE GENERATOR | Rebuild alternator as required (TM 9-2920-225-34 or TM 9-2920-258-30&P). |
| | ELECTRICAL COMPONENTS INOPERATIVE, DEFECTIVE MASTER RELAY | Test relay unit for proper operation (TM **9-4910-571-1 2&P).** |
| | ELECTRICAL COMPONENTS INOPERATIVE, DEFECTIVE RECTIFIER | Para 3-3g |
| FINAL DRIVE ASSEMBLY | EXCESSIVE OIL LEAKAGE AROUND FINAL DRIVE | Para 8-1 |

| ITEM | PROBLEM | SOLUTION OR REFERENCE |
|---|---|---|
| SUSPENSION SYSTEM | OIL LEAKS FROM UPPER SPINDLE HOUSING | Remove road wheel and road wheel arm from vehicle and inspect upper spindle housing for damage or cracks. Replace if damaged or cracked (para 8-2). |
| | SPINDLE HOUSING OVERHEATS | Disassemble upper spindle housing. Replace damaged bearings or spacers (para 8-2). |
| PERSONNEL VENTILATION BLOWER | INSUFFICIENT AIR CIRCULATION WITH BLOWER ON | Para 3-3e |
| BILGE PUMP | PUMP DOES NOT OPERATE WHEN MASTER SWITCH AND BILGE PUMP SWITCH ARE IN ON POSITION | Para 3-3f(1) |
| | PUMP OPERATES, BUT DOES NOT PUMP SUFFICIENT WATER | Para 3-3f(2) |
| PERSONNEL HEATER | FAILS TO OPERATE | TM 9-2540-205-24&P |
| GLOW PLUG SYSTEM (ENGINE MODEL 7083-7391 ) | FAILS TO OPERATE | TM 9-2815-202-34. |

## 3-3 TROUBLESHOOTING CHART

a. ENGINE VIBRATES EXCESSIVELY

**INITIAL SETUP**

References
TM 9-2515-202-34

**A** Inspect vibration damper (viscous) for damage.

Is vibration damper (viscous) damaged?

yes → Replace vibration damper and verify that problem is solved (para 4-5).

no → **B** Inspect mass ring and coupler for damage.

Is mass ring or coupler damaged?

yes → Repair or replace mass ring and coupler as required (para 4-4).

no → Refer to TM 9-2515-202-34 for further troubleshooting procedures.

**END OF TASK**

b. TRANSMISSION VIBRATES EXCESSIVELY

**INITIAL SETUP**

References
TM 9-2350-234-35

**A** Check for loose or damaged transmission trunnion caps.

Are transmission trunnion caps loose or damaged?

yes

no

Refer to TM 9-2350-234-35 for further

Replace transmission trunnion caps (para 4-6).

**END OF TASK**

## 3-3 TROUBLESHOOTING CHART — CONTINUED

| C. FLAME HEATER (ENGINE MODEL 7083-7396) | NO OR INSUFFICIENT FUEL FLOW THROUGH FLAME HEATER SOLENOID-OPERATED VALVE |
|---|---|

**INITIAL SETUP**

References
TM 9-2815-202-34

**A** Check flame heater solenoid for fuel flow.

Is fuel flow non-existent or insufficient?

yes

no

Troubleshoot fuel return system (TM 9-2815-202-34).

Repair flame heater solenoid (TM 9-2815-202-34).

**END OF ASK**

d. COOLING SYSTEM — ENGINE OVERHEATS

**INITIAL SETUP**

**References**
TM 750-254
TM 9-2815-202-34

**A** Inspect radiator for leaks (TM 750-254).

Does radiator leak?

yes → Repair or replace radiator as required and verify that problem is solved (TM 9-281 5-202-34).

no → **B** Check for defective engine coolant pump (TM 9-281 5-202-34).

Is engine coolant pump defective?

yes → Repair or replace coolant pump as required and verify that problem is solved (TM 9-2815-202-34).

no →

CONTINUED ON NEXT PAGE

## 3-3 TROUBLESHOOTING CHART — CONTINUED

d. COOLING SYSTEM

ENGINE OVERHEATS — CONTINUED

CONTINUED FROM STEP B

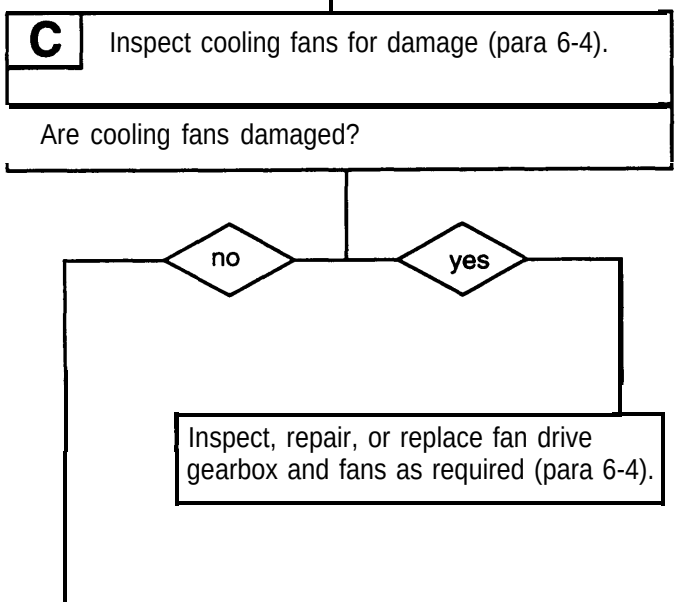


Refer to TM 9-2520-202-34 for further

**END OF TASK**

e. PERSONNEL VENTILATION BLOWER — INSUFFICIENT AIR CIRCULATION WITH BLOWER ON

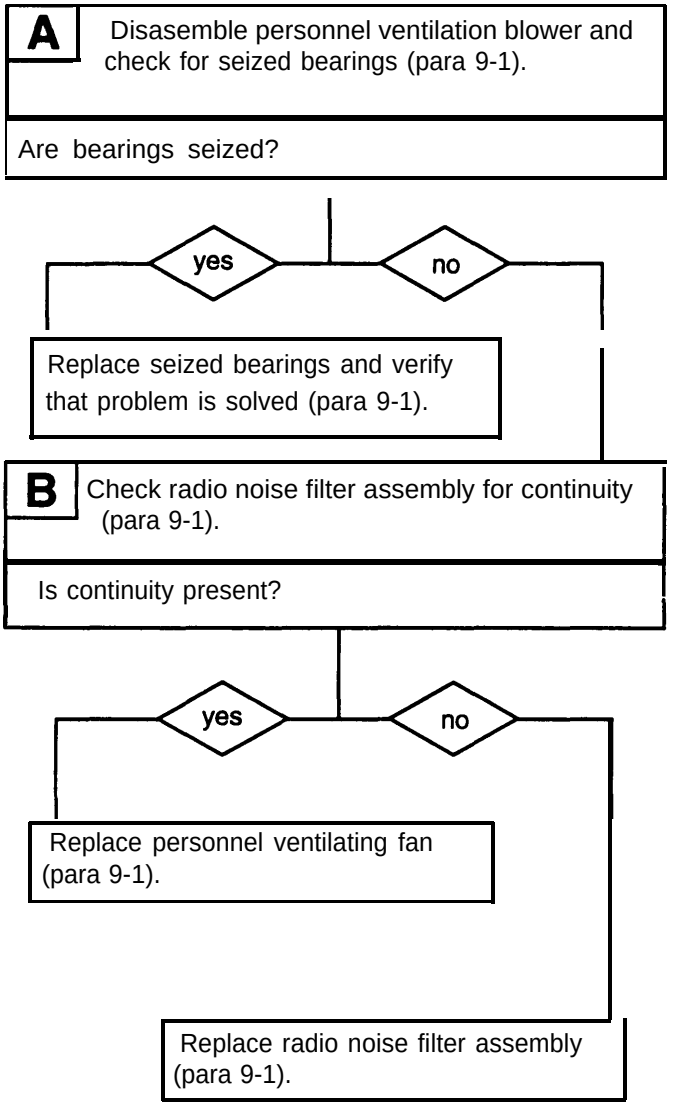


**END OF TASK**

## 3-3 TROUBLESHOOTING CHART — CONTINUED

f. BILGE PUMP

(1) PUMP DOES NOT OPERATE WHEN MASTER SWITCH AND BILGE PUMP SWITCH ARE IN ON POSITION

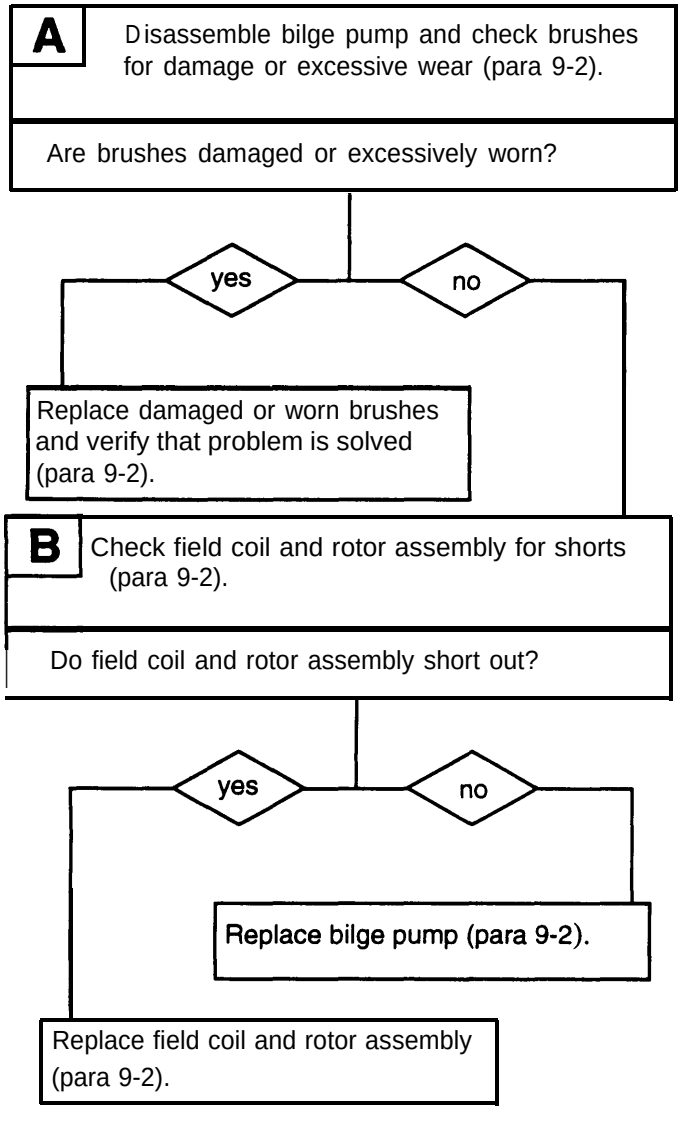


END OF TASK

f. BILGE PUMP

(2) PUMP OPERATES, BUT DOES NOT PUMP SUFFICENT WATER

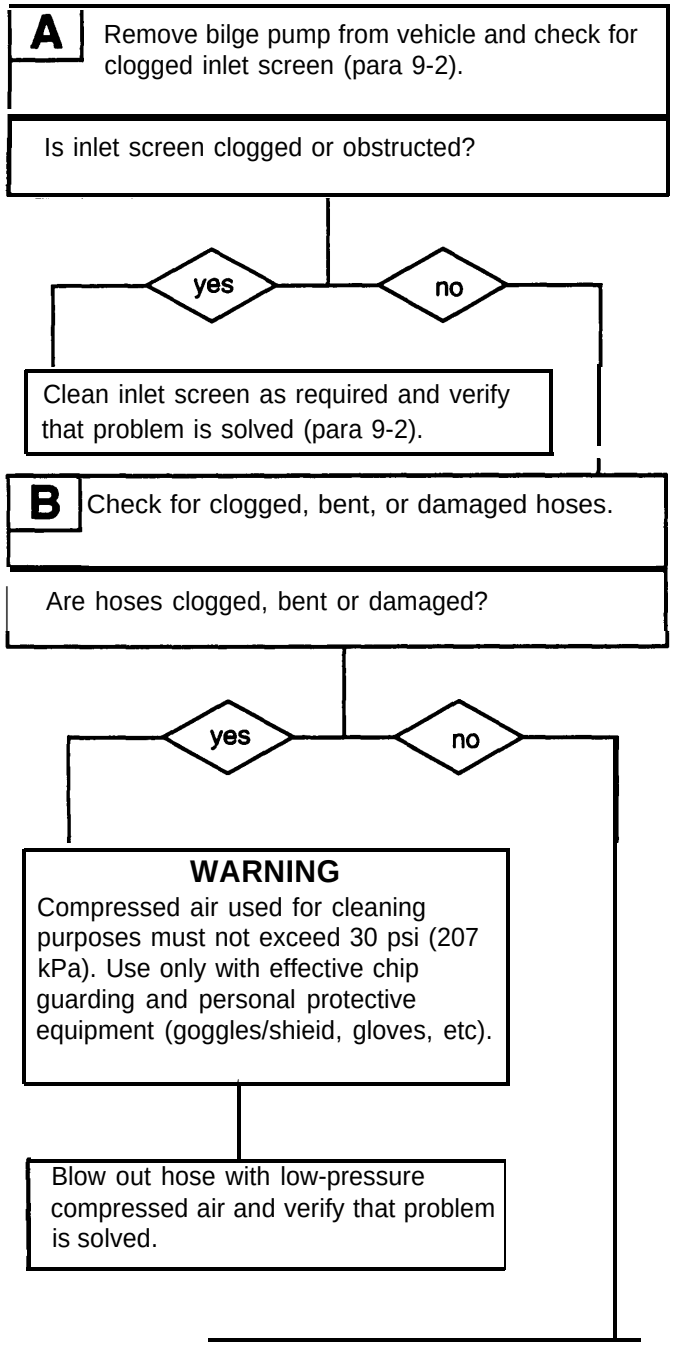


CONTINUED ON NEXT PAGE

## 3-3 TROUBLESHOOTING CHART — CONTINUED

f. BILGE PUMP

(2) PUMP OPERATES, BUT DOES NOT PUMP SUFFICIENT WATER — CONTINUED

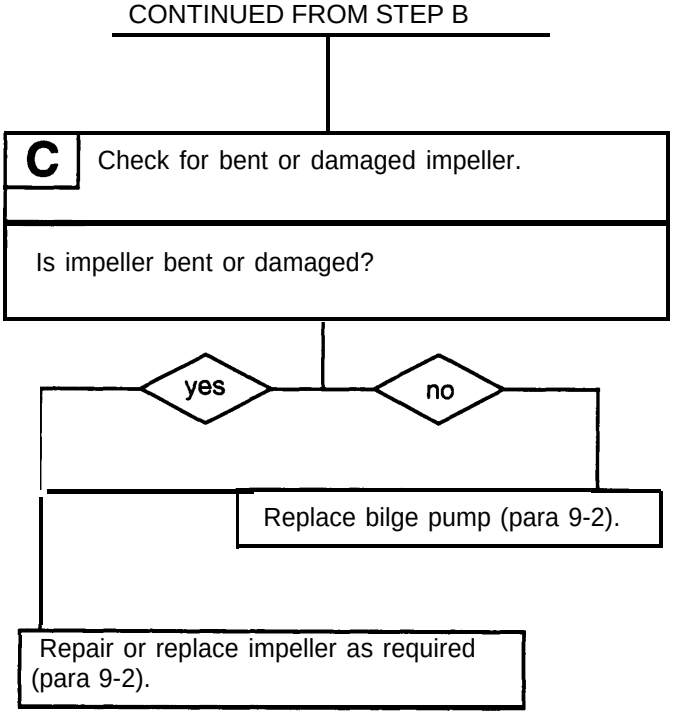


**END OF TASK**

g. ELECTRICAL SYSTEM

ELECTRICAL COMPONENTS INOPERATIVE, DEFECTIVE RECTIFIER

**INITIAL SETUP**

Tools
Multimeter (item 16, Appx C)

**NOTE**

Rectifier repair information for M1 09A2/M109A3 Howitzers is covered in paragraph 7-15 and repair information for M1 09A4/M109A5 Howitzers is covered in paragraph 7-16. Refer toTM9-4910-571 - 12&P, DA PAM 750-33, and TM 9-6140-200-14 when troubleshooting electrical system.

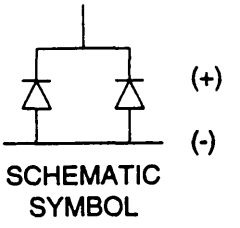


**A**

1. Place red lead of multimeter on positive terminal and black lead of multimeter to negative terminal of diode. Check for continuity.
2. For triple terminal diodes, repeat this step for both negative diodes.

Is continuity present?

yes

no

Replace diode.

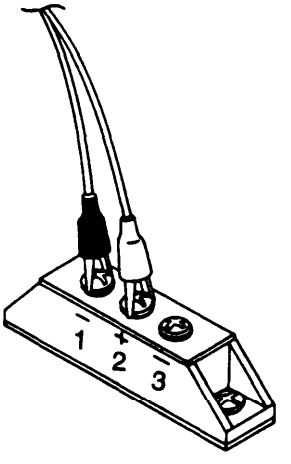


**B**

1. Place red lead of multimeter in negative terminal diode and black lead of multimeter to positive terminal of diode. Multimeter should read infinity (00). If reading is not 00, replace diode.
2. For triple diodes, repeat this step for both negative diodes.

**END OF TASK**

# CHAPTER 4
# SEPARATION AND ASSEMBLY OF POWERPLANT COMPONENTS

## GENERAL

This chapter describes and illustrates procedures for separating the engine from the transmission and transfer, repairing the engine vibration damper, and matmg and installing transmission trunnion replacement caps.

This chapter also identifies engine parts and accessories that are required to return an unserviceable, repairable engine to the overhaul depot for replacement. For repair or maintenance, including repair parts, that are not discussed in this manual refer to TM 9-2815-202-34 and TM 9-281 5-202-24P for model 8V71T diesel engine and TM 9-2520-234-35 and TM 9-2520-234-34P for model XTG-411 -2A transmission.

CONTENTS


| | | PAGE |
|---|---|---|
| 4-1 | SHIPPING AND STORAGE CONTAINERS AND ENGINE PARTS AND ACCESSORIES LIST. . . . | 4-2 |
| 4-2 | REMOVAL AND INSTALLATION OF ENGINE- AND TRANSMISSION-RELATED COMPONENTS .. | 4-4 |
| 4-3 | SEPARATION OF ENGINE FROM TRANSMISSION AND TRANSFER ASSEMBLY. . . . . | 4-15 |
| 4-4 | MASS RING AND COUPLER . . . . . | 4-20 |
| 4-5 | CRANKSHAFT VIBRATION DAMPER . . . . . | 4-22 |
| 4-6 | TRANSMISSION TRUNNION REPLACEMENT CAPS . . . . . | 4-23 |

## 4-1 SHIPPING AND STORAGE CONTAINERS AND ENGINE PARTS AND ACCESSORIES LIST

**NOTE**

Engine assembly, transmission assembly, and transfer assembly must be shipped and stored in their appropriate containers. Refer to TM 9-247 for preservation, storage, and shipment of ordnance material.

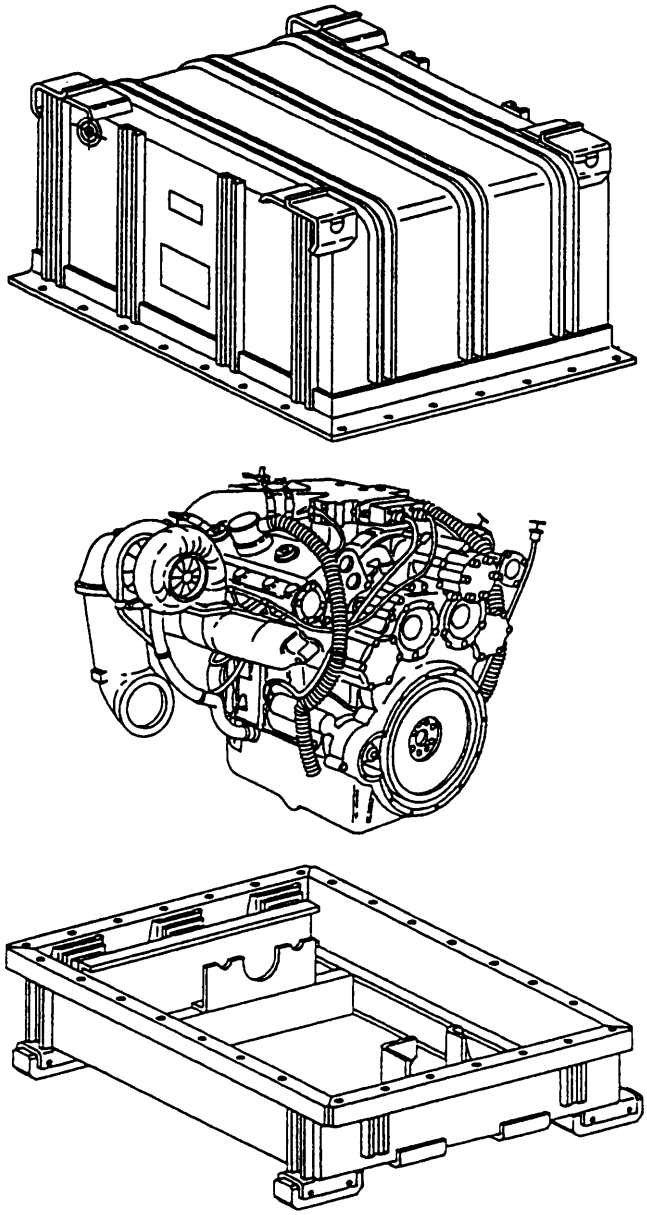

ENGINE ASSEMBLY WITH
SHIPPING AND STORAGE CONTAINER

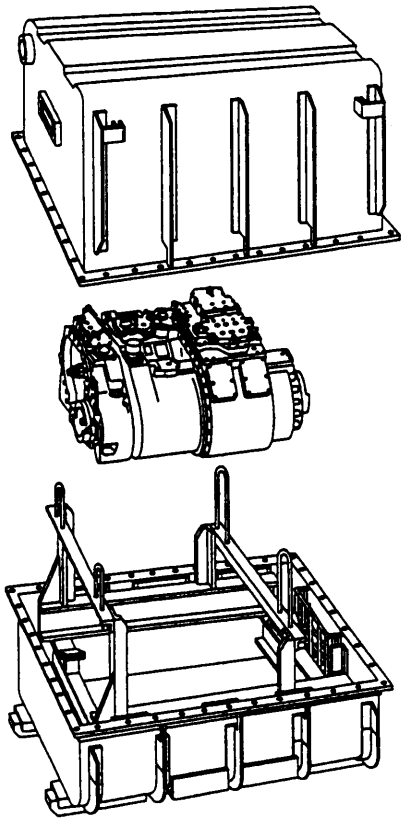

TRANSMISSION ASSEMBLY WITH
SHIPPING AND STORAGE CONTAINER

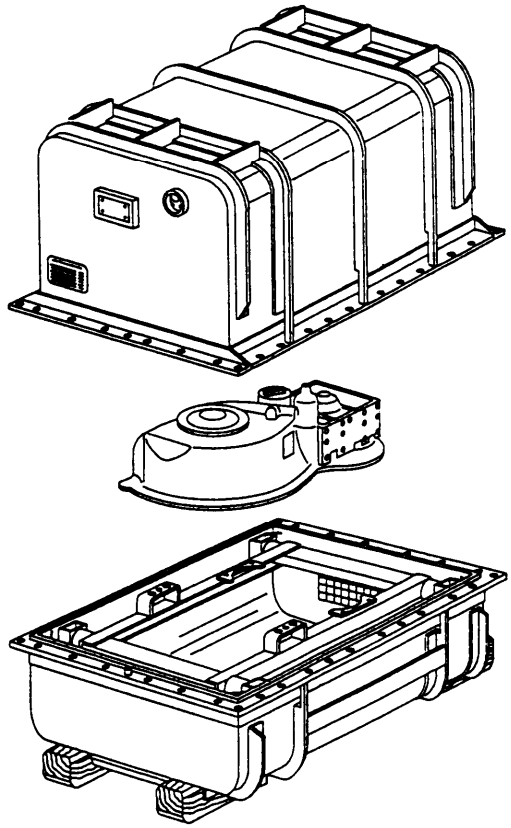

TRANSFER ASSEMBLY WITH
SHIPPING AND STORAGE CONTAINER

The following engine parts and accessories must be included when returning an unserviceable repairable engine to overhaul depot:

**NOTE**

Each assembly returned to overhaul depot must include component engine parts and accessories. Refer to TM 9-2350-311-24P-1, TM 9-2815-202-34, and TM 9-2815-202-24P for reporting and requisitioning information and data.

1 Engine oil pan
2 Cover assemblies (2)
3 Water and exhaust manifolds (3)
4 Fuel pump
5 Primary and secondary fuel filters
6 Starter
7 Relay solenoid
8 Water pump
9 Filter assembly
10 Air box heater (engine model 7083-7396)
11 Turbocharger assembly
12 Blower assembly
13 Crossover pipe exhaust
14 Crossover hose assemblies (2)
15 Oil cooler assembly
16 Container
17 Breather pipes (2)
18 Air inlet housing
19 Governor
20 Gage rod
21 Glow plug controller (engine model 7083-7391 )

## 4-2 REMOVAL AND INSTALLATION OF ENGINE- AND TRANSMISSION-RELATED COMPONENTS

This task covers: a. Removal b. Installation

**INITIAL SETUP**

**Tools**
General mechanic's tool kit (item 14, Appx C)

**Materials/Parts**
Lockwashers (2) (item 40, Appx F)
Lockwashers (2) (item 41, Appx F)
Lockwashers (4) (item 32, Appx F)
Lockwasher (item 36, Appx F)

**References**
TM 9-2350-311-20-1

**Equipment Conditions**
Powerplant removed (TM 9-2350-311-20-1)
Engine and transmission oil and coolant system drained (TM 9-2350-311-10)
Radiator and surge tank removed (TM 9-2350-311 -20-1 )
Atternator removed (TM 9-2350-311-20-1)
Radiator shroud and cooling fan assemblies removed (TM 9-2350-311-20-1)
Oil sampling components removed from oil filters and transmission (TM 9-2350-311-20-1 )

### a. Removal

**WARNING**

Do not smoke or use open flame when working on fuel systems. An explosion may occur, causing severe injury or death.

NOTE

To aid engine and transmission separation, disconnect all hoses at transmission. To disconnect hoses from engine after separation, refer to TM 9-2350-311-20-1.

1 Loosen two hose connector nuts (1) and disconnect engine oil filter-to-oil cooler hose (2) and oil cooler-to-oil filter hose (3).

2 Remove two elbows (4) from two filters (5). Install two elbows to two disconnected hoses (2 and 3).

3 Loosen nut (6) and disconnect oil cooler-to-transmission hose (7).

4 Loosen four screws (8) at oil cooler housing (9).

5 Remove hose connector (10) and disconnect transmission-to-oil cooler hose (11 ).

6 Remove screw (12) and lockwasher (13) and release transmission-to-oil cooler hose (11 ) from transmission housing (14). Discard lockwasher.

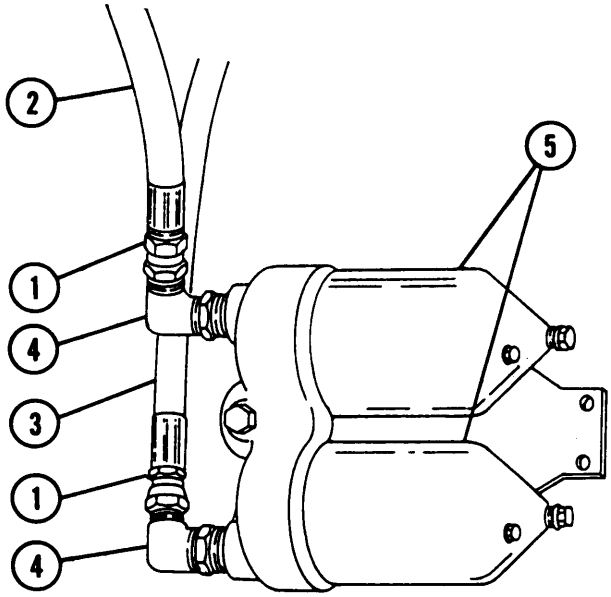
2
5
1
4
3
1
4

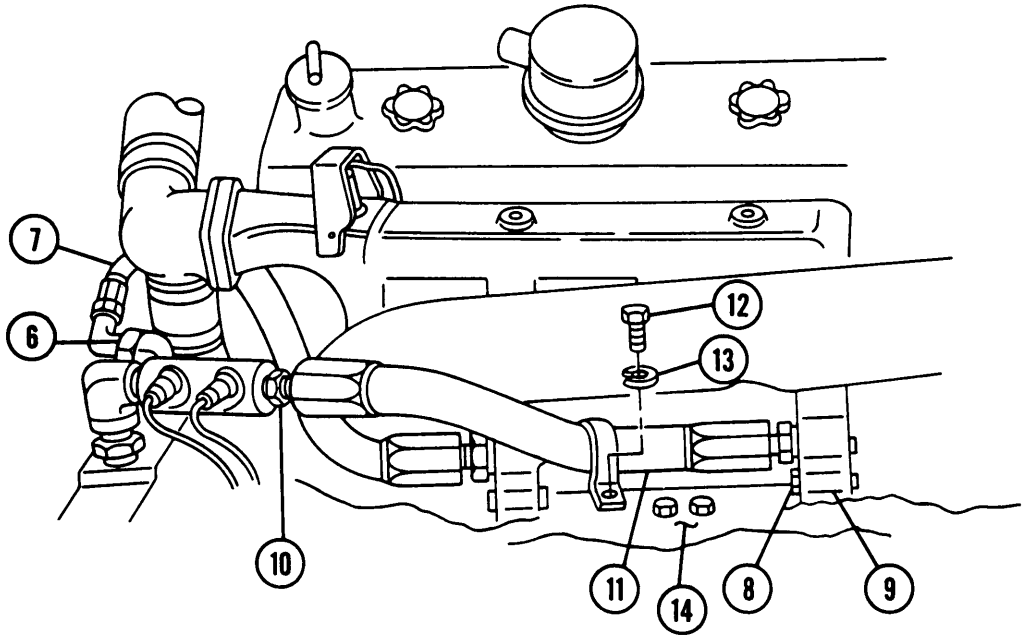
7
6
12
13
10
11
14
8
9

## 4-2 REMOVAL AND INSTALLATION OF ENGINE- AND TRANSMISSION-RELATED COMPONENTS — CONTINUED

**a. Removal — Continued**

7 Remove screw (15), flat washer (16), lockwasher (17), and nut (18) at mounting bracket (19) to release tachometer cable (20) and speedometer cable (21 ) from mounting bracket.

8 Install screw (15), flat washer (16), lockwasher (17), and nut (18) to mounting bracket (19).

9 Disconnect tachometer cable (20) from engine near generator.

10 Remove speedometer cable (21) and tachometer cable (20).

11 Disconnect four electrical connectors (22 thru 25).

12 Remove two screws (26), two lockwashers (27), and engine disconnect bracket (28).

13 Install two screws (26) and two lockwashers (27).

14 Remove nut (29) and sleeve (30) and disconnect primary filter-to-engine-driven fuel pump tube (31 ).

15 Remove two screws (32), two flat washers (33), two lockwashers (34), two nuts (35), and primary fuel filter (36). Discard lockwashers.

16 Disconnect elbow (37) from engine-driven fuel pump (38).

17 Remove three screws (39 and 40), three flat washers (41 and 42), three nuts (43 and 44), and three tube clamps (45 and 46).

18 Remove screw (47) and tube clamp (48). Install screw to transmission housing (14).

19 Remove primary fuel filter-to-engine-driven fuel pump tube (31 ).

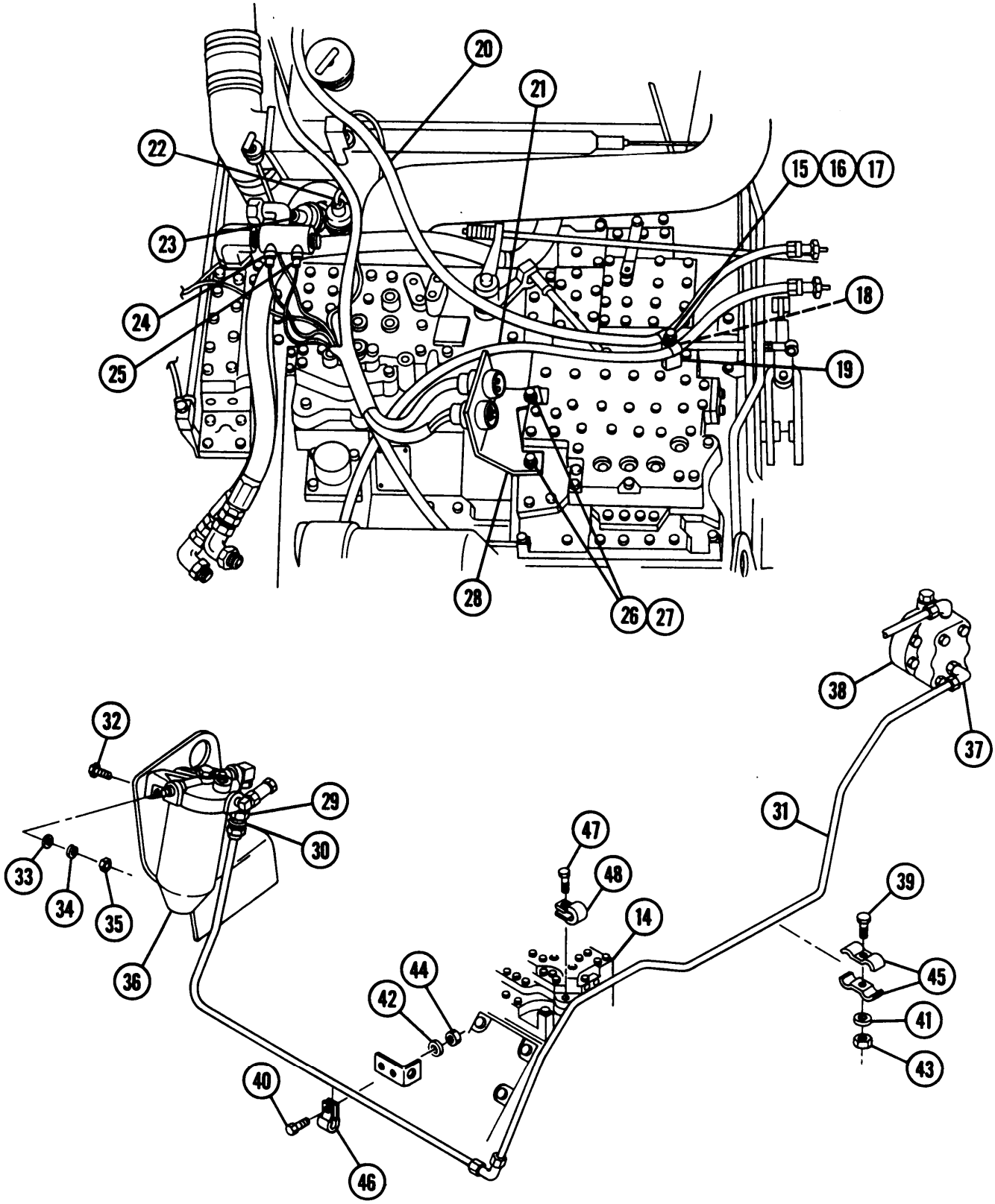
20
21
22
15
16
17
23
18
24
25
19
28
26
27
38
32
37
29
31
30
47
33
48
39
34
14
35
45
36
44
42
41
43
40
46

## 4-2 REMOVAL AND INSTALLATION OF ENGINE- AND TRANSMISSION-RELATED COMPONENTS — CONTINUED

**a. Removal — Continued**

20 Remove two adapters (49) from two secondary fuel filter elbows (50).

21 Remove adapter (51) at engine connector (52).

22 Disconnect elbow (53) from engine driven fuel pump (38).

23 Remove three screws (54), three flat washers (55), and three clamps (56).

24 Remove two tubes (57 and 58).

25 Remove two screws (59), two flat washers (60), two lockwashers (61 ), and two nuts (62). Discard lockwashers.

26 Remove plug (63).

27 Remove secondary fuel filter (64).

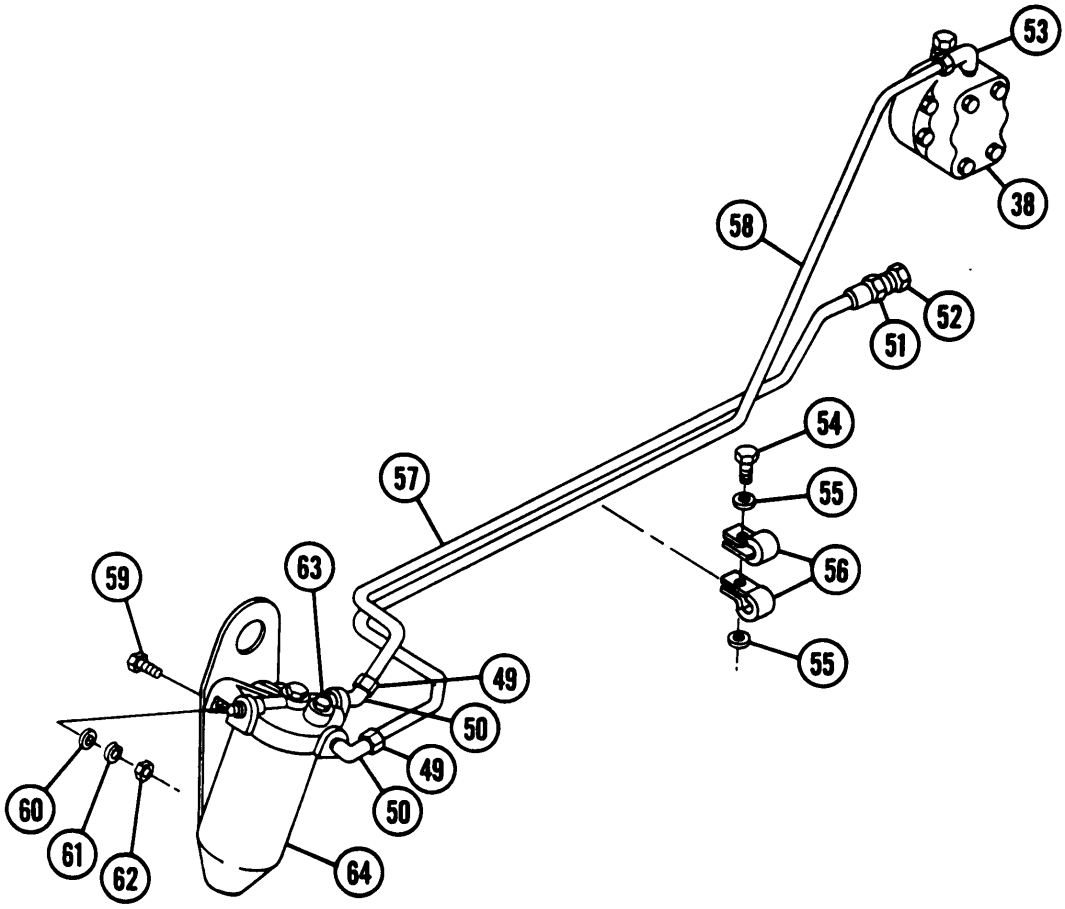

28 Loosen hose clamp (65).

29 Disconnect surge tank-to-coolant main tube hose (66) from coolant main tube (67).

30 Loosen two hose clamps (68).

31 Disconnect hose connector (69) from coolant pump (70).

32 Loosen two hose clamps (71) and remove two hoses (72) from two elbows (73) at crossover tube (74).

33 Remove two elbows (73) from crossover tube (74).

34 Loosen two hose clamps (75) at bypass thermostat housing (76).

35 Remove screw (77), lockwasher (78), and clamp (79). Discard lockwasher.

36 Pull coolant main tube-to-bypass thermostat housing connector hose (80) away from bypass thermostat housing (76).

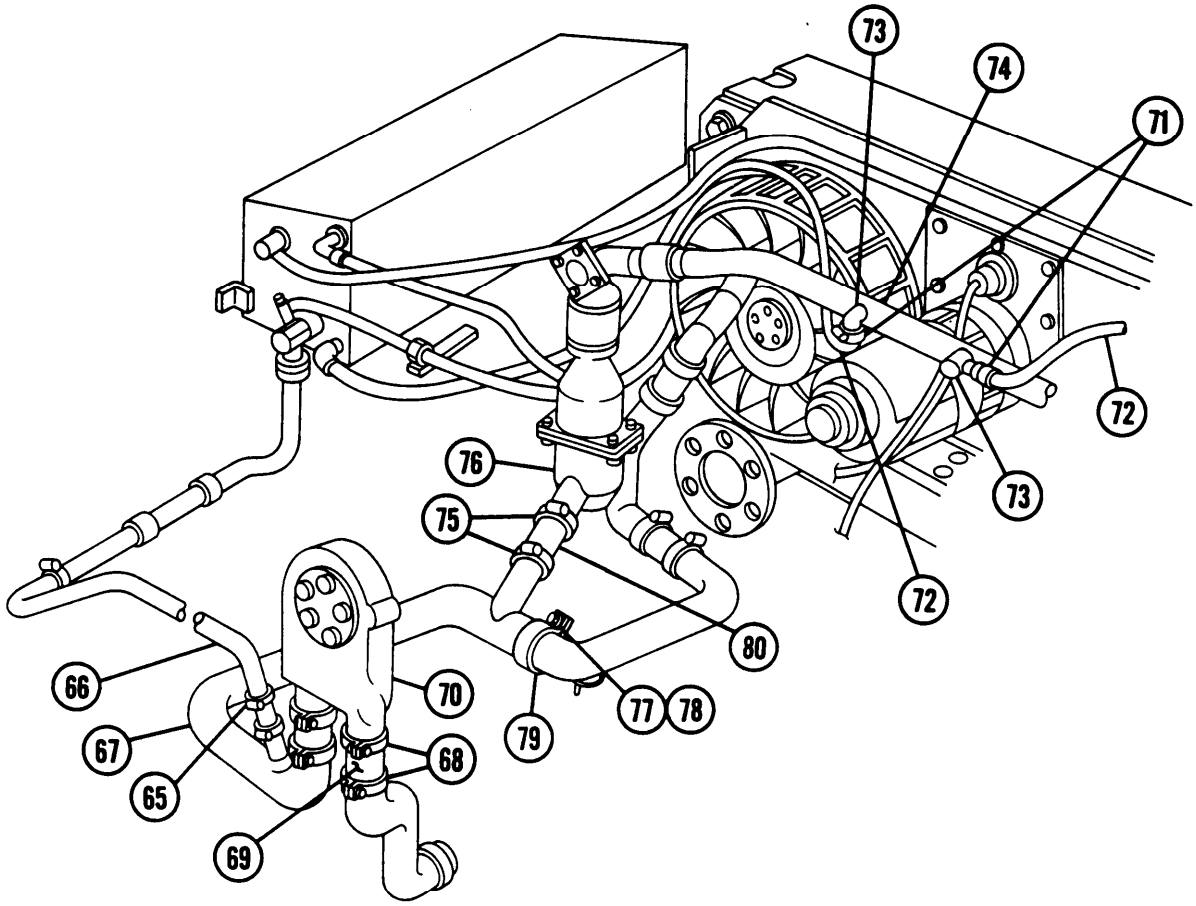

## 4-2 REMOVAL AND INSTALLATION OF ENGINE- AND TRANSMISSION-RELATED COMPONENTS — CONTINUED

**b. Installation**

**WARNING**

Do not smoke or use open flame when working on fuel systems. An explosion may occur, causing severe injury or death.

1 Assemble powerplant (para 4-3).

2 Install two hose clamps (75) to coolant main tube-to-bypass thermostat housing connector hose (80).

3 Attach coolant main tube-to-bypass thermostat housing connector hose (80) and tighten two hose clamps (75).

4 Install clamp (79), new lockwasher (78), and screw (77).

5 Install two elbows (73) at crossover tube (74).

6 Install two hoses (72) and two hose clamps (71 ) to two elbows (73).

7 Install two hose clamps (68) to hose connector (69).

8 Connect hose connector (69) to coolant pump (70) and tighten two hose clamps (68).

9 Connect surge tank-to-coolant main tube hose (66) to surge tank (81) and tighten hose clamp (65).

10 Install secondary fuel filter (64).

11 Install plug (63).

12 Install two nuts (62), two new lockwashers (61), two flat washers (60), and two screws (59).

13 Install two tubes (57 and 58).

14 Install three flat washers (55) and three screws (54) and tighten three clamps (56).

15 Connect elbow (53) to engine-driven fuel pump (38).

16 Install adapter (51 ) to engine connector (52).

17 Install two adapters (49) to two secondary filter elbows (50).

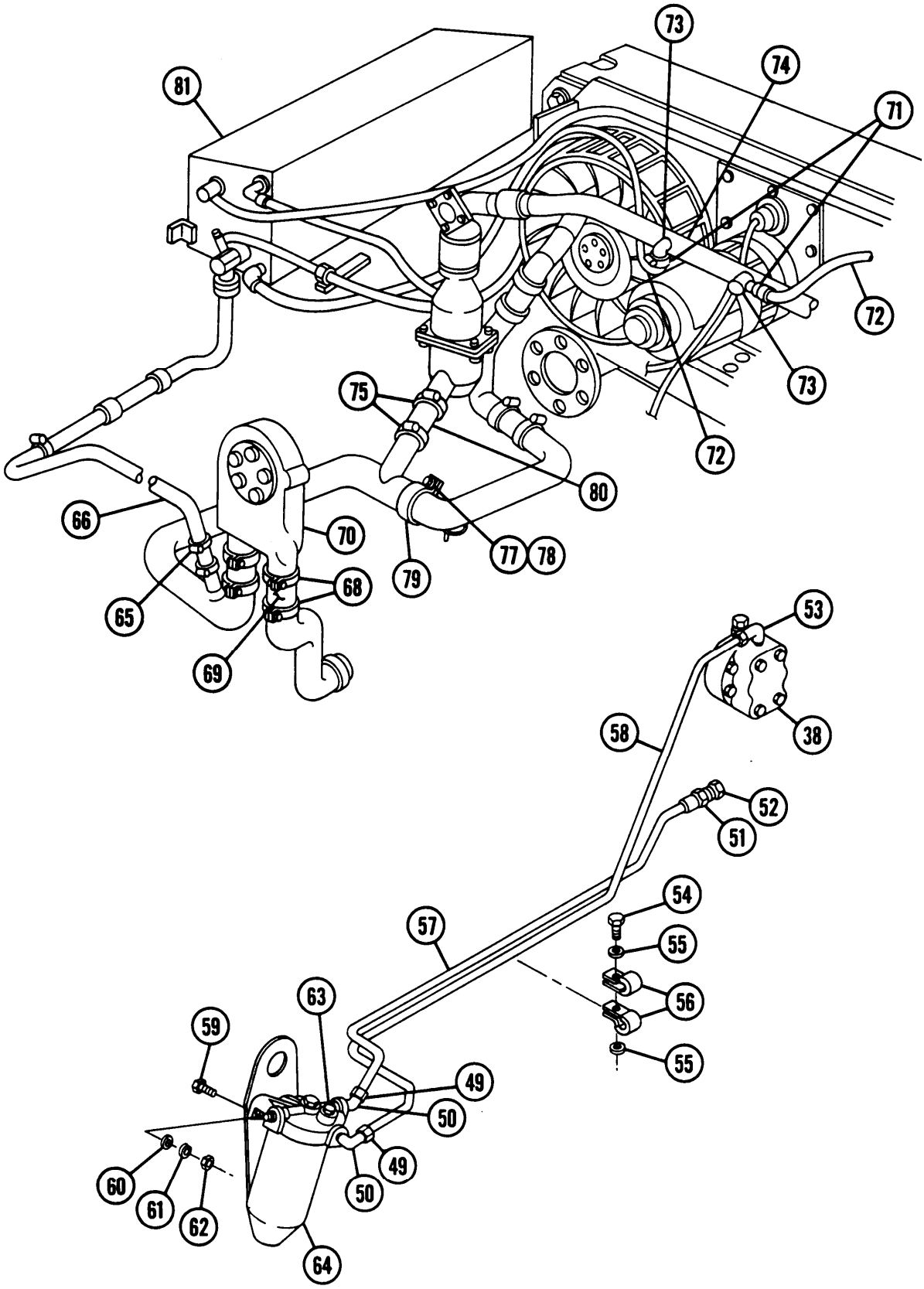
73
74
81
71
72
73
75
72
80
66
70
77
78
79
68
65
69
53
38
58
52
51
54
57
55
56
63
59
55
49
50
49
60
50
61
62
64

## 4-2 REMOVAL AND INSTALLATION OF ENGINE- AND TRANSMISSION-RELATED COMPONENTS — CONTINUED

**b. Installation — Continued**

18 Install primary fuel filter (36), two nuts (35), two new lockwashers (34), two flat washers (33), and two screws (32).

19 Install primary fuel filter-to-engine-driven fuel pump tube (31 ).

20 Install sleeve (30) and nut (29) and connect primary fuel filter-to-engine-driven fuel pump tube (31 ) to primary fuel filter (36).

21 Remove screw (47) from transmission housing (14) and install tube clamp (48) and screw.

22 Install three tube clamps (45 and 46), three nuts (43 and 44), three flat washers (41 and 42), and three screws (39 and 40).

23 Connect elbow (37) to engine-driven fuel pump (38) and connect primary fuel filter-to-engine-driven fuel pump tube (31 ).

24 Install all previously removed tubes between engine and transmission to prevent damage.

25 Remove engine disconnect bracket (28). Temporarily remove two screws (26) and two lockwashers (27) in transmission. Discard lockwashers.

26 Install bracket (28), two new lockwashers (27), and two screws (26). Tighten screws.

27 Connect four electrical connectors (22 thru 25).

28 Install tachometer cable (20) and speedometer cable (21 ).

29 Connect tachometer cable (20) to engine near generator.

30 Remove nut (18), lockwasher (17), flat washer (16), and screw (15) from mounting bracket (19). Discard lockwashers.

31 Secure speedometer cable (21 ) and tachometer cable (20) by installing screw (15), flat washers (16), new lockwasher (17), and nut (18) to mounting bracket (19).

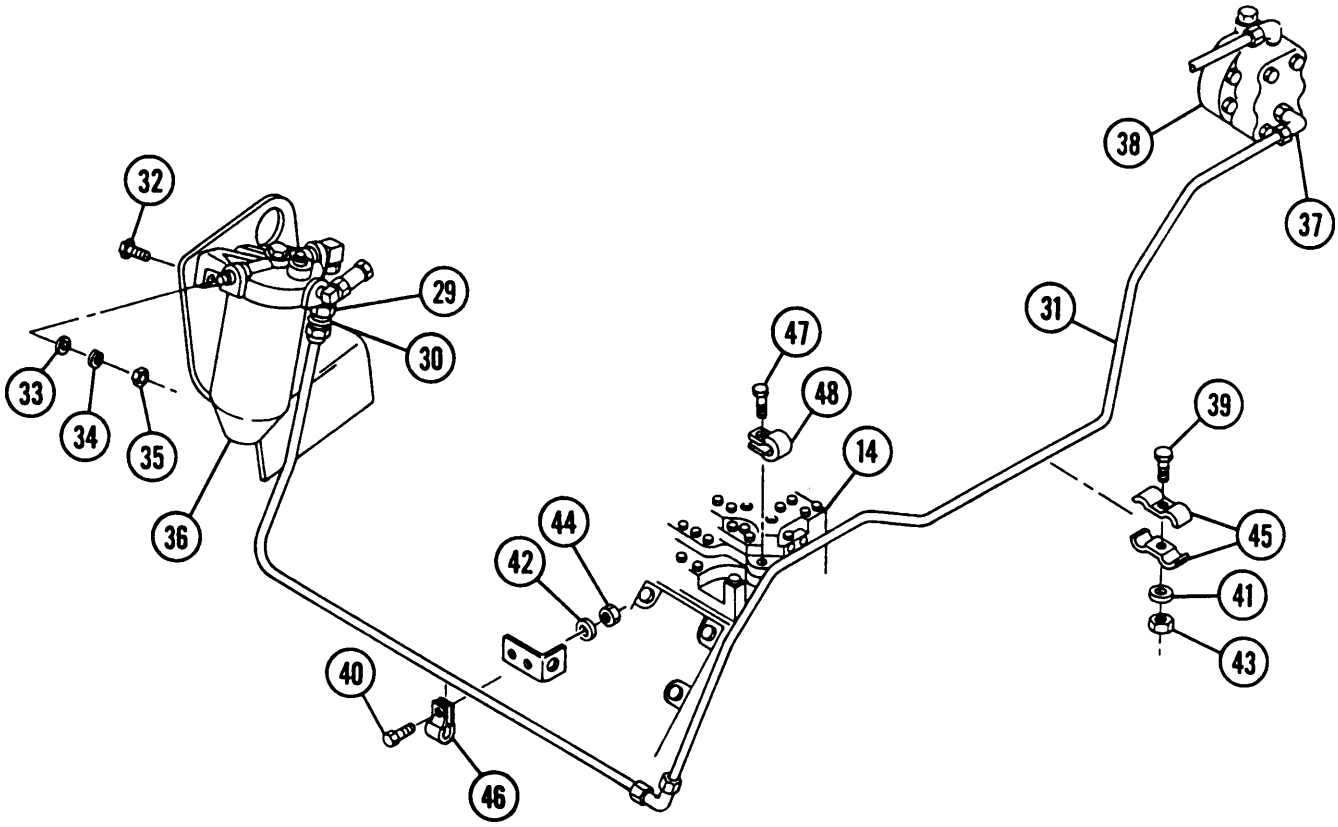
32
29
30
33
34
35
36
47
48
14
44
42
40
46
38
37
31
39
45
41
43

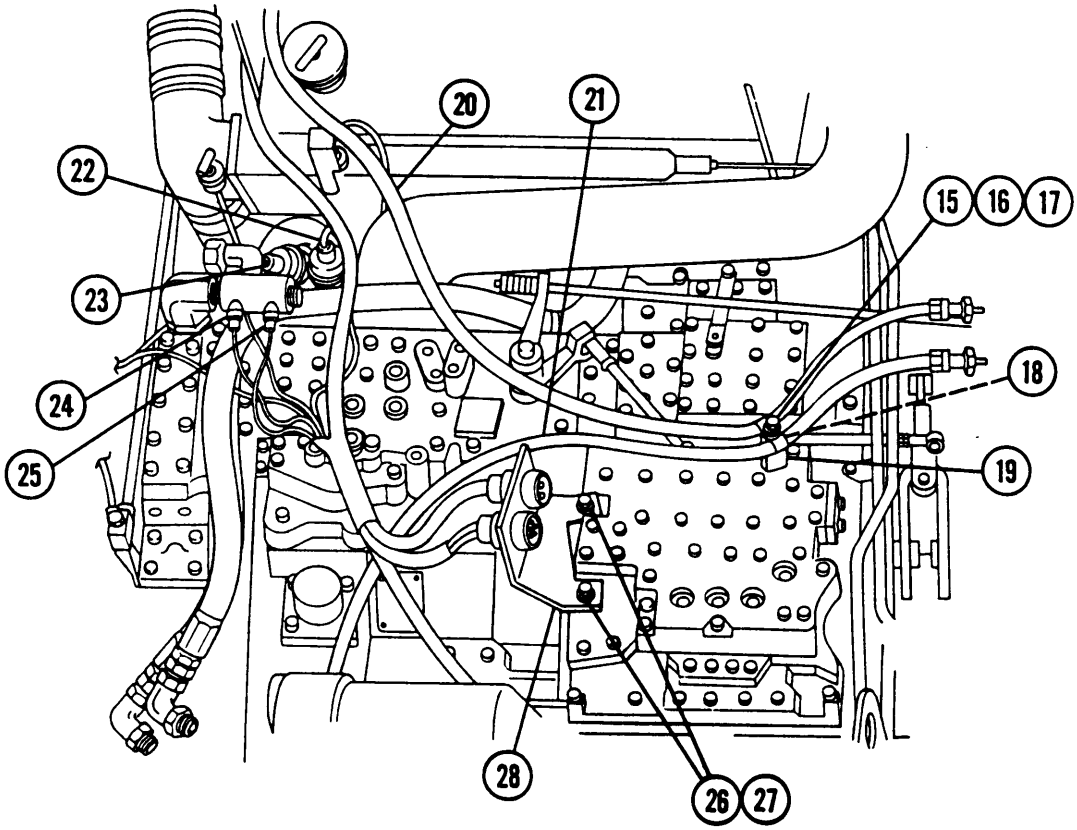
20
21
22
23
24
25
15
16
17
18
19
28
26
27

## 4-2 REMOVAL AND INSTALLATION OF ENGINE- AND TRANSMISSION-RELATED COMPONENTS — CONTINUED

**b. Installation — Continued**

32 Install new lockwasher (13) and screw (12) to attach transmission-to-oil cooler hose (11 ) to transmission housing (14).

33 Install hose connector (10) and connect transmission-to-oil cooler hose (11 ). Provide 0.63- to 0.87-in. (16.0- to 22.1 -mm) clearance between exhaust manifold (84) and hose (11 ).

34 Tighten four screws (8) to oil cooler housing (9).

35 Tighten nut (6) and connect oil cooler-to-transmission hose (7).

36 Install two elbows (4) to two filters (5). Remove elbows from ends of engine oil filter-to-oil cooler hose (2) and oil cooler-to-oil filter hose (3).

37 Tighten two hose connector nuts (1) and connect engine oil filter-to-oil-cooler hose (2) and oil cooler-to-oil filter hose (3).

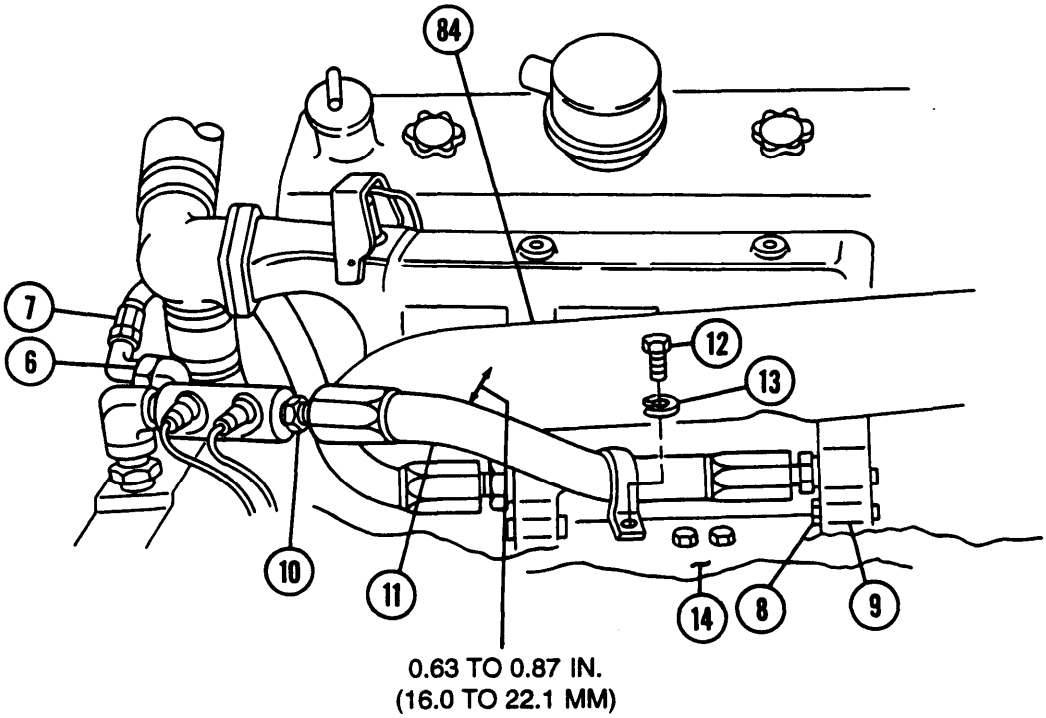

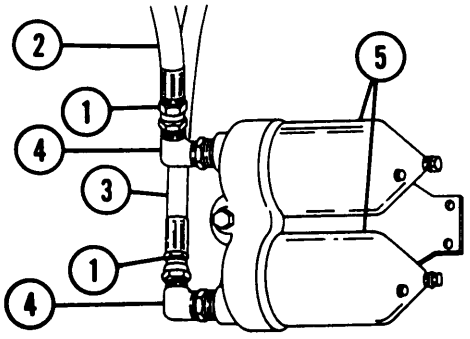


**NOTE**

FOLLOW-ON MAINTENANCE:
Install oil sampling components (TM 9-2350-311-20-1
hroud and cooling fan assemblies (TM9-2350-311-20-1)
Install alternator (TM 9-2350-311 -20-1)
Install radiator and surge tank (TM9-2350-311-20-1)
Fill engine and transmission oil coolant systems (TM9-2350-311-10)
Install powerplant (TM 9-2350-311-20-1)

## 4-3 SEPARATION OF ENGINE FROM TRANSMISSION AND TRANSFER ASSEMBLY

This task covers: a. Separation b. Assembly

**INITIAL SETUP**

**Tools**
General mechanic's tool Kit (item 14, Appx C)
Sling (item 21, Appx C)
Torque wrench (item 28, Appx C)

**Materials/Parts**
Gasket (item 68, Appx F)
Lockwashers (14) (item 38, Appx F)
Lockwashers (6) (item 39, Appx F)

**References**
TM9-2350-311-20-1

**Equipment Conditions**
Engine- and transmission-related components removed (para 4-2)

### a. Separation

**WARNING**

Never crawl under equipment when performing maintenance unless equipment is securely blocked. Keep clear of equipment when it is being raised or lowered. Do not allow heavy components to swing while suspended by lifting device. Use extreme caution when working near a cable under tension.

## 4-3 SEPARATION OF ENGINE FROM TRANSMISSION AND TRANSFER ASSEMBLY — CONTINUED

**a. Separation — Continued**

**CAUTION**

Use care to avoid damage to powerplant components during disassembly, cleaning, inspection, repair, and assembly. Nicks, scratches, and dents, resulting from careless handling, may cause oil leakage or improper functioning. This could result in transmission failure. All defective parts must be replaced. To prevent damage to equipment, handle heavy components with slings and hooks and block transmission for support in required positions.

1 Attach sling to hoist. Attach sling to engine at four lifting eyes (1) and take up slack in sling lines.

**CAUTION**

Ensure that transmission support at transfer assembly will prevent transmission from rolling when engine is disconnected.

2 Remove six screws (2), six flat washers (3), and six lockwashers (4) from tie bar (5) at transmission (6). Discard lockwashers.

**NOTE**

Record length of screws upon removal.

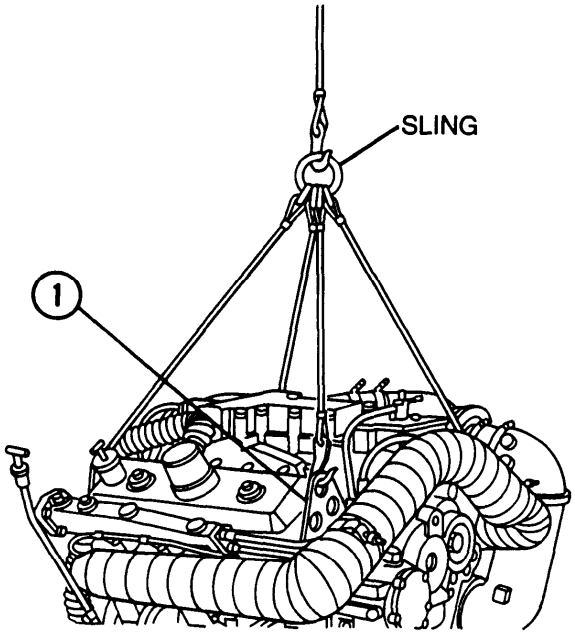


ENGINE MODEL 7083-7391 SHOWN

**3** Remove 14 screws (7), 14 flat washers (8), and 14 lockwashers (9). Discard lockwashers.

4 Pull engine (10) away from transfer assembly (11). Remove gasket (12). Discard gasket.

**5** Remove oil tubes (TM 9-2350-311-20-1).

6 Remove coolant hoses and tubes (TM 9-2350-311-20-1).

7 Remove remaining electrical wiring harnesses (TM 9-2350-311-20-1).

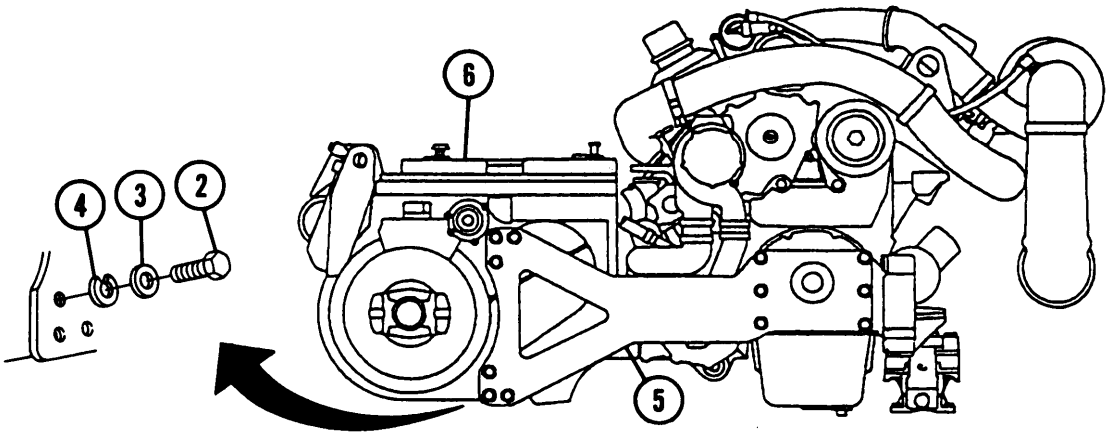


ENGINE MODEL 7083-7391 SHOWN

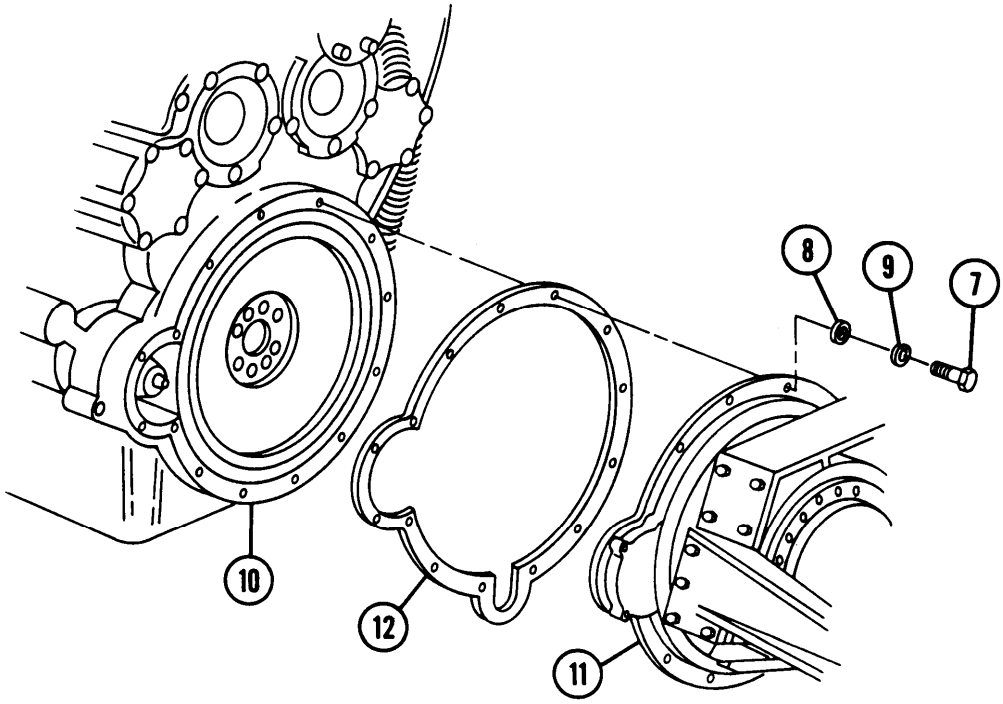

## 4-3 SEPARATION OF ENGINE FROM TRANSMISSION AND TRANSFER ASSEMBLY — CONTINUED

**b. Assembly**

**WARNING**

Never crawl under equipment when performing maintenance unless equipment is securely blocked. Keep clear of equipment when it is being raised or lowered. Do not allow heavy components to swing while suspended by lifting device. Exercise extreme caution when working near a cable under tension.

1 Install coolant hoses and tubes to engine (TM 9-2350-311-20-1).

2 Install oil tubes to engine (TM 9-2350-311-20-1),

**3** Install new gasket (12) and connect transfer assembly (11) to engine (10). Attach engine supports.

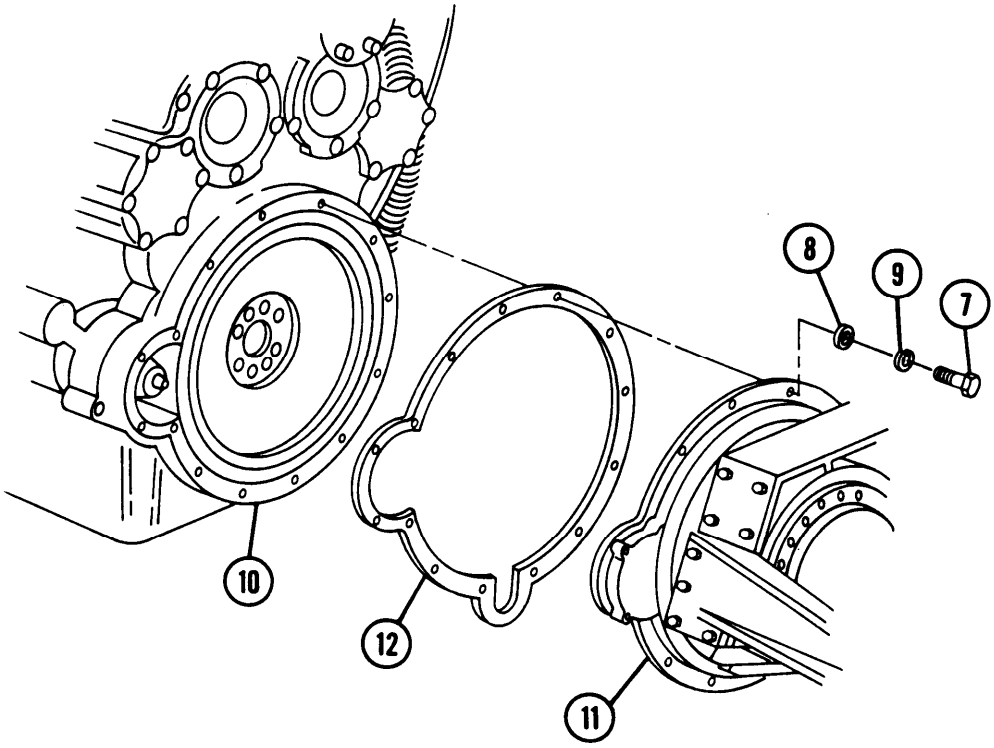

**NOTE**

See illustration below for proper screw lengths.

4 Install 14 new lockwashers (9), 14 flat washers (8), and 14 screws (7).

5 Install six new lockwashers (4), six flat washers (3), and six screws (2) to tie bar (5) at transmission (6). Torque six screws to 90-110 lb-ft (122-149 N•m).

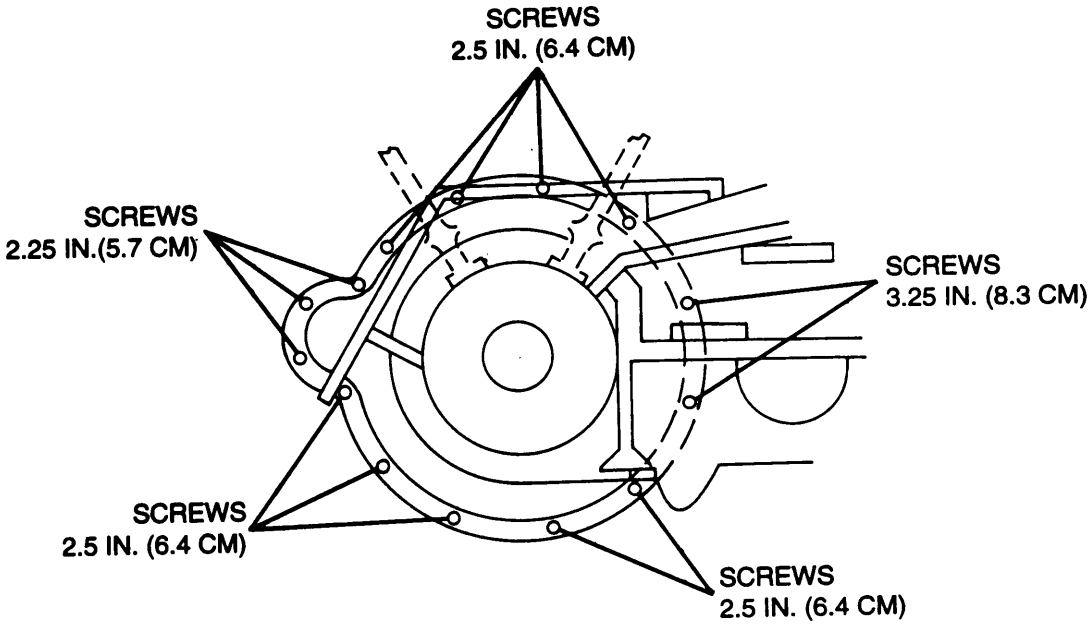


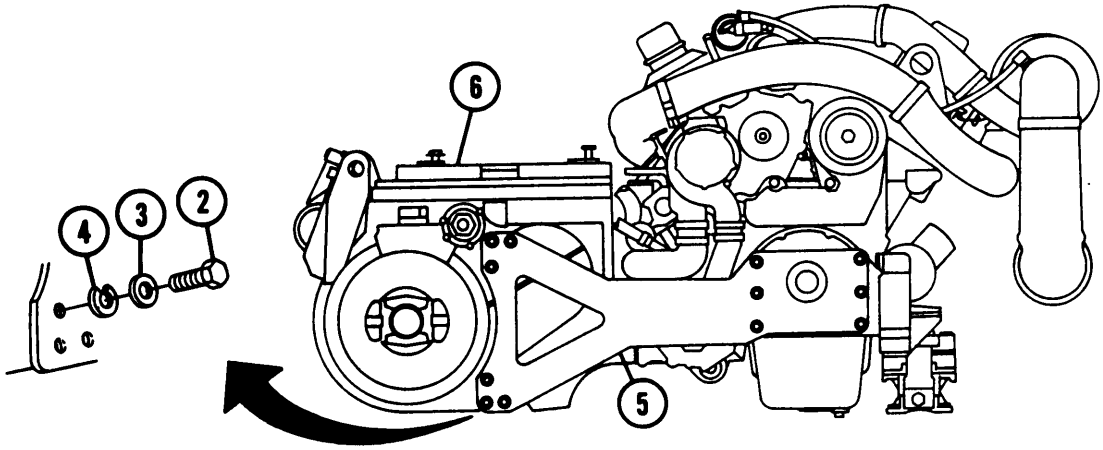


ENGINE MODEL 7083-7391 SHOWN

**NOTE**

FOLLOW-ON MAINTENANCE: Install engine- and transmission-related components (para 4-2)

## 4-4 MASS RING AND COUPLER

This task covers: a. Removal b. Inspection c. Installation

**INITIAL SETUP**

**Tools**
General mechanic's tool kit (item 14, Appx C)
Hammer (item 12, Appx C)
Torque wrench (item 28, Appx C)

**Materials/Parts**
Adhesive-sealant (item 3, Appx B)
Seals (2) (item 1, Appx F)

**Equipment Conditions**
Engine and transmission separated (para 4-3)

### a. Removal

1 Remove 12 screws (1), mass ring (2), and coupler (3).

2 Remove seal (4). Discard seal.

NOTE
Step 3 applies to optional coupler. Ring, cover and seal are only on optional coupler. Standard coupler is built with solid backplate.

3 Remove ring (5), cover (6), and seal (7). Discard seal.

### b. Inspection

Inspect rear surface of coupler (3). If surface is oil-soaked, springs or washers are broken, or coupler plate is distorted, replace coupler.

### c. Installation

Adhesives are toxic and flammable. Apply adhesives only in a well-ventilated area. Avoid contact with skin, eyes, and clothes, and don't breath vapors. Do not use near heat, sparks, or open flame. Read and follow all warnings and instructions on labels of adhesives. If contact with skin or eyes is made, wash area with water and seek medical aid immediately.

**NOTE**

Step 1 applies to optional coupler. Ring, cover, and seal are only on optional coupler.

1 Apply coating of adhesive-sealant to new seal (7) and install ring (5), cover (6), and seal.

2 Apply coating of adhesive-sealant to coupling seal grooves and new seal (4) and install seal on coupler (3).

**3** Coat splined teeth with adhesive-sealant and install coupler (3) and mass ring (2). Check for 0.010-to 0.012-in. (0.25- to 0.30-mm) clearance between mass ring (2) and engine (8). If clearance exceeds 0.015 in. (0.38 mm), carefully strike high points with hammer.

4 Install 12 screws (1). Torque screws to 40-50 Ib-ft (54-68 N•m).

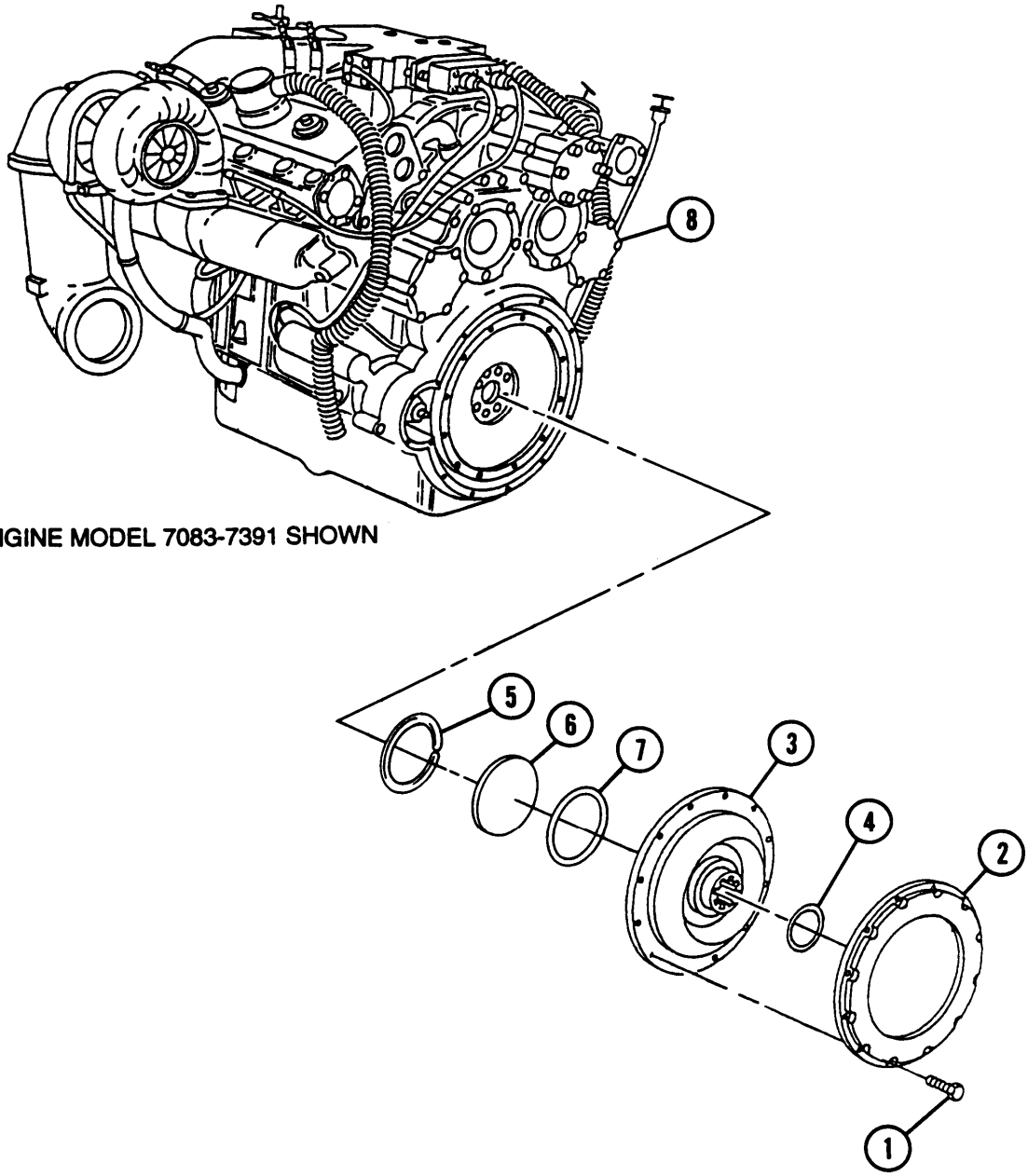


ENGINE MODEL 7083-7391 SHOWN

**NOTE**

FOLLOW-ON MAINTENANCE: Connect engine and transmission (para 4-3)

## 4-5 CRANKSHAFT VIBRATION DAMPER

This task covers: a. Removal b. Disassembly c. Inspection d. Assembly e. Installation

**INITIAL SETUP**

Tools
General mechanic's tool kit (item 14, Appx C)
Hammer (item 13, Appx C)
Torque wrench (item 26, Appx C)
Torque wrench (item 27, Appx C)
Torque wrench (item 28, Appx C)

**Materials/Parts**
Split cone (item 77, Appx F)

**a. Removal**

1 Loosen bolt (1) approximately 0.125 in. (3.2 mm).

2 Strike bolt (1) with hammer to loosen spilt cone (2).

3 Remove bolt (1), spacer (3), split cone (2), and hub and damper assembly (4). Discard spiit cone.

**b. Disassembly**

1 Remove six bolts (5) and six washers (6).

2 Separate hub (7) and damper (8).

**c. Inspection**

Inspect damper (8), hub (7), and spacer (3). Replace damaged items as required.

**d. Assembly**

Install six washers (6) and six bolts (5) to hub (7) and damper (8). Torque bolts to 60-70 lb-ft (81-95 N•m).

e. **Installation**

1 Install damper and hub assembly (4), new split cone (2), spacer (3), and bolt (1). Torque bolt to 180 Ib-ft (244 N•m),

2 Strike bolt (1) with hammer.

3 Torque bolt (1) to 300 Ib-ft (407 N•M). Strike bolt with hammer again.

4 Torque bolt (1) to 300-330 lb-ft (407-447 N•m).

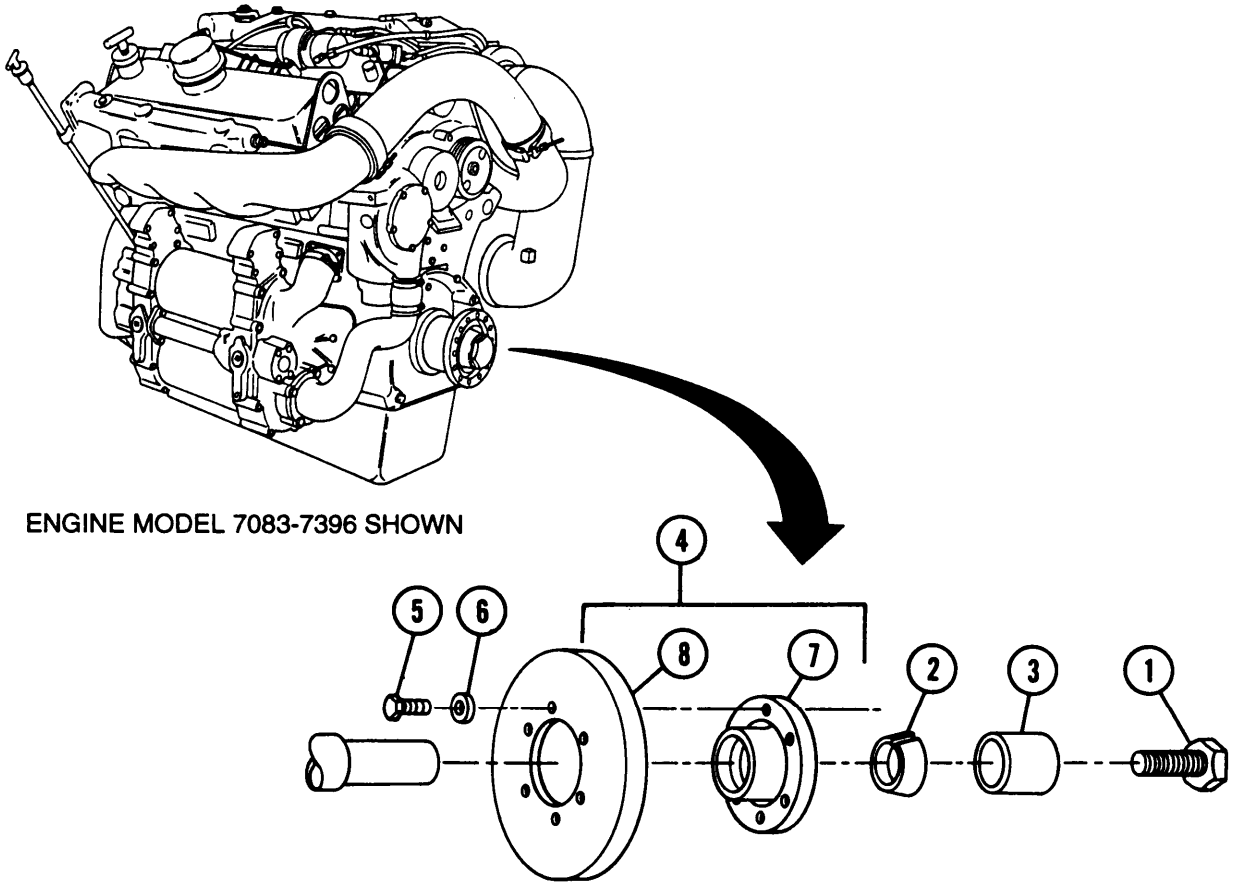


## 4-6 TRANSMISSION TRUNNION REPLACEMENT CAPS

This task covers: a. Replacement Trunnion Cap Preparation

b. Replacement Trunnion Cap Installation

**INITIAL SETUP**

**Tools**
General mechanic's tool kit (item 14, Appx C)
Drill (item 5, Appx C)
Drill bit (item 6, Appx C)
Torque wrench (item 28, Appx C)

**Materials/Parts**
Marking dye — blue (item 13, Appx B)
Transmission trunnion cap replacement kit (item 27, Appx B)

**Equipment Conditions**
Transmission trunnion cap removed (TM9-2350-311-20-1)

## 4-6 TRANSMISSION TRUNNION REPLACEMENT CAPS — CONTINUED

### a. Replacement Trunnion Cap Preparation

1 Locate and mark centerline of two support bolt holes (1) on front and rear of support (2).

2 Locate and mark center of replacement trunnion cap (3) on front and rear vertical face of cap.

3 With powerplant installed and transmission positioned in supports, place replacement trunnion cap (3) with insert (4) over support (2). Aline center mark on cap with hole center marks on support.

4 Measure pretorque clearance between cap (3) and support (2) at forward and rear edges. Clearance should be 0.005 to 0.007 in. (0.13 to 0.18 mm).

5 If clearance is less than 0.005 in. (0.13 mm), machine trunnion cap mating surfaces to obtain required clearance. If clearance is greater than 0.007 in. (0. 18 mm), use shims (5) as required to reduce gap.

6 Remove replacement trunnion cap (3) with insert (4) and leave shims (5) (as required) in place on support (2).

7 Install two socket head setscrews (6) in two support bolt holes (1).

**NOTE**

Screw must protrude 0.005 to 0.010 in. (0.13 to 0.25 mm) above support face or shim surface, if shims are used.

8 Apply marking dye to mating surface of replacement trunnion cap (3).

9 Reposition replacement trunnion cap (3) and strike top of cap with hammer. Socket head setscrews (6) will mark hole location outlines in marking dye.

10 Remove replacement trunnion cap (3) and socket head setscrews (6). Caps must be immediately marked “LF” or “RF” on forward surface to indicate if cap was removed from the left front or the right front (viewed from driver’s compartment facing forward).

11 Drill two 0.531 in. (13.49 mm) holes from bottom of trunnion cap (3) using outline of setscrews as location points. Holes must be free of burrs.

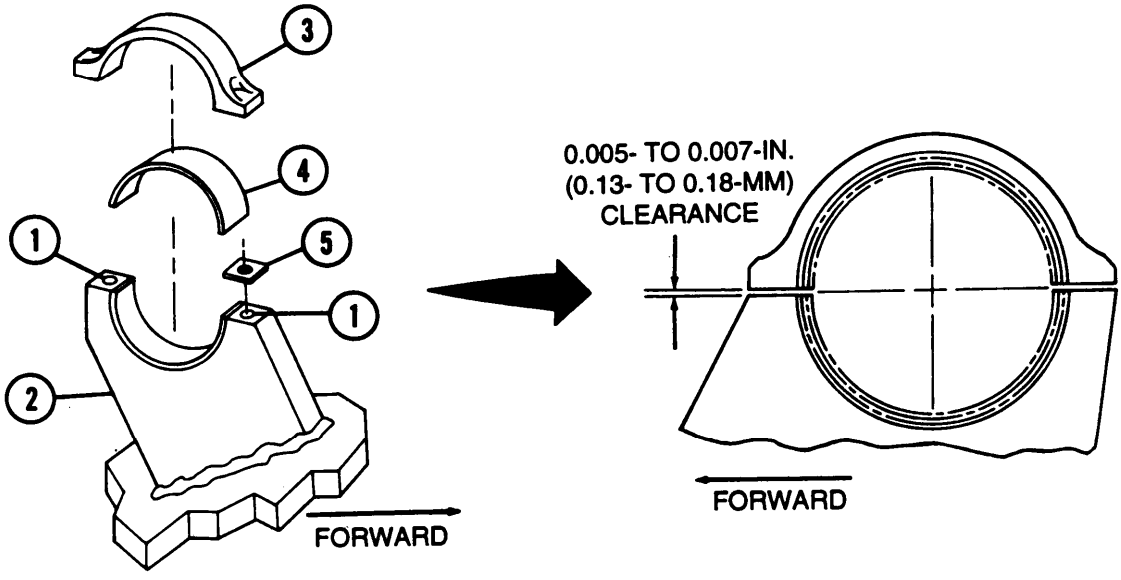


POWERPLANT SHOWN
REMOVED FOR CLARITY

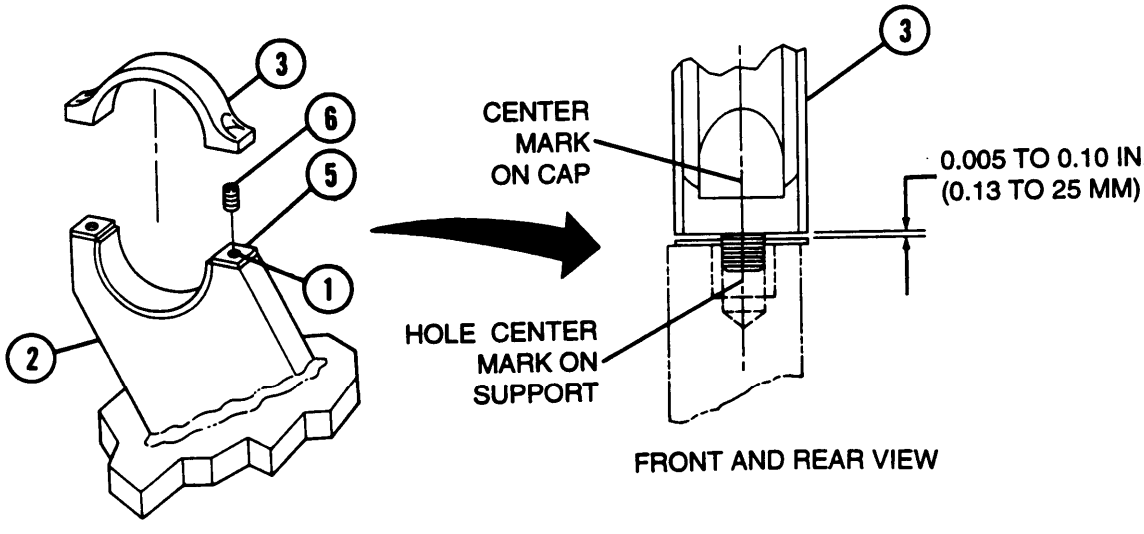


FRONT AND REAR VIEW

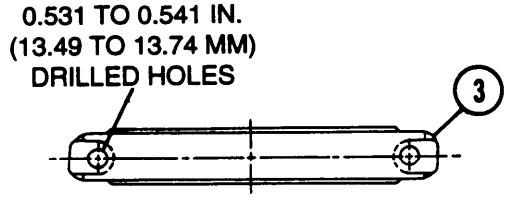

## 4-6 TRANSMISSION TRUNNION REPLACEMENT CAPS — CONTINUED

**b. Replacement Trunnion Cap Installation**

1 Aline transmission insert (4) in support (2) and replacement trunnion cap (3).

2 Install shims (5) (as required), replacement trunnion cap (3), two flat washers (7), and two bolts (8 and 9). Do not tighten.

3 Torque rear bolt (8) to 85-90 Ib-ft (115-122 N•m).

4 Torque forward bolt (9) to 85-90 Ib-ft (115-122 N•m).

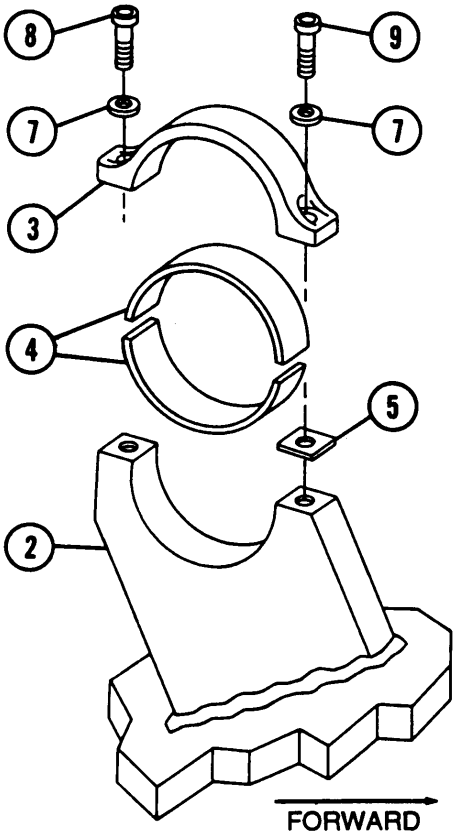


POWERPLANT SHOWN
REMOVED FOR CLARITY

**NOTE**

FOLLOW-ON MAINTENANCE: Install transmission trunnion cap (TM 9-2350-311-20-1)

# CHAPTER 5
# FUEL AND AIR INTAKE SYSTEMS

## GENERAL

This chapter describes and illustrates procedures for disassembly, inspection, repair, assembly, and testing of the fuel and air intake systems.

**CONTENTS**


| | | PAGE |
|---|---|---|
| 5-1 | ELECTRIC FUEL PUMPS | 5-2 |
| 5-2 | FUEL TANKS | 5-10 |
| 5-3 | FUEL TANK PADS | 5-20 |
| 5-4 | FUEL TANK RETAINING STRAPS AND CHANNEL GROUP | 5-22 |
| 5-5 | AIR CLEANER BLOWER MOTORS | 5-25 |
| 5-6 | FUEL TANK HEATSHIELD | 5-36 |

## 5-1 ELECTRIC FUEL PUMPS

This task covers: a. Disassembly b. Inspection and Repair c. Assembly

**INITIAL SETUP**

**Tools**
General mechanic's tool kit (item 14, Appx C)
Multimeter (item 16, Appx C)

**Materials/Parts**
Gasket (item 85, Appx F)
Gasket (item 86, Appx F)
Lockwashers (3) (item 30, Appx F)
Lockwashers (4) (item 31, Appx F)
Preformed packing (item 16, Appx F)

**References**
TM 9-2350-311 -20-1

**Equipment Conditions**
Electric fuel pump and hanger assembly removed (TM9-2350-311-20-1)

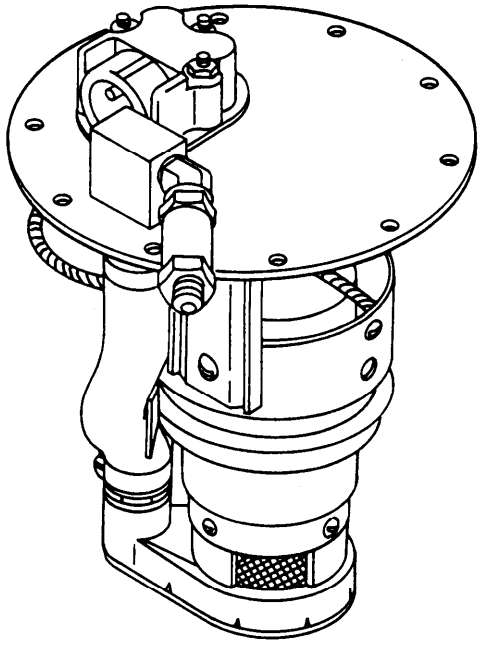

LEFT ELECTRIC FUEL PUMP AND HANGER ASSEMBLY

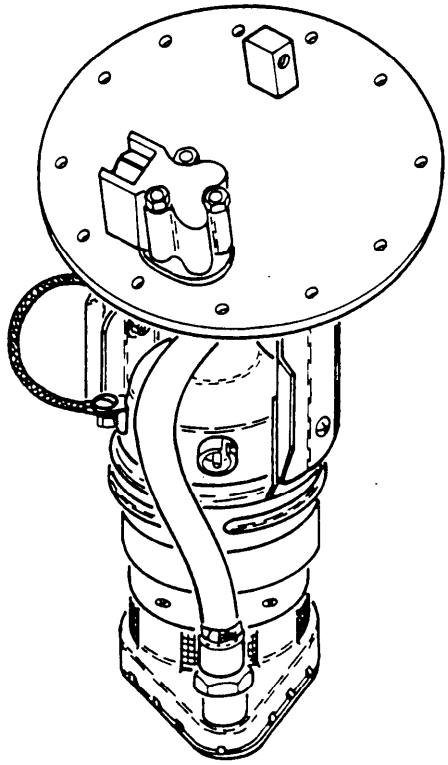

RIGHT ELECTRIC FUEL PUMP AND HANGER ASSEMBLY

**a. Disassembly**

**WARNING**

Do not smoke or use open flame when working on fuel systems. An explosion may occur, causing severe injury or death.

**NOTE**

- Left and right electric fuel pumps have same basic components and are disassembled in same sequence. Right electric fuel pump has canted hanger plate and left electric fuel pump has elbow connector between check valve and hanger discharge fitting. For purposes of this manual, disassembly of left electric fuel pump will be discussed.

Ž Elbow connector is on left fuel pump only.

1 Remove check valve (1) and elbow connector (2) from pump hanger discharge fitting (3).

2 Disconnect shielded electrical cable (4) at cover assembly (5) and remove from electric fuel pump (6).

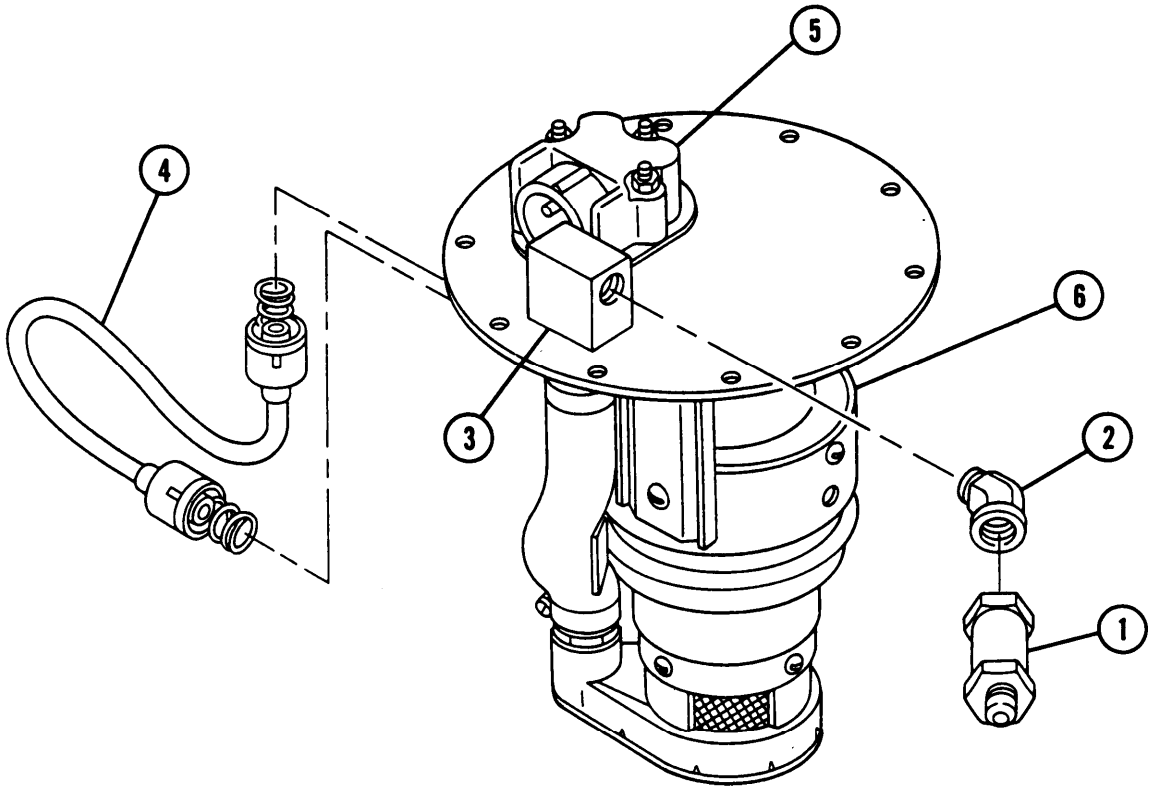

## 5-1 ELECTRIC FUEL PUMPS — CONTINUED

### a. Disassembly — Continued

3 Remove three nuts (7), three lockwashers (8), cover assembly (5), gasket (9), terminal plate (10), and gasket (11). Discard lockwashers and gaskets.

4 Loosen nut (12) and remove nut (13) and serrated washer (14).

5 Remove discharge fitting (3) and preformed packing (15). Discard preformed packing.

6 Loosen clamp (16).

7 Remove hose (17) and clamp (16).

8 Remove two screws (18), two nuts (19), and four lockwashers (20) from hanger assembly (21) and fuel pump (6). Discard lockwashers.

9 Remove ground lead (22).

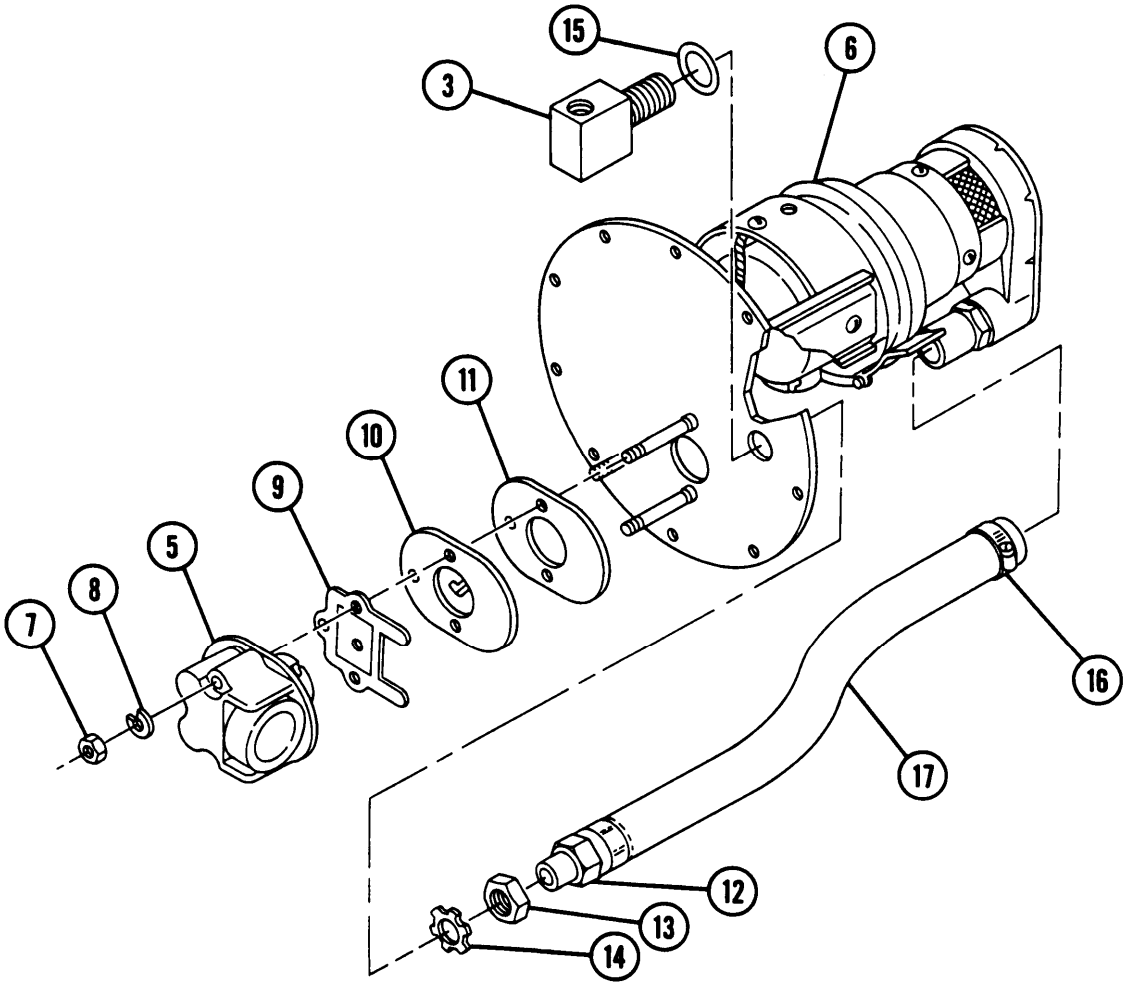

10 Pull latch (23) open.

11 Separate fuel pump (6) and hanger assembly (21).

**NOTE**

No further disassembly of fuel pump is possible. If fuel pump is defective, replace pump (TM 9-2350-311-20-1 ).

**b. Inspection and Repair**

**WARNING**

Do not smoke or use open flame when working on fuel systems. An explosion may occur, causing severe injury or death.

1 Troubleshoot electric fuel pump (6) (TM 9-2350-311-20-1).

2 Inspect electric fuel pump housing (24). Replace if damaged or defective.

3 Inspect inlet screens (25). Clean if clogged.

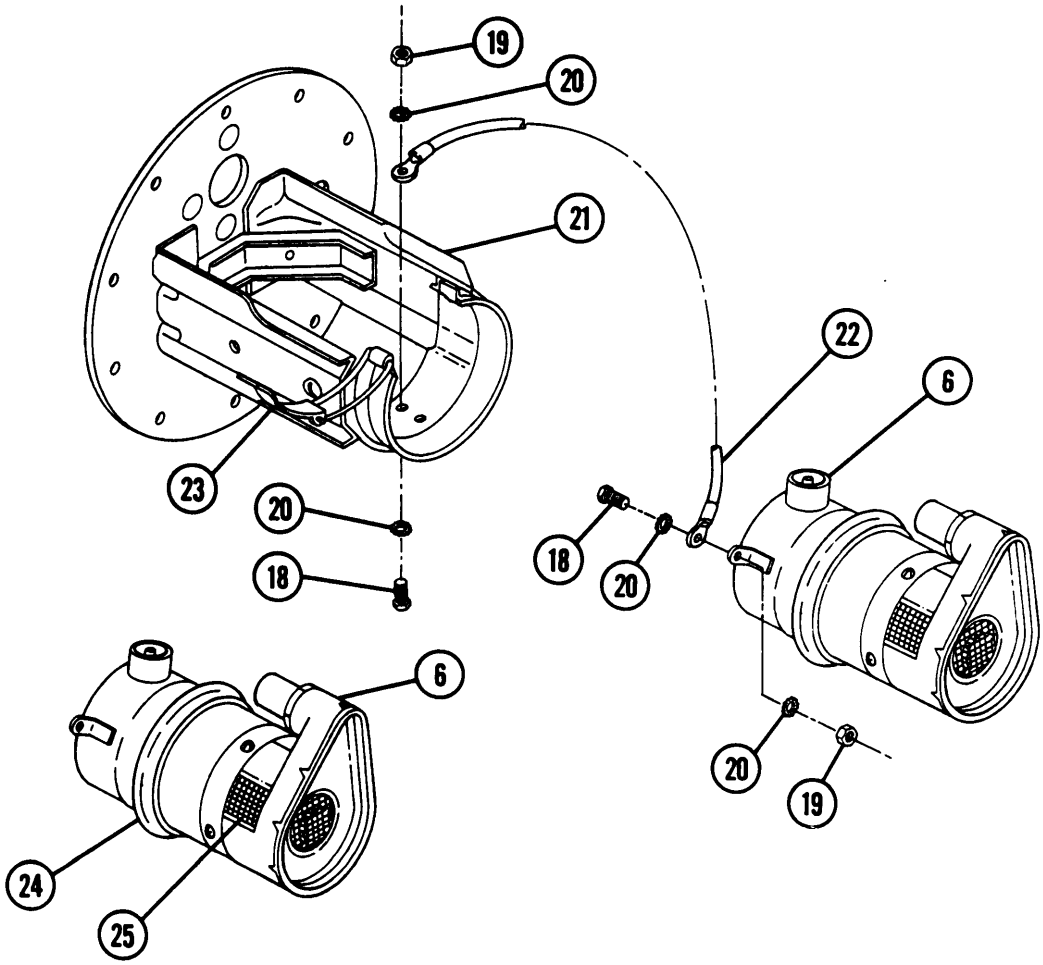

## 5-1 ELECTRIC FUEL PUMPS — CONTINUED

**b. Inspection and Repair — Continued**

4 Perform fuel flow test (TM 9-2350-311 -20-1 ). Replace pumps if not within performance specifications.

5 Inspect shielded electrical cable (4). Replace if shorted, torn, or frayed.

6 Test electrical cable (4) for continuity (TM 9-2350-311 -20-1 ). Replace if damaged.

7 Inspect ground lead (22). Replace if tom, frayed, damaged, or defective.

8 Test ground lead (22) for continuity (TM 9-2350-311 -20-1 ). Replace if shorted.

9 Inspect cover assembly (5). Replace if damaged or deteriorated.

10 Test cover assembly (5) for continuity between terminal and terminal plate (10) (TM 9-2350-311-20-1).

11 Inspect hanger assembly (21 ). Replace if damaged.

12 Inspect pump hanger discharge fitting (3). Replace if damaged or defective.

13 Test operation of check valve (1) (TM 9-2350-311-20-1), Replace if defective.

14 Inspect hose (17). Replace if cracked or deteriorated.

15 Inspect all other components for damage. Replace if damaged.

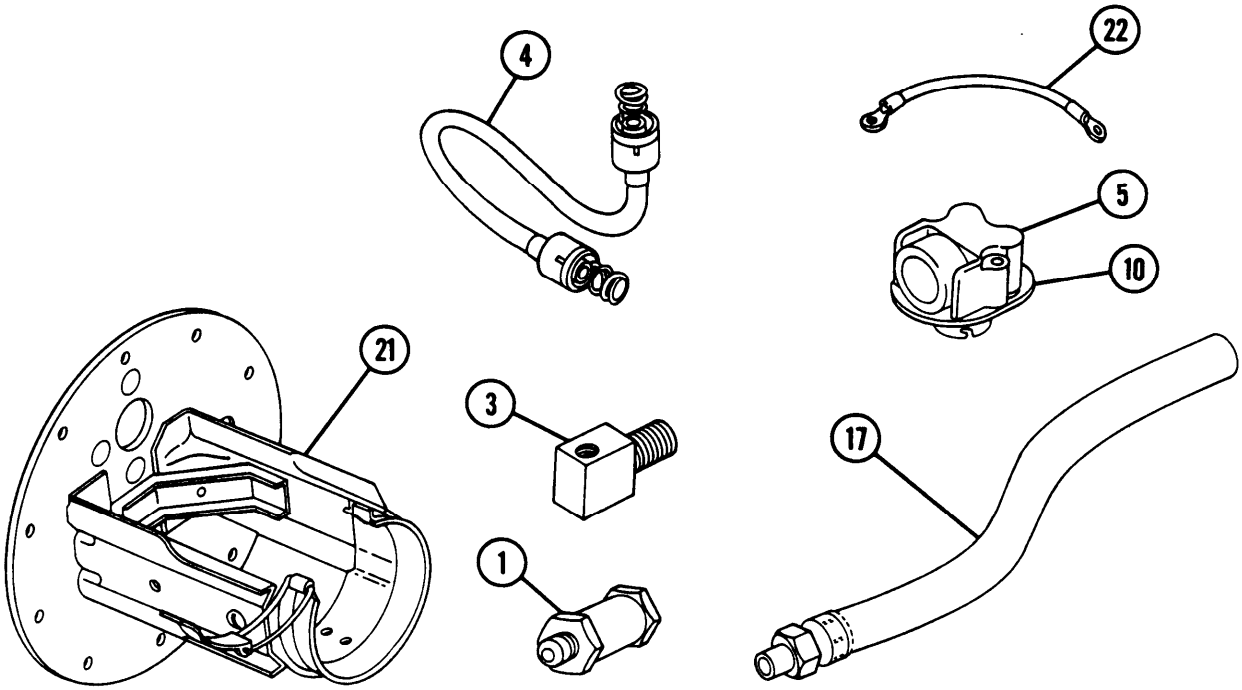

**c. Assembly**

**WARNING**

Do not smoke or use open flame when working on fuel systems. An explosion may occur, causing severe injury or death.

**NOTE**

Left and right electric fuel pumps have same basic components and are assembled in same sequence. Right electric fuel pump has canted hanger plate and left electric fuel pump has an elbow connector between check valve and hanger discharge fitting. For purposes of this manual, assembly of left fuel pump will be discussed.

1 Place electric fuel pump (6) in hanger assembly (21).

2 Close latch (23).

3 install ground lead (22).

4 Install four new Iockwashers (20), two nuts (19), and two screws (18) to fuel pump (6) and hanger assembly (21).

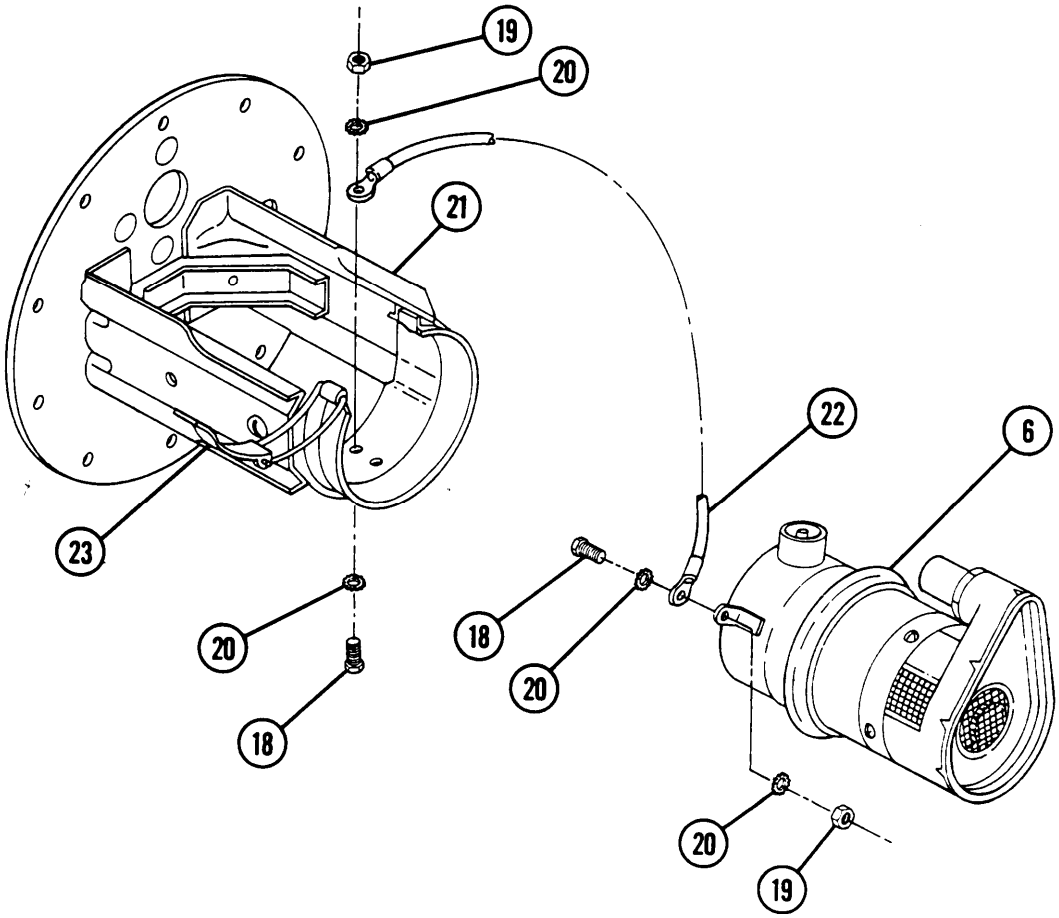

## 5-1 ELECTRIC FUEL PUMPS — CONTINUED

**c. Assembly — Continued**

5 Install hose (17) and clamp (16) to fuel pump (6).

6 Tighten clamp (16).

7 Install new preformed packing (15) and pump hanger discharge fitting (3).

8 Install serrated washer (14) and nut (13) to discharge fitting (3).

9 Tighten nut (12) back onto discharge fitting (3).

10 Install new gasket (11 ), terminal plate (10), new gasket (9), cover assembly (5), three new lockwashers (8), and three nuts (7).

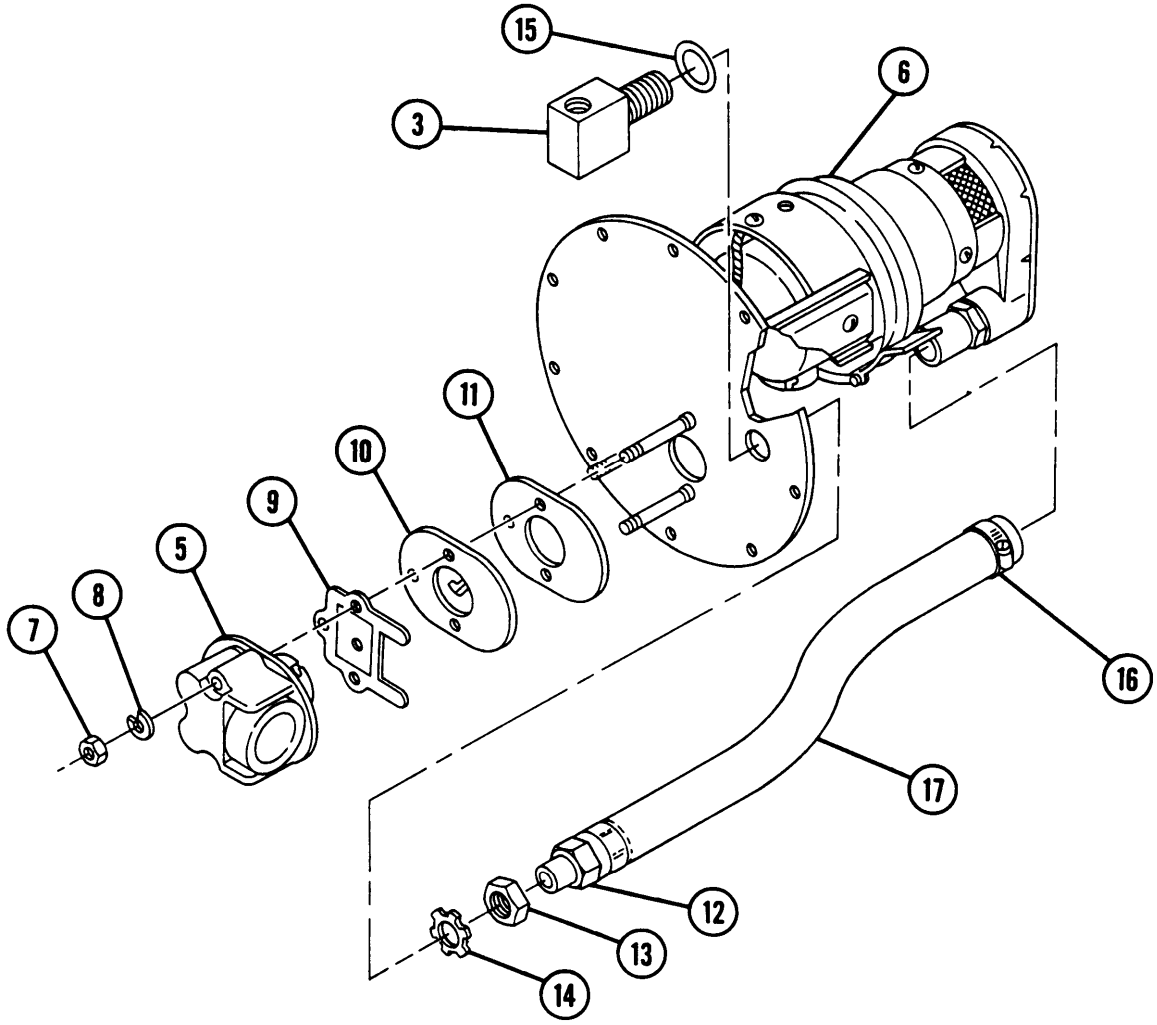

11 Connect shielded electrical cable (4) to cover assembly (5) and install at fuel pump (6).

**NOTE**

Elbow connector is on left fuel pump only.

12 Install elbow connector (2) and check valve (1) at discharge fitting (3).

13 Perform fuel flow test (TM 9-2350-311-20-1).

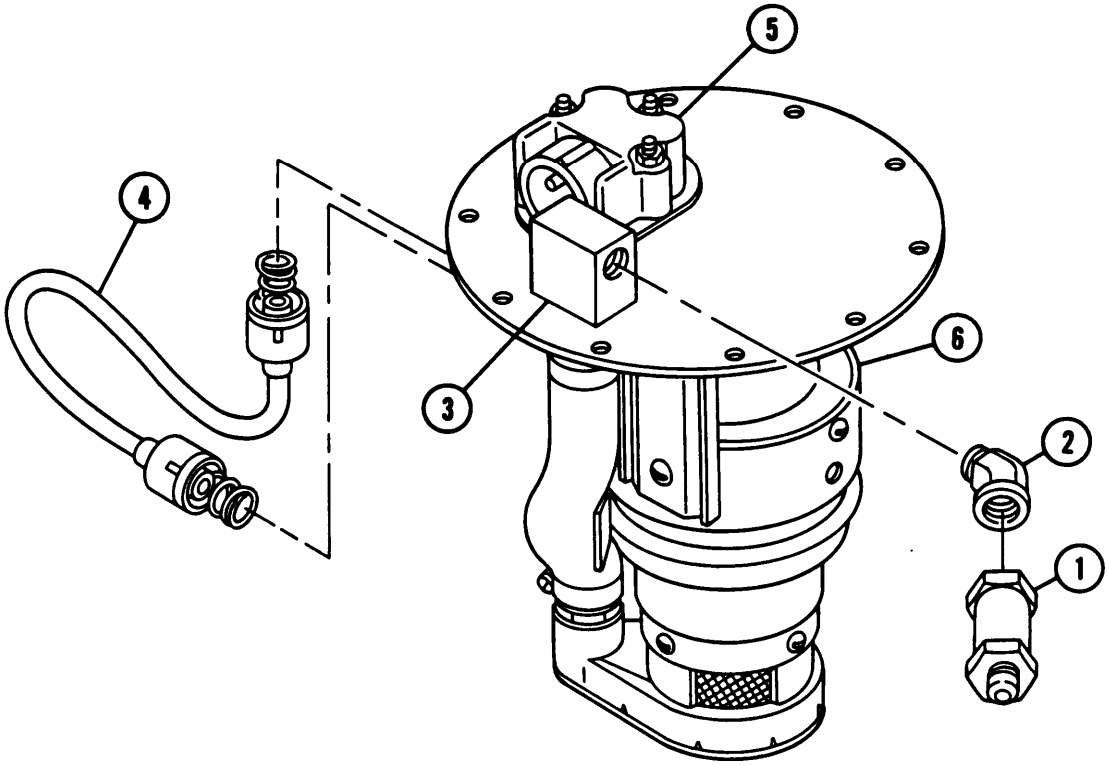


**N O T E**

FOLLOW-ON MAINTENANCE: Install electric fuel pump and hanger assembly (TM9-2350-311-20-1)

## 5-2 FUEL TANKS

This task covers: a. Removal b. Repair co Installation

**INITIAL SETUP**

**Tools**
General mechanic's tool kit (item 14, Appx C)
Adapter (item 1, Appx C)
Fuel hose extension (item 8, Appx C)
Lifting sling (item 22, Appx C)
Suitable container(s)
Torque wrench (item 28, Appx C)

**Materials/Parts**
Coating, white (CARC) (item 6, Appx B)
Dry-cleaning solvent (item 7, Appx B)
Naphtha (item 11, Appx B)
Plastic repair kit (for repairs over 1 in. [25.4 mm]) (item 17, Appx B)
Plastic repair kit (for repairs under 1 in. [25.4 mm]) (item 18, Appx B)
Primer coating (CARC) (item 14 or 15, Appx B)

**Personnel Required**
Two

**References**
TM 9-2350-311-10
TM 9-2350-311 -20-1

**Equipment Conditions**
Powerplant removed (TM 9-2350-311-20-1)

### a. Removal

**WARNING**

- Do not smoke or use open flame when working on fuel systems. An explosion may occur, causing severe injury or death.
- Fuel is hazardous waste and must be disposed of in accordance with local procedures or direction of the local Hazardous Waste Management office.

**NOTE**

Draining fuel tanks manually allows draining in less than 30 minutes. Vehicle must be driven over maintenance pit providing required clearance to fit 55-gal (208-L) containers under vehicle. Draining fuel tanks using electric fuel pumps requires 1.5 to 2 hours.

1 Drain fuel tank manually (TM 9-2350-311-10) or use the following electric fuel pump method:

(a) Connect battery ground cables after powerplant is removed (TM 9-2350-311-20-1).

(b) Attach adapter (1) and fuel hose extension (2) to main fuel line (3) at quick disconnect (4).

(c) Move MASTER switch to on to activate fuel pumps (5) and drain fuel into suitable container.

(d) Move MASTER switch to OFF when fuel pumps (5) stop pumping fuel.

(e) Detach adapter (1) and fuel hose extension (2) to main fuel line (3) at quick disconnect (4).

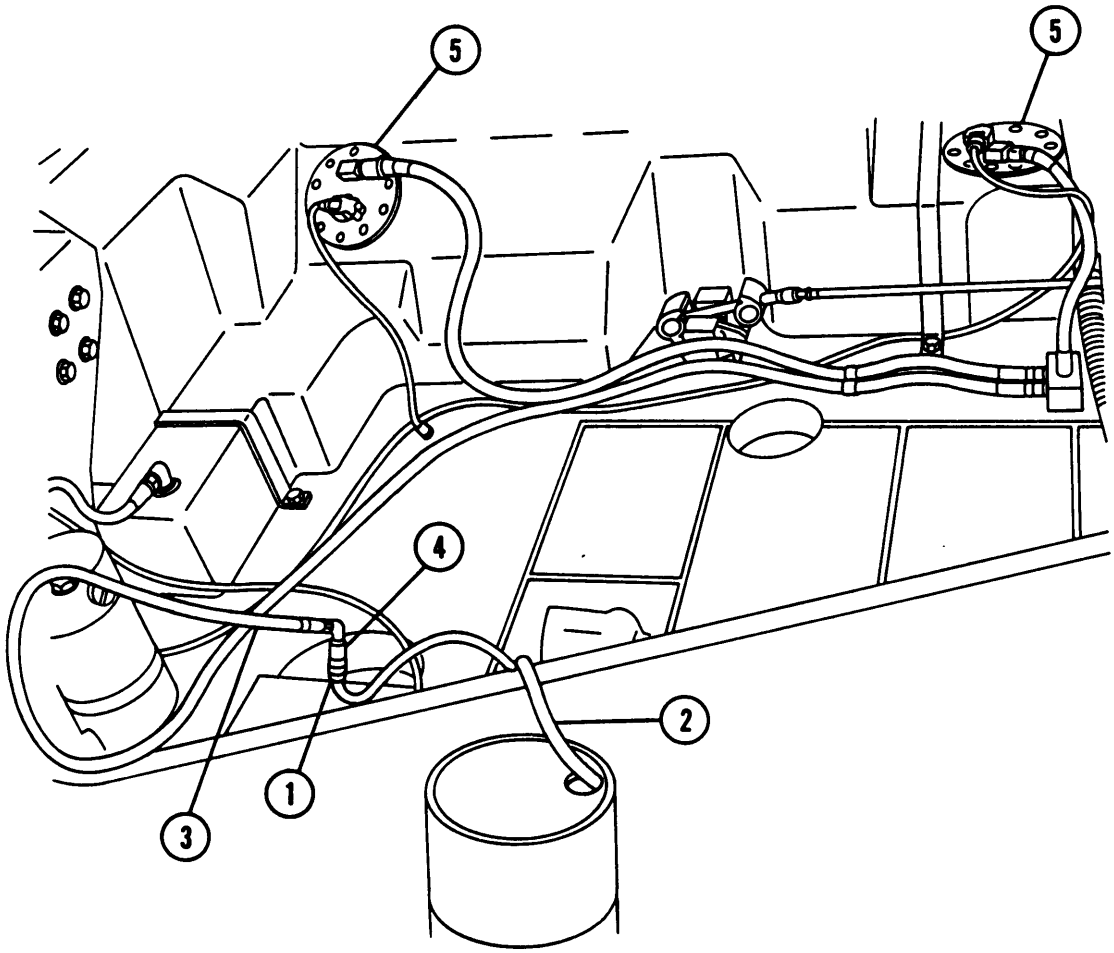

## 5-2 FUEL TANKS — CONTINUED

2 Remove engine exhaust outlet tube and pipe (6) (TM 9-2350-311 -20-1 ).

3 Remove air cleaner duct and elbow (7) (TM 9-2350-31 1-20-1).

4 Remove fuel tank heat shield (8) (TM 9-2350-311 -20-1 ).

5 Disconnect two electrical connectors (9) at fuel pumps (5) (TM 9-2350-311-20-1).

6 Disconnect two electrical connectors (10) at fuel level transmitters (11 ) (TM 9-2350-311-20-1).

7 Remove fuel level transmitters (11 ) (TM 9-2350-311-20-1).

8 Disconnect hoses and tubes (12) (TM 9-2350-311 -20-1 ).

9 Remove two fuel pumps (5) (TM 9-2350-311 -20-1 ).

10 Remove filler assembly (13) (TM 9-2350-311 -20-1 ).

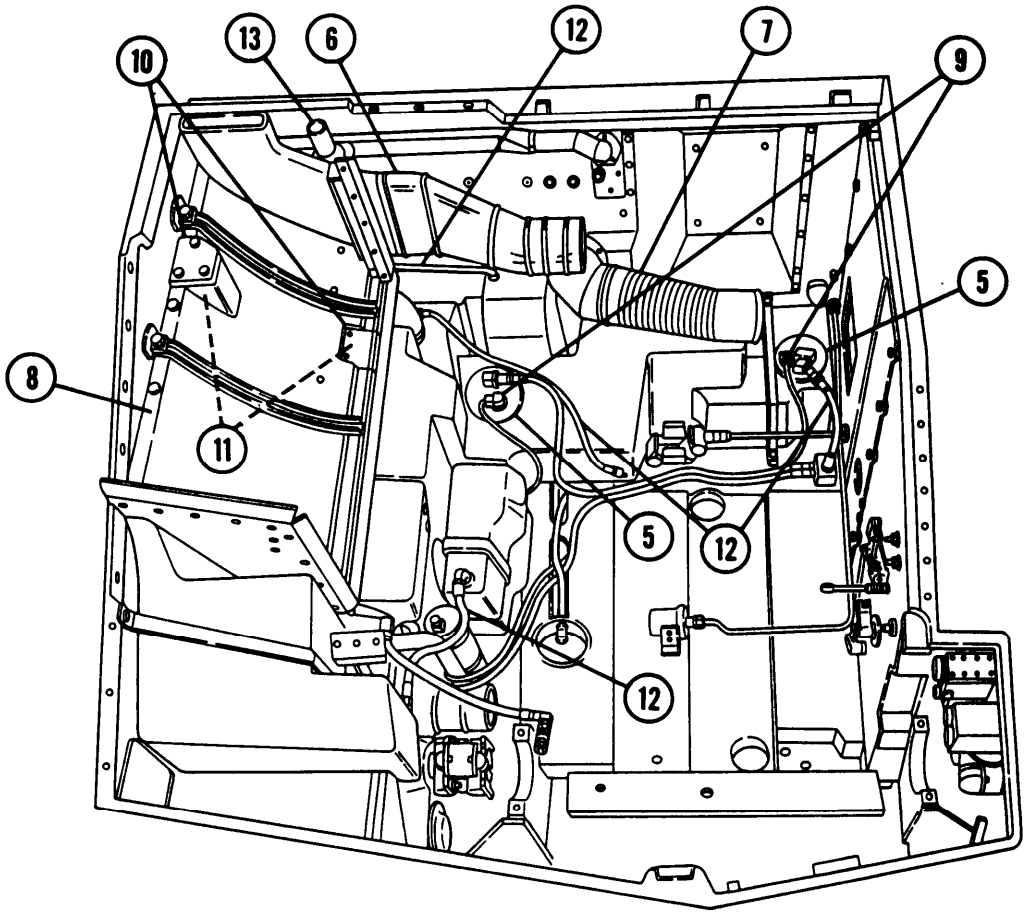

11 Loosen turnbuckle (14) by reaching through filler opening (15).

12 Remove two screws (16), two flat washers (17), and retaining strap (18) at front of upper fuel tank (19).

13 Pull upper fuel tank (19) outward towards front of vehicle to clear hull recess, then lift out of hull.

14 Remove four screws (20), four flat washers (21 ), and two retaining straps (22).

15 Lift lower fuel tank (23) over engine mount assembly (24) and remove from vehicle.

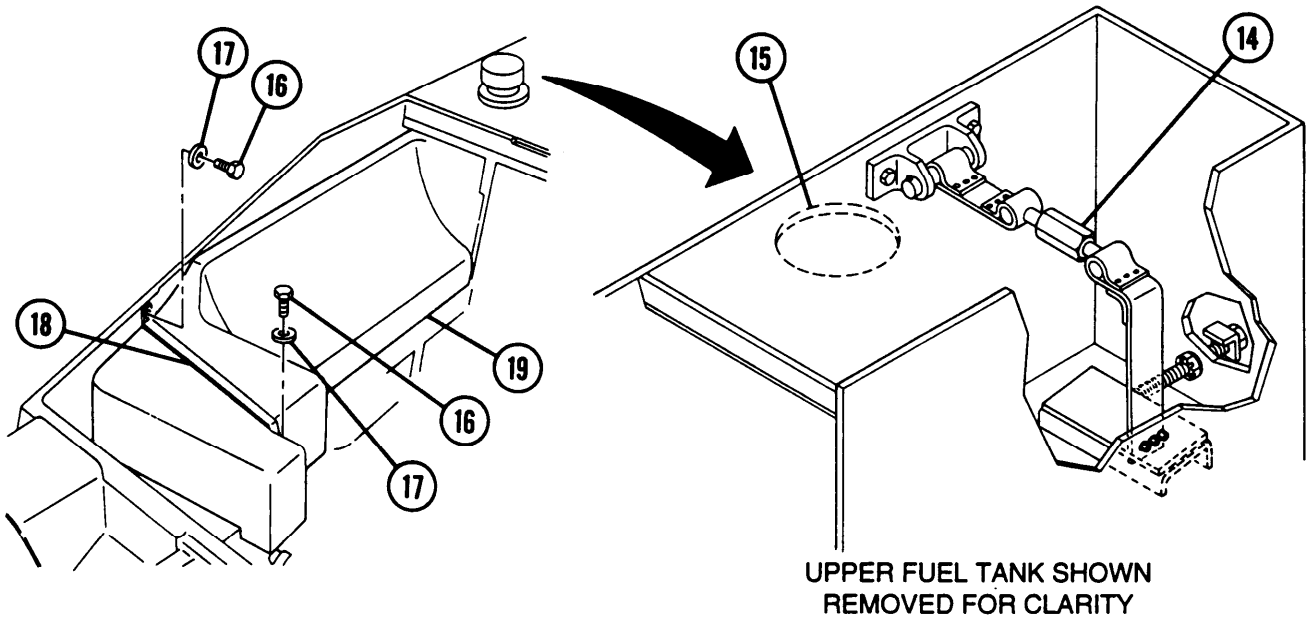


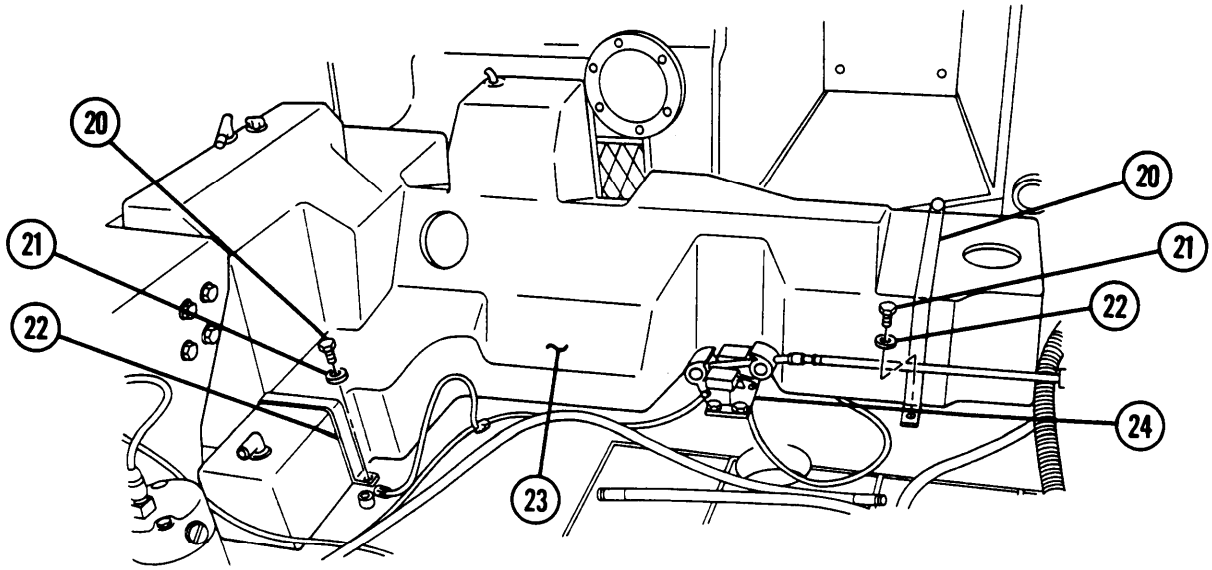

## 5-2 FUEL TANKS — CONTINUED

**b. Repair**

**WARNING**

- Do not smoke or use open flames when removing tanks. Wear respirator and rubberized protective clothing when working on fiberglass. Fiberglass inhalation can cause severe respiratory problems. Fiberglass particles embedded in skin will cause irritation and possible infection.
- Immediately after working with fiberglass and resin, thoroughly wash any exposed skin surfaces. If fiber particles are imbedded in skin, do not scrub. Rinse area in warm, soapy water and seek medical assistance.

**NOTE**

- Upper and lower fuel tanks are repaired using same procedures.
- Applying fiberglass and epoxy repair materials in cold shop retards curing.
- Steps 1 thru 20 apply to tanks with repair holes larger than 1 in. (2.54 cm). Steps 21 thru 27 apply to tanks with cracks or punctures smaller than 1 in. (25.4 mm).

1 For holes larger than 1 in. (2.54 cm) across at any point, cut away damaged area. Make a smooth-edged circular opening. Sharp angular cuts make repair more difficult.

2 Scarf crater with at least 1.5 in. (3.81 cm) sloping sides, down to opening.

**WARNING**

Dry-cleaning solvent (P-D-880) is toxic and flammable. Wear protective goggles and gloves and use only in a well-ventilated area. Avoid contact with skin, eyes, and clothes. Do not breath vapors. Do not use near open flame or excessive heat. The flashpoint for type #1 is 100°F (38°C), and for type #2 is 138°F (59°C). If you become dizzy while using dry-cleaning solvent, get fresh air immediately and obtain medical aid. If contact with eyes is made, wash your eyes with water and obtain medical aid immediately.

3 Remove dust and clean repair area with dry-cleaning solvent.

NOTE

Presence of oil in repair area will result in poor adhesion.

4 Use 0.125 in. (3.2 mm) application of regenerated silica compacted under warm pad to withdraw oil for improved adhesion.

5 Measure repair area and estimate material requirement.

**NOTE**

If damaged area is near opening in tank, apply backing plate with masking tape and release film, rather than using cloth wire.

6 Cut and trim piece of wire screen slightly larger than opening. If opening is less than 1 in. (25.4 mm) across at greatest point, wire screen is not required.

7 Cut glass cloth patches to size and shape. Cut first patch 0.5 in. (13 mm) larger until sufficient cloth has been built up to make patched area level with surrounding tank wall (usually six or seven patches).

8 Mix resin and hardener as directed on can label.

9 Thoroughly saturate scarfed area and wire screen with cement and apply screen over opening.

10 Remove about 20% of cement from mixing container. Fold in small amount of regenerated silica to obtain putty-like consistency. Use this mixture to apply first two layers of glass cloth.

11 Thoroughly saturate smallest glass cloth with putty-like cement and place it over screen.

**NOTE**

Apply release film and work out air pockets after each lamination. Work from center of patch outward.

12 Place piece of release film on patch and work out air pockets from center of patch outward.

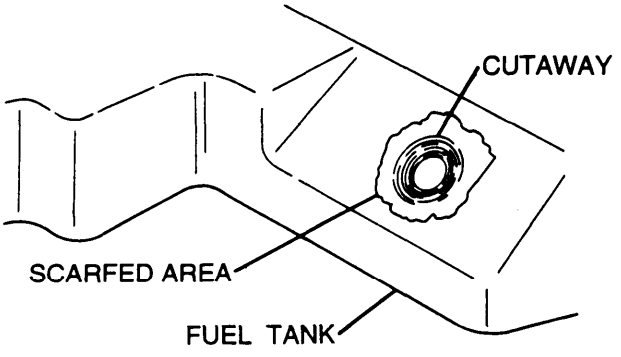


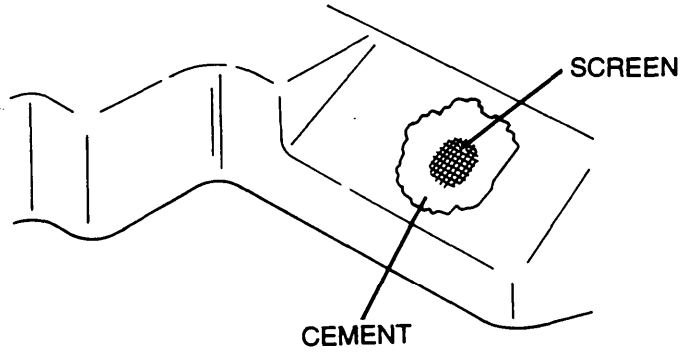


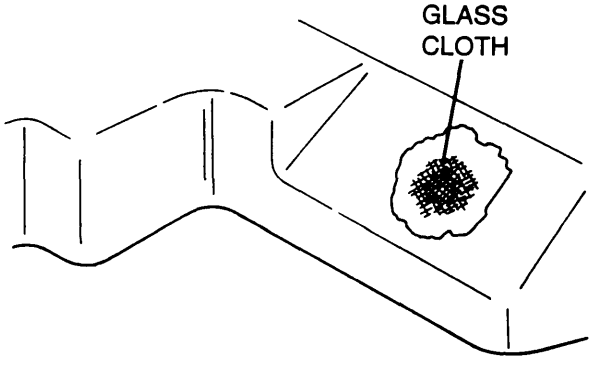


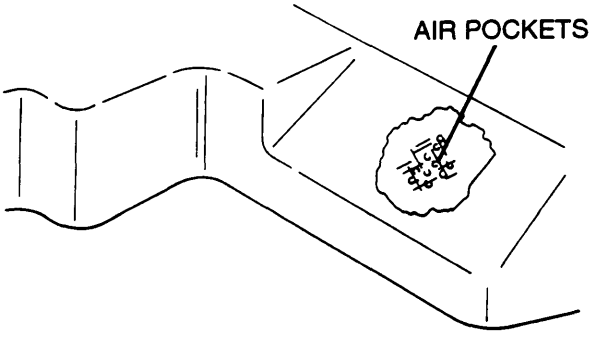

## 5-2 FUEL TANKS — CONTINUED

**b. Repair — Continued**

13 Remove release film.

14 Repeat this procedure for application of second patch.

15 Saturate remaining patches with mixture without silica and apply to crater.

16 Allow completed patch to set undisturbed for 16 to 24 hours.

**NOTE**

Cure will be slow in temperatures below 70°F (21°C). However, during first hour of cure, temperature should not exceed 100°F (38°C).

17 To cure in about 4 hours, after patch has cured for 1 hour, place heat lamp over patch and gradually increase intensity. Keep lamp at least 2 ft (0.6 m) from patch and do not allow temperature to exceed 250°F (121°C).

**WARNING**

- Naphtha is flammable. Do not smoke or allow open flames in areas where naphtha is being used to avoid possible explosion or injury.
- Chemical Agent Resistant Coating (CARC) paint contains isocyanate, a constituent that can cause respiratory effects during and after the application of the material. CARC paint may produce itching and reddening of the skin, a burning sensation of the throat and nose, and watering of the eyes. Refer to TM 9-2350-311-20-1 for complete CARC handling instructions.

18 When cure is complete, sand patch flush with surrounding surface. Clean with naphtha and paint fuel tanks (TM 9-2350-31 1-20-1).

**WARNING**

Compressed air used for cleaning purposes must not exceed 30 psi (207 kPa). Use only with effective chip guarding and personal protective equipment (goggles/shield, gloves, etc).

19 Pressure test repaired tank using low-pressure compressed air at 3 psi (21 kPa).

20 Thoroughly flush tank and dry with low-pressure compressed air.

**NOTE**

Steps 21 thru 25 apply to tanks with holes 1 in. (25.4 mm) across at any point.

**WARNING**

- Naphtha is flammable. Do not smoke or allow open flames in areas where naphtha is being used to avoid possible explosion or injury.

- Dry-cleaning solvent (P-D-680) is toxic and flammable. Wear protective goggles and gloves and use only in a well-ventilated area. Avoid contact with skin, eyes, and clothes. Do not breath vapors. Do not use near open flame or excessive heat. The flashpoint for type #1 is 100°F (38°C), and for type #2 is 138°F (59°C). If you become dizzy while using dry-cleaning solvent, get fresh air immediately and obtain medical aid. If contact with eyes is made, wash your eyes with water and obtain medical aid immediately.

21 Scarf crater and clean area to be repaired (steps 2 and 3).

22 Mix sufficient cement to cover hole by following instructions on cement can. Apply cement directly to puncture or crack (fill entire scarfed area).

**NOTE**

A small amount of regenerated silica maybe mixed with cement for added consistency if desired.

23 Allow patch to cure 16 to 24 hours.

**WARNING**

Compressed air used for cleaning purposes must not exceed 30 psi (207 kPa). Use only with effective chip guarding and personal protective equipment (goggles/shield, gloves, etc).

24 Pressure test, flush, and dry repaired tank (steps 19 and 20).

**WARNING**

- Naphtha is flammable. Do not smoke or allow open flames in areas where naphtha is being used to avoid possible explosion or injury.

- CARC paint contains isocyanate, a constituent that can cause respiratory effects during and after the application of the material. CARC paint may produce itching and reddening of the skin, a burning sensation of the throat and nose, and watering of the eyes. Refer to TM 9-2350-311-20-1 for complete handling instructions.

25 Sand patch smooth, clean with naphtha and paint fuel tanks (para 2-14).

**NOTE**

Before installing fuel tanks, perform required maintenance on fuel tanks, retaining straps, tumbuckle, and pads (para 5-3 and para 5-4).

## 5-2 FUEL TANKS — CONTINUED

### c. Installation

1 Lower lower fuel tank (23) into position behind engine mount assembly (24) and install shim washers under retaining straps as required.

**NOTE**

Steps 2 thru 4 apply to upper fuel tank.

2 Lower upper fuel tank (19) into hull and push towards rear of vehicle into hull recess.

**NOTE**

Access nut and screw from inside of vehicle.

3 Retract channel (25), hold nut (26), and loosen screw (27).

4 Ensure upper fuel tank (19) position will aline with crossover tube and filler assembly when installed.

5 Install retaining strap (18), two flat washers (17), and two screws (16).

**NOTE**

Steps 6 and 7 apply to upper fuel tank.

6 Tighten turnbuckle (14).

7 Use screwdriver to extend channel (25) to fit against upper fuel tank (19). Torque nut .(26) to 10 Ib-ft (13.5 N•m). Turn screw (27) to position channel.

8 Lower lower fuel tank (23) under engine mount assembly (24) and install into vehicle.

9 Install two retaining straps (22), four flat washers (21), and four screws (20).

10 Push upper fuel tank (19) inward towards back of vehicle to clear hull recess and position in vehicle.

11 Install retaining strap (18), two flat washers (17), and two screws (16) at front of upper fuel tank (19).

12 Reach through filler opening (15) and tighten tumbuckle (14).

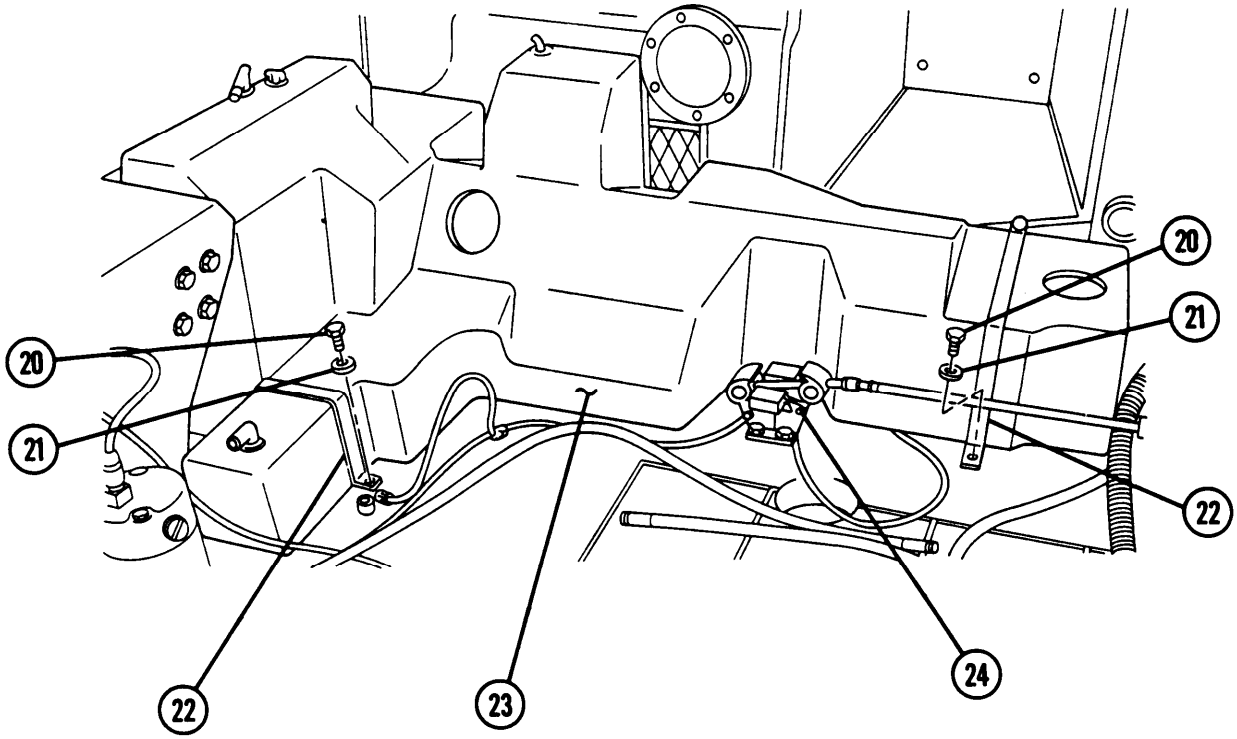


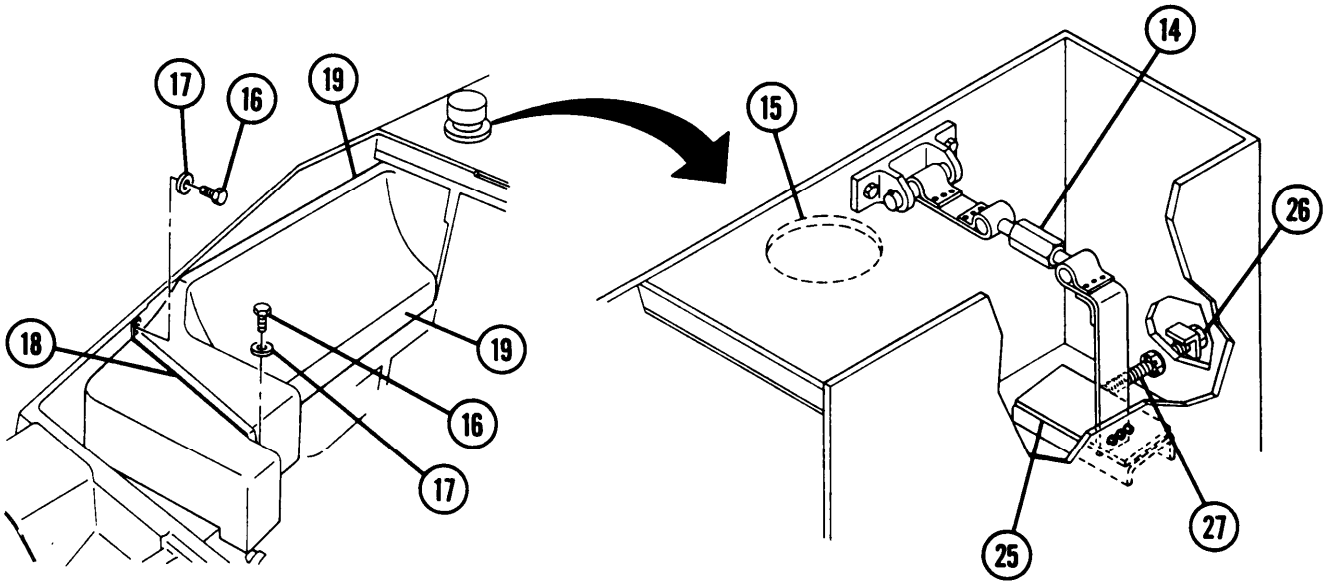


UPPER FUEL TANK SHOWN
REMOVED FOR CLARITY

**NOTE**

FOLLOW-ON MAINTENANCE: Install powerplant (TM 9-2350-311-20-1)

## 5-3 FUEL TANK PADS

This task covers: a. Removal b. Installation

**INITIAL SETUP**

**Tools**
General mechanic's tool kit (item 14, Appx C)
Dry-cleaning solvent (item 7, Appx B)
Sand paper (item 12, Appx B)

**Materials/Parts**
Adhesive (item 2, Appx B)

**Equipment Conditions**
Fuel tanks removed (para 5-2)

### a. Removal

**NOTE**

Remove only pads that are defective and need replacement.

1 Remove hull mounted pads (1) as required. Discard pads.

2 Remove rear retaining strap pad (2) as required (para 5-4). Discard pad.

3 Remove channel pad (3) as required (para 5-4).

**CAUTION**

Use care during removal of fuel tank pads to avoid puncturing or damaging fuel tanks.

4 Remove fuel tank pads (4) as required. Discard pads.

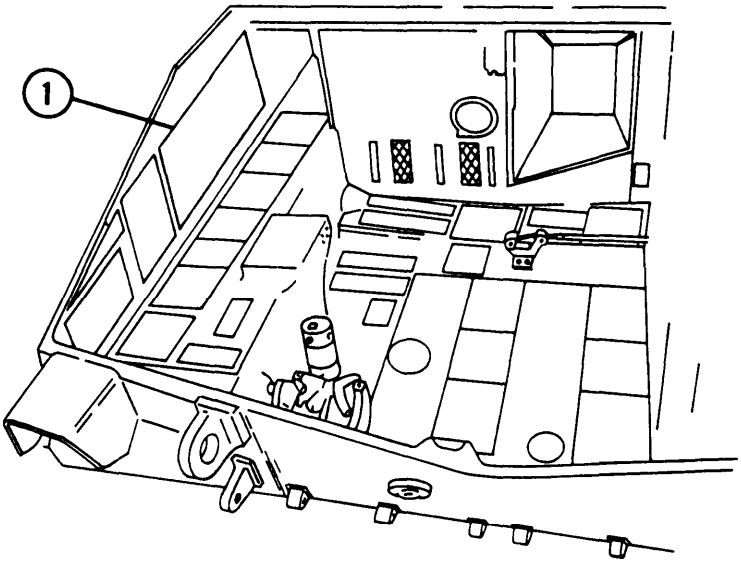

## b. Installation

**WARNING**

- Dry-cleaning solvent (P-D-680) is toxic and flammable. Wear protective goggles and gloves and use only in a well-ventilated area. Avoid contact with skin, eyes, and clothes. Do not breath vapors. Do not use near open flame or excessive heat. The flashpoint for type #1 is 100°F (38°C), and for type #2 is 138°F (59°C). If you become dizzy while using dry-cleaning solvent, get fresh air immediately and obtain medical aid. If contact with eyes is made, wash your eyes with water and obtain medical aid immediately.

- CARC paint contains isocyanate, a constituent that can cause respiratory effects during and after the application of the material. CARC paint may produce itching and reddening of the skin, a burning sensation of the throat and nose, and watering of the eyes. Refer to TM 9-2350-311-20-1 for complete handling instructions.

- Adhesives are toxic and flammable. Apply adhesives only in a well-ventilated area. Avoid contact with skin, eyes, and clothes, and don't breath vapors. Do not use near heat, sparks, or open flame. Read and follow all warnings and instructions on labels of adhesives. If contact with skin or eyes is made, wash area with water and seek medical aid immediately.

1 Clean pad mounting surfaces thoroughly with dry-cleaning solvent and remove all old pad and adhesive residue.

2 Using paint remover or sand paper, remove all paint from mounting surface.

3 Apply adhesive and install new pads (1 thru 4) as required.

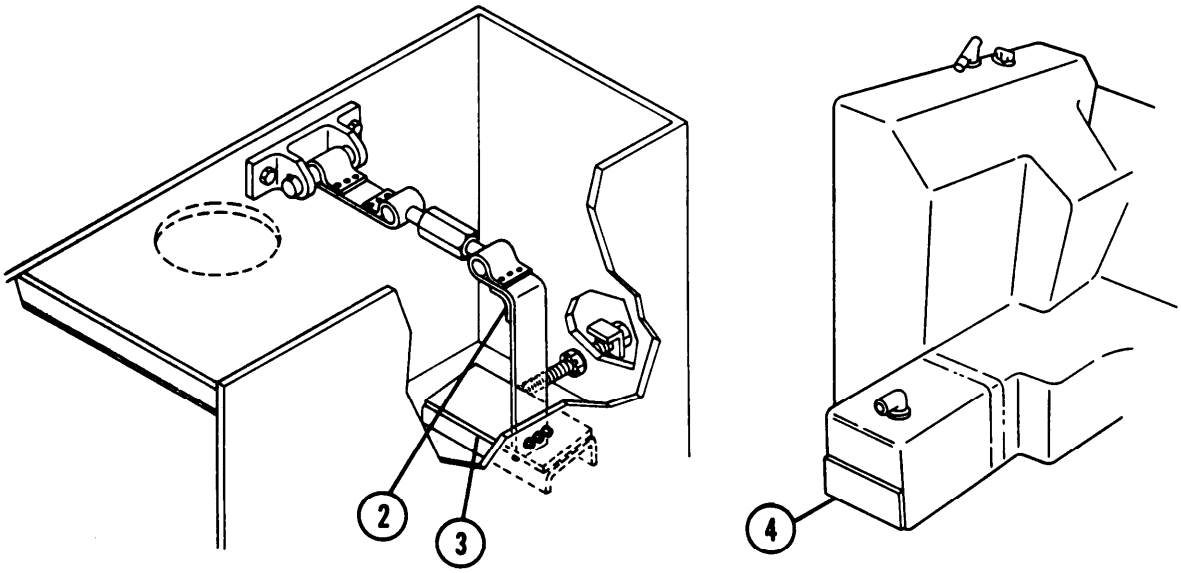


**NOTE**

FOLLOW-ON MAINTENANCE: Install fuel tanks (para 5-2)

## 5-4 FUEL TANK RETAINING STRAPS AND CHANNEL GROUP

This task covers: a. Removal b. Disassembly c. Assembly d. Installation

**INITIAL SETUP**

Tools
General mechanic's tool kit (item 14, Appx C)

Materials/Parts
Cotter pin (item 12, Appx F)
Spring pin (item 2, Appx F)

Equipment Conditions
Upper fuel tank removed (para 5-2)

**a. Removal**

1 Remove cotter pin (1). Discard cotter pin.

2 Remove headed pin (2).

3 Remove three screws (3), three nuts (4), and three flat washers (5).

4. Remove rear retaining strap assembly (6).

5 Remove two screws (7) and bracket (8).

**NOTE**

Nut and retainer are located inside hull crew compartment at forward bulkhead of Cannon Launched Guided Projectile (CLGP) stowage area.

6 Remove nut (9) and retainer (10).

7 Remove channel (11), stud (12), and nut (13) and remove flat washer (14) through hull recess.

**b. Diaaseembly**

1 Unscrew turnbuckle (15) and separate top retaining strap (16) from side retaining strap (17). Discard and replace defective straps or turnbuckle as required.

2 Remove and discard pad (18) if it requires replacement (para 5-3).

3 Remove nut (13) and stud (12) from channel (11). Remove pad (19) if it requires replacement (para 5-3).

4 Remove spring pin (20). Discard spring pin.

5 Remove stud (12) from channel (11).

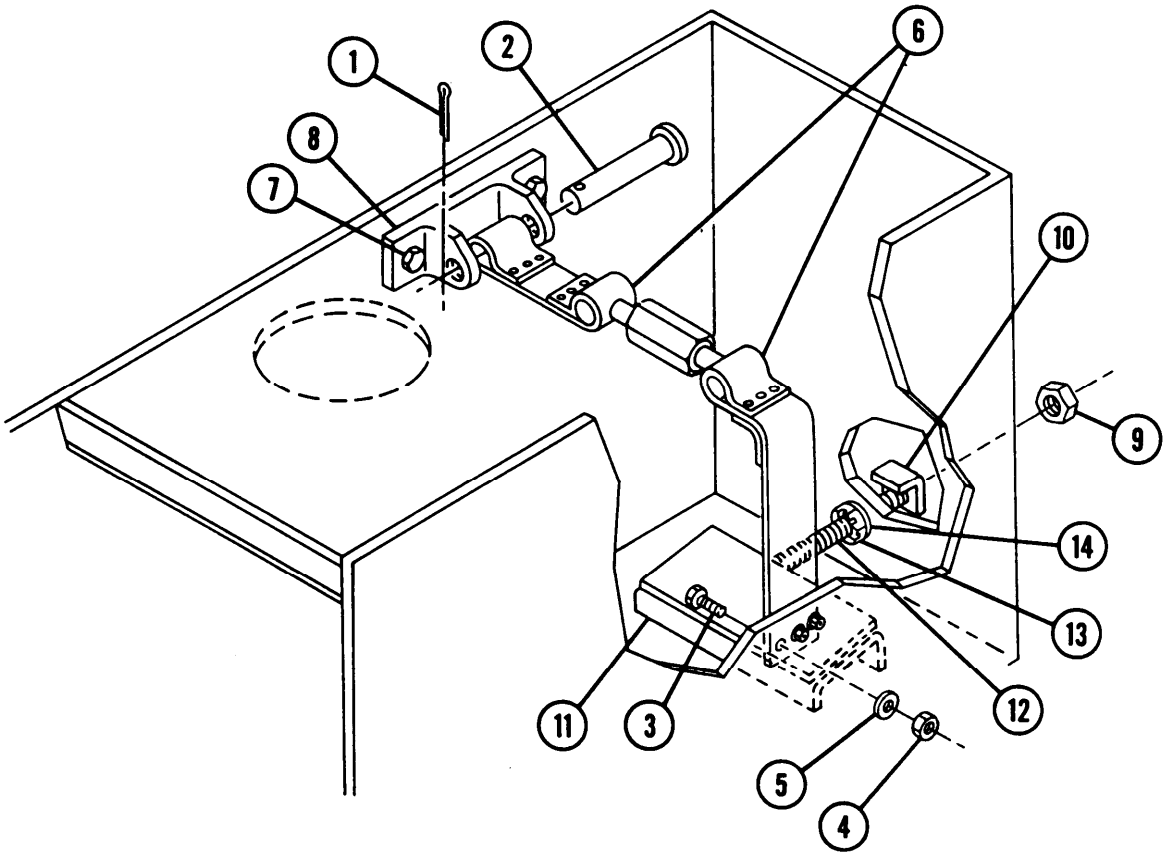
1
2
6
8
7
10
9
14
13
12
11
3
5
4

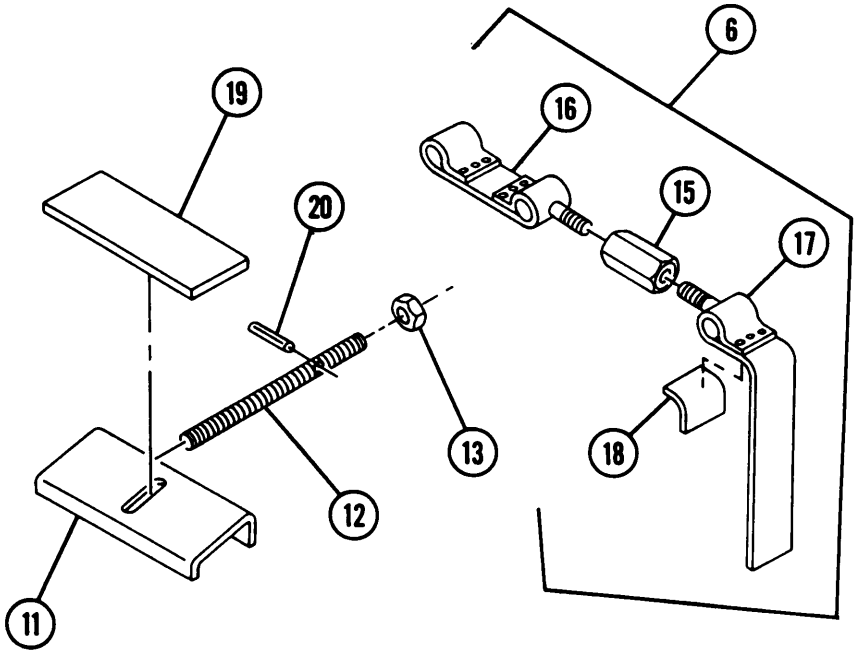
6
19
16
20
15
17
13
18
12
11

## 5-4 FUEL TANK RETAINING STRAPS AND CHANNEL GROUP — CONTINUED

**c. Assembly**

1 Install new pad (18), as required (para 5-3).

2 Connect turnbuckle (15) to side retaining strap (17) and top retaining strap (16).

3 Install new pad (19), as required (para 5-3).

4 Assemble new spring pin (20), stud (12), and nut (13) to channel (11).

**d. Installation**

1 Install flat washer (14), nut (13), stud (12), and channel (11) through hull recess in engine compartment.

**NOTE**

Nut and retainer are located inside hull crew compartment at forward bulkhead of CLGP stowage area.

2 Install retainer (10) and nut (9).

3 Install bracket (8) and two screws (7).

4 Install rear retaining strap assembly (6).

5 Install three flat washers (5), three nuts (4), and three screws (3).

6 Install headed pin (2).

7 Install new cotter pin (1).

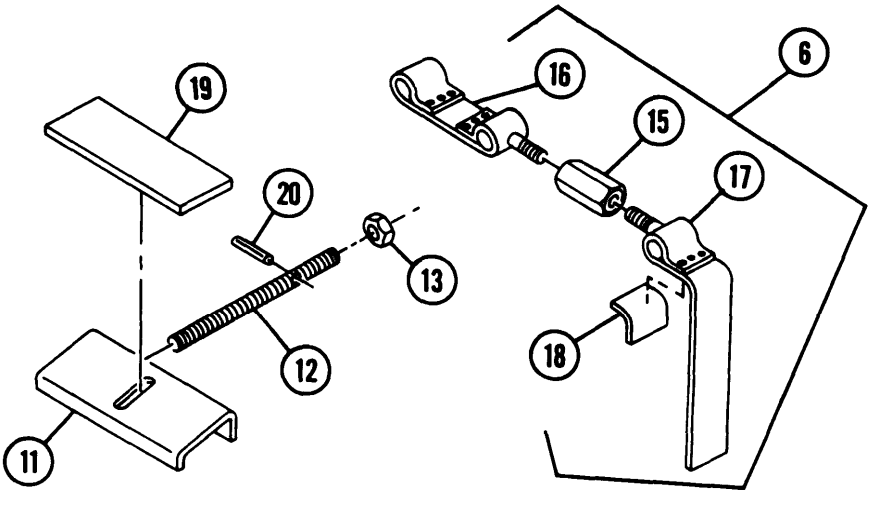

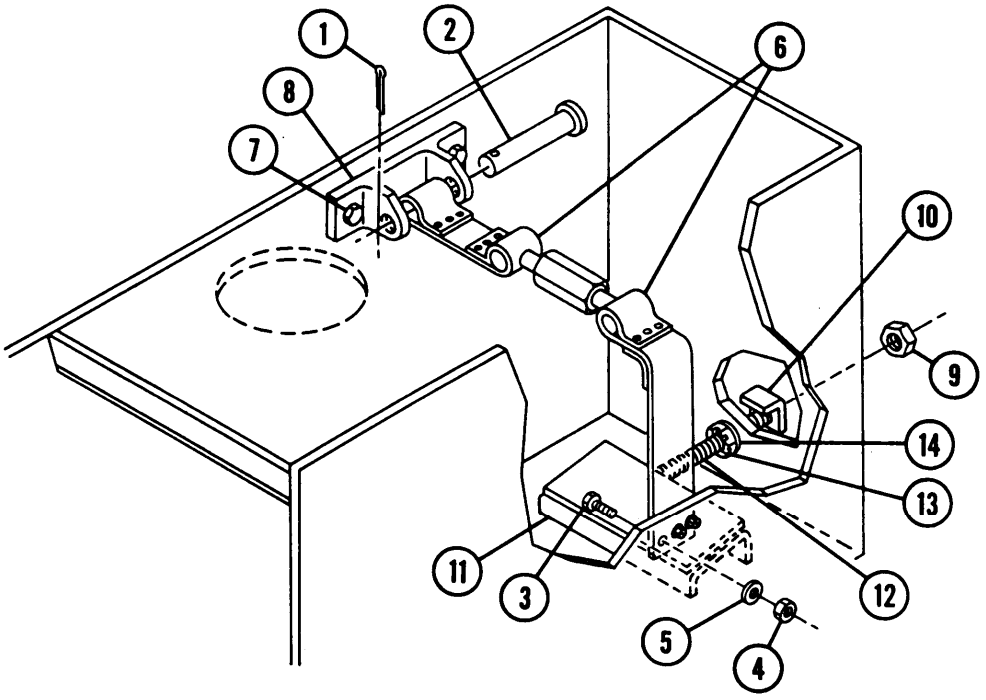


**NOTE**

FOLLOW-ON MAINTENANCE: Install upper fuel tank (para 5-2)

## 5-5 AIR CLEANER BLOWER MOTORS

This task covers: a. Disassembly b. Inspection, Repair, and Test c. Assembly d. Test

**INITIAL SETUP**

**Tools**
General mechanic's tool kit (item 14, Appx C)
Dial indicator (item 4, Appx C)
Growler (item 10, Appx C)
Lathe (item 17, Appx C)
Multimeter (item 16, Appx C)
Soldering gun (item 11, Appx C)

**Materials/Parts**
Adhesive (item 2, Appx B)
Lockwashers (20) (item 79, Appx F)
Preformed packing (item 80, Appx F)
Seal (item 15, Appx F)
Seal (item 18, Appx F)
Self-locking nut (item 11, Appx F)
Solder (item 23, Appx B)
solder flux (item 24, Appx B)

**References**
TB SIG 222
TM 9-214
TM 9-2350-311-10
TM 9-2350-311-20-1

**Equipment Conditions**
Engine coolant system drained (TM 9-2350-311-10)

## 5-5 AIR CLEANER BLOWER MOTORS — CONTINUED

### a. Disassembly

1 Remove 10 screws (1), 10 lockwasher (2), and motor cover (3). Discard lockwasher.

2 Slide electrical lead insulator (4) away from connector (5).

3 Disconnect electrical lead (6) at connector (5).

4 Remove screw (7) and disconnect ground lead (8). Install screw to commutator end bell (9).

5 Remove motor assembly (10) and two seals (11). Discard seals.

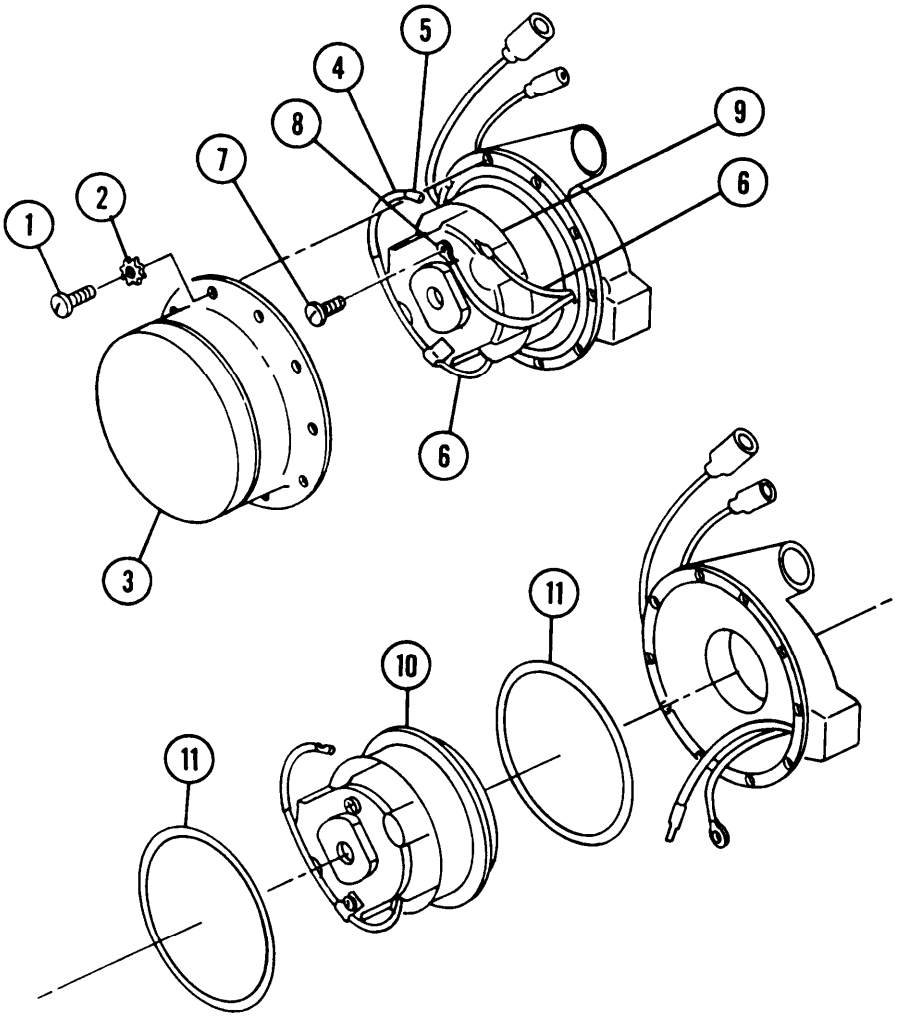

6 Remove screw (12), lockwasher (1), ground lead (8), and clip (14). Install screw (12), lockwasher (13), and clip (14).

7 Remove four screws (15), four lockwasher (16), capacitor lead assembly (17), and preformed packing (18). Discard lockwasher and preformed packing.

**NOTE**

Disassemble only if leads or capacitor lead assembly needs replacing.

8 Disassemble capacitor lead assembly (17), unsoldering leads (19) to disconnect capacitor (20) (TB SIG 222).

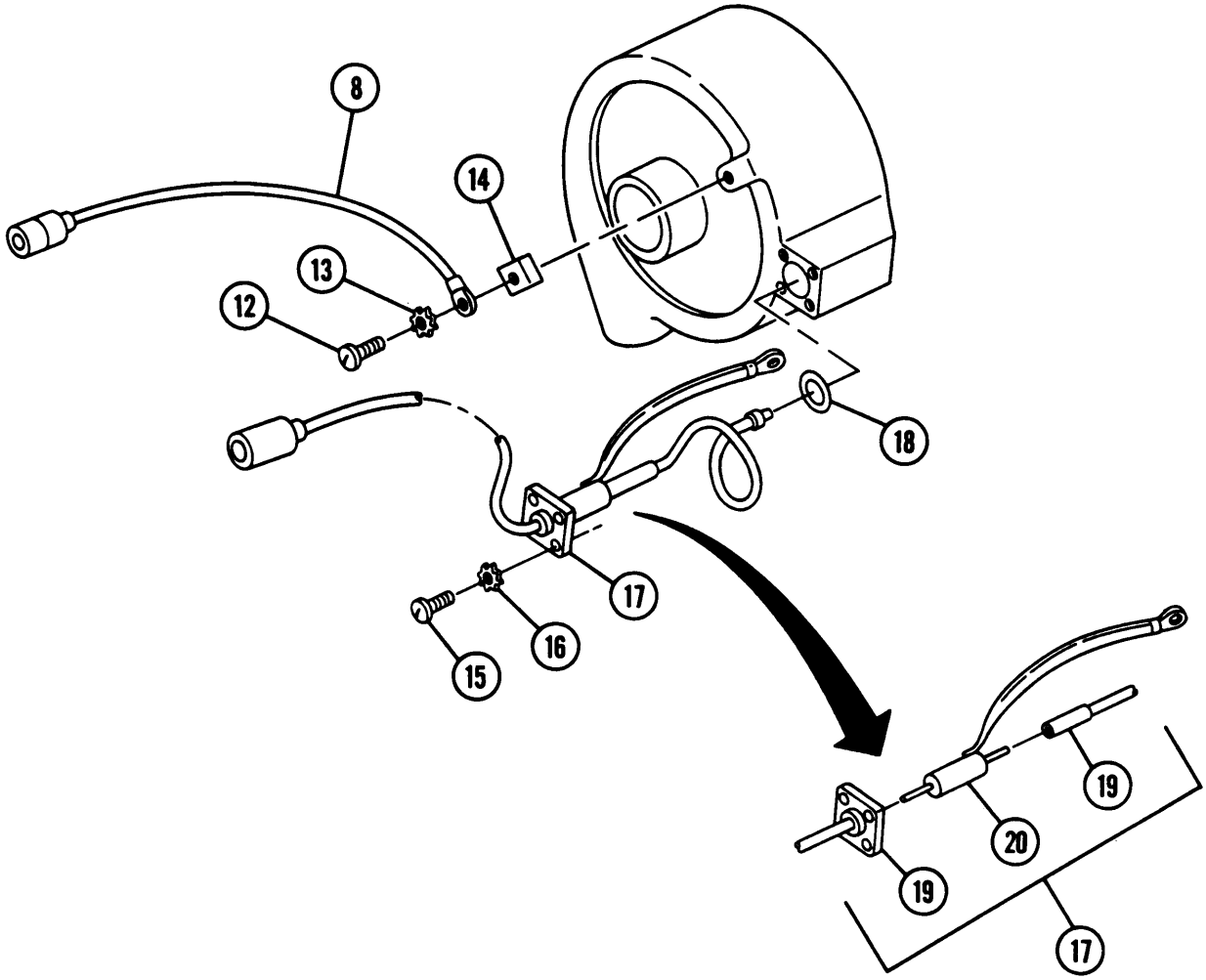

## 5-5 AIR CLEANER BLOWER MOTORS — CONTINUED

**a. Disassembly — Continued**

9 Remove self-locking nut (21). Unscrew impeller (22). Remove washers (23) (quantity will vary) and felt washer (24). Discard self-locking nut.

**NOTE**

Follow step 10 for removal of both brush assembly holders.

10 Remove three screws (25), three lockwasher's (26), electrical lead (6), spring (27), and brushes (28) from brush assembly holder (29). Discard lockwashers.

11 Remove two screws (30) and two lockwasher (31). Discard lockwasher.

12 Separate motor cover (3), stator (32), armature (33), two bearings (34), and flat washer (35).

13 Remove screw (36) and clip (37) from commutator end bell (9).

14 Remove brush assembly holder (29) from commutator end bell (9).

15 Remove ground wire (38).

**b. Inspection, Repair, and Test**

1 Measure brushes (28). If less than 0.39 in. (9.9 cm), replace brushes.

2 Inspect brush assembly holder (29). Replace if brass fittings are cracked or damaged.

3 Inspect felt washer (24). Replace if cracked or distorted.

4 Inspect two bearings (34) (TM 9-214). Replace as required.

5 Test armature (33) on growler. Use lathe to turn down armature. Undercut mica 0.03 in. (0.8 mm) as required.

6 Test stator (32) for continuity. Replace if field winding is open or shorted.

7 Inspect motor cover (3). Replace if damaged or distorted.

8 Inspect washers (23). Replace if cracked or distorted.

9 Inspect impeller (22). Replace if nicked, cracked, or vanes are broken.

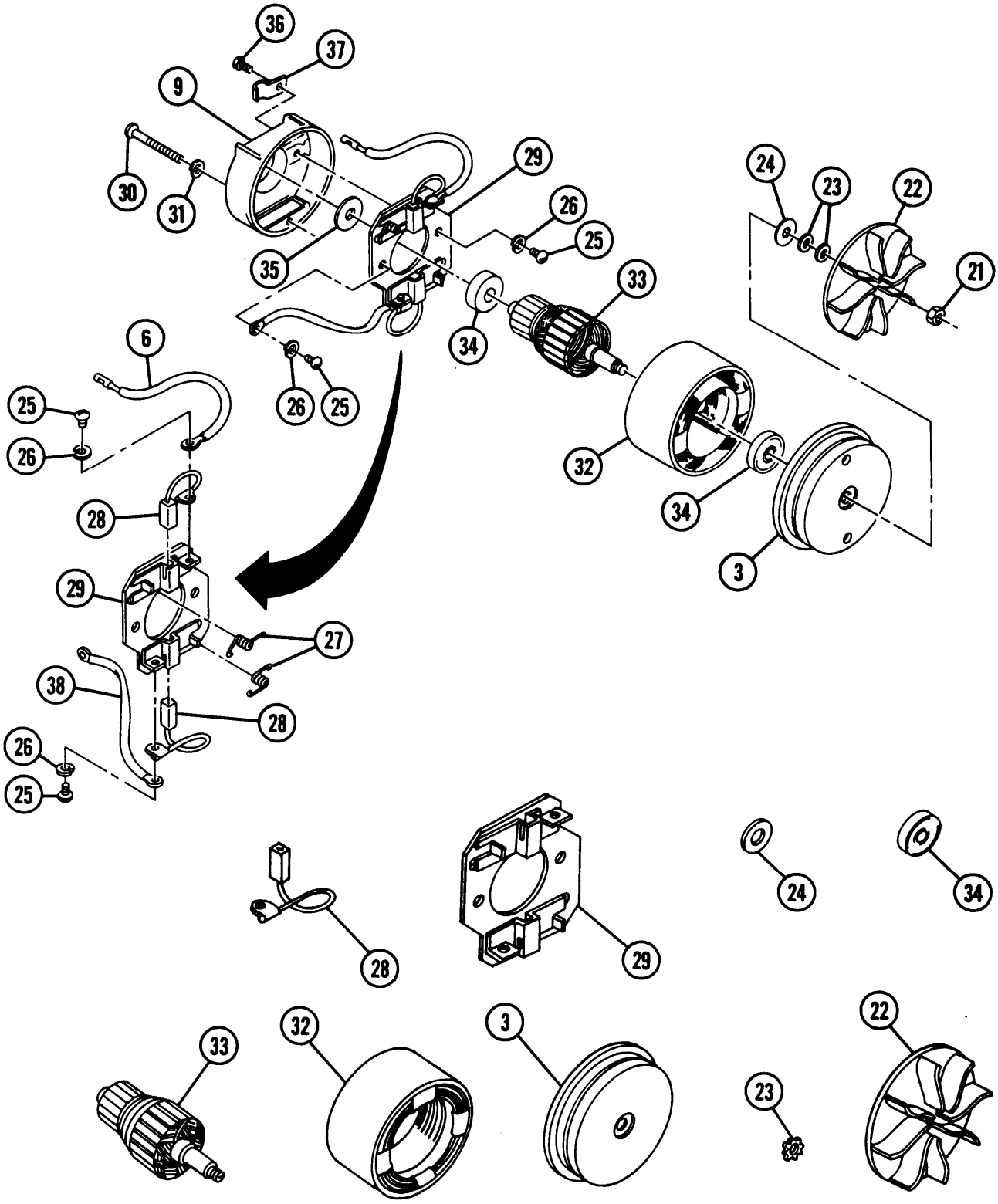
36
37
9
30
31
29
26
25
35
24
23
22
21
33
34
6
26
25
25
26
32
34
3
28
29
27
38
28
26
25
28
29
24
34
33
32
3
23
22

## 5-5 AIR CLEANER BLOWER MOTORS — CONTINUED

**b. Inspection, Repair, and Test — Continued**

10 Test capacitor (20) for continuity. If resistance value is indicated on multimeter, replace capacitor.

11 Inspect impeller housing (39). Replace if cracked or damaged.

12 Inspect commutator end bell (9). Replace if cracked or damaged.

13 Inspect motor cover (3). Repair if cracked, dented, or damaged. Replace if beyond repair.

**c. Assembly**

1 Install ground wire (38) and repeat step 2 for second brush assembly holder (29).

2 install brush assembly holder (29), two new lockwashers (26), and two screws (25) to commutator end bell (9).

3 Install clip (37) and screw (36) to commutator end bell (9).

4 Install flat washer (35), two bearings (34), armature (33), stator (32), and motor cover (3).

5 Install two new lockwasher (31) and two screws (30).

6 Install brush (28), spring (27), electrical lead (6), new lockwasher (26), and screw (25) to brush assembly holder (29).

7 Install felt washer (24) and washers (23).

8 Screw impeller (22) to armature (33) and install new self-locking nut (21).

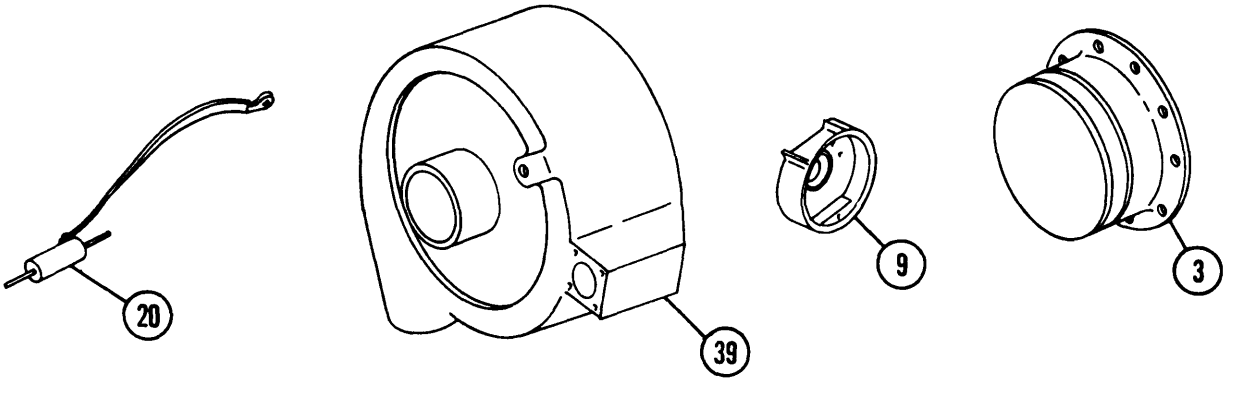

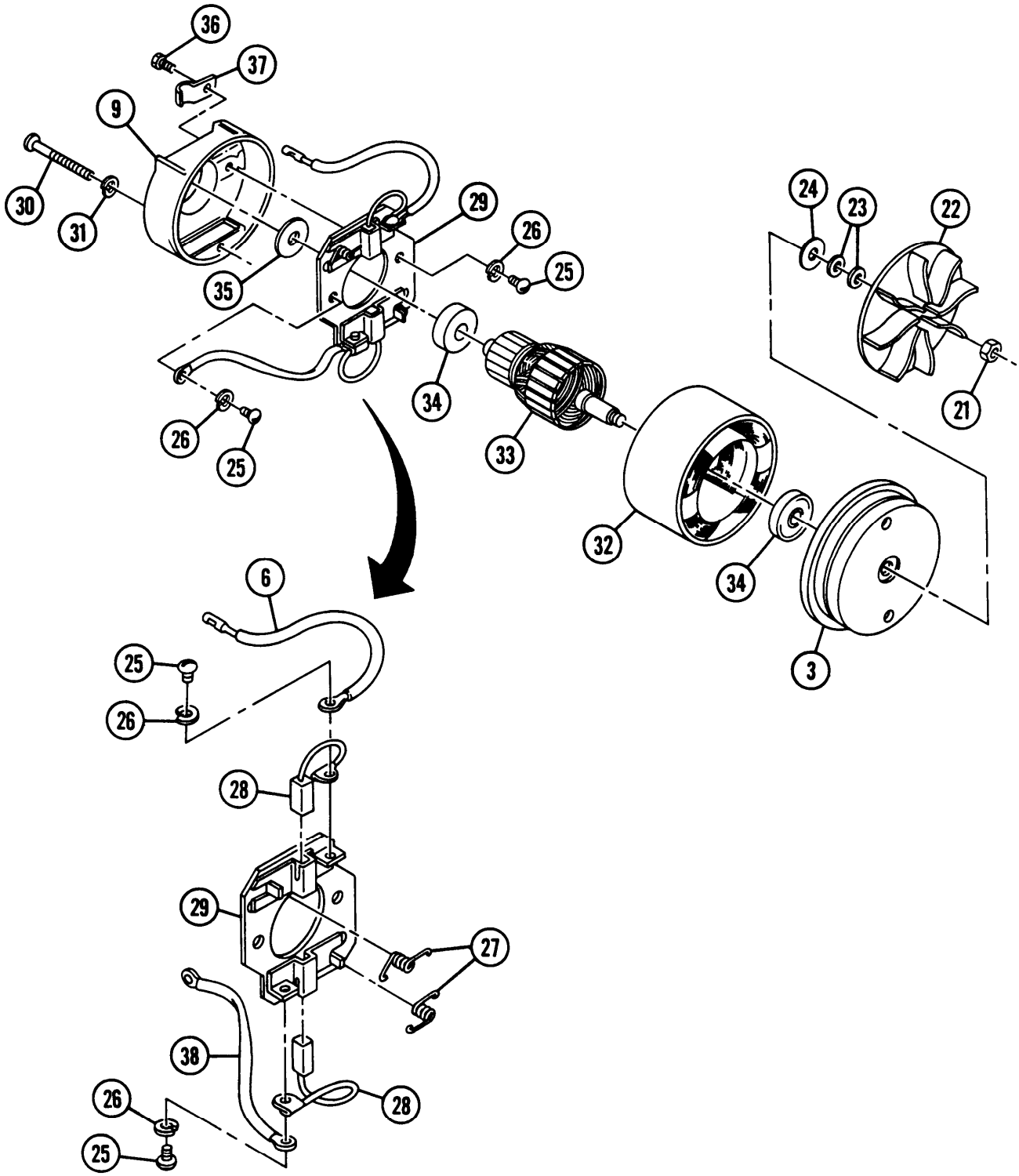
36
37
9
30
31
29
26
25
35
24
23
22
21
34
33
26
25
32
34
3
6
25
26
28
29
27
38
26
25
28

## 5-5 AIR CLEANER BLOWER MOTORS — CONTINUED

**c. Assembly — Continued**

9 Measure from motor cover (3) to end of impeller (22). Add or subtract washers as required to obtain 1.593-to 1.609-in. (4.046- to 4.087-cm) dimension.

10 Solder leads (19) to connect capacitor (20), assembling capacitor lead assembly (17).

11 Install new preformed packing (18), capacitor lead assembly (17), four new lockwasher (16), and four screws **(15).**

12 Install clip (14), ground lead (8), new lockwasher (13), and screw (12) to impeller housing (39).

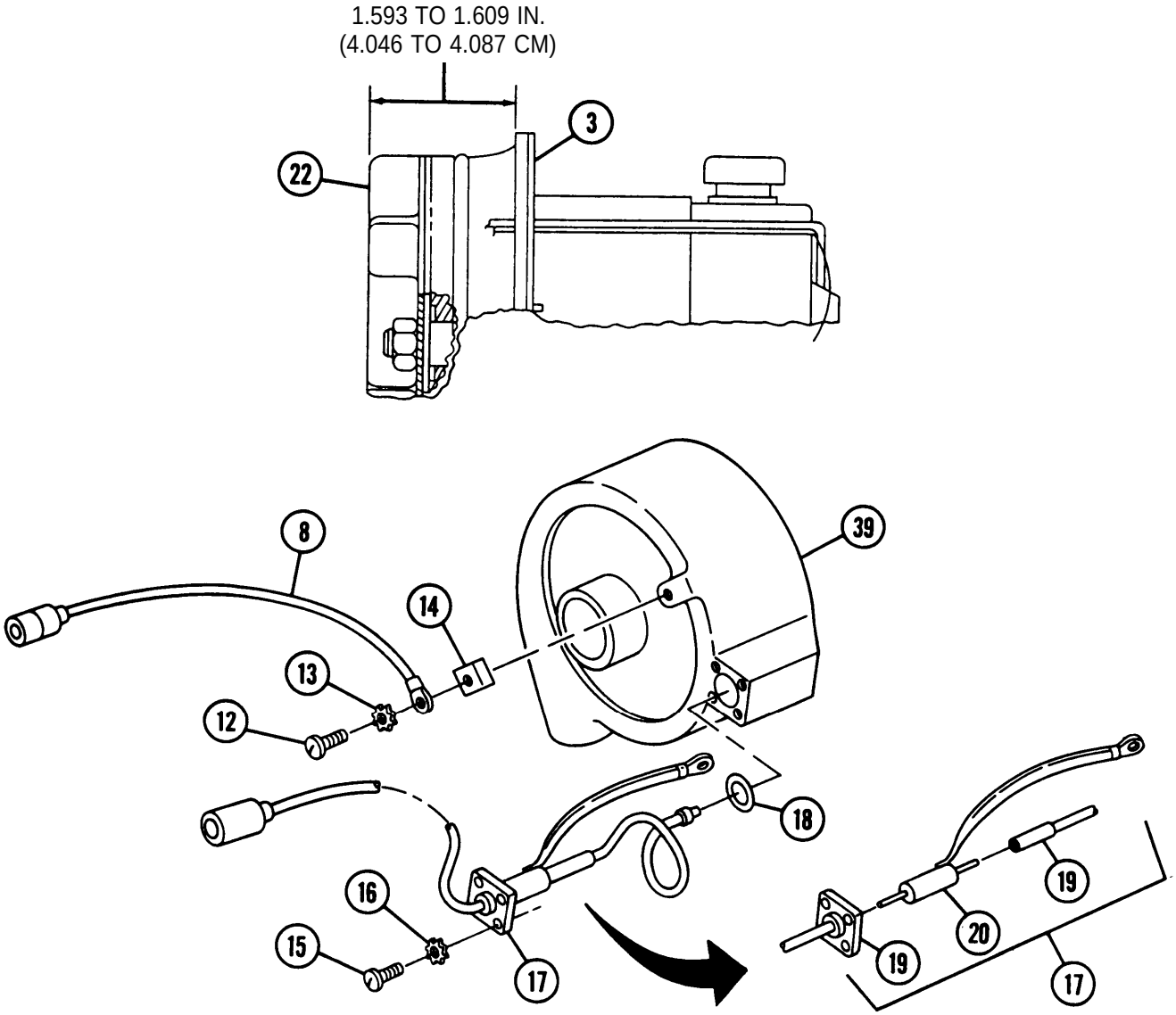

13 Install two new seals (11) and motor assembly (10) to impeller housing (39).

14 Remove screw (7) and connect ground lead (8). Reinstall screw.

15 Connect electrical lead (6) to connector (5).

16 Slide electrical lead insulator (4) toward connector (5).

17 Install motor cover (3), 10 new lockwasher (2), and 10 screws (1).

18 Bench test air cleaner blower motor assembly using 24-V power source. If working correctly, install in vehicle (TM 9-2350-311-20-1) and test. If not working, disassemble and repair.

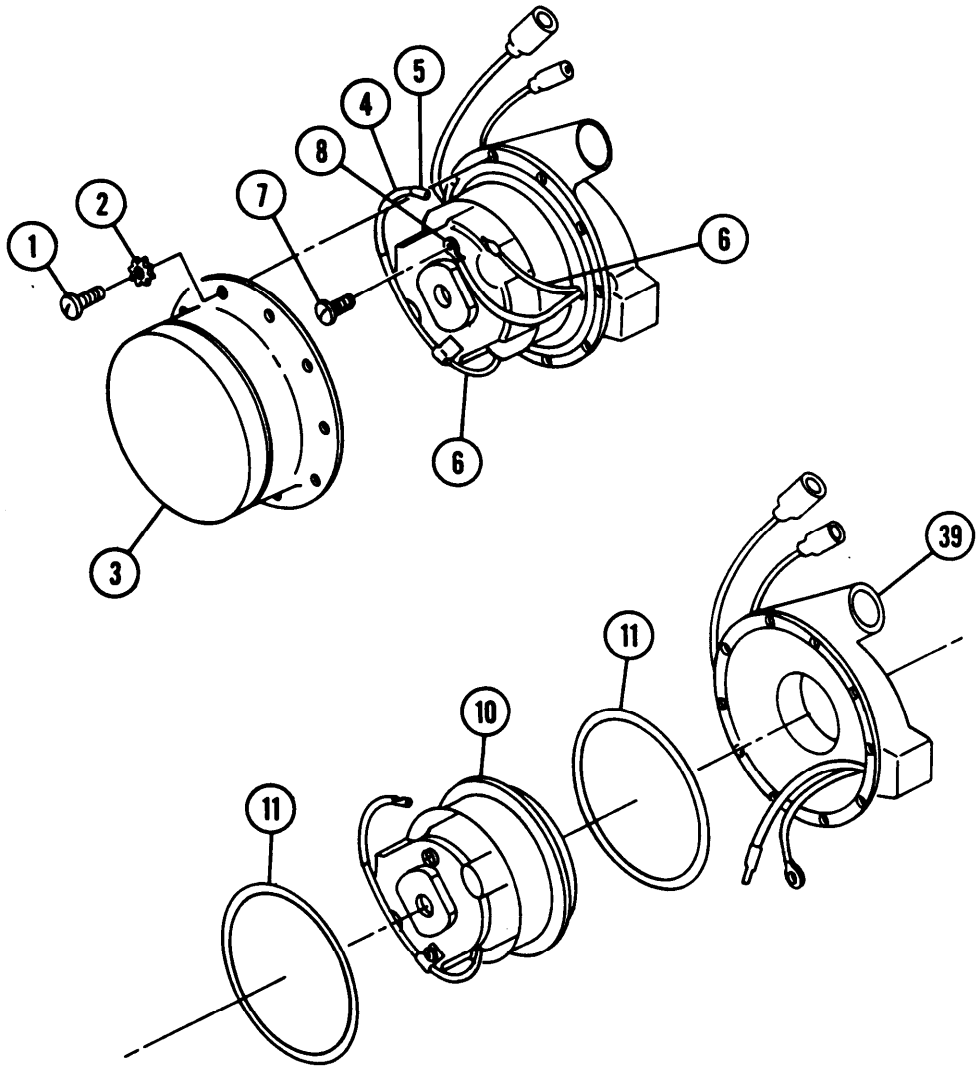

## 5-5 AIR CLEANER BLOWER MOTORS — CONTINUED

**d. Test**

1 Remove motor cover.

2 Disconnect electrical lead.

**NOTE**

Steps 3 and 4 apply to M109A2/M109A3 Howitzers. Step 5 applies to M109A4/ M109A5 Howitzers.

3 Start engine and run at idle (TM 9-2350-311-10).

4 Turn on electrical systems.

5 Put vehicle in gear and turn MASTER switch on.

6 Perform electrical test as shown below.

7 Place red lead of multimeter in lead connector (6) and black lead to ground (8).

8 Read and monitor voltage. If voltage increases or fluctuates, replace capacitor.

9 If inoperable, perform other electrical troubleshooting procedures (TM 9-2350-311-20-1).

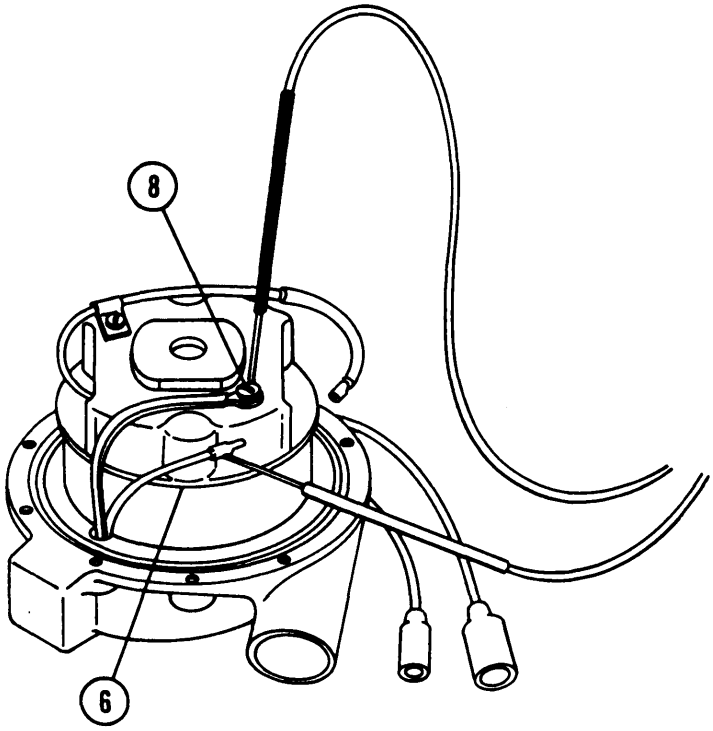

10 Air cleaner blower motors should meet the following performance specifications:

(a) Rated voltage: 24 Vdc.

(b) Blower load current: 7.5 amps maximum at 73°F (23°C) ambient temperature.

(c) Blower load speed: 11,500 rpm 10% at 77° F (25°C) ambient temperature. For +10% voltage, maximum speed change of +10. For -10% voltage, maximum speed change of -10%.

| VOLTAGE* | MAXIMUM AMPS | CFM | INLET VACUUM GAGE READING |
|---|---|---|---|
| 24 | 5.5 | 0 minutes | 14.0-in. (35.6-cm) water minimum |
| 24 | 6.5 | 40 minutes | 8.0-in. (20.3-cm) water minimum |
| 24 | 7.5 | 60 minutes | 0.0-in. (0.0-mm) water minimum |

* Performance data at 72 to 82°F (22 to 28°C) ambient temperature.

**NOTE**

Performance curve at 24 Vdc 25 ± 8°C ambient temperature. Amps line represents maximum values. Speed, efficiency, and watts output curves are minimum values.

PERFORMANCE CHART

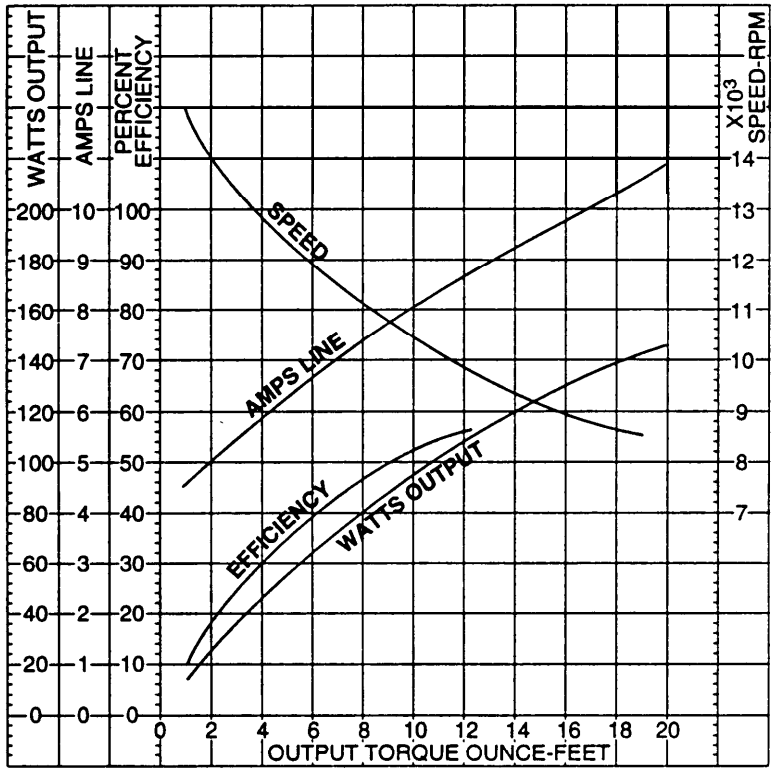


**NOTE**

FOLLOW-ON MAINTENANCE: Refill engine coolant system (TM 9-2350-311-10

## 5-6 FUEL TANK HEAT SHIELD

This task covers: a. Inspection and Repair

**INITIAL SETUP**

**Tools**
General mechanic's tool kit (item 14, Appx C)

**References**
TM 9-2350-311-20-1
TM 9-237

### a. Inspection and Repair

1 Check fuel tank heat shield seals (1) for tearing or deterioration. Replace as required (TM 9-2350-311-20-1).

2 Check supports for cracks or damage. Weld to repair or replace as required (TM 9-237).

3 Check retainers for cracks, damage, or bent areas. Weld to repair, straighten, or replace as required (TM 9-2350-311-20-1).

4 Check for stripped threads on retainer studs. Drill out and replace welded studs or retainer as required (TM 9-2350-311-20-1).

5 Check insulation. Replace if deteriorated or burnt (TM 9-2350-311-20-1).

6 Check heat shield body for cracks or broken welds. Weld to repair or replace as required (TM 9-2350-311-20-1).

7 Check pad (2) for deterioration. Fabricate new pad if required (item 3, Appx D).

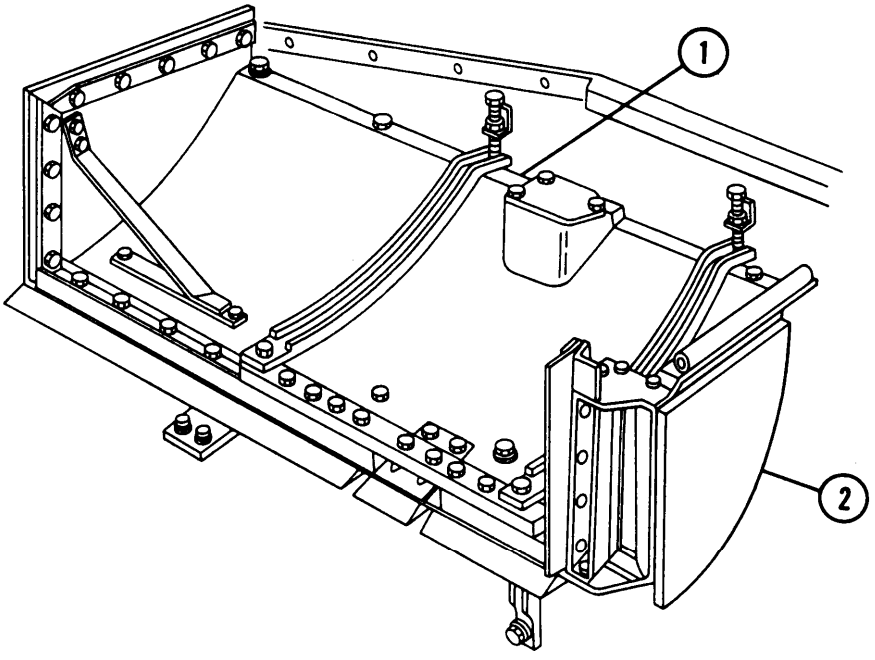

# CHAPTER 6
# COOLING SYSTEM

## GENERAL

This chapter describes and illustrates procedures for removal, disassembly, inspection and test, repair, assembly, and installation of the cooling system components.

Procedures for removal, inspection, repair, and installation of the coolant manifolds are contained in TM 9-281 5-202-34; procedures for repair of the cooling system are contained in TM 750-254; procedures for inspection and repair of the coolant pump are contained in TM 9-2815-202-34.

CONTENTS


| | | PAGE |
|---|---|---|
| Section I | UNIVERSAL JOINTS AND COOLING FAN DRIVE ASSEMBLY | 6-2 |
| 6-1 | UNIVERSAL JOINTS | 6-2 |
| 6-2 | COOLING FAN DRIVE ASSEMBLY | 6-4 |
| Section II | RADIATOR SHROUD AND VANEAXIAL COOLING FAN ASSEMBLY | 6-11 |
| 6-3 | VANEAXIAL COOLING FAN ASSEMBLY AND SHROUD | 6-11 |
| 6-4 | VANEAXIAL COOLING FANS AND FAN DRIVE GEARBOX | 6-13 |

## SECTION I. UNIVERSAL JOINTS AND COOLING FAN DRIVE ASSEMBLY

## 6-1 UNIVERSAL JOINTS

This task covers: a. Removal b. Inspection c. Installation

**INITIAL SETUP**

**Tools**
General mechanic's tool kit (item 14, Appx C)
Vernier calipers (item 2, Appx C)

**a. Removal**

1 Push two sleeve joints (1 and 2) downward and remove from splined shafts (3 and 4) on fan gearboxes (5 and 6).

2 Pull two universal joints (7 and 8) away from cooling fan drive (9) and up through opening in shroud (10).

b. Inspection

**NOTE**

If any item is found defective during inspection, entire universal joint must be replaced.

1 Check end hubs (11) for chipped, broken, or missing splines (12).

2 Measure shaft length of universal joint (8) under static no-load condition. Length should not exceed 14.5 in. (36.8 cm).

3 Apply 20 lb (9.1 kg) and 2 lb (0.9 kg) compression to universal joint (8).

4 Measure shaft length of universal joint (8) under compression. Length should be no less than 13.2 in. (33.5 cm).

5 Check end hubs (11) for chipped, broken, or missing splines (12).

6 Measure shaft length of universal joint (7) under static no-load condition. Length should not exceed 12 in. (30.5 cm).

7 Apply 20 lb (9.1 kg) and 2 lb (0.9 kg) compression on universal joint (7).

8 Measure shaft length of universal joint (7) under compression. Length should be no less than 10.7 in. (27.2 cm).

**c. Installation**

1 Push two universal joints (7 and 8) down through openings in shroud (10) close to cooling fan drive (9).

2 Slide two sleeve joints (1 and 2) upward and install on splined shafts (3 and 4) of fan gearboxes (5 and 6).

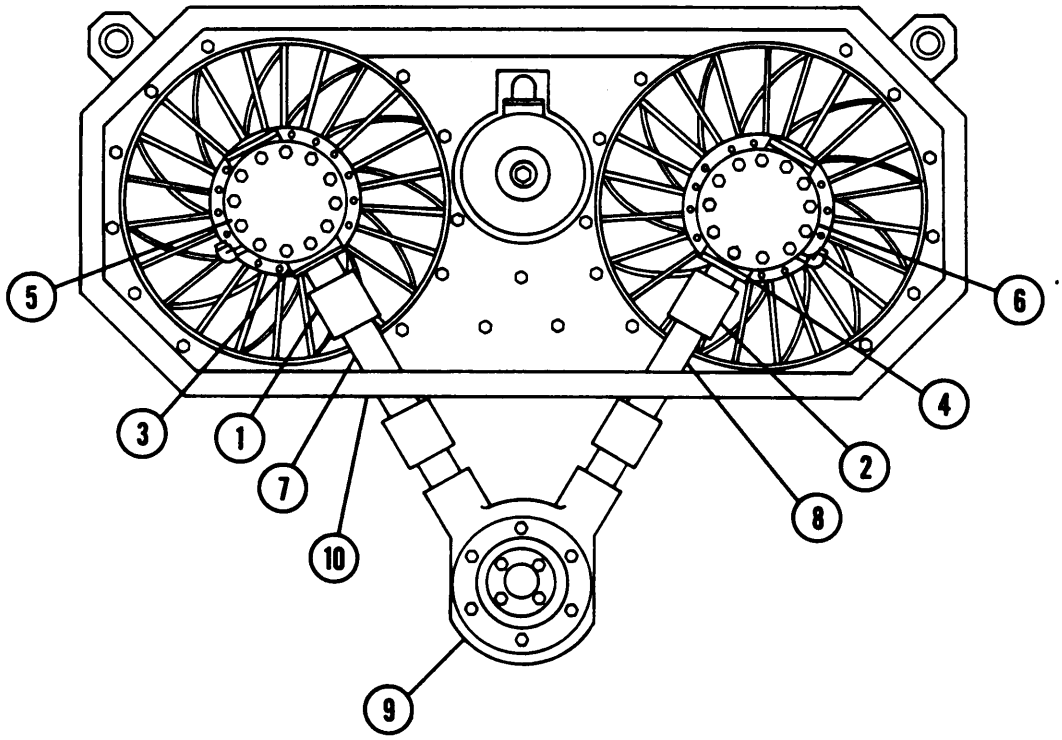


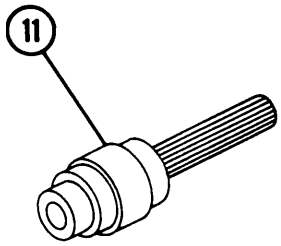


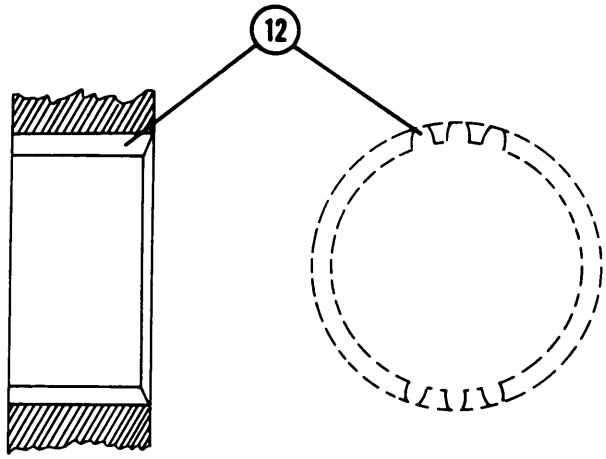

## 6-2 COOLING FAN DRIVE ASSEMBLY

This task covers: a. Removal b. Disassembly c. Assembly d. Installation

**INITIAL SETUP**

**Tools**
General mechanic's tool kit (item 14, Appx C)
Dial indicator (item 4, Appx C)
Fabricated bracket (item 1, Appx D)
Micrometer (item 15, Appx C)
Support blocks (item 3, Appx C)
Toque wrench (item 28, Appx C)

**Materials/Parts**
Gaskets (2) (item 60, Appx F)
Gasket (item 62, Appx F)
Gasket (item 64, Appx F)
Key washer (item 6, Appx F)
Lockwashers (3) (item 30, Appx F)
Lockwashers (12) (item 37, Appx F)
Lockwire (item 9, Appx F)
Lubricant (item 10, Appx B)
Preformed packings (2) (item 14, Appx F)
Preformed packing (item 19, Appx F)
Preformed packing (item 20, Appx F)
Preformed packing (item 47, Appx F)
Preformed packings (2) (item 48, Appx F)
Retaining ring (item 5, Appx F)
Seal (item 65, Appx F)

**Equipment Conditions**
Cooling fan universal joints removed (para 6-1)

a. **Removal**

1 Remove 12 screws (1) and 12 lockwasher (2). Discard lockwasher.

2 Remove cooling fan drive assembly (3) and gasket (4). Discard gasket.

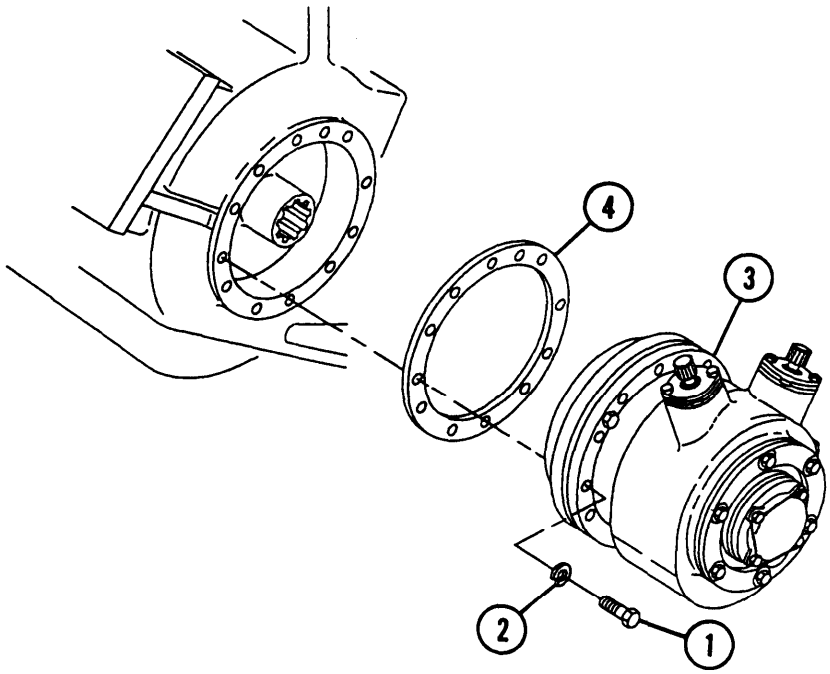

**b. Disassembly**

**NOTE**

Some cooling fan drive assemblies may not include preformed packings.

1 Remove two screws (5), gasket (6), input cover (7), and three preformed packings (8 and 9). Discard gasket and preformed packings.

2 Remove four screws (10), two bevel gearcase assemblies (11), two shims (12), and two preformed packings (13). Discard preformed packings.

3 Remove retainer (14), preformed packing (15), and seal (16). Discard preformed packing and seal.

4 Straighten key washer (17) tabs.

5 Remove nut (18) and key washer (17). Discard key washer.

6 Remove outer bearing (19), spacer (20), inner bearing (21), and sleeve (22) from bevel gearshaft (23).

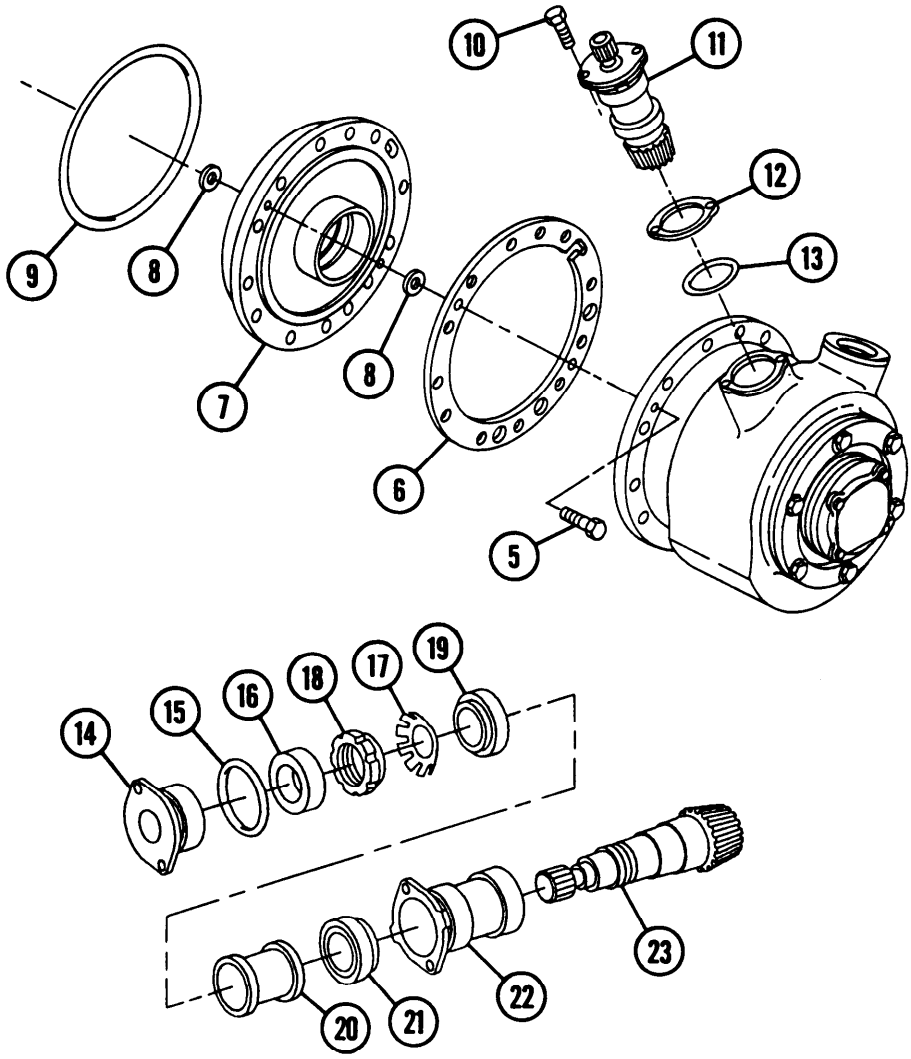

## 6-2 COOLING FAN DRIVE ASSEMBLY — CONTINUED

**b. Disassembly — Continued**

7 Remove Ioclwvire (24), four screws (25), bearing cover (26), and gasket (27). Discard Iockwire and gasket.

8 Remove six screws (28), bearing housing (29), preformed packing (30), and shim pack (31). Measure thickness of shim pack and record. Discard preformed packing.

9 Remove Iockring (32) and inner bearing (33). Discard Iockring.

10 Remove driveshaft assembly (34) and outer bearing (35).

11 Remove Iockwire (36), six screws (37), and drivegear (38) from driveshaft (39). Discard Iockwire.

**NOTE**

Some cooling fan drive assemblies may not include screws (40), Iockwasher (41), valve cover (42), and gasket (43).

12 Remove three screws (40), three Iockwasher (41), valve cover (42), and gasket (43). Discard Iockwasher and gasket.

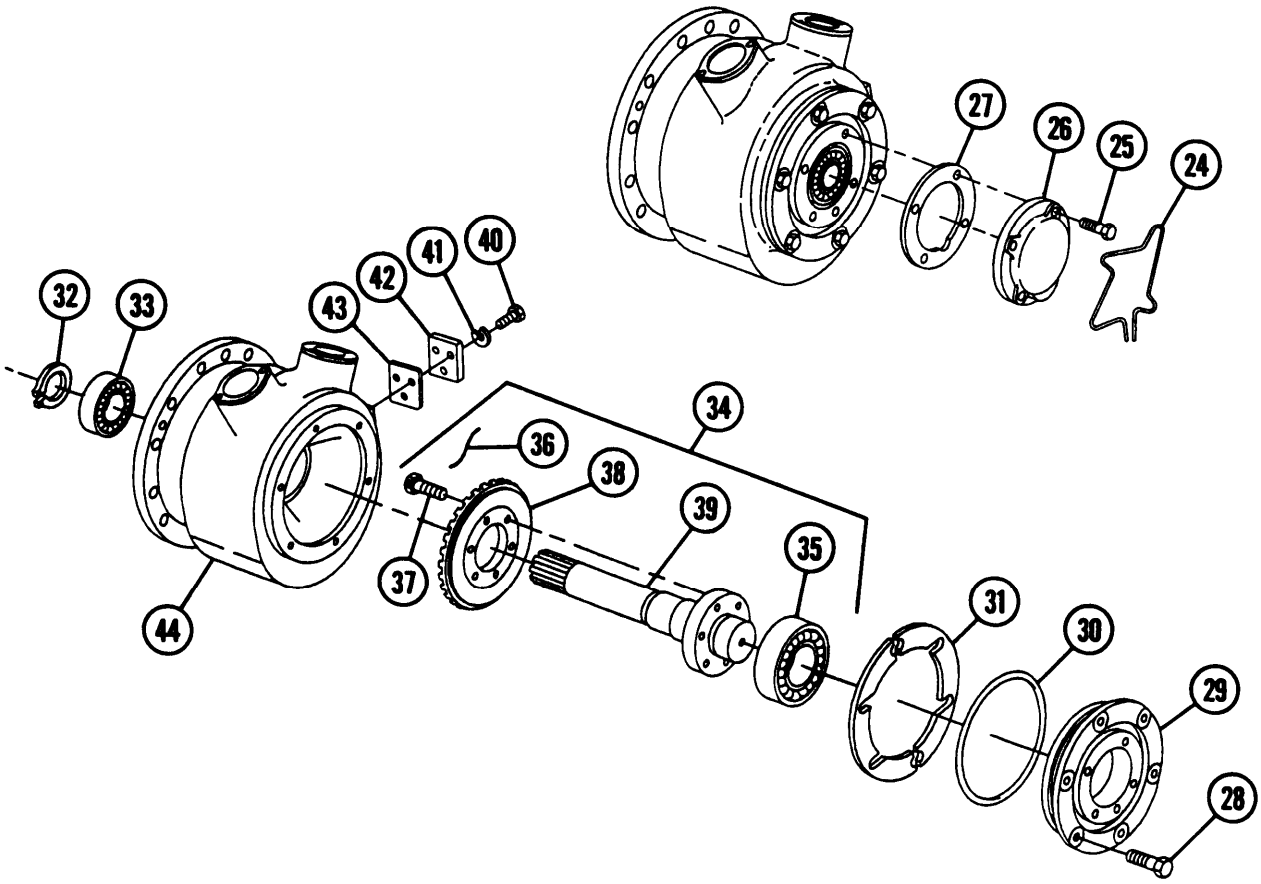

**c. Assembly**

**NOTE**

Drivegear and bevel gearshaft must be replaced as matched set.

1 Install drivegear (38), six screws (37), new lockwidre (36), and outer bearing (35) to driveshaft (39). Toque six screws to 32 lb-ft (43 N•m).

2 Install driveshaft assembly (34) to housing (44).

3 Install shim pack (31) using thickness recorded in disassembly and install new preformed packing (30), bearing housing (29), and six screws (28) to housing (44).

4 Install inner bearing (33) and new lockring (32) to driveshaft (39).

**NOTE**

Some cooling fan drive assemblies do not include screws (40), lookwashers (41), valve cover (42), and gasket (43).

5 Install new gasket (43), valve cover (42), three new lockwasher (41), and three screws (40) to housing (44).

6 Install new gasket (27), bearing cover (26), four screws (25), and new lockwire (24). Toque four screws to 19-21 lb-ft (26-28 N•m).

7 Establish dimension Bon driveshaft (39) as follows:

(a) Measure distance between retainer boss (45) and top of driveshaft (39) at point between input cover (7) and drivegear (38).

(b) Add 0.671 in. (17.04 mm) to measured distance.

(c) Record total as dimension B.

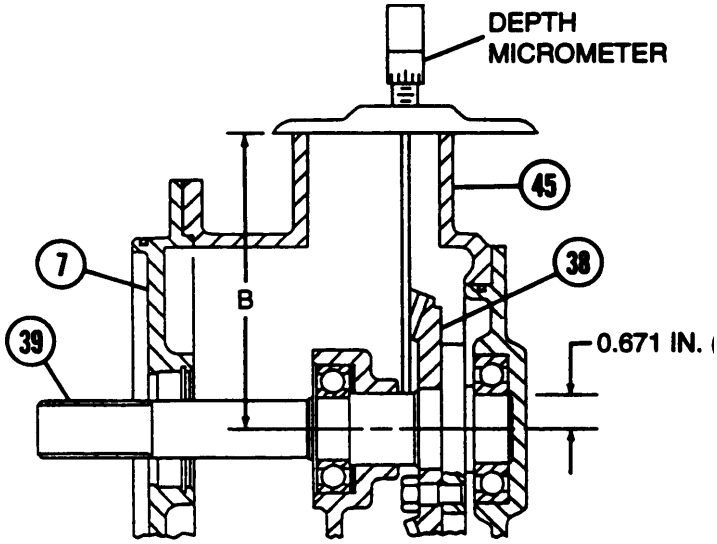


MEASURING "B" DIMENSION

## 6-2 COOLING FAN DRIVE ASSEMBLY — CONTINUED

**c. Assembly — Continued**

8 Install sleeve (22), inner bearing (21), spacer (20), and outer bearing (19) to bevel gearshaft (23).

9 Apply lubricant to new seal (16).

10 Install new key washer (17), nut (18), seal (16), new preformed packing (15), and retainer (14). Bend key washer tabs to clear retainer wall.

11 Establish dimension A on bevel gearcase assembly by measuring distance from toe end of bevel gearshaft (23) to flange (47) on retainer (14). Record this measurement as dimension A.

12 Establish dimension Con cooling fan drive assembly by subtracting dimension A from dimension B.

13 Read dimension Z off face of bevel gear shaft (23). Subtract dimension C from dimension Z and record this difference as shim thickness required.

14 Install two new preformed packings (13), two shims (12), two bevel gearcase assemblies (11), and four screws (10) to housing (44). Torque screws to 19-21 Ib-ft (2-28 N•m).

15 Check cooling fan drive assembly (3) backlash between bevel gearshaft (23) and driveshaft (39) (backlash should be 0.004 to 0.008 in. [0.10 and 0.20 mm] ) as follows:

(a) Install fabricated bracket using two appropriate screws (48) and two nuts (49). Bracket should aline with bevel gearcase assembly (11).

(b) Set and secure cooling fan drive assembly (3) on support blocks on flat surface.

(c) Install dial indicator on bracket and position on gear teeth (50) as shown.

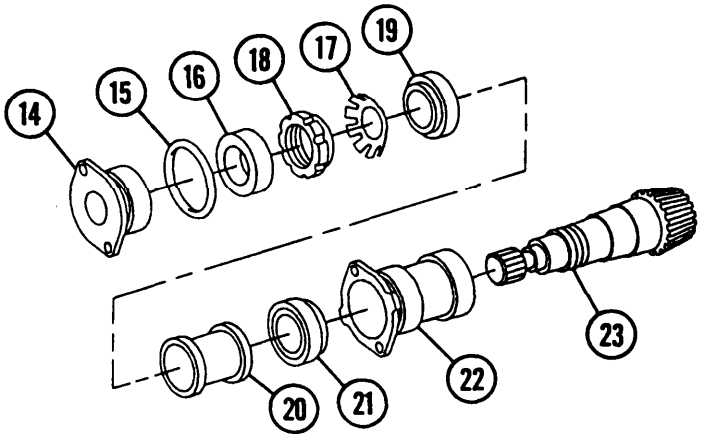


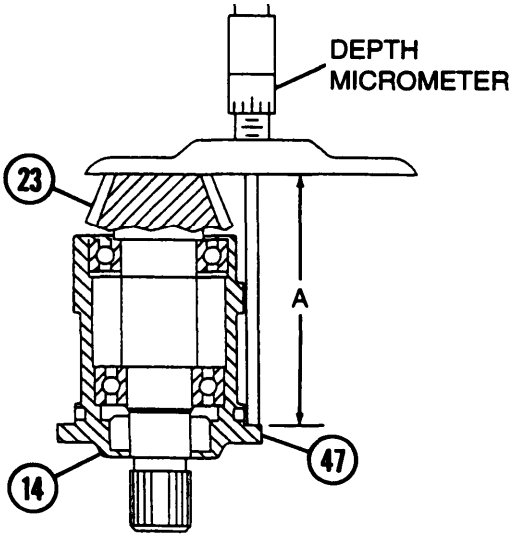


MEASURING "A" DIMENSION

(c) Install dial indicator on bracket and position on gear teeth (50) as shown.

(d) Hold driveshaft (39) to prevent movement and rotate bevel gearshaft (23) counterclockwise as far as possible without forcing.

(e) Zero dial indicator and slowly rotate gearshaft (23) clockwise reading backlash measurement.

16 Add or remove shims (para 6-4) as required to obtain 0.004- to 0.008-in. (0.10- to 0.20-mm) backlash.

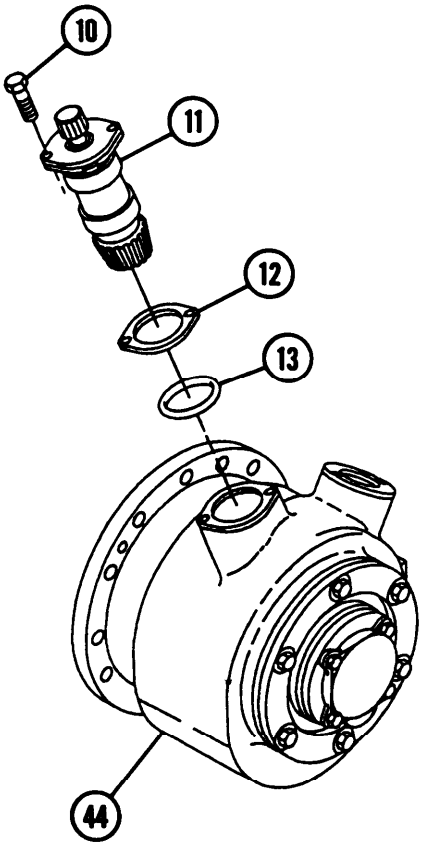


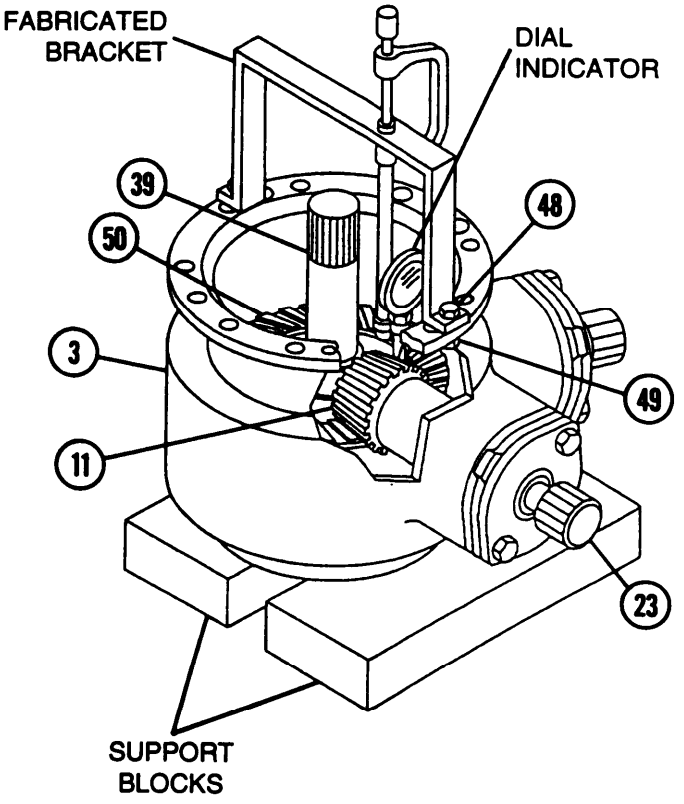

## 6-2 COOLING FAN DRIVE ASSEMBLY — CONTINUED

**c. Assembly - Continued**

**NOTE**

Repeat same procedure for bevel gearcase assembly. Some cooling fan assemblies may not include packings.

17 Install two new preformed packings (8), new gasket (6), input cover (7), new preformed packing (9), and two screws (5) to cooling fan drive assembly (3). Apply lubricant to packing (9).

**d. Installation**

1 Install new gasket (4), cooling fan drive assembly (3).

2 Instal l12 new lockwasher (2) and 12 screws (1).

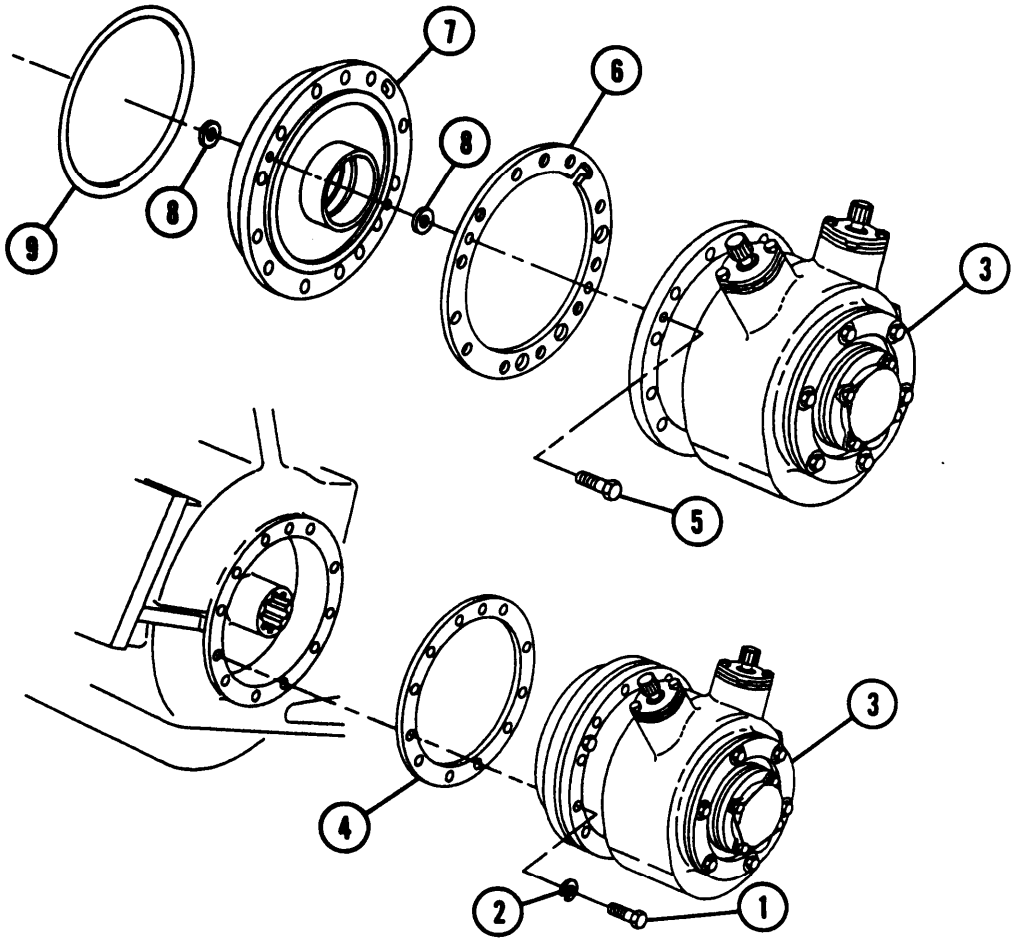


**NOTE**

FOLLOW-ON MAINTENANCE: Install cooling fan universal joints (para 6-1)

## SECTION II. RADIATOR SHROUD AND VANEAXIAL COOLING FAN ASSEMBLY

## 6-3 VANEAXIAL COOLING FAN ASSEMBLY AND SHROUD

This task covers:

a. Separation of Vaneaxial Cooling Fan Assembly from Shroud

b. Separation of Vaneaxial Cooling Fans from Mount

c. Assembly of Vaneaxial Cooling Fans to Mount

d. Assembly of Vaneaxial Cooling Fan Assembly to Shroud

**INITIAL SETUP**

**Tools**
General mechanic's tool kit (item 14, Appx C)

**Materials/Parts**
Lockwashers (28) (item 35, APPX F)
Lockwashers (8) (item 37, Appx F)
Sealing compound (item 20, APPX B)

**Personnel Required**
Two

**Equipment Conditions**
Radiator and shroud removed with fans attached (TM 9-2350-311-20-1)

### a. Separation of Vaneaxial Cooling Fan Assembly from Shroud

**CAUTION**

Support fan assembly and shroud while screws are being removed. Do not damage, destroy, or discard generator mounting preformed packing in shroud.

1 Remove 28 screws (1), 28 lockwasher (2), and 28 washers (3). Discard lockwasher.

2 Separate cooling fans (4) and mount (5) from shroud (6).

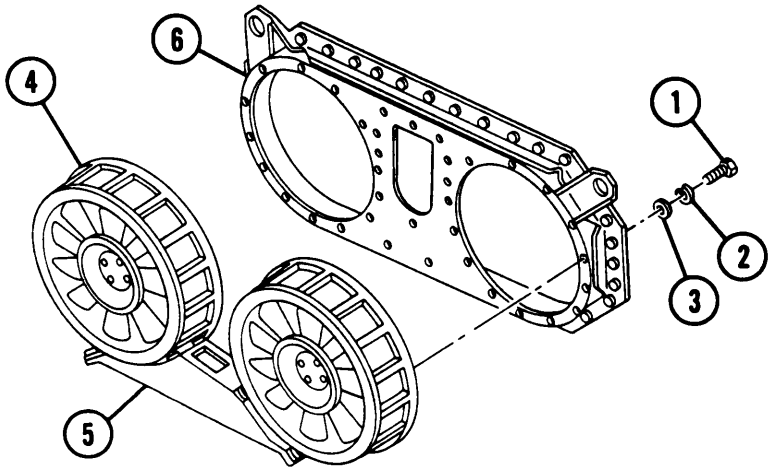

## 6-3 VANEAXIAL COOLING FAN ASSEMBLY AND SHROUD — CONTINUED

**b. Separation of Vaneaxial Cooling Fans from Mount**

Remove eight screws (7), eight lockwasher (8), eight washers (9), and two cooling fans (4) from mount (5). Discard lockwasher.

**c. Assembly of Vaneaxial Cooling Fans to Mount**

**NOTE**

Perform required maintenance on fan drive gearbox before assembling (para 6-4).

Install two cooling fans (4), eight washers (9), eight new lockwasher (8), and eight screws (7).

**d. Assembly of Vaneaxial Cooling Fan Assembly to Shroud**

1 Place cooling fans (4) and mount (5) in shroud (6).

2 Install 28 washers (3) and 28 new lockwasher (2). Apply sealing compound to 28 screws (1) and install screws.

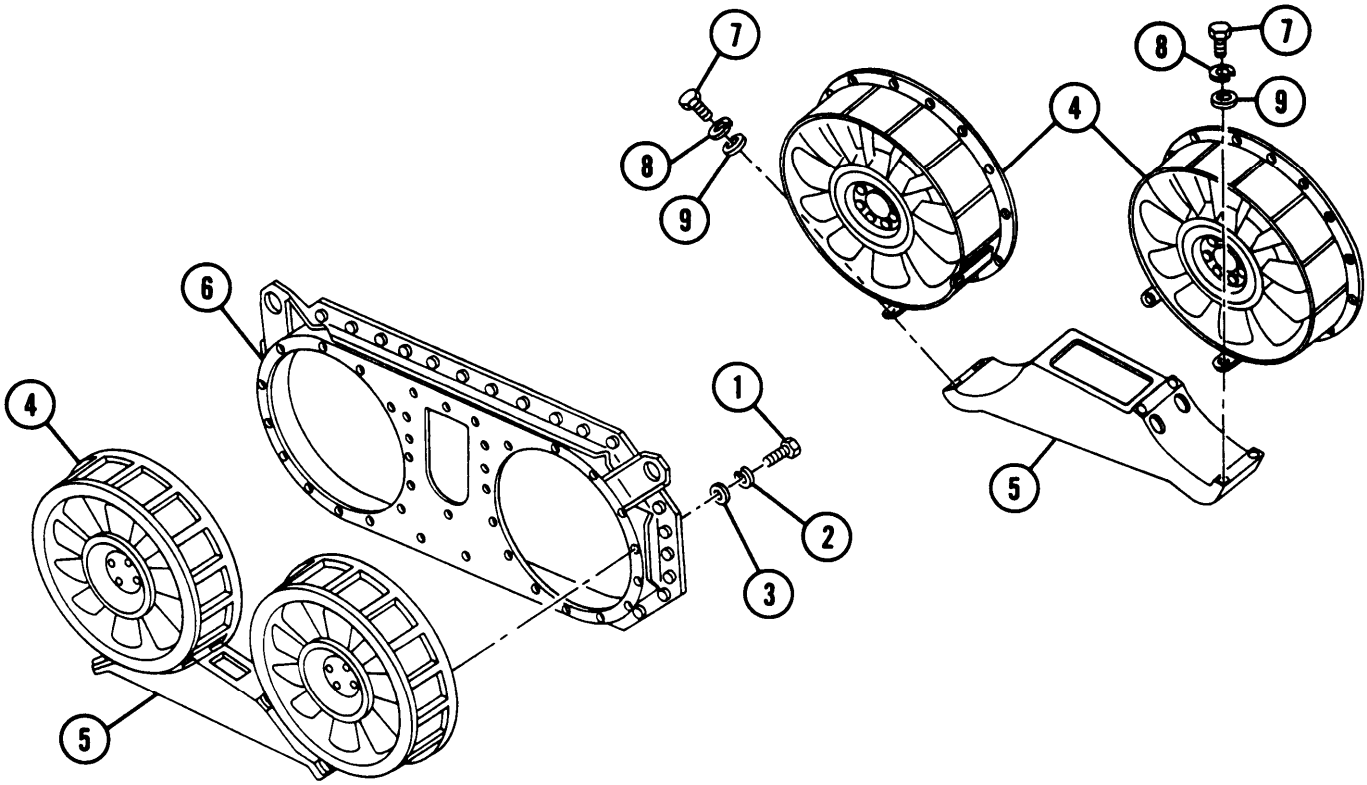


**NOTE**

FOLLOW-ON MAINTENANCE: Install radiator and shroud with fans attached (TM 9-2350-311-20-1)

## 6-4 VANEAXIAL COOLING FANS AND FAN DRIVE GEARBOX

This task covers: a. Disassembly b. Inspection and Test c. Assembly

**INITIAL SETUP**

**Tools**
General mechanic's tool kit (item 14, APPX C)
Dial indicator (item 4, Appx C)
Fabricated measuring bar (item 5, APPX D)
Socket (item 19, Appx C)
Toque wrench (item 28, Appx C)

**Materials/Parts**
Key washer (item 7, Appx F)
Seal (item 66, Appx F)
Seal (item 67, Appx F)

**References**
TM 9-2350-311 -20-1

**Equipment Conditions**
Cooling fans removed from shroud (para 6-3)

### a. Disassembly

**CAUTION**

Use extreme care when removing impeller to avoid any damage. If impeller is damaged, entire vaneaxial fan assembly must be replaced.

1 Remove nut (1) using socket and remove key washer (2) and impeller (3). Discard key washer.

2 Remove 10 socket head screws (4), 10 washers (5), and gearbox assembly (6).

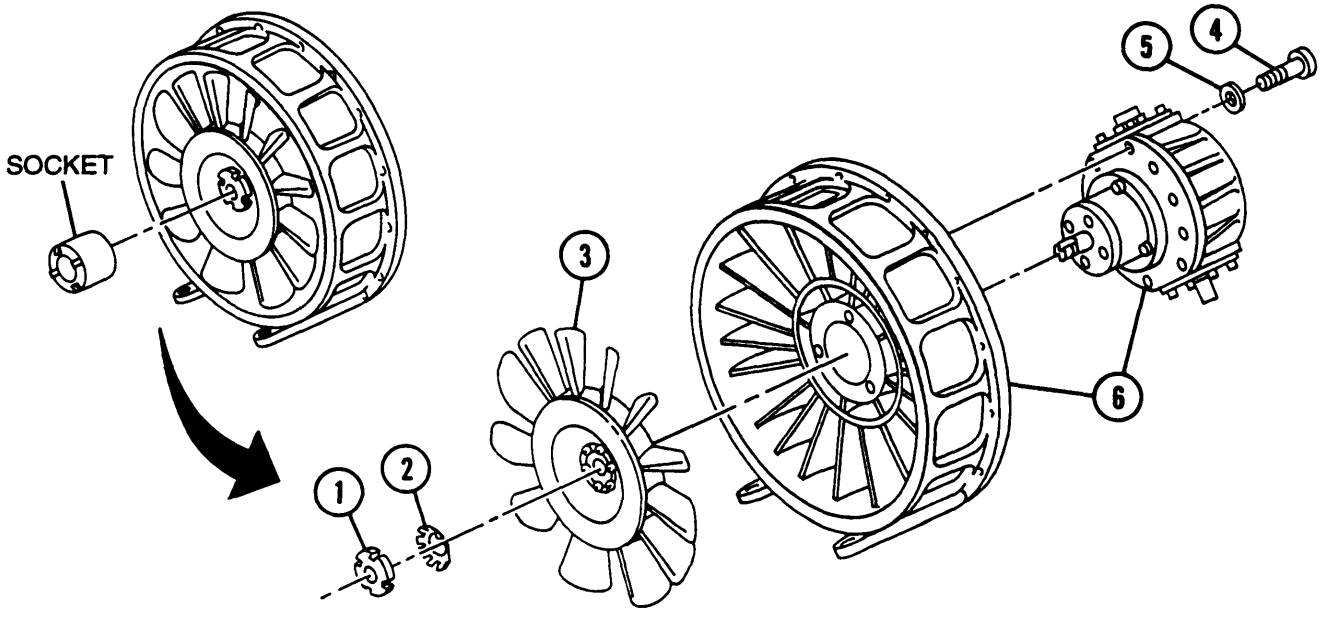

## 6-4 VANEAXIAL COOLING FANS AND FAN DRIVE GEARBOX — CONTINUED

**a. Disassembly — Continued**

**WARNING**

Oil is hazardous waste and must be disposed of in accordance with local procedures or direction of the local Hazardous Waste Management office.

3 Remove plug (7) and drain gearbox (8) oil.

4 Remove breather cap (9).

5 Remove four screws (10), retainer (11), and seal (12). Discard seal.

6 Remove four screws (13), retainer (14), and seal (15). Discard seal.

7 Remove two decals (16) if illegible.

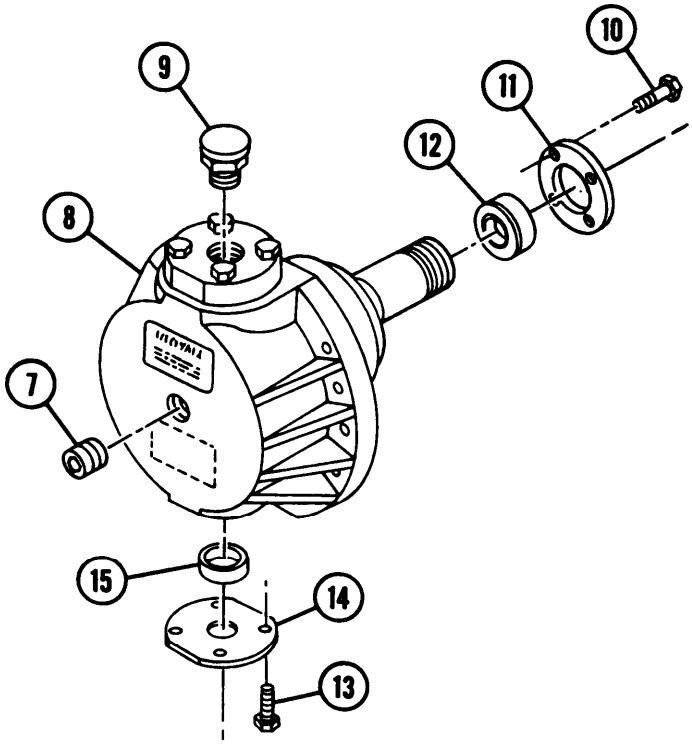


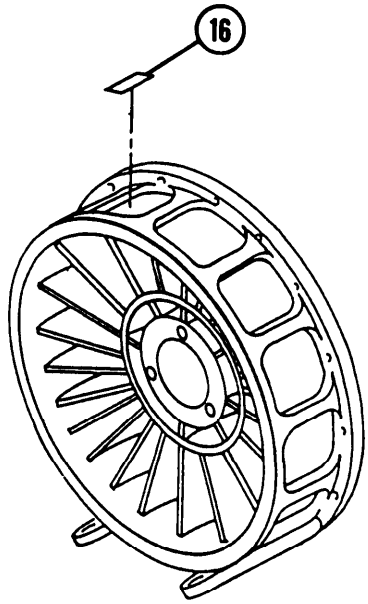

**b. Inspection and Test**

1 Check gearbox housing (17). Replace if cracked or distorted.

2 Check impeller (3). Replace if nicked, broken, or cracked.

**NOTE**

Use steps 3 thru 5 to measure gearbox backlash.

3 Secure gearbox (8) to prevent input shaft (18) from rotating.

4 Install fabricated measuring bar on output shaft (19) using washers or spacers (20) as required and install nut (1). Tighten nut using socket.

5 Push down on measuring bar as far as possible and position dial indicator as shown. Pull up on measuring bar and check dial indicator reading. Reading should be 0.032 to 0.068 in. (0.81 to 1.73 mm) (0.004 to 0.008 in. [0.10 to 0.20 mm] backlash).

6 Discard gearbox (8) if backlash is out of tolerance.

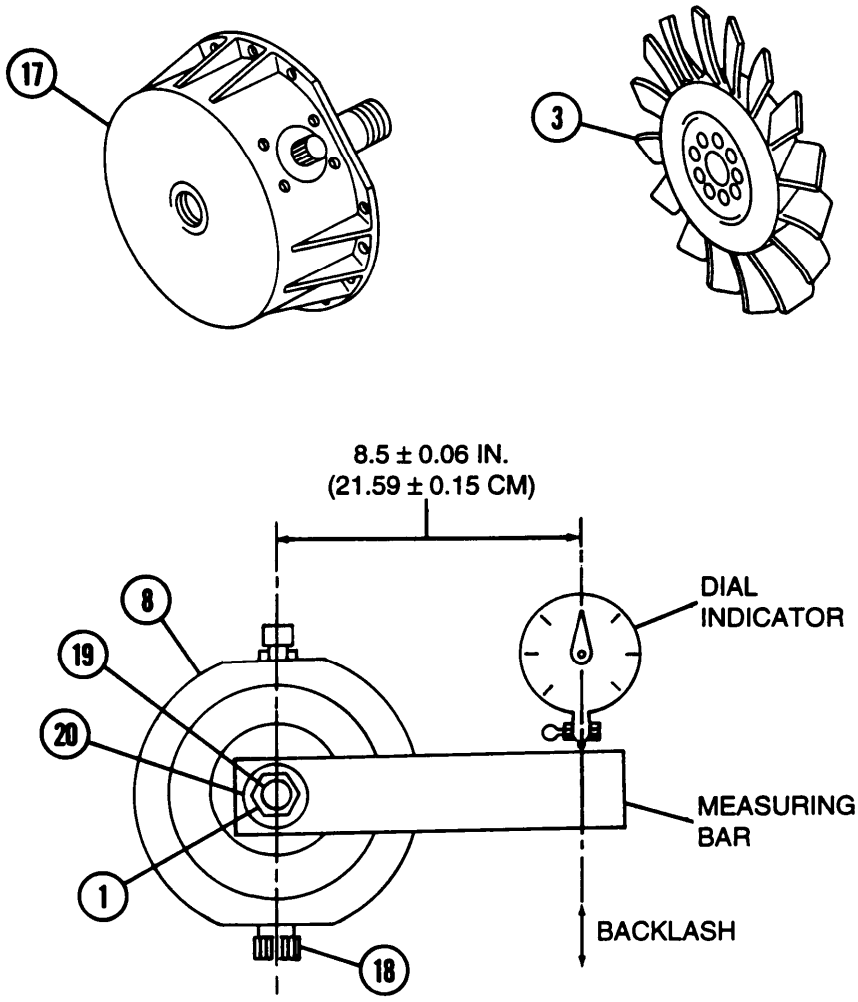

## 6-4 VANEAXIAL COOLING FANS AND FAN DRIVE GEARBOX — CONTINUED

### C. Assembly

1 Install new seal (12), retainer (11), and four screws (10).

2 Install new seal (15), retainer (14), and four screws (13) to gearbox (8). Toque screws to 12-15lb-ft(16-20 N•m).

3 Install breather cap (9) and plug (7).

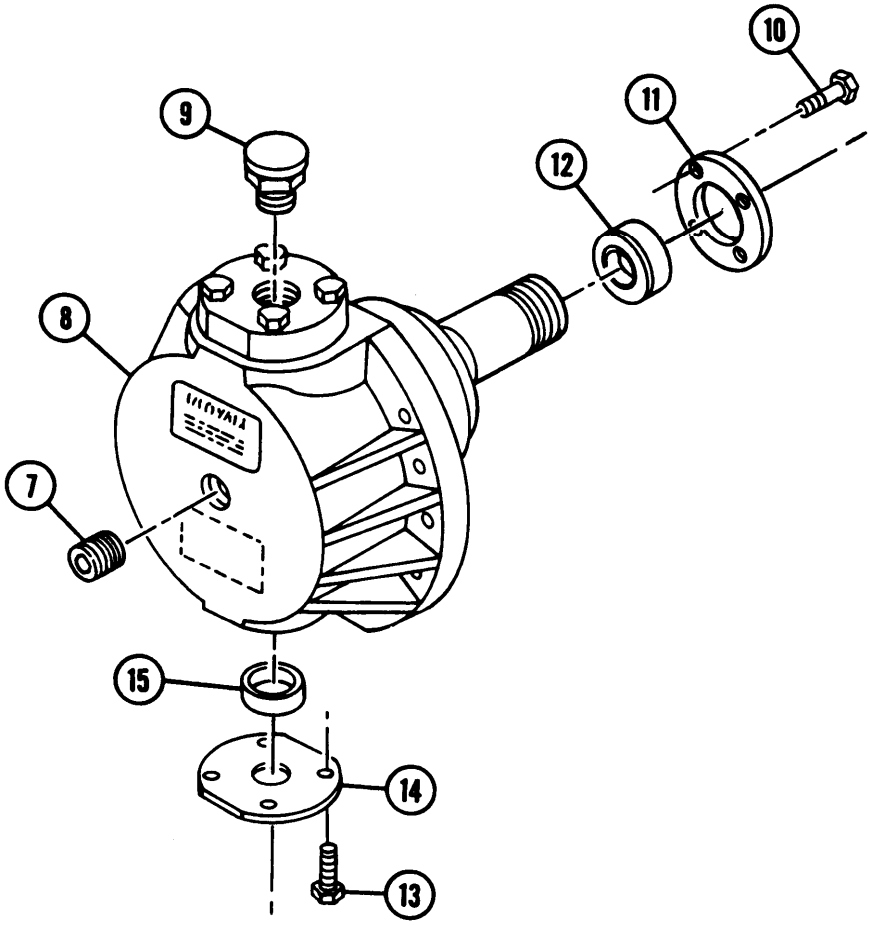

4 Replenish oil (TM 9-2350-311-20-1).

5 Install gearbox assembly (6), 10 washers (5), and 10 socket head screws (4).

6 Install impeller (3), new key washer (2), and nut (1) with bevel side down. Torque nut to 65-75 lb-ft (88-102 N•m) using socket. Lock key washer (2) tab.

7 Install two new decals (16) as required.

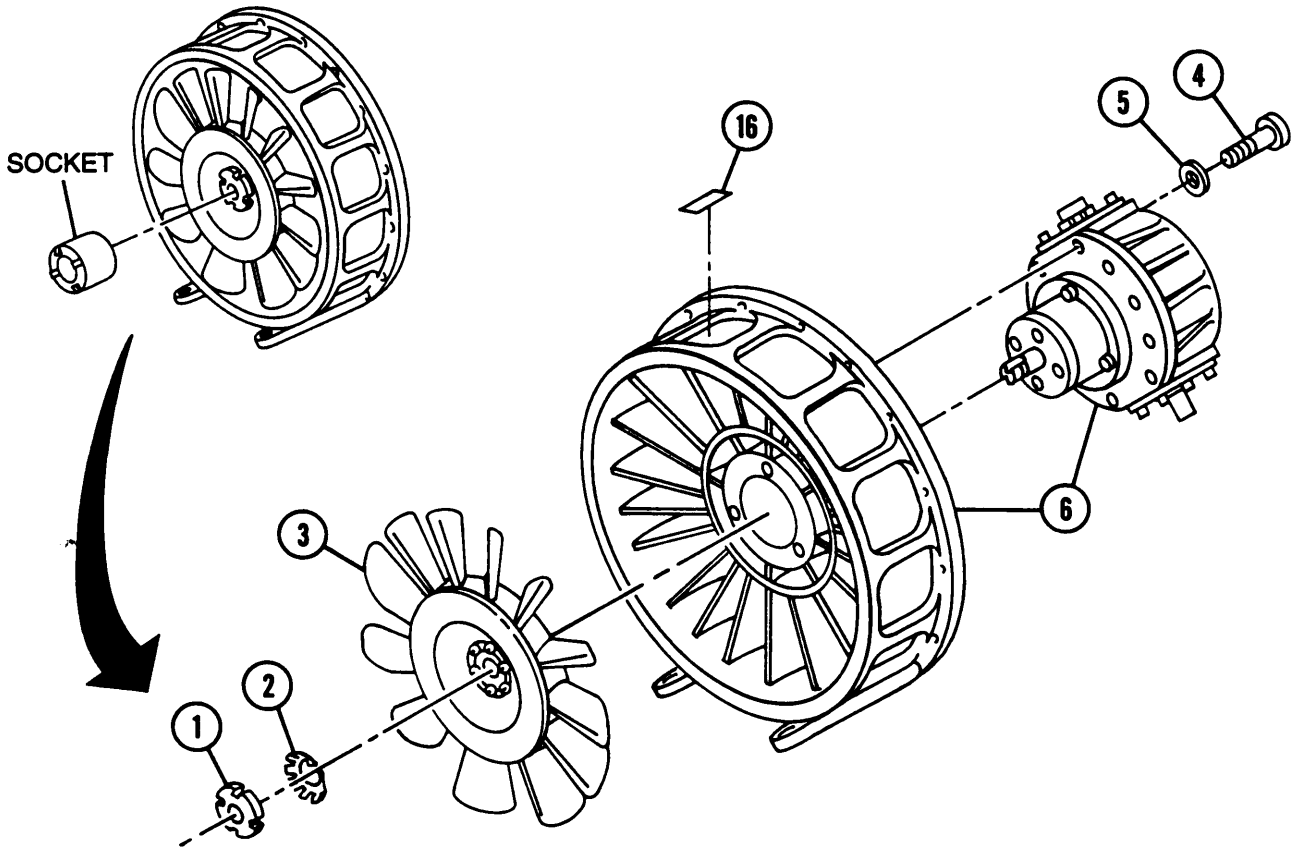


**NOTE**

FOLLOW-ON MAINTENANCE: Install cooling fans to shroud (para 6-3)

# CHAPTER 7
# ELECTRICAL SYSTEM

## GENERAL

This chapter describes and illustrates procedures for removal and installation of hull wiring harnesses and disassembly, inspection, repair, and assembly of the hull electrical components.

For maintenance and repair of the alternator, refer to TM 9-2920-225-34 or TM 9-2920-258-30&P. For maintenance and repair of the battery, refer to TM 9-6140-200-14. For maintenance and repair of the starter, refer to TM 9-2920-242-35, TM 9-2920-243-34, or TM 9-2920-248-35 as required. For repair of other engine electrical components, refer to TM 9-2815-202-34.

CONTENTS PAGE


Section I POWERPLANT AND HULL WIRING HARNESSES. . . . . ...7-2
7-1 POWERPLANT AND HULL WIRING HARNESS LISTING. . . . . ...7-2
7-2 CIRCUIT IDENTIFICATION AND ILLUSTRATION OF ELECTRICAL WIRING HARNESSES (M109A2/M109A3) . . . . . ...7-4
7-3 CIRCUIT IDENTIFICATION AND ILLUSTRATION OF ELECTRICAL WIRING HARNESSES (M109A4/M109A5) . . .. . . . . 7-6
7-4 ENGINE DISCONNECT BRACKET-TO-BULKHEAD WIRING HARNESS (M109A2/M109A3) (ENGINE MODEL 7083-7396) . . . . . .7-8
7-5 ENGINE DISCONNECT BRACKET-TO-BULKHEAD WIRING HARNESS (M109A2/M109A3) (ENGINE MODEL 7083-7391 ) . . . . . 7-12
7-6 DRIVER'S BULKHEAD-TO-MASTER RELAY WIRING HARNESS (M109A4/M109A5) (ENGINE MODEL 7083-7396) . . . . . 7-16
7-7 DRIVER'S BULKHEAD-TO-MASTER RELAY WIRING HARNESS (M109A4/M109A5) (ENGINE MODEL 7083-7391 ) . . . . . ... 7-20
7-8 BULKHEAD-TO-HEADLIGHTS/BILGE PUMP WIRING HARNESS. . . . . 7-24
7-9 BULKHEAD-TO-PORTABLE INSTRUMENT PANEL WIRING HARNESS (ENGINE MODEL 7083-7396) . . . . . 7-28
7-10 BULKHEAD-TO-PORTABLE INSTRUMENT PANEL WIRING HARNESS (ENGINE MODEL 7083-7391 ) . . . . . 7-38
7-11 BULKHEAD-TO-DRIVER'S INSTRUMENT PANEL WIRING HARNESS. . . . . .7-48
7-12 POWER LEAD WIRING HARNESS (M109A2) . . . . . 7-60
7-13 POWER LEAD (M109A2/M109A3) . . . . . 7-67
7-14 POWER LEAD (M109A4/M109A5) . . . . . .7-72
Section II HULL ELECTRICAL COMPONENTS . . . . . 7-78
7-15 RECTIFIER (M109A2/M109A3) . . . . . 7-78
7-16 RECTIFIER (M109A4/M109A5) . .. .... . . . . . 7-89

## SECTION I. POWERPLANT AND HULL WIRING HARNESSES

## 7-1 POWERPLANT AND HULL WIRING HARNESS LISTING

| Circuit/ Wire No. | Circuit Name: |
|---|---|
| 1 | Alternator fieLd circuit |
| 2 | Power lead (rectifier-to-voltage regulator to wire) |
| 3 | Alternator ground circuit |
| 7 | Battery ground leads |
| 10 | Power lead (sLave start receptacle-to-circuit breaker paneL |
| 14B | Bilge pump circuit breaker-to-starter solenoid energizing lead |
| 15 | Power lead-to-light switch (driver's instrument panel) |
| 16 | Light switch-to-headlight dimmer switch lead |
| 17 | Dimmer switch-to-headlight high beam lead |
| 18 | Dimmer switch-to-headlight lower beam lead |
| 19 | Not used |
| 20 | Light switch-to-blackout (B. O.) marker front light lead |
| 21 | Light switch-to-service taillight lead |
| 22 | Light switch-to-service stoplight lead |
| 23 | Light switch-to-B.O. stoplight |
| 24 | Light switch-to-B.O. marker light rear lead |
| 27 | Engine instrumentation and master warning light energizing lead |
| 27B | Voltage regulator cutout relay energizing lead |
| 28 | Fuel gage energizing lead |
| 29 | Fuel tank selector switch-to-upper fuel tank transmitter lead |
| 29-31 | Fuel tank selector switch-to-fuel tank gage lead |
| 31 | Fuel tank selector switch-to-lower fuel tank transmitter lead |
| 33A | Engine coolant temperature transmitter lead |
| 36 | Engine oil pressure transmitter lead |
| 38 | Driver’s dome light lead |
| 37-38 | Circuit breaker-to-auxiliary outlet and driver’s dome light power lead |
| 40 | Panel lights for driver’s instrument panel and portable instrument panel power lead |
| 40A | Battery/alternator indicator gage lead |
| 41 | Driver’s intercommunications circuit 1 lead |
| 42 | Driver's intercommunications circuit 2 lead |
| 43 | Driver's intercommunications circuit 3 lead |
| 47 | Slip ring segment board power lead (from wire 10 to segment board) |
| 48 | Slop ring segment board-to-driver’s intercommunications power lead |
| 49 | Slave start receptacle power lead |
| 50 | Slave start receptacle ground lead |
| 68 | Battery interconnection cables |
| 75 | Stoplight switch |
| 76 | Fuel pump circuit leads |
| 81 | Battery-to-master relay power lead |
| 82 | Master relay-to-starter power lead |
| 91 | Headlight ground lead |
| 159 | Personnel vent fan switch power lead (from circuit breaker-to-switch internal accessory control box) |

| | |
|---|---|
| 159A | Personnel vent fan switch-to-motor lead |
| 159B | Personnel vent fan switch-to-motor lead |
| 159C | Personnel vent fan switch-to-motor lead |
| 321 | Transmission oil pressure transmitter lead |
| 324 | Transmission oil temperature transmitter lead |
| 352A | Low level coolant switch-to-coolant indicator lead |
| 352B | Low level coolant switch-to-coolant indicator lead |
| 400 | Personnel heater input |
| 400A | Circuit breaker-to-heat selector switch power lead (internal accessory control box) |
| 400L | Personnel heater selector switch-to-indicator lamp lead (internal accessory control box) |
| 400-459B | Power lead from voltage regulator-to-459B driver's bulkhead |
| 401 | Personnel heater selector switch-to-heater restriction solenoid lead |
| 402 | Personnel heater selector switch-to-heater power lead |
| 402A | Personnel heater fuel pump from wire 402 |
| 405 | Accessory control box-to-heater flame detector switch |
| 407 | Personnel heater selector switch-to-heater motor and flame detector switch |
| 407L | Personnel heater selector switch-to-indicator lamp lead |
| 415 | Air cleaner blower motor leads |
| 415A | Air cleaner blower motor relay pressure switch lead |
| 76B | In-tank fuel pumps and generator system relay switch to in-tank fuel pump lead assembly |
| 416 | Air cleaner blower motor ground leads |
| 438 | Circuit breaker-to-Nuclear, Biological, and Chemical (NBC) power switch |
| 439 | NBC power switch-to-components |
| 439A | Air purifier power lead |
| 439B | NBC driver's heater power lead |
| 439C | NBC loader's heater power lead |
| 439L | NBC indicator light lead |
| 450 | Bilge pump switch-to-bilge pump relay lead |
| 452 | Bilge pump relay-to-bilge pump motor power lead |
| 452A | Bilge pump circuit breaker power lead |
| 415B | Air cleaner blower motor relay-to-neutral safety switch |
| 452B | Bilge pump circuit breaker-to-bilge pump relay power lead |
| 459 | Master switch power lead |
| 459A | Master switch power lead |
| 459L | Master switch warning lamp power lead |
| 459B | Connector tie-in-to-400-459B power lead 415 |
| 486 | Flame heater master switch-to-motor and pump assembly and ignition unit power lead (engine model 7083-7396 or glow plug controller-to-glow plug switch (engine model 7083-7391) |
| 486A | Flame heater switch-to-flame heater fuel solenoid lead (engine model 7083-7396) or glow plug controller-to-glow plug switch (engine model 7083-7391) |
| 486L | Flame heater system warning lamp lead (engine model 7083-7396) |
| 500 | Alternator phase A circuit-to-rectifier lead |
| 501 | Alternator phase B circuit-to-rectifier lead |
| 502 | Alternator phase C circuit-to-rectifier lead |
| 509 | Master warning light circuit power lead |
| 509A | Engine coolant temperature switch lead |
| 509B | Engine oil pressure switch lead |
| 509C | Transmission oil pressure switch lead |
| 509D | Transmission oil temperature switch lead |
| 509E | Parking brake warning lamp lead |
| 514 | Dimmer switch to headlight B.O. high beam lead |
| 515 | Dimmer switch to headlight B.O. low beam lead |
| 514 | Not used |
| 519 | Dimmer switch to high beam indicator lamp lead |

## 7-1 POWERPLANT AND HULL WIRING HARNESS LISTING — CONTINUED

| Circuit/ Wire No. | Circuit Name: |
|---|---|
| 520 | Not used |
| 588 | Circuit breaker-to-fuel pump primer switch power lead |
| 588L | Not used |
| L1 and L2 | Telephone circuit leads |
| 588 | Not used |

## 7-2 CIRCUIT IDENTIFICATION AND ILLUSTRATION OF WIRING HARNESSES (M109A2/M109A3)

**NOTE**

Electrical cables are marked with wire-numbered metal tags attached to junction of the terminal of cable. All electrical ciruits shown in schematics and wiring diagrams are identified by wire numbers listed in each area.

LEGEND

1 Wiring harness 12268102— Alternator-to-rectifier
2 Wire 82— From master relay to wire 82/49
3 Wire 27B — From wiring harness 12268100 to voltage regulator
4 Wire 2 — From voltage regulator to wire 81
5 Lead 11593784 or 12260266— From bulkhead connector to slave start receptacle (wire 49) and to circuit breaker panel (wire 10)
6 Wiring harness 10925829 — From accessory control box to air cleaner blower assembly
7 Wiring harness 10925829 — From accessory control box to heater fuel pump and personnel heater
8 Lead 11593784 or 12260266— From circuit breaker to:
9 Slip ring segment board (47)
10 Telephone terminal (21 and 22)
11 Accessory control box (37 and 38)
12 Wiring harness 12260298 — From driver's compartment/connector to portable instrument panel
13 Wire 7 — Battery to ground
14 Wiring harness 12260287 — Bulkhead connector to driver's compartment connector bracket
15 Wiring harness 11594268 — Bulkhead connector-to-driver's instrument panel
16 Wire 68 — Battery positive-to-negative connectors
17 Wire 81 — From batteries to master relay
18 Wiring harness 11593806 — Rectifier-to-voltage regulator
19 Wire 82/49 — Engine starter from lower powerplant connector bracket to bulkhead connector
20 Wiring harness 12268100— Engine instrumentation bulkhead connector-to-powerplant connector bracket
21 Ground wire — Powerplant to hull
22 Wiring harness 12268102 — From bulkhead connector to engine instrumentation
23 Wire 82 — From bulkhead connector to engine starter
24 Wiring harness 10921380 — To headlight assemblies
25 Wire 452 — Bilge pump relay to bilge pump
26 Wire 29-31 — To fuel level transmitters
Wires 76— To fuel tank fuel pumps
27 Wire 352A and 352B — From wiring harness 12268102 to aeration detector

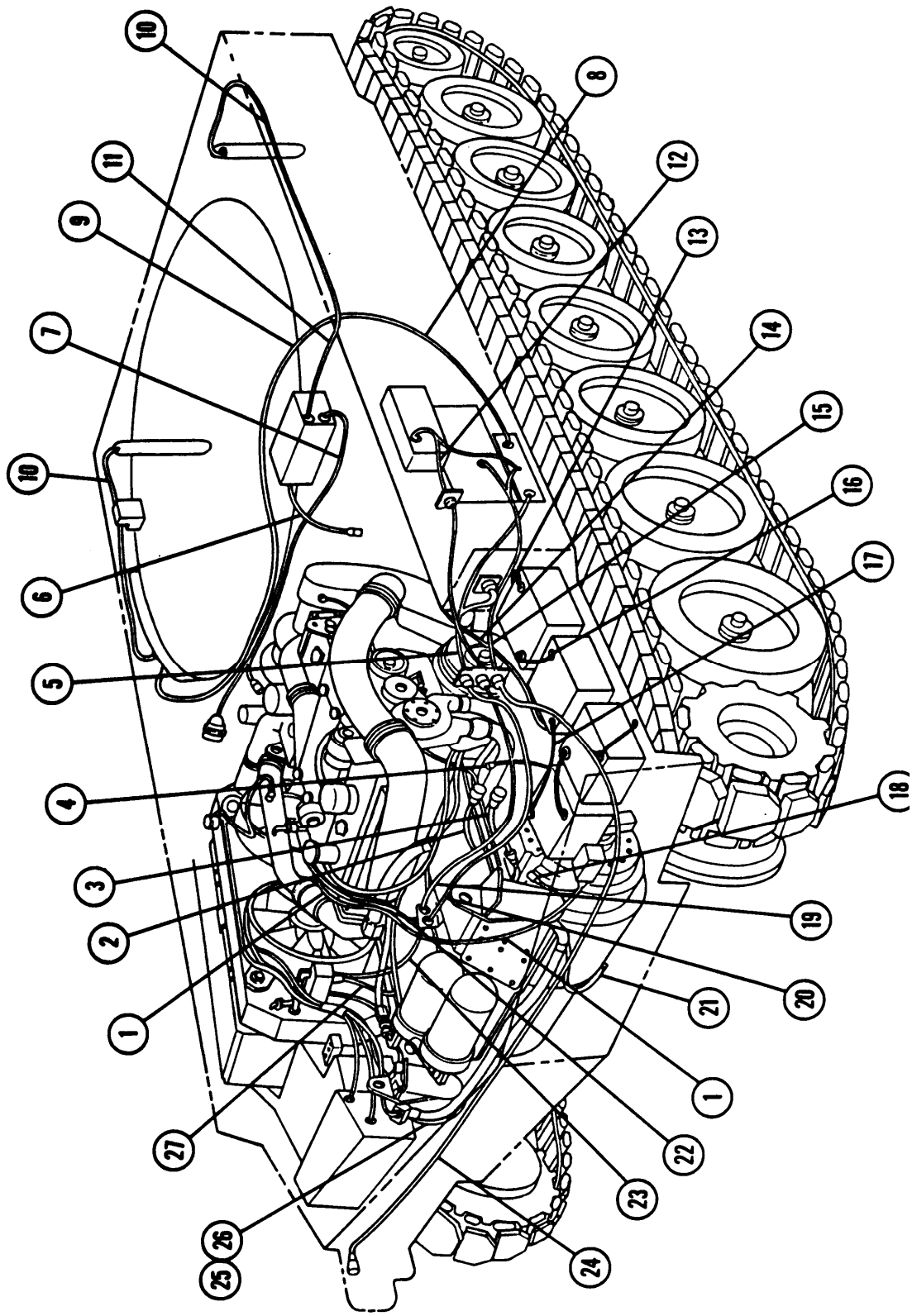


HULL ELECTRICAL WIRING HARNESS (M109A2/M109A3)
ENGINE MODEL 7083-7396 SHOWN

## 7-3 CIRCUIT IDENTIFICATION AND ILLUSTRATION OF WIRING HARNESSES (M109A4/M109A5)

**NOTE**

Electrical cables are marked with wire-numbered metal tags attached to junction of the terminal of cable. All electrical circuits shown in schematics and wiring diagrams are identified by wire numbers listed in each area.

LEGEND

1 Wiring harness 12268308 — Alternator to rectifier
2 Wire 82— From master relay to wire 82/49
3 Wire 27B — From wiring harness 12268418 — Engine instrumentation bulkhead connector to powerplant connector bracket
4 wire 2 — From voltage regulator to wire 81
5 Lead 12268304 — From bulkhead connector to slave start receptacle (wire 49) and to circuit breaker panel (wire 10)
6 Wiring harness 12268308 — From bulkhead connector to engine instrumentation
7 Wiring harness 10925829 — From accessory control box to heater fuel pump and personnel heater
8 Lead 12268419 — Bulkhead to override switch lead
9 Wiring harness 12353400 — NATO slave start-to-external power receptacle wiring harness
10 Wiring harness 12352794 — Ventilated facepiece system wiring harness
11 Lead 12268304 — From circuit breaker to:
12 Slip ring segment board (47)
13 Telephone terminal (21 and 22)
14 Accessory control box (37 and 38)
15 Wiring harness 12260298— From driver's compartment/connector to portable instrument panel
16 Wire7— Battery to ground
17 Wiring harness 12260287— Bulkhead connector to driver's compartment connector bracket
18 Wiring harness 11594268— bulkhead connector to driver's instrument panel
19 Wire 68— Battery positive-to-negative connectors
20 Wiring harness 12353402— Driver's bulkhead-to- batteries wiring harness
21 Wire 81 — From batteries to master relay
22 Wiring harness 12268303— Rectifier-to-voltage regulator
23 Wiring harness 12353401 — Engine disconnect bracket- to-batteries lead assembly
24 Wiring harness 12268418— Engine instrumentation bulkhead connector-to-powerplant connector bracket
25 Wire 82— From bulkhead connector to engine starter
26 Wiring harness 10921380— To headlight assemblies
27 Wire 452— Bilge pump relay to bilge pump
28 Wire 29-31 — To fuel level transmitters
Wires 76— To fuel tank fuel pumps
29 Starter to engine electrical disconnect — Wiring harness 12353072

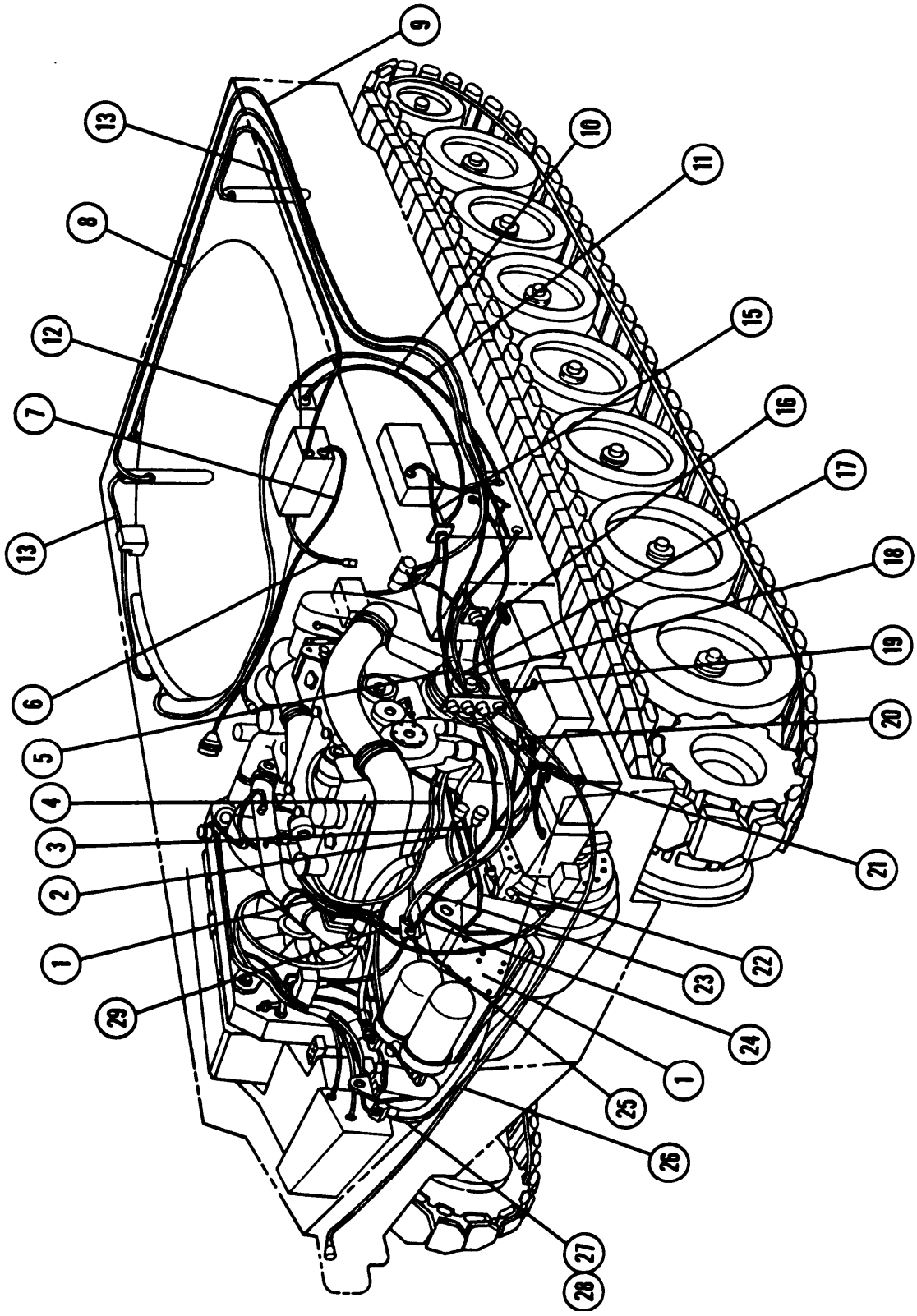


HULL ELECTRICAL WIRING HARNESS (M109A4/M109A5)
ENGINE MODEL 7083-7396 SHOWN

## 7-4 ENGINE DISCONNECT BRACKET-TO-BULKHEAD WIRING HARNESS (M109A2/M109A3) (ENGINE MODEL 7083-7396)

This task covers: a. Removal b. Disassembly c. Assembly d. Installation

### INITIAL SETUP

**Applicable Configurations**
M109A2/M109A3

**Tools**
**General mechanic's** tool kit (item 14, Appx C)

**Materials/Parts**
Electrical tape — black (item 25, Appx B)
Lockwasher (item 23, Appx F)
Lockwashers (2) (item 25, Appx F)
lockwasher (item 42, Appx F)

**References**
TM 9-2350-311-20-1

**Equipment Conditions**
Batteries disconnected (TM 9-2350-311-20-1)

| Connector No. | Electrical Lead To: | Wire No. |
|---|---|---|
| 1 | Battery assembly to master relay | 81 |
| 2 | Aeration detector-to-coolant indicator | 352B |
| 3 | Aeration detector-to-coolant indicator | 352A |
| 4 | Flame heater-to-flame heater switch | 466A |
| 5 | Engine oil pressure transmitter-to-engine oil pressure gage switch | 36 |
| 6 | Engine coolant temperature transmitter-to-engine water temperature gage | 33A |
| 7 | Transmission oil temperature transmitter-to-transmission oil temperature gage | 324 |
| 8 | Transmission oil pressure transmitter-to-transmission oil pressure switch | 321 |
| 9 | High/low temperature and pressure switches/transmitters-to-master warning light | 509 |
| 10 | Not used | 588 |
| 11 | Flame heater motor pump-to-flame heater switch | 466 |
| 12 | In-tank fuel pumps and generator system relay | 76B |
| 13 | Regulator cutoff relay coil energizer | 27B |
| 14 | Air cleaner blower motor circuit | 415 |
| 15 | Master switch voltage regulator lead | 400-459B |
| 16 | Engine starter circuit (starter relay bilge pump circuit breaker neutral safety switch) | 14/146 |
| 17 | Voltage regulator-to-master relay lead | 2 |
| 18 | Ground wire | 3 |
| 19 | Engine bracket disconnect connector | |
| 20 | Voltage regulator connector | |
| 21 | Starter relay connector | |
| 22 | Bilge pump circuit breaker lead | |
| 23 | Driver's bulkhead connector | |
| 24 | Battery connectors | |
| 25 | Master relay connectors | |

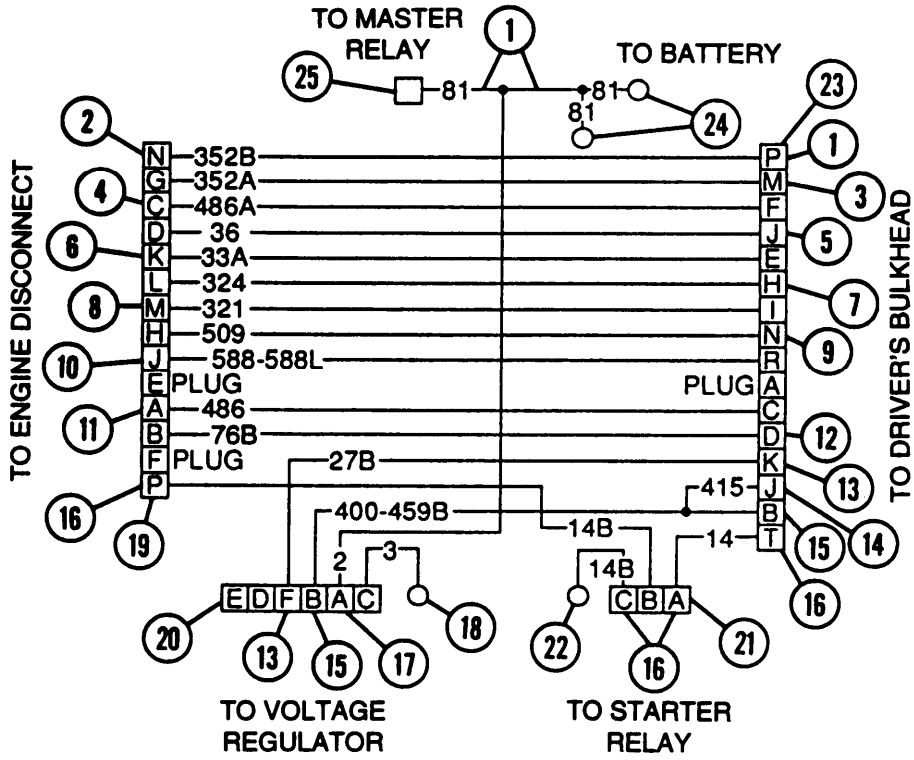


WIRING DIAGRAM

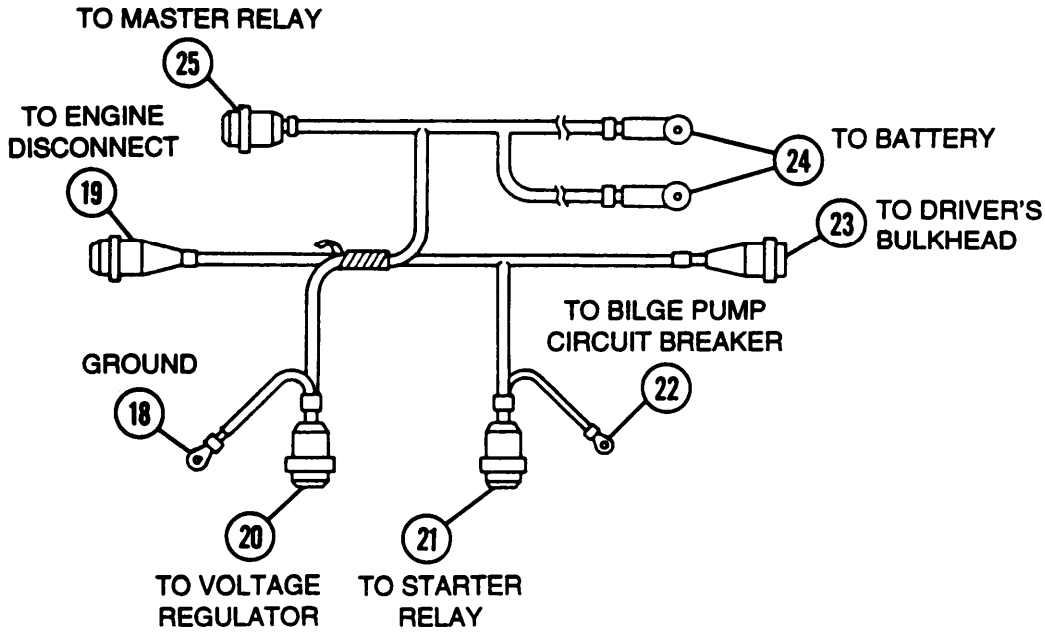

## 7-4 ENGINE DISCONNECT BRACKET-TO-BULKHEAD WIRING HARNESS (M109A2/M109A3) (ENGINE MODEL 7083-7396) – CONTINUED

**a. Removal**

1 Remove two screws (26), two lockwasher (27), two nuts (28), and two connectors (29) from batteries (30). Discard lockwasher's.

2 Remove nut (31), lockwasher (32), and ground wire (33) from voltage regulator mount (34). Discard lockwasher.

3 Remove nut (35), lockwasher (36), and lead (37) from bilge pump circuit breaker (36). Discard lockwasher.

4 Disconnect five connector (39 thru 43).

5 Remove engine-to-bulkhead wiring harness (44).

**b. Disassembly**

1 Remove electrical tape only for sections being disassembled.

2 Separate/isolate wiring harness branches.

3 Disassemble wiring harness branches (TM 9-2350-311-20-1).

**c. Assambly**

1 Assemble wiring harness branches (TM 9-2350-311-20-1).

2 Apply electrical tape only for sections being assembled.

**d. Installation**

1 Install engine-to-bulkhead wiring harness (44).

2 Connect five connectors (39 thru 43).

3 Install lead (37), new lockwasher (36), and nut (35) to bilge pump circuit breaker (38).

4 Install ground wire (33), new lockwasher (32), and nut (31) to voltage regulator mount (34).

5 Install two connectors (29), two nuts (28), two new lockwasher's (27), and two screws (26) to batteries (30).

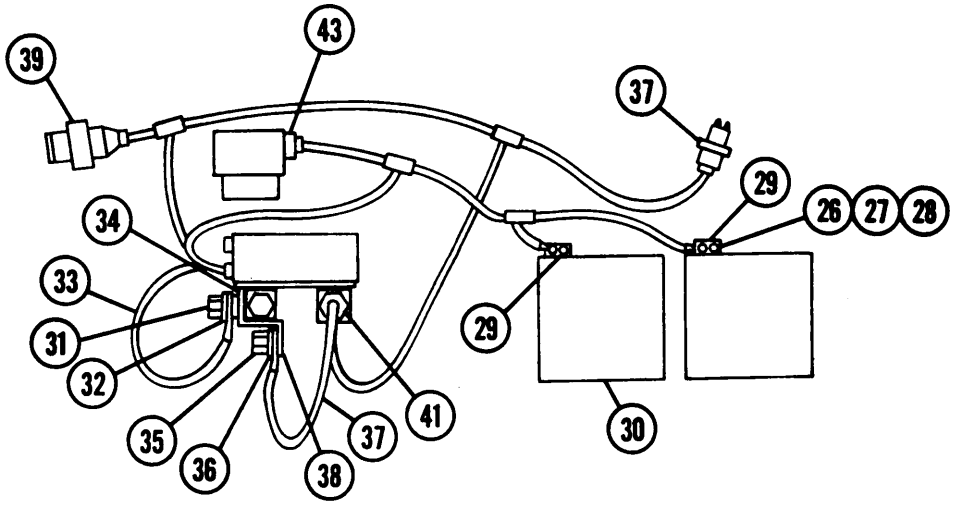


FRONT VIEW

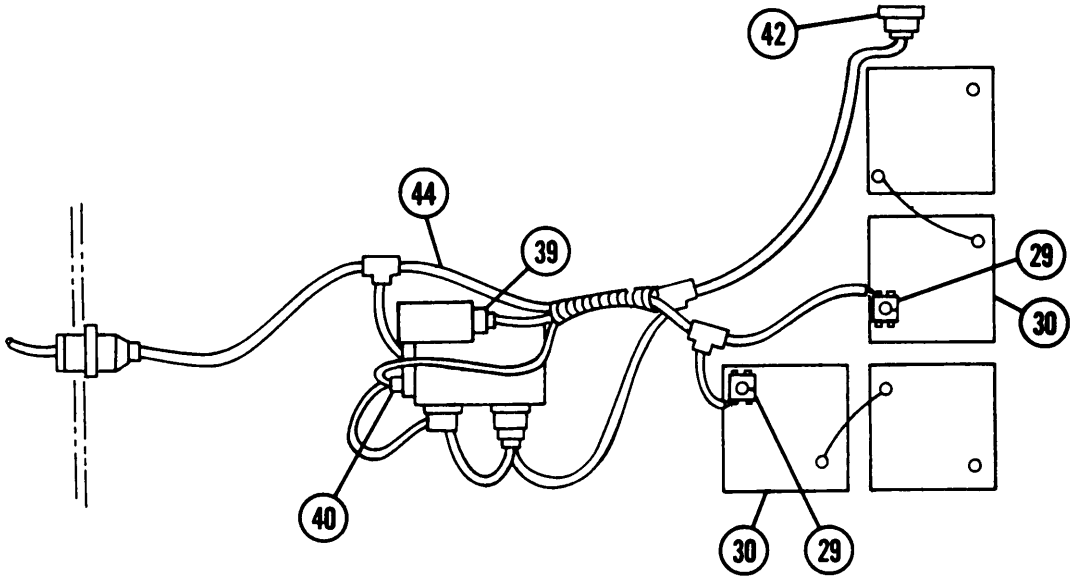


TOP VIEW

**NOTE**

FOLLOW-ON MAINTENANCE: Connect batteries (TM 9-2350-311-20-1)

## 7-5 ENGINE DISCONNECT BRACKET-TO-BULKHEAD WIRING HARNESS (M109A2/M109A3) (ENGINE MODEL 7083-7391)

This task covers: a. Removal b. Disassembly c. Assembly d. Installation

### INITIAL SETUP

**Applicable Configurations**
M109A2/M109A3

**Tools**
General mechanic's tool kit (item 14, Appx C)

**Materials/Parts**
Electrical tape — black (item 25, Appx B)
Lockwasher (item 23, Appx F)
Lockwashers (2) (item 25, Appx F)
Lockwashers (2) (item 42, Appx F)

**References**
TM 9-2350-311 -20-1

**Equipment Conditions**
Batteries disconnected (TM 9-2350-311-20-1)

| Connector No. | Electrical Lead To: | Wire No. |
|---|---|---|
| 1 | Battery assembly to master relay | 81 |
| 2 | Aeration detector-to-coolant indicator | 352B |
| 3 | Aeration detector-to-coolant indicator | 352A |
| 4 | Glow plug controller-to-glow plug lamp | 486A |
| 5 | Engine oil pressure transmitter-to-engine oil pressure gage switch | 36 |
| 6 | Engine coolant temperature transmitter-to-engine water temperature gage | 33A |
| 7 | Transmission oil temperature transmitter-to-transmission oil temperature gage | 324 |
| 8 | Transmission oil pressure transmitter-to-transmission oil pressure switch | 321 |
| 9 | High/low temperature and pressure switches/transmitters-to-master warning light | 509 |
| 10 | Not used | 588 |
| 11 | Glow plug controller-to-glow plug switch | 486 |
| 12 | In-tank fuel pumps and generator system relay | 76B |
| 13 | Regulator cutoff relay coil energizer | 27B |
| 14 | Air cleaner blower motor circuit | 415 |
| 15 | Master switch voltage regulator lead | 400-459B |
| 16 | Engine starter circuit (starter relay bilge pump circuit breaker neutral safety switch) | 14/14B |
| 17 | Voltage regulator-to-master relay lead | 2 |
| 18 | Ground wire | 3 |
| 19 | Engine bracket disconnect connector | |
| 20 | Voltage regulator connector | |
| 21 | Starter relay connector | |
| 22 | Bilge pump circuit breaker lead | |
| 23 | Driver's bulkhead connector | |
| 24 | Battery connectors | |
| 25 | Master relay connectors | |

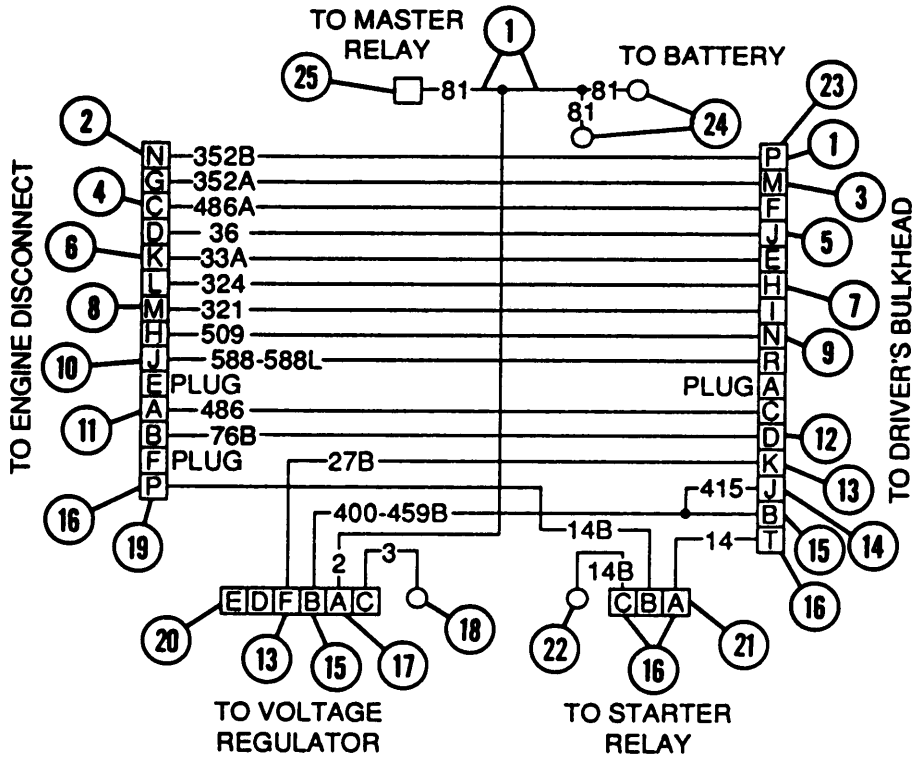


WIRING DIAGRAM

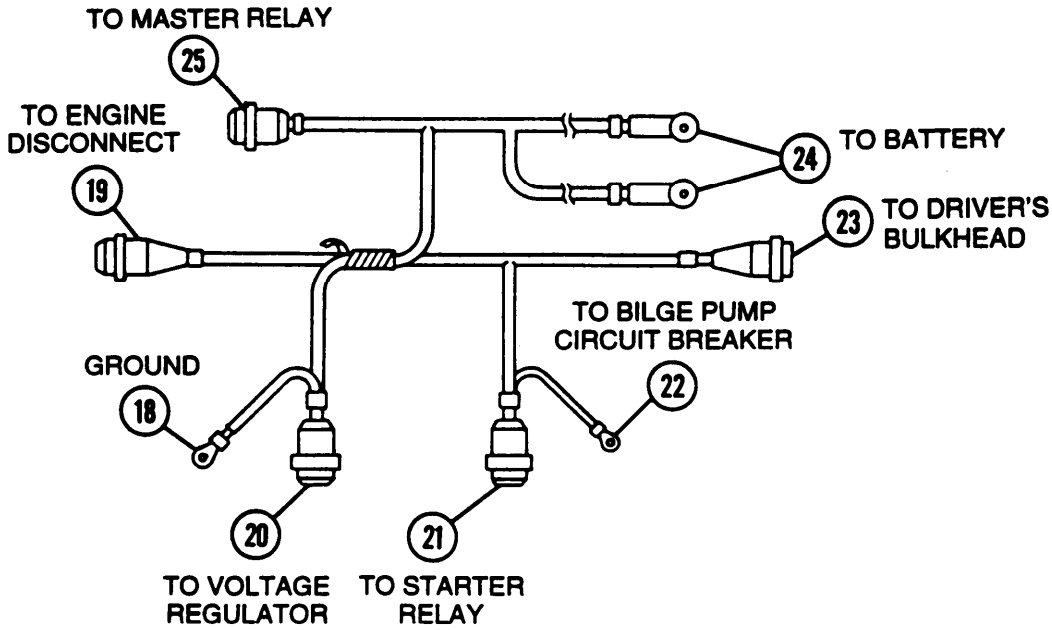

## 7-5 ENGINE DISCONNECT BRACKET-TO-BULKHEAD WIRING HARNESS (M109A2/M109A3) (ENGINE MODEL 7083-7391) – CONTINUED

**a. Removal**

1 Remove two screws (26), two lockwasher (27), two nuts (28), and two connectors (29) from batteries (30). Discard lockwasher.

2 Remove nut (31), lockwasher (32), and ground wire (33) from voltage regulator mount (34). Discard lockwasher.

3 Remove nut (35), lockwasher (36), and lead (37) from bilge pump circuit breaker (38). Discard lockwasher.

4 Disconnect five connectors (39 thru 43).

5 Remove engine-to-bulkhead wiring harness (44).

b. Disassembly

1 Remove electrical tape only for sections being disassembled.

2 Separate/isolate wiring harness branches.

3 Disassemble wiring harness branches (TM 9-2350-311-20-1).

c. **Assembly**

1 Assemble wiring harness branches (TM 9-2350-311-20-1).

2 Apply electrical tape only for sections being assembled.

**d. Installation**

1 Install engine-to-bulkhead wiring harness (44).

2 Connect five connectors (39 thru 43).

3 Install lead (37), nut (35), and new lockwasher (36) to bilge pump circuit breaker (38).

4 Install ground wire (33), nut (31), and new lockwasher (32) to voltage regulator mount (34).

5 Install two connectors (29), two screws (26), two new lockwasher (27), and two nuts (28) to batteries (30).

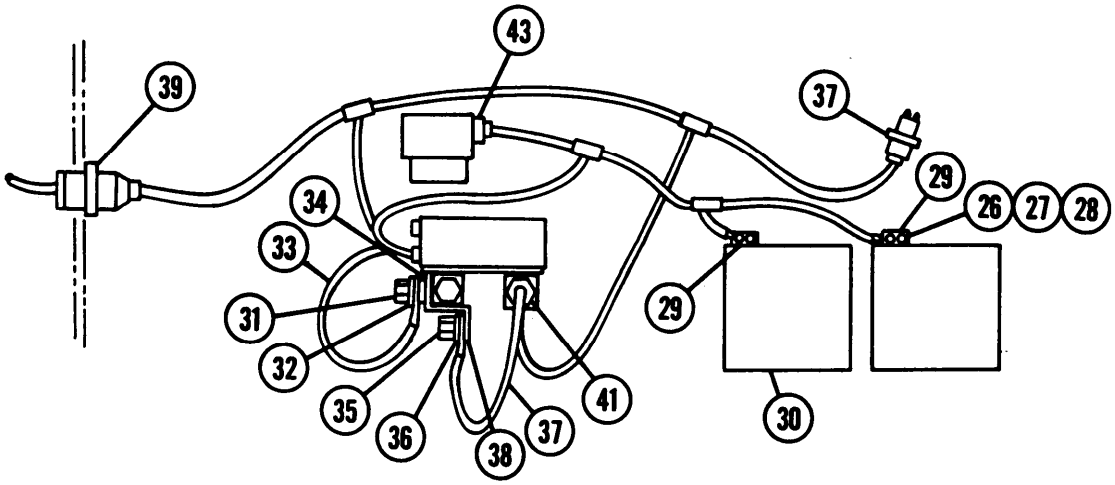


FRONT VIEW

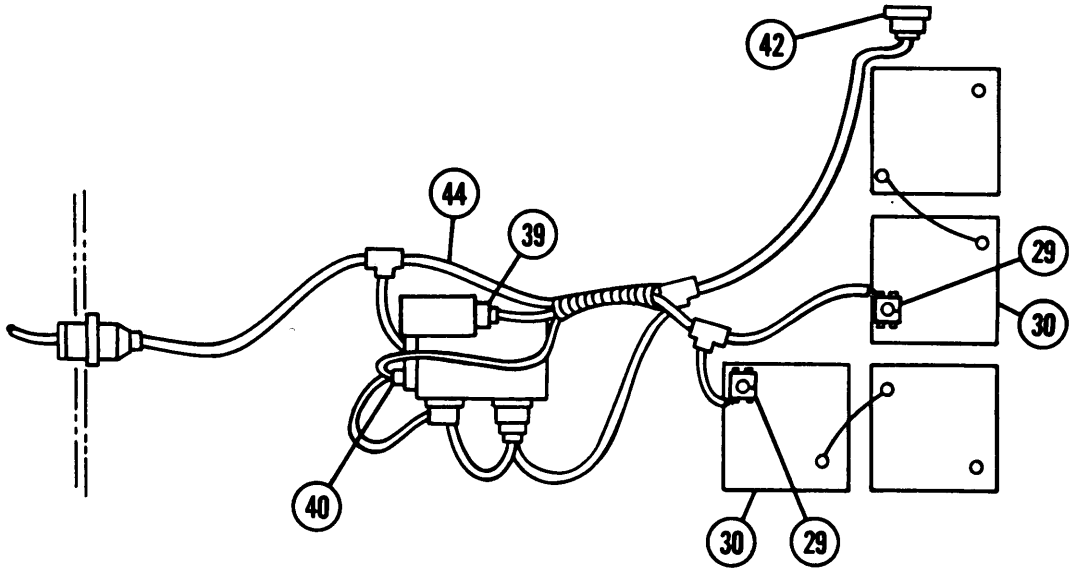


TOP VIEW

**NOTE**

FOLLOW-ON MAINTENANCE: Connect batteries (TM 9-2350-311-20-1)

## 7-6 DRIVER'S BULKHEAD-TO-MASTER RELAY WIRING HARNESS (M109A4/M109A5) (ENGINE MODEL 7083-7396)

This task covers: a. Removal b. Disassembly c. Assembly d. Installation

**INITIAL SETUP**

**Applicable Configurations**
M109A4/M109A5

**Tools**
General mechanic's tool kit (item 14, APPX C)

**Materials/Parts**
Electrical tape — black (item 25, Appx B)
Lockwasher (item 23, Appx F)
Lockwashers (2) (item 25, Appx F)
Lockwashers (4) (item 33, Appx F)
Lockwashers (4) (item 34, Appx F)
Lockwasher (item 35, Appx F)

**References**
TM 9-2350-311-20-1

**Equipment Conditions**
Batteries disconnected (TM 9-2350-311-20-1)

| Connector No. | Electrical Lead To: | Wire No. |
|---|---|---|
| 1 | Battery assembly-to-master relay | 81 |
| 2 | Aeration detector-to-coolant indicator | 352B |
| 3 | Aeration detector-to-coolant indicator | 352A |
| 4 | Flame heater-to-flame heater switch | |
| 5 | Engine oil pressure transmitter-to-engine oil pressure gage switch | 36 |
| 6 | Engine coolant temperature transmitter-to-engine water temperature gage | 33A |
| 7 | Transmission oil temperature transmitter-to-transmission oil temperature gage | 324 |
| 8 | Transmission oil pressure transmitter-to-transmission oil pressure switch | 321 |
| 9 | Hig/low temperature and pressure switches/transmitters-to-master warning light | 509 |
| 10 | Air cleaner blower motor switch-to-air cleaner blower motor assembly | 415B-76B |
| 11 | Regulator cutoff relay coil energizer | 27B |
| 12 | Air cleaner blower motor circuit | 415 |
| 13 | Master switch voltage regulator lead | 400-4596 |
| 14 | Engine starter circuit (starter relay bilge pump circuit breaker neutral safety switch) | 14/14B/GND |
| 15 | Voltage regulator-to-master relay lead | 2 |
| 16 | Ground wire | 4 |
| 17 | Engine bracket disconnect connector | |
| 18 | Voltage regulator ground | |
| 19 | Engine disconnect | |
| 20 | Voltage regulator connector | |
| 21 | Starter protection relay | 503 |
| 22 | Starter protection relay ground | |
| 23 | Driver's bulkhead connector-to-starter protection relay | 14C |
| 24 | Driver's bulkhead | |
| 25 | Driver's bulkhead | |
| 26 | Battery positive tenminal | 81 |
| 27 | Master relay | 81 |

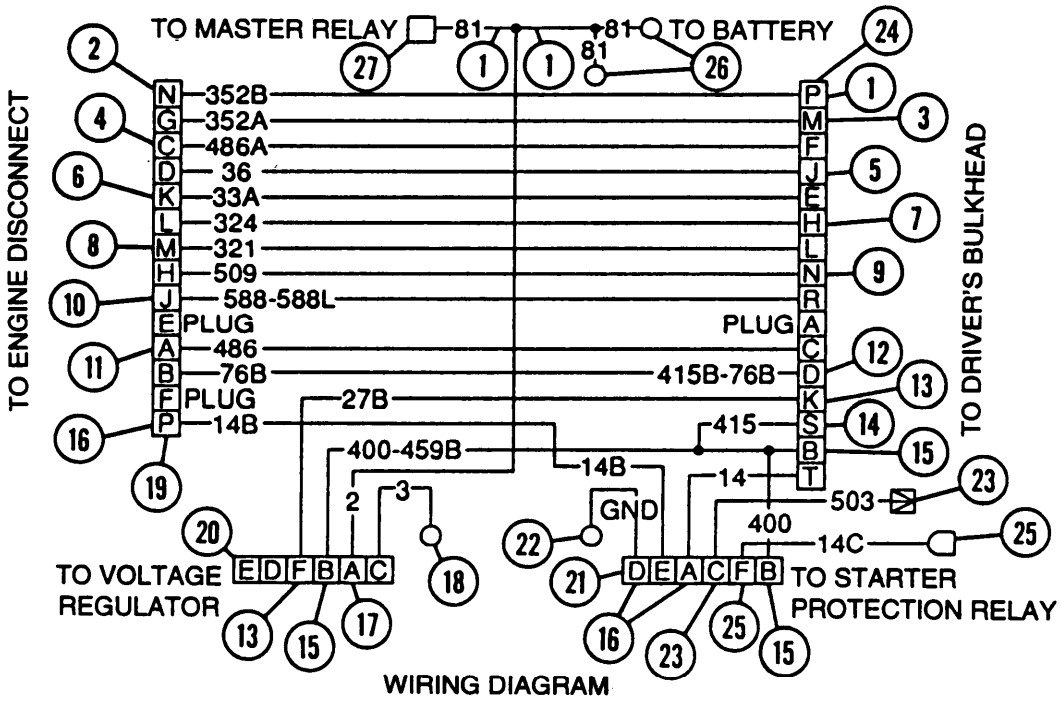


WIRING DIAGRAM

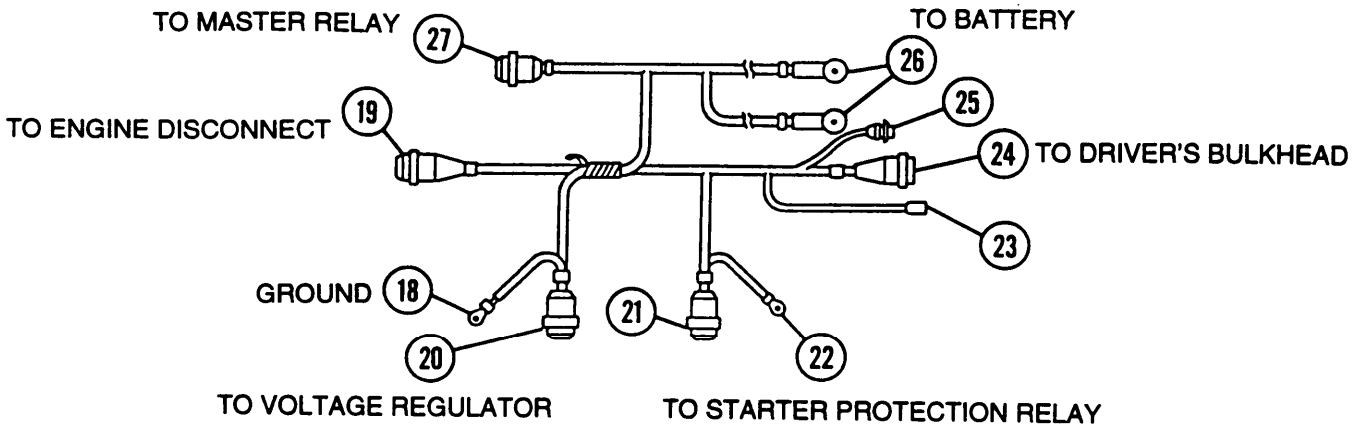

## 7-6 DRIVER'S BULKHEAD-TO-MASTER RELAY WIRING HARNESS (M109A4/M109A5) (ENGINE MODEL 7083-7396) – CONTINUED

**a. Removal**

1 Remove two screws (28), two lockwashers (29), two nuts (30), and two connectors (26) from batteries (31). Discard lockwashers.

2 Remove screw (32), washer (33), lockwasher (34), nut (35), and strap (36). Discard lockwasher.

3 Remove screw (37), lockwasher (38), washer (39), and two ground wires (18 and 22) from voltage regulator mount (40). Discard lockwasher.

4 Disconnect connector (23) at wire 503.

5 Disconnect two wiring harnesses (41) from driver's compartment side of bulkhead (42).

6 Remove eight nuts (43), eight lockwashers (44), eight washers (45), and eight screws (46). Remove two connectors (24 and 25) from bulkhead (42). Discard lockwashers.

7 Disconnect four electrical connectors (19, 20, 21, and 27) and remove wiring harness.

**b. Disassembly**

1 Remove electrical tape only for sections being disassembled.

2 Separate/isolate wiring harness branches.

3 Disassemble wiring harness branches (TM 9-2350-311-20-1).

**c. Assembly**

1 Assemble wiring harness branches (TM 9-2350-311-20-1).

2 Apply electrical tape only for sections being assembled.

**d. Installation**

1 Install wiring harness and connect four electrical connectors (19, 20,21, and 27).

2 Install two connectors (24 and 25), eight screws (46), eight washers (45), eight new lockwashers (44), and eight nuts (43) to bulkhead (42).

3 Connect two wiring harnesses (41) to driver's compartment side of bulkhead (42).

4 Connect connector (23) at wire 503.

5 Install two ground wires (18 and 22), washer (39), new lockwasher (38), and screw (37) to voltage regulator mount (40).

6 Install strap (36), nut (35), new lockwasher (34), washer (33), and screw (32).

7 Install two connectors (26), two nuts (30), two new lockwashers (29), and two screws (28) to batteries (31).

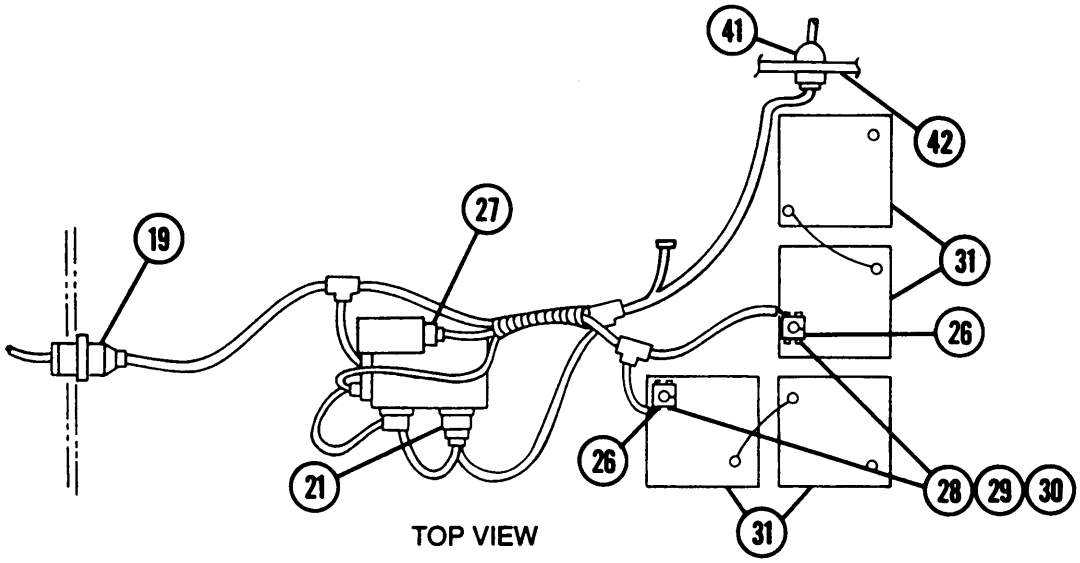


TOP VIEW

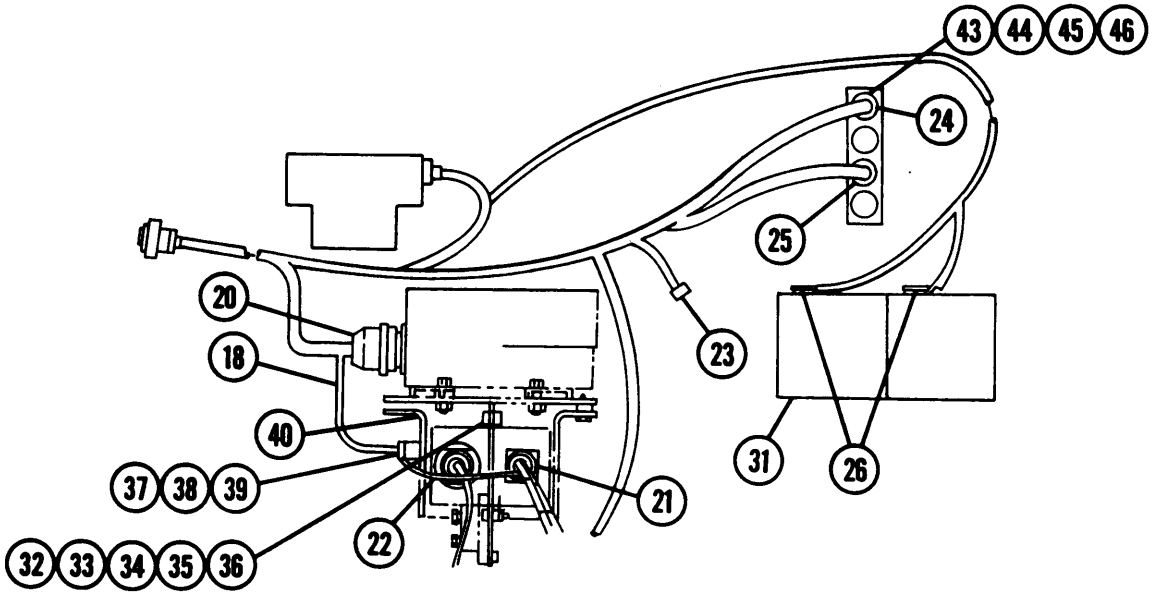


FRONT VIEW

**NOTE**

FOLLOW-ON MAINTENANCE: Connect batteries (TM 9-2350-11-20-1)

## 7-7 DRIVER'S BULKHEAD-TO-MASTER RELAY WIRING HARNESS (M109A4/M109A5) (ENGINE MODEL 7083-7391)

This task covers: a. Removal b. Disassembly c. Assembly d. Installation

### INITIAL SETUP

**Applicable Configurations**
M109A4/M109A5

Tools
General mechanic's tool kit (item 14, Appx C)

**Materials/Parts**
Electrical tape — black (item 25, Appx B)
Lockwasher (item 23, Appx F)
Lockwashers (2) (item 25, Appx F)
Lockwashers (4) (item 33, Appx F)
Lockwashers (4) (item 34, Appx F)
Lockwasher (item 35, Appx F)

**References**
TM 9-2350-311-20-1

**Equipment Conditions**
Batteries disconnected (TM 9-2350-311-20-1)

| Connector No. | Electrical Lead To: | Wire No. |
|---|---|---|
| 1 | Battery assembly-to-master relay | 81 |
| 2 | Aeration detector-to-coolant indicator | 352B |
| 3 | Aeration detector-to-coolant indicator | 352A |
| 4 | Glow plug controller-to-glow plug switch | 486A |
| 5 | Engine oil pressure transmitter-to-engine oil pressure gage switch | 36 |
| 6 | Engine coolant temperature transmitter-to-engine water temperature gage | 33A |
| 7 | Transmission oil temperature transmitter-to-transmission oil temperature gage | 324 |
| 8 | Transmission oil pressure transmitter-to-transmission oil pressure switch | 321 |
| 9 | High/low temperature and pressure switches/transmitters-to-master warning light | 509 |
| 10 | Air cleaner blower motor switch-to-air cleaner blower motor assembly | 415B-76B |
| 11 | Regulator cutoff relay coil energizer | 27B |
| 12 | Air cleaner blower motor circuit | 415 |
| 13 | Master switch voltage regulator lead | 400-459B |
| 14 | Engine starter circuit (starter relay bilge pump circuit breaker neutral safety switch) | 14/14B/GND |
| 15 | Voltage regulator-to-master relay lead | 2 |
| 16 | Ground wire | 4 |
| 17 | Engine bracket disconnect connector | |
| 18 | Voltage regulator ground | |
| 19 | Engine disconnect | |
| 20 | Voltage regulator connector | |
| 21 | Starter protection relay | 503 |
| 22 | Starter protection relay ground | |
| 23 | Driver's bulkhead connector-to-starter protection relay | 14C |
| 24 | Driver's bulkhead | |
| 25 | Driver's bulkhead | |
| 26 | Battery positive terminal | 81 |
| 27 | Master relay | 81 |

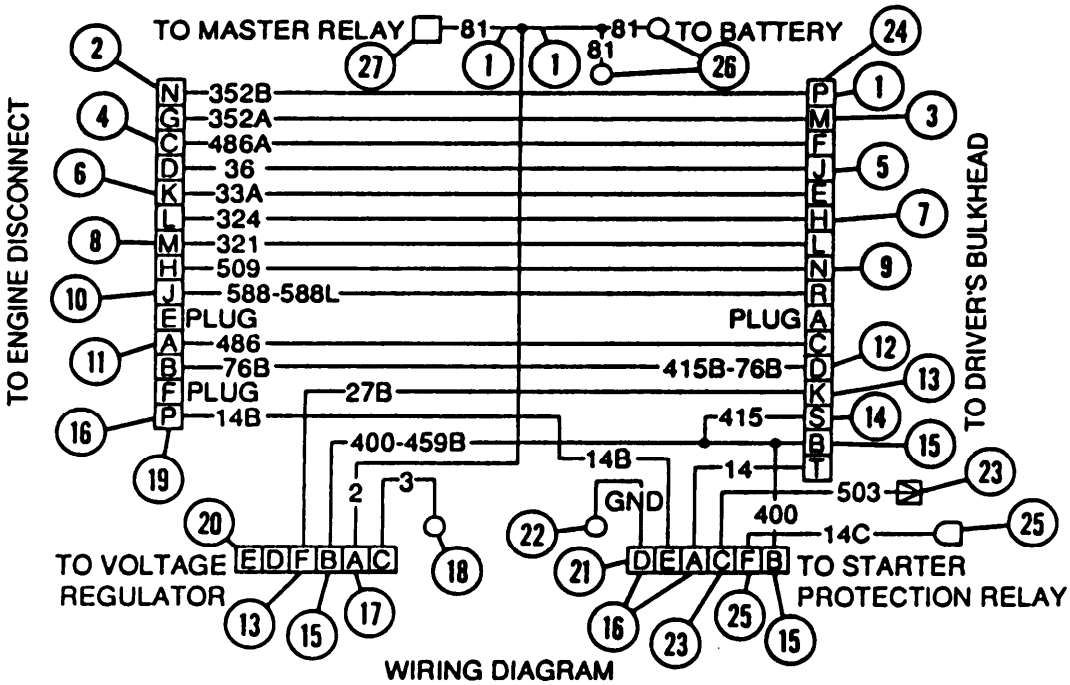


WIRING DIAGRAM

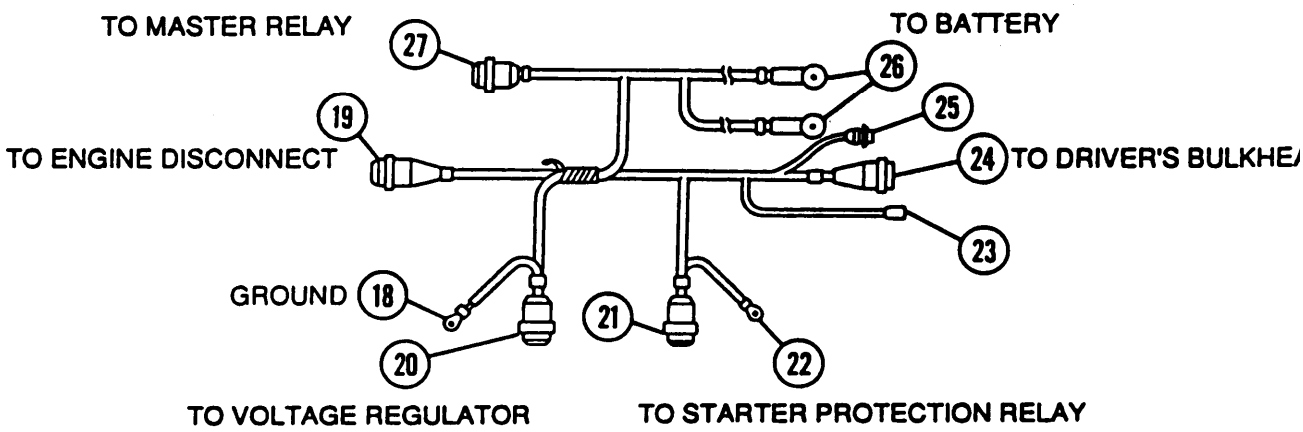

## 7-7 DRIVER'S BULKHEAD-TO-MASTER RELAY WIRING HARNESS (M109A4/M1O9A5) (ENGINE MODEL 7083-7391) – CONTINUED

**a. Removal**

1 Remove two screws (28), two lockwashers (29), two nuts (30), and two connectors (26) from batteries (31). Discard lockwashers.

2 Remove screw (32), washer (33), lockwasher (34), nut (35), and strap (36). Discard lockwasher.

3 Remove screw (37), lockwasher (38), washer (39), and two ground wires (18 and 22) from voltage regulator mount (40). Discard lockwasher.

4 Disconnect connector (23) at wire 503.

5 Disconnect two wiring harnesses (41) from driver's compartment side of bulkhead (42).

6 Remove eight nuts (43), eight lockwashers (44), eight washers (45), and eight screws (46). Remove two connectors (24 and 25) from bulkhead (42). Discard lockwashers.

7 Disconnect four electrical connectors (19, 20,21, and 27) and remove wiring harness.

**b. Disassembly**

1 Remove electrical tape only for sections being disassembled.

2 Separate/isolate wiring harness branches.

3 Disassemble wiring harness branches (TM 9-2350-311-20-1).

c. Assembly

1 Assemble wiring harness branches (TM 9-2350-311-20-1).

2 Apply electrical tape only for sections being assembled.

**d. Installation**

1 Install wiring harness and connect four electrical connectors (19, 20,21, and 27).

2 Install two connectors (24 and 25), eight screws (46), eight washers (45), eight new lockwashers (44), and eight nuts (43) to bulkhead (42).

3 Connect two wiring harnesses (41) to driver's compartment side of bulkhead (42).

4 Connect connector (23) at wire 503.

5 Install two ground wires (18 and 22), washer (39), new lockwasher (38), and screw (37) to voltage regulator mount (40).

6 Install strap (36), nut (35), new lockwasher (34), washer (33), and screw (32).

7 Install two connectors (26), two nuts (30), two new lockwashers (29), and two screws (28) to batteries (31).

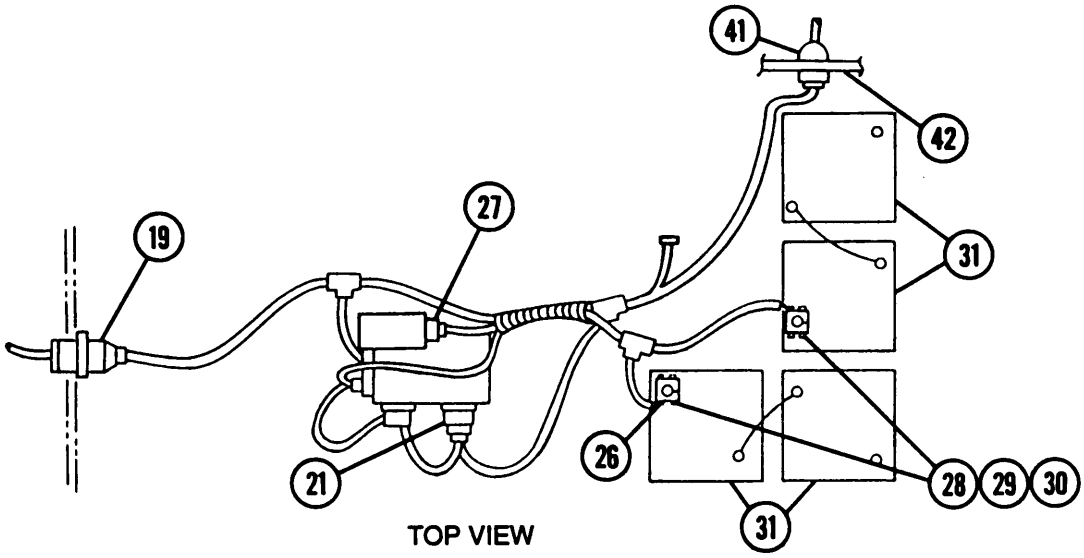


TOP VIEW

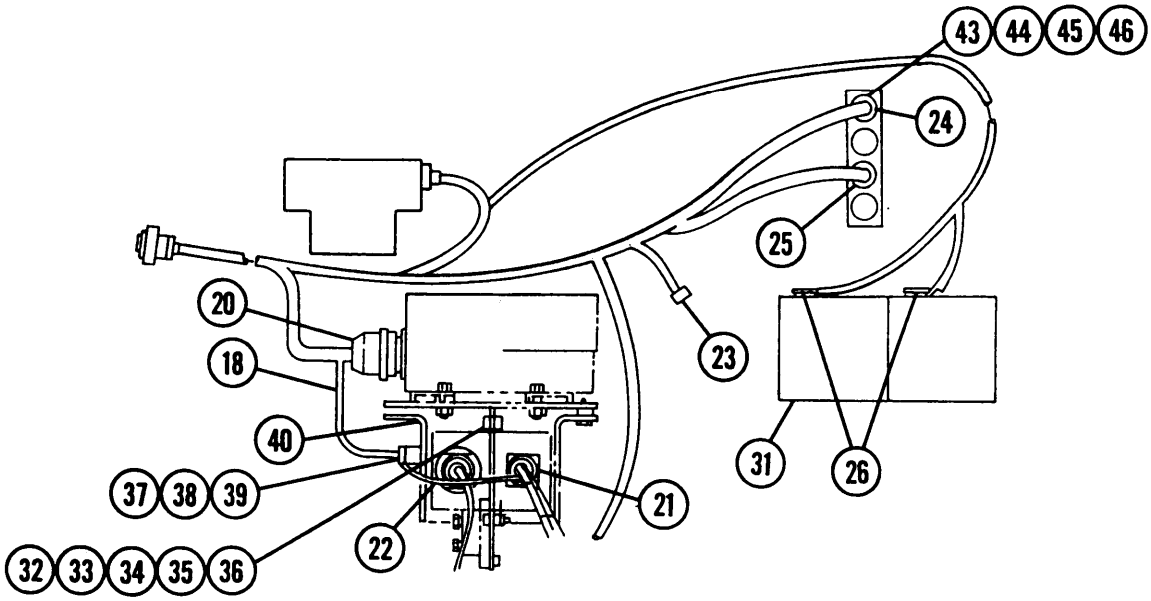


FRONT VIEW

**NOTE**

FOLLOW-ON MAINTENANCE: Connect batteries (TM 9-2350-311-20-1)

## 7-8 BULKHEAD-TO-HEADLIGHTS/BILGE PUMP WIRING HARNESS

This task covers: a. Removal b. Disassembly c. Assembly d. Installation

**INITIAL SETUP**

**Tools**
General mechanic's tool kit (item 14, Appx C)

**Materials/Parts**
Electrical tape — black (item 25, Appx B)

**References**
TM 9-2350-311-20-1

**Equipment Conditions**
Batteries disconnected (TM 9-2350-311-20-1)
Air intake grille opened and secured (TM 9-2350-311-20-1)
Engine exhaust grille and front slope plate removed (TM 9-2350-311-20-1)
Engine compartment access cover removed (TM 9-2350-311-20-1)

| Connector No. | Electrical Lead To: | Wire No. |
|---|---|---|
| 1 | Left fuel pump lead | 76 |
| 2 | Left fuel pump | GND |
| 3 | Right fuel pump | GND |
| 4 | Right fuel pump lead | 76 |
| 5 | Right upper and lower fuel tank | GND |
| 6 | Right upper fuel tank transmitter lead | 29 |
| 7 | Right lower fuel tank transmitter lead | 31 |
| 8 | Not Used | 515 |
| 9 | Not used | 514 |
| 10 | Blackout marker (front light assembly) | 20 |
| 11 | Service headlight low beam | 18 |
| 12 | Service headlight high beam | 17 |
| 13 | Bilge pump motor connector | 452 |
| 14 | Master relay connector | 459 |
| 15 | Bilge pump relay lead | 452 |
| 16 | Bilge pump relay energizing circuit | 450 |
| 17 | Bilge pump relay power lead | 452B |
| 18 | Bilge pump circuit breaker connector | 452B |
| 19 | Not used | 19 |
| 20 | Bilge pump relay connector | |
| 21 | Bulkhead connector | |
| 22 | Ground | |

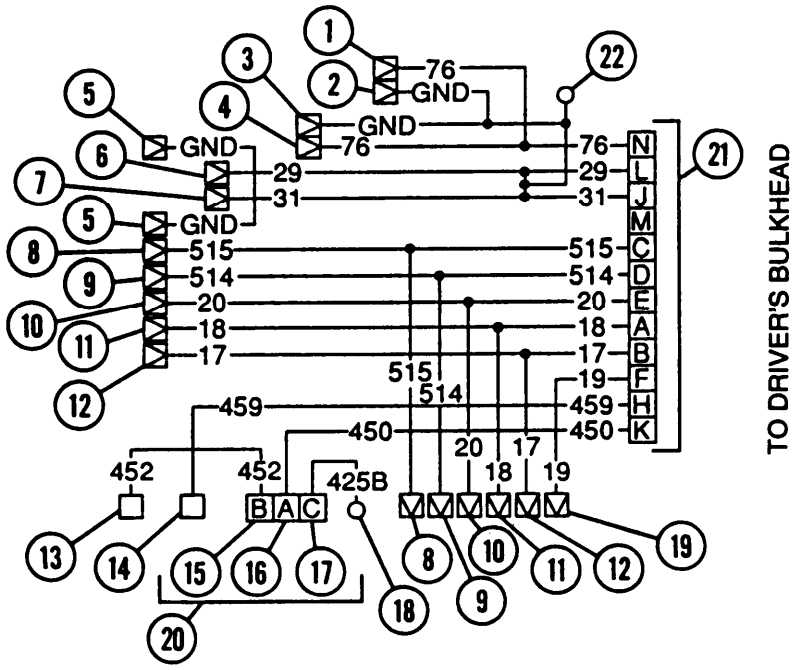


WIRING DIAGRAM

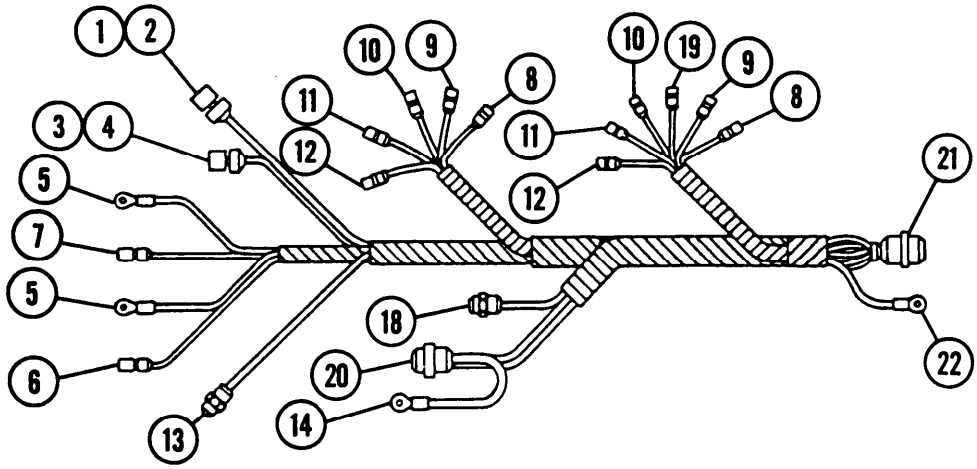

## 7-8 BULKHEAD-TO-HEADLIGHT/BBILGE PUMP WIRING HARNESS — CONTINUED

**a. Removal**

1 Remove two screws (23), two washers (24), two ground leads (5), and two snap-in connectors (6 and 7) from fuel level transmitters.

**NOTE**

Powerplant must be removed to disconnect fuel pump leads (TM 9-2350-311-20-1).

2 Remove four snap-in connectors (1 thru 4) from fuel pump.

3 Disconnect 11 quick disconnects (8, 9, 10, 11, 12, and 19) from left and right headlight assemblies.

4 Remove nut (25) and washer (26) from bilge pump circuit breaker and release connector wire (18).

5 Disconnect four electrical connectors (13, 14,20,and 21).

6 Remove screw (27) and washer (28) and release ground wire (22).

7 Remove 15 plastic retainers (29), 15 screws (30), and 15 washers (31) and release wiring harness.

8 Remove wiring harness.

**b. Disassembly**

1 Remove electrical tape only for sections being disassembled.

2 Separate/isolate wiring harness branches.

3 Disassemble wiring harness branches (TM 9-2350-311-20-1).

**c. Assembly**

1 Assemble wiring harness branches (TM 9-2350-311-20-1).

2 Apply electrical tape only for sections being assembled.

d. Installation

1 Install wiring harness.

2 Install 15 washers (31), 15 screws (30), and 15 plastic retainers (33) to wiring harness.

3 Install ground wire (22), washer (28), and screw (27).

4 Connect four electrical connectors (13, 14,20,and 21).

5 Install connector wire (18), washer (26), and nut (25) to bilge pump circuit breaker.

6 Connect 11 quick disconnects (8, 9, 10, 11, 12, and 19) to left and right headlight assemblies.

7 Install four snap-in connectors (1 thru 4) to electric fuel pumps.

**NOTE**

Powerplant must be removed to connect fuel pump leads (TM 9-2350-311-20-1).

8 Install two snap-in connectors (6 and 7), two guard leads (5), two washers (24), and two screws (23) to fuel level transmitters.

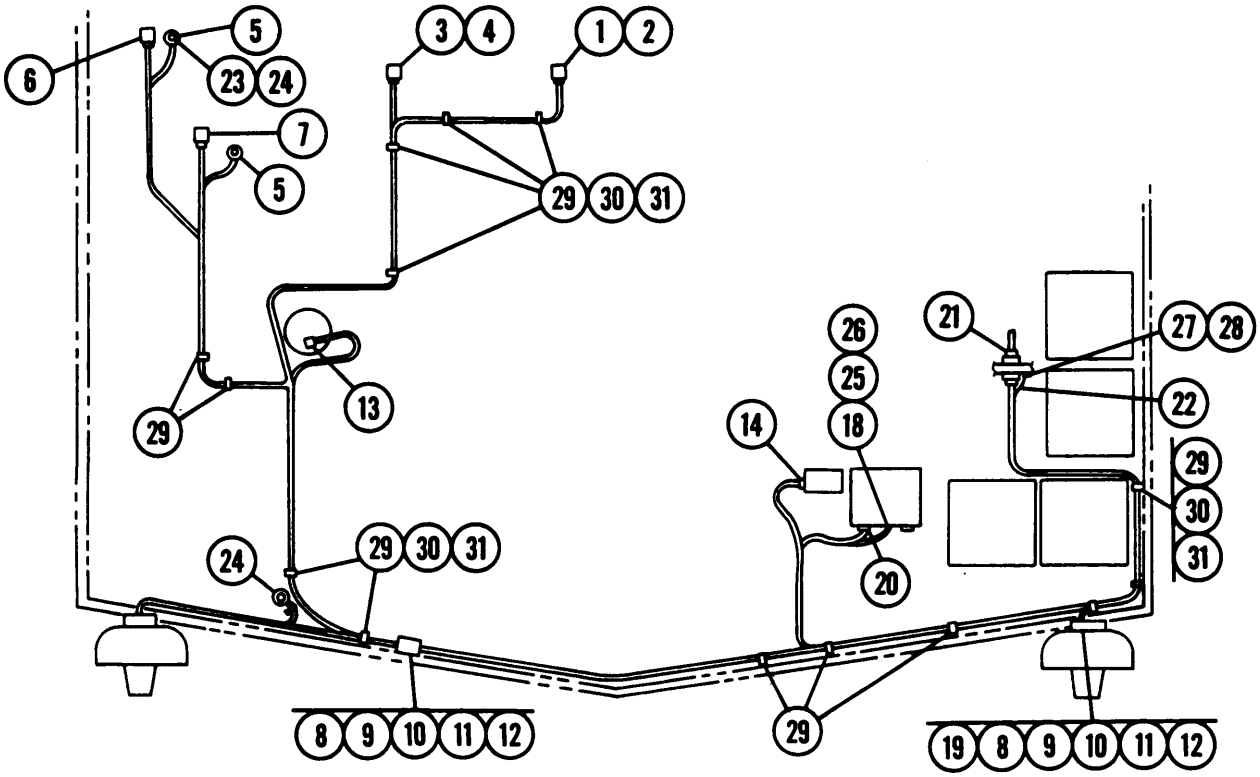


**NOTE**

FOLLOW-ON MAINTENANCE: Install engine compartment access cover (TM 9-2350-311-20-1)
Install engine exhaust grille and front slope plate (TM 9-2350-311-20-1)
Close air intake grille (TM 9-2350-311-20-1)
Connect batteries (TM 9-2350-311-20-1)

## 7-9 BULKHEAD-TO-PORTABLE INSTRUMENT PANEL WIRING HARNESS (ENGINE MODEL 7083-7396)

Thiss task covers: a. Removal b. Disassembly c. Assembly d. Installation

### INITIAL SETUP

**Tools**
General mechanic's tool kit (item 14, Appx C)

**Materials/Parts**
Electrical tape — black (item 25, Appx B)

**References**
TM 9-2350-311-20-1

**Equipment Conditions**
Batteries disconnected (TM 9-2350-311-20-1)
Portable instrument panel removed (TM 9-2350-311-20-1)

| Connector No. | Electrical Lead To: | Wire No. |
|---|---|---|
| 1 | Aeration detector | 352B |
| 2 | Aeration detector | 352A |
| 3 | Master switch | 459B |
| 4 | Engine oil pressure gage | 36 |
| 5 | Engine water temperature gage | 33A |
| 6 | Transmission oil temperature gage | 324 |
| 7 | Transmission oil pressure gage | 321 |
| 8 | Warning lamp switch | 509 |
| 9 | Panel lights | 40 |
| 10 | Fuel level gage and switch | 29-31 |
| 11 | Engine instrument and master warning light | 27 |
| 12 | Master switch | 459A |
| 13 | Master switch | 459 |
| 14 | Ground | GND |
| 15 | Parking brake warning switch and light | 509E |
| 16 | Parking brake warning light | 509E |
| 17 | In-tank fuel pump and generator system relay | 76B |
| 18 | Starter switch — neutral safety switch | 14 |
| 19 | Flame heater electrical lead | 486A |
| 20 | Connector to 415 air cleaner blower motor relay | 27B |
| 21 | Accessory control box | 400 |
| 22 | Flame heater electrical lead | 486 |
| 23 | Not used | 415 |
| 24 | Not used | 588 |
| 25 | Not used | 588L |
| 26 | Not used | 588-588L |
| 27 | Voltage regulator | 400-459B |
| 28 | Bulkhead connector | |
| 29 | Portable instrument connector | |

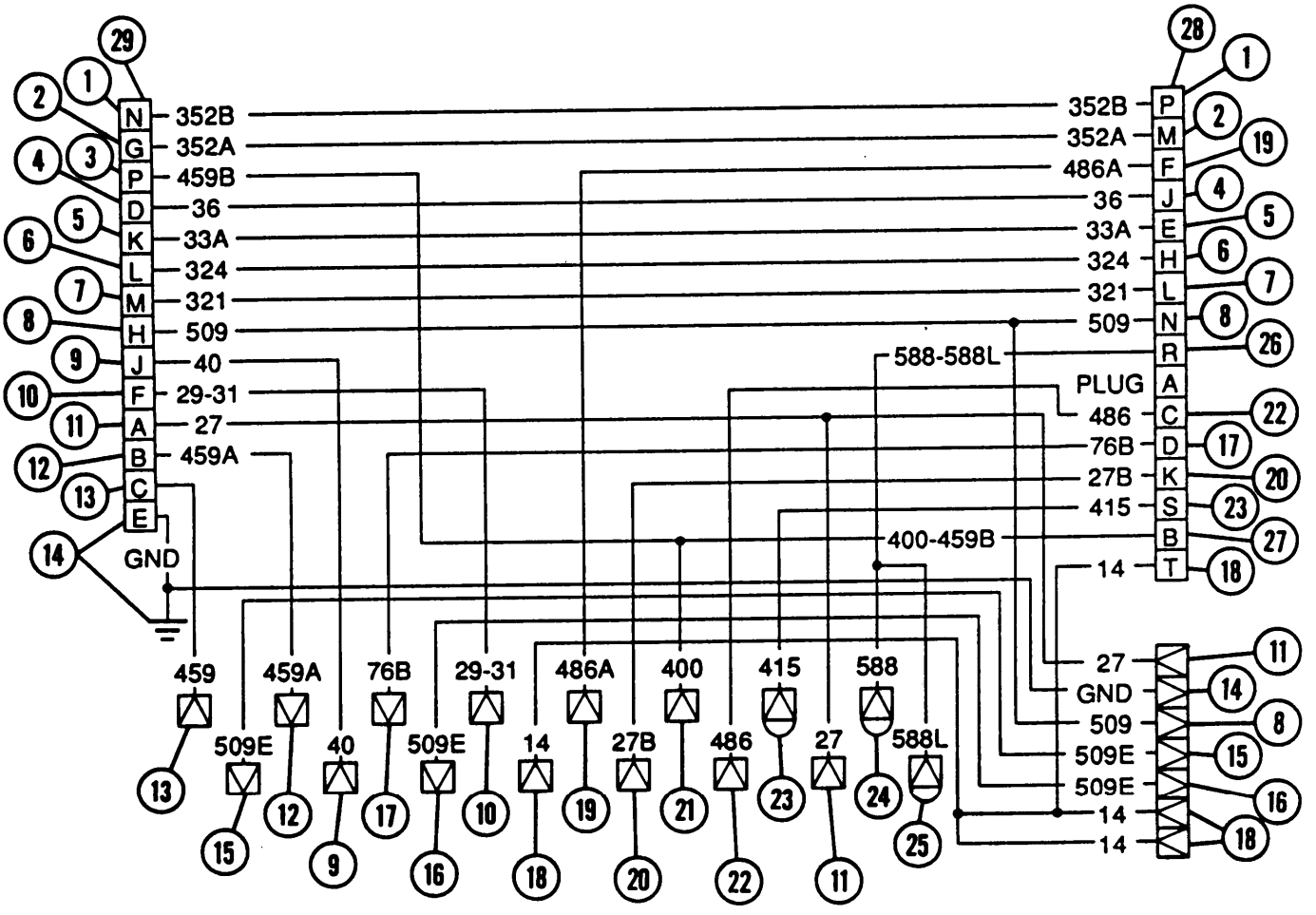


WIRING DIAGRAM

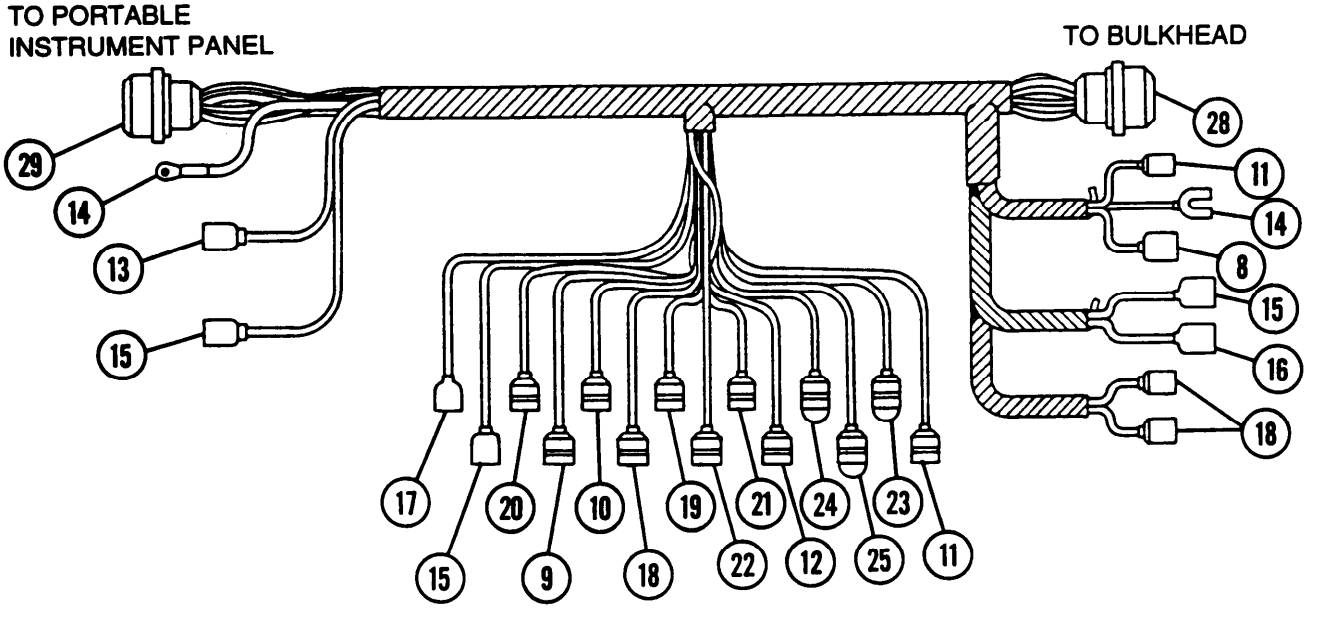

## 7-9 BULKHEAD-TO-PORTABLE INSTRUMENT PANEL WIRING HARNESS (ENGINE MODEL 7083-7398) – CONTINUED

### a. Removal

1 Remove screw (30), nut (31), screw (32), and washer (33) to release plastic strap (34) and ground wire (14).

2 Disconnect two connectors (28 and 29).

3 Disconnect connector (13) from bulkhead-to-driver's instrument panel wiring harness, connector (15) from parking brake light, and connector (16) at wiring harness 12268104 between circuit breakers (35) and driver's instrument panel (36).

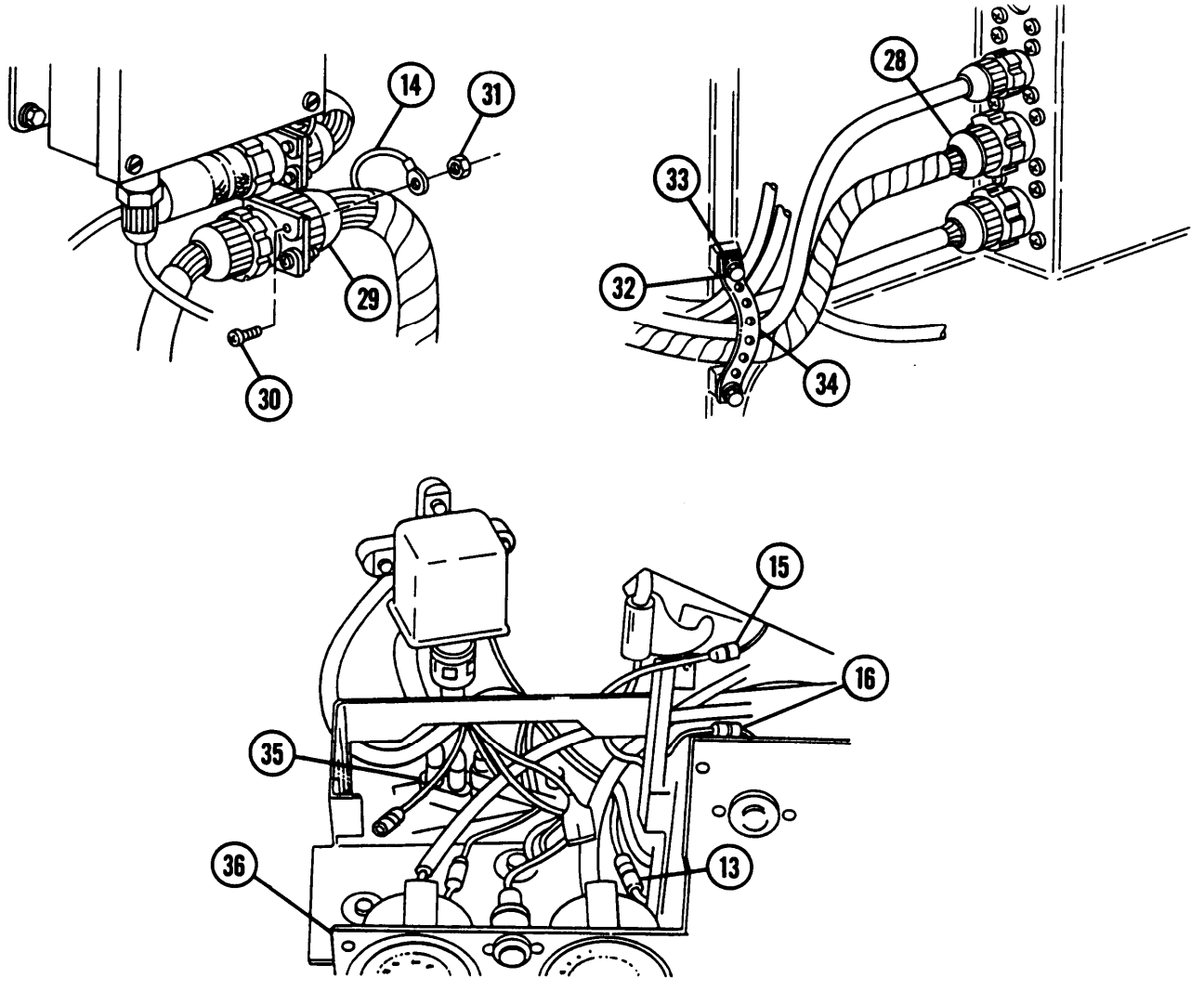

4 Disconnect connector (11), connector ground (14), and connector (8) at master warning light (37) near driver's steering column (38).

5 Disconnect two connectors (15 and 16) from parking brake warning switch (39) at brake assembly (40).

6 Disconnect two connectors (18) (two wires 14) at neutral safety switch (41).

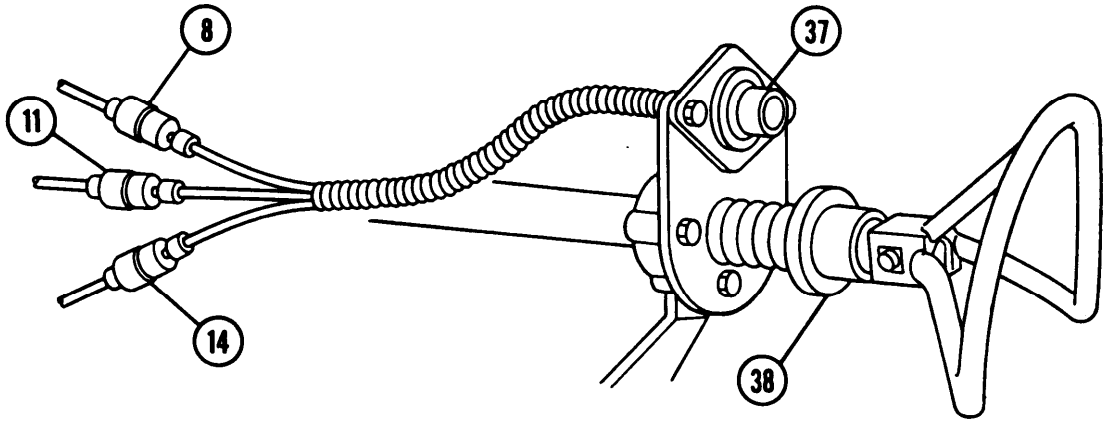


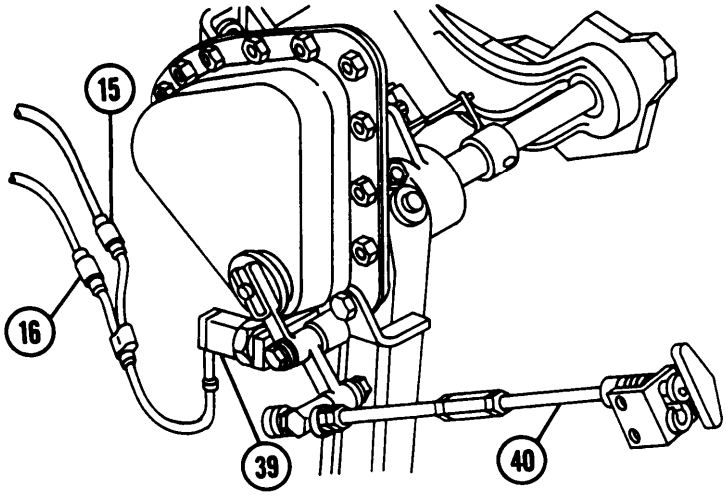


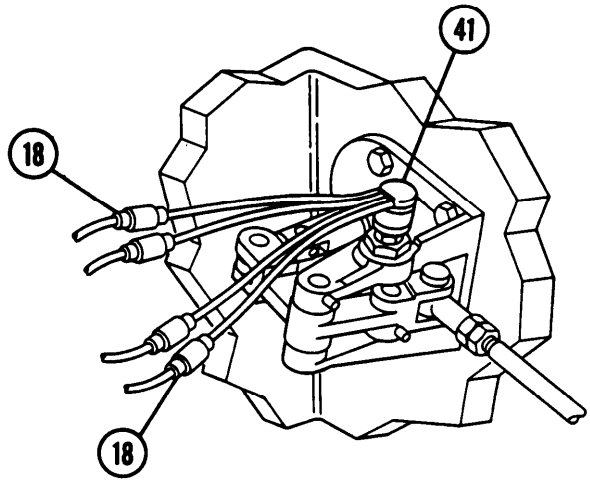

## 7-9 BULKHEAD-TO-PORTABLE INSTRUMENT PANEL WIRING HARNESS (ENGINE MODEL 7083-7396) – CONTINUED

### a. Removal — Continued

7 Disconnect connector (11) at circuit breaker (42).

**NOTE**

Connector 18 is a branch of the diode wiring harness assembly on M109A4/M109A5 Howitzers.

8 Disconnect connector (12) from driver's instrument panel wiring harness (43).

9 Disconnect three connectors (10, 15, and 18) at driver's instrument panel (36). Connector (18) will be removed from diode assembly on M109A4/M109A5 Howitzers.

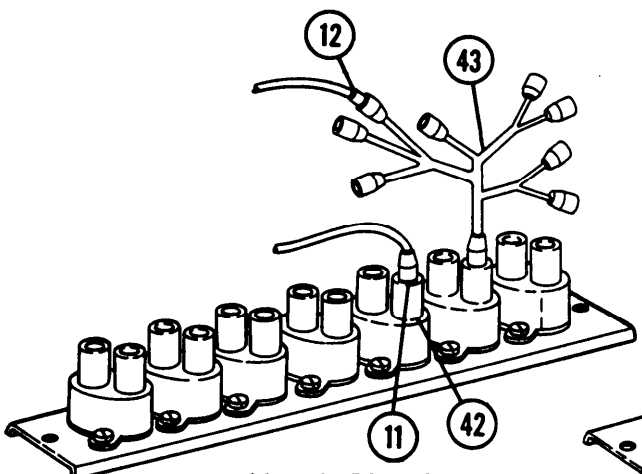


M109A2/M109A3

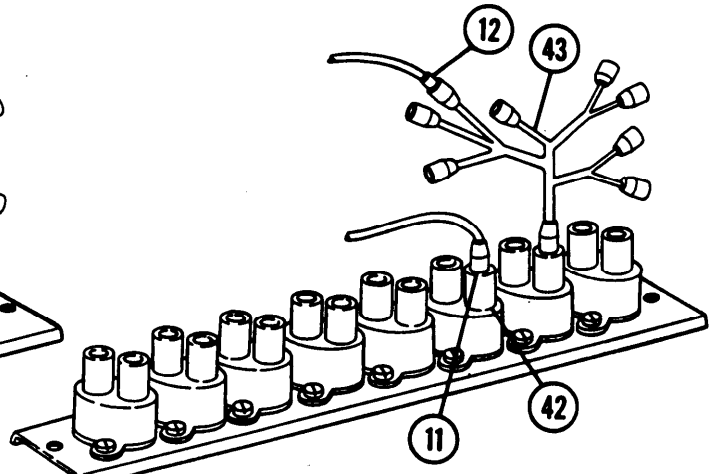


M109A4/M109A5

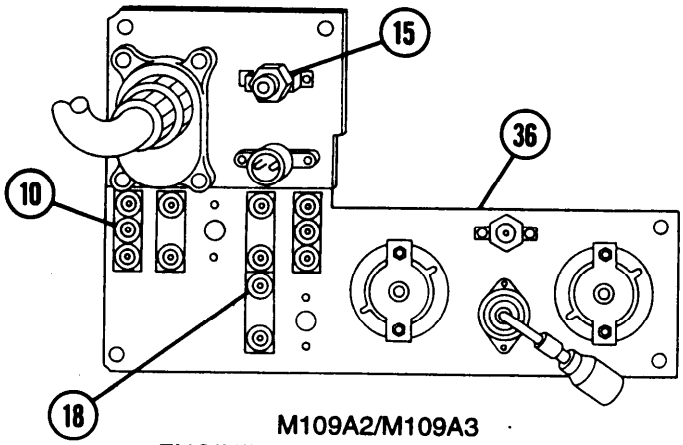


M109A2/M109A3
ENGINE MODEL 7083-7396 SHOWN

10 Disconnect connector (9) from “Y” connector (44) and disconnect connector (21 ) from accessory control box-to-heater/blower wiring harness (45).

11 Disconnect connector (17) from in-tank fuel pump lead assembly and disconnect connector (20) from 'Y“ connector-to-in-tank fuel pump lead assembly.

12 Disconnect two connectors (19 and 22) from flame heater electrical lead (46).

**b. Disassembly**

1 Remove electrical tape only for sections being disassembled.

2 Separate/isolate wiring harness branches.

3 Disassemble wiring harness branches (TM 9-2350-311-20-1).

c. **Assembly**

1 Assemble wiring harness branches (TM 9-2350-311-20-1).

2 Apply electrical tape only for sections being assembled.

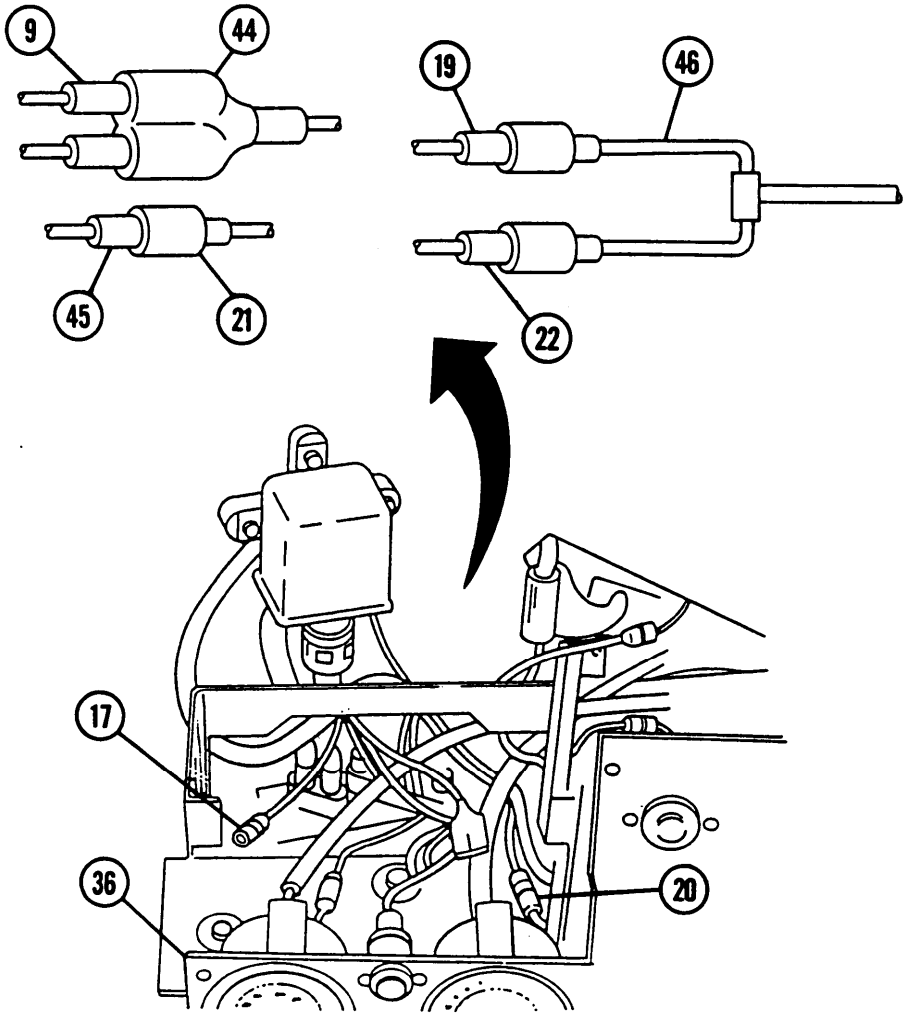

## 7-9 BULKHEAD-TO-PORTABLE INSTRUMENT PANEL WIRING HARNESS (ENGINE MODEL 7083-7396) – CONTINUED

**d. Installation**

1 Connect two connectors (19 and 22) at flame heater electrical lead (46).

2 Connect connector (17) at in-tank fuel pump lead assembly and connect connector (20) to “Y” connector-to-in-tank fuel pump lead assembly.

3 Connect connector (9) to “Y” connector (44) and connect connector (21) to accessory control box-to-heater/blower wiring harness (45).

4 Connect two connectors (15 and 16) to parking brake warning switch (39) at brake assembly (40).

5 Connect connector (11), connector ground (14), and connector (8) to master warning light (37) near driver’s steering column (38).

6 Connect connector (13) to bulkhead at driver’s instrument panel wiring harness, connector (15) to parking brake light, and connector (16) to wiring harness between driver’s instrument panel (36) and circuit breakers (35).

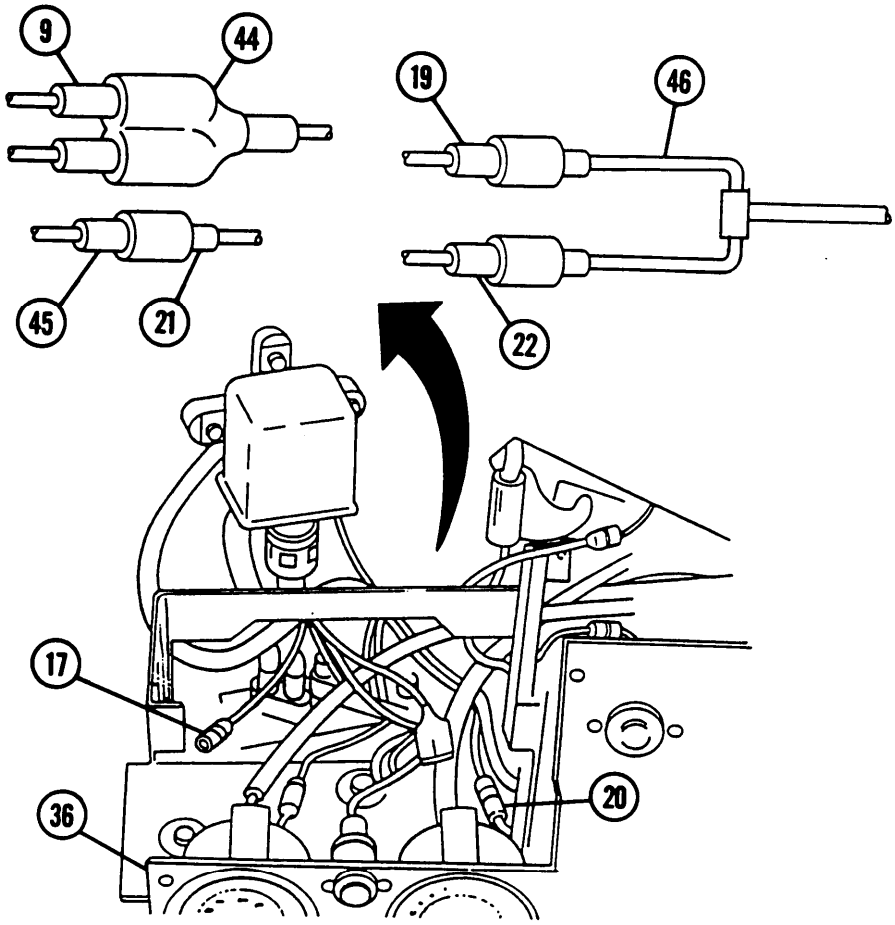

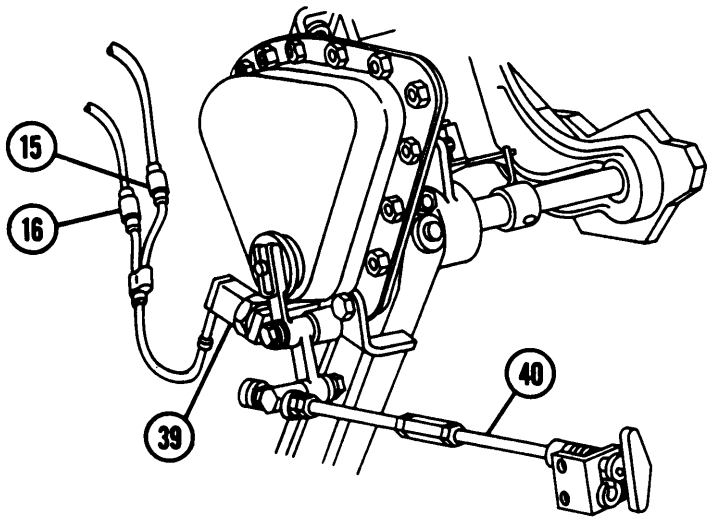
15
16
39
40

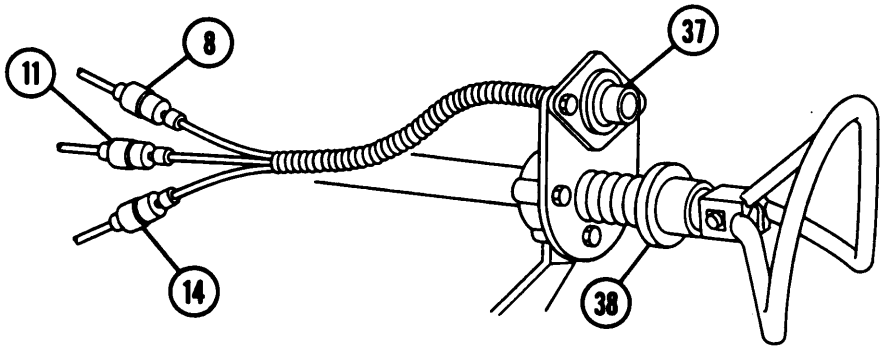
11
8
37
14
38

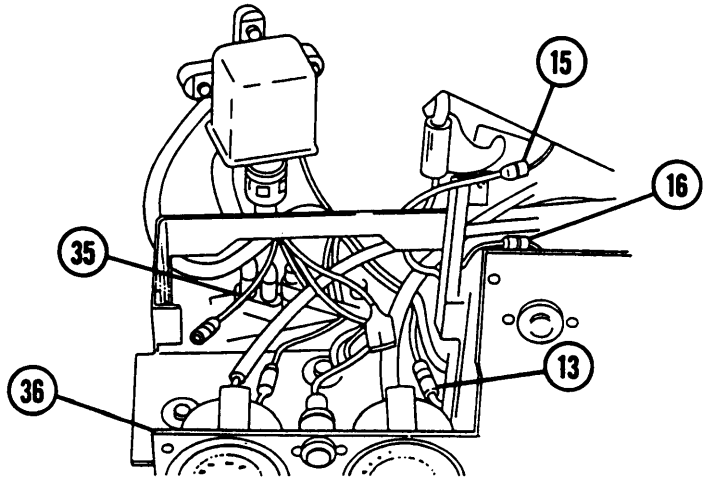
15
16
35
13
36

## 7-9 BULKHEAD-TO-PORTABLE INSTRUMENT PANEL WIRING HARNESS (ENGINE MODEL 7083-7398) – CONTINUED

**d. Installation —** Continued

**NOTE**

Connector 18 is a branch of the diode wiring harness assembly on M109A4/M109A5 Howitzers.

7 Connect three connectors (10, 15, and 18) to driver's instrument panel (36). Connector (18) will be connected to diode assembly on M109A4/M109A5 Howitzers.

8 Connect connector (12) to driver's instrument panel wiring harness (43).

9 Connect connector (11) to circuit breaker (42).

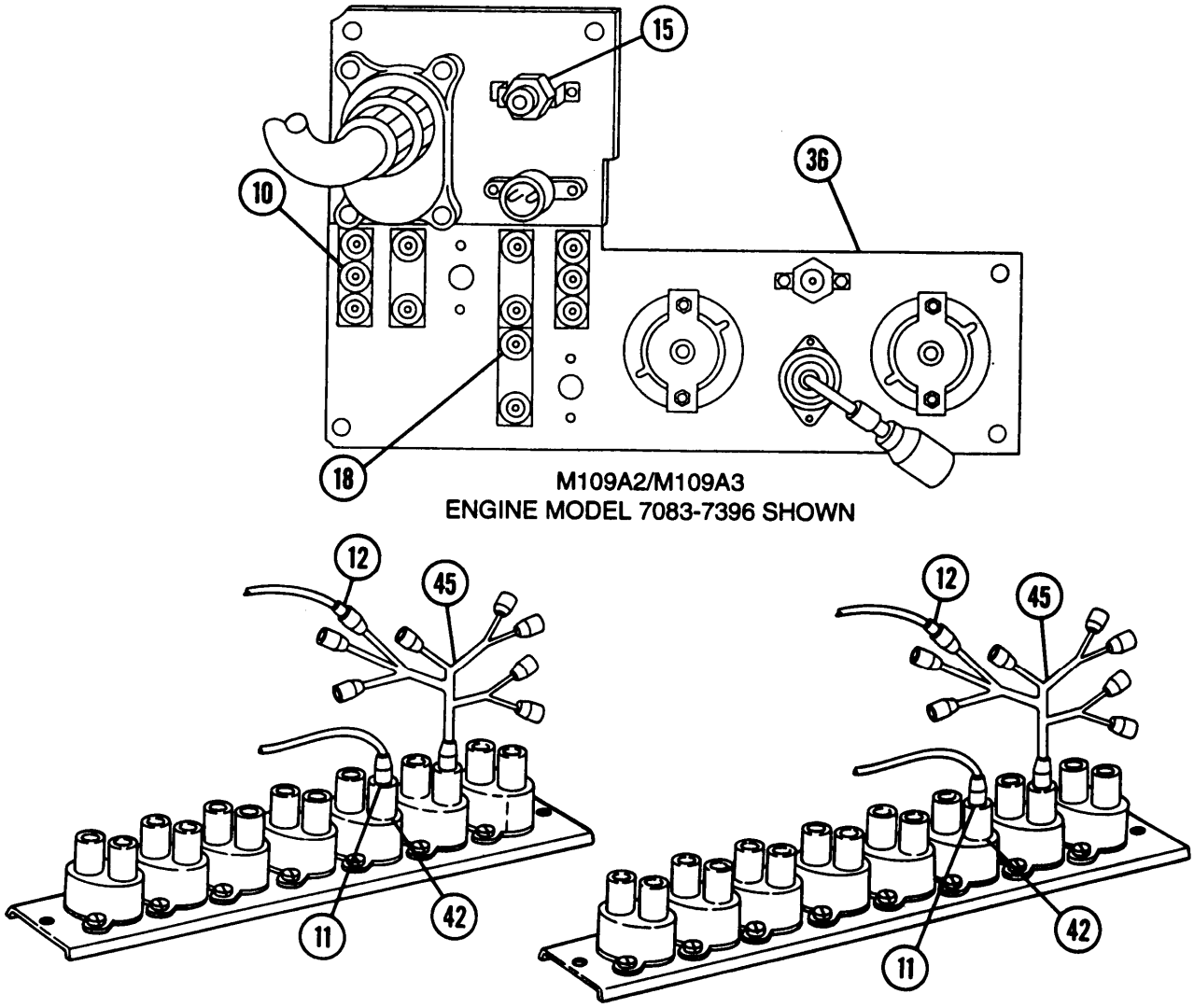


M109A2/M109A3
ENGINE MODEL 7083-7396 SHOWN

10 Connect two connectors (18) (two wires 14) to neutral safety switch (41).

11 Connect connectors (28 and 29).

12 Install ground wire (14), plastic strap (34), nut (31), screw (30), washer (33), and screw (32).

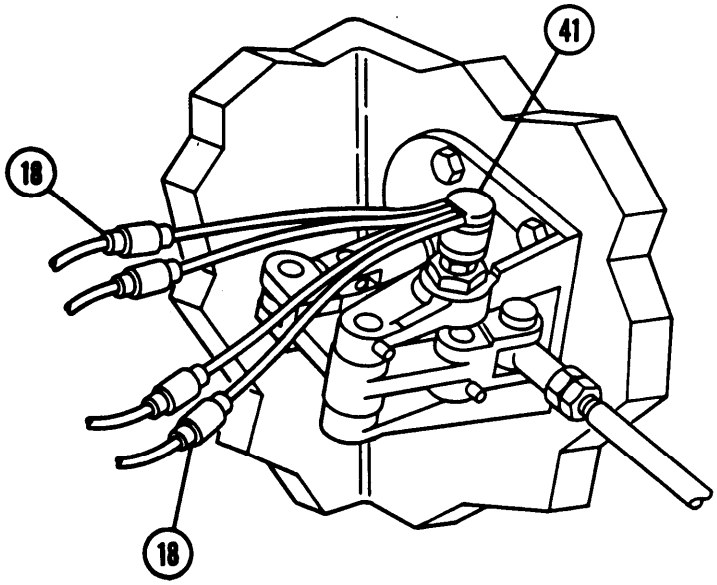


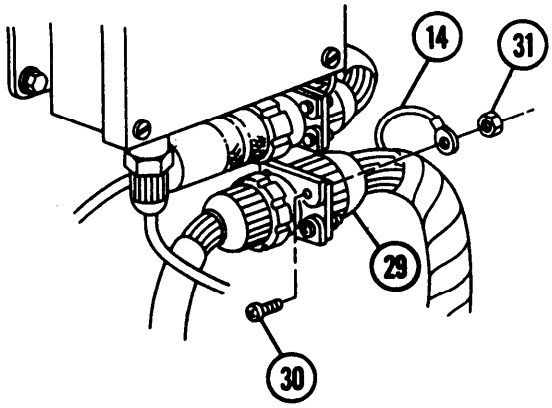


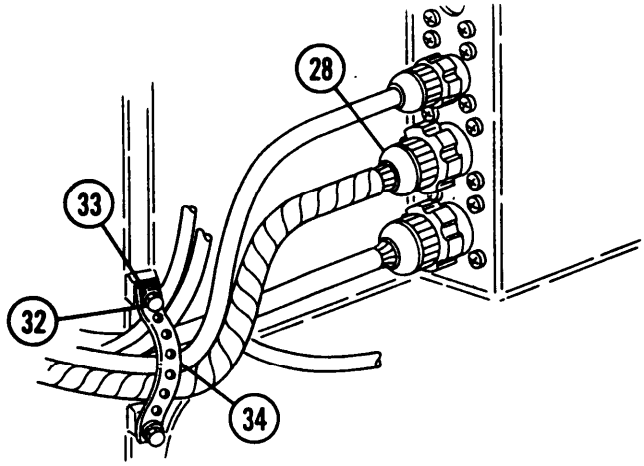


**NOTE**

FOLLOW-ON MAINTENANCE: Install portable instrument panel (TM 9-2350-311-20-1)
Connect batteries (TM 9-2350-311-20-1)

## 7-10 BULKHEAD-TO-PORTABLE INSTRUMENT PANEL WIRING HARNESS (ENGINE MODEL 7083-7391)

This task covers: a. Removal b. Disassembly c. Assembly d. Installation

**INITIAL SETUP**

**Tools**
General mechanic's tool kit (item 14, Appx C)

**Materials/Parts**
Electrical tape — black (item 25, Appx B)

**References**
TM 9-2350-311-20-1

**Equipment Conditions**
Batteries disconnected (TM 9-2350-311-20-1)
Portable instrument panel removed (TM 9-2350-311-20-1)

| Connector No. | Electrical Lead To: | Wire No. |
|---|---|---|
| 1 | Aeration detector | 352B |
| 2 | Aeration detector | 352A |
| 3 | Master switch | 459B |
| 4 | Engine oil pressure gage | 36 |
| 5 | Engine water temperature gage | 33A |
| 6 | Transmission oil temperature gage | 324 |
| 7 | Transmission oil pressure gage | 321 |
| 8 | Warning lamp switch | 509 |
| 9 | Panel lights | 40 |
| 10 | Fuel level gage and switch | 29-31 |
| 11 | Engine instrument and master warning light | 27 |
| 12 | Master switch | 459A |
| 13 | Master switch | 459 |
| 14 | Ground | GND |
| 15 | Parking brake warning switch and light | 509E |
| 16 | Parking brake warning light | 509E |
| 17 | In-tank fuel pump and generator system relay | 76B |
| 18 | Starter switch — neutral safety switch | 14 |
| 19 | Glow plug switch | 486A |
| 20 | Connector to 415 air cleaner blower motor relay | 27B |
| 21 | Accessory control box | 400 |
| 22 | Glow plug lamp lead | 486 |
| 23 | Not used | 415 |
| 24 | Not used | 588 |
| 25 | Not used | 588L |
| 26 | Not used | 588-588L |
| 27 | Voltage regulator | 400-459B |
| 28 | Bulkhead connector | |
| 29 | Portable instrument connector | |

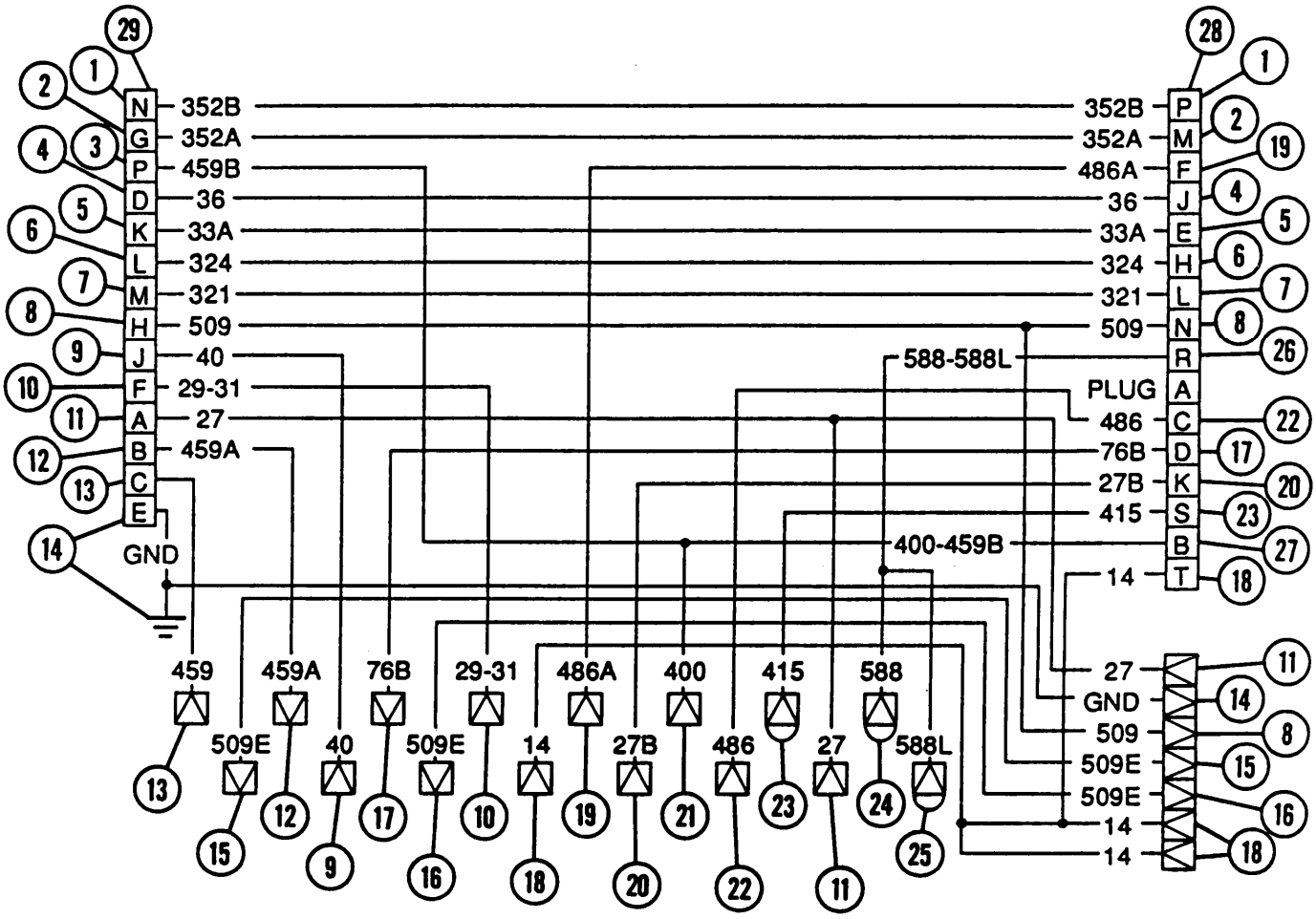


WIRING DIAGRAM

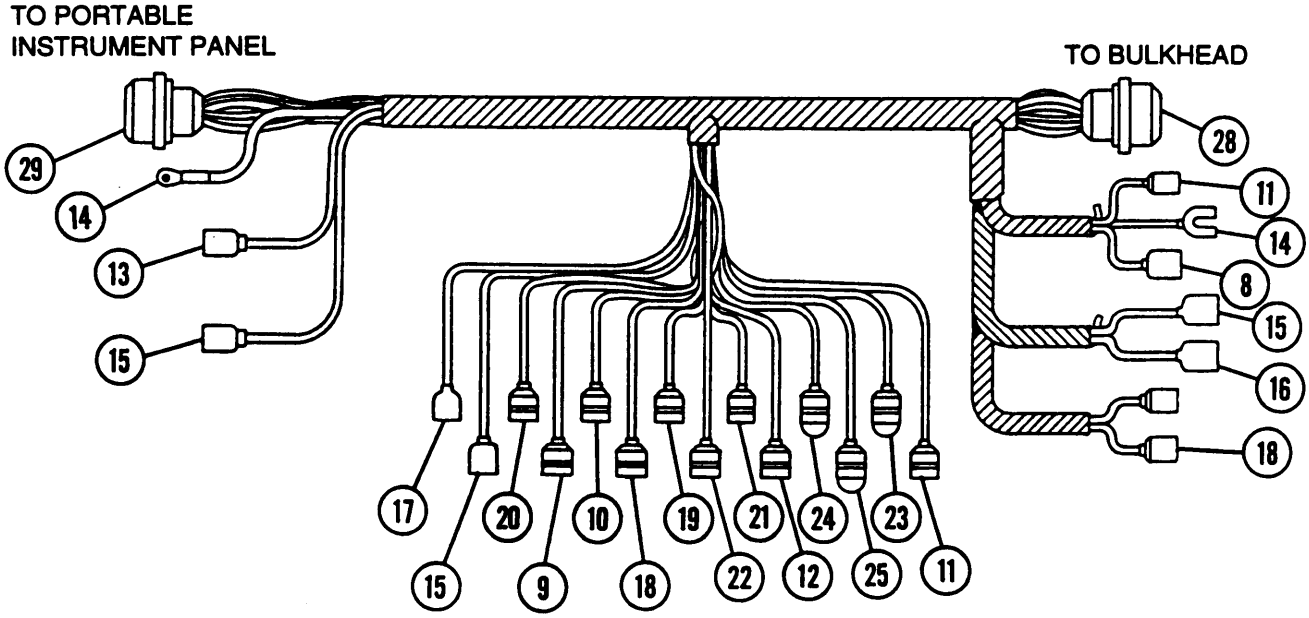

## 7-10 BULKHEAD-TO-PORTABLE INSTRUMENT PANEL WIRING HARNESS (ENGINE MODEL 7083-7391) – CONTINUED

### a. Removal

1 Remove screw (30), washer (31), screw (32), and washer (33) to release plastic strap (34) and ground wire (14).

2 Disconnect two connectors (28 and 29).

3 Disconnect connector (13) from bulkhead at driver's instrument panel wiring harness, connector (15) from parking brake light, and connector (16) at wiring harness 12268104 between circuit breakers (35) and driver's instrument panel (36).

4 Disconnect connector (11), connector ground (14), and connector (8) from master warning light (37) near driver's steering column (38).

5 Disconnect two connectors (15 and 16) from parking brake warning switch (39) at brake assembly (40).

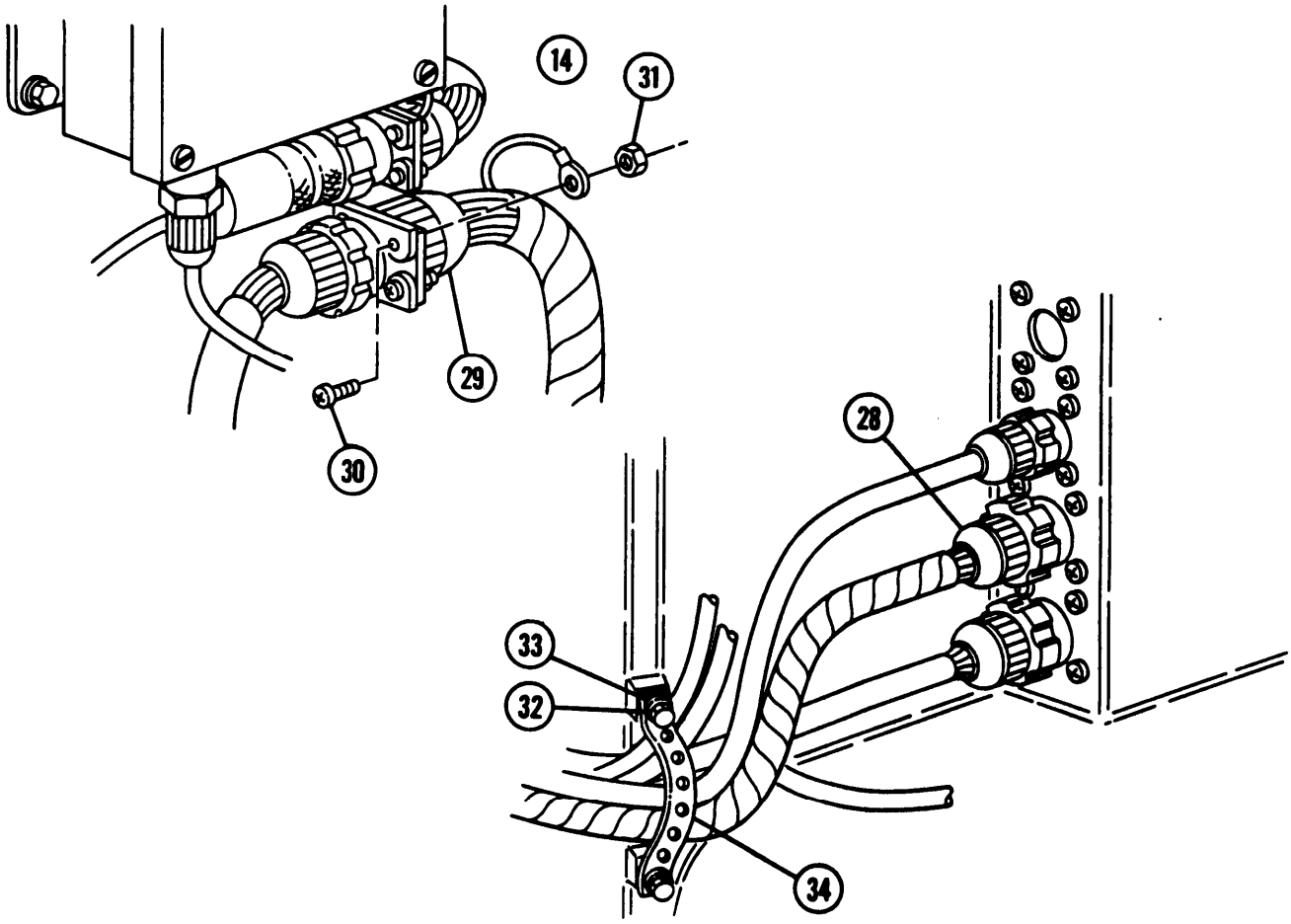

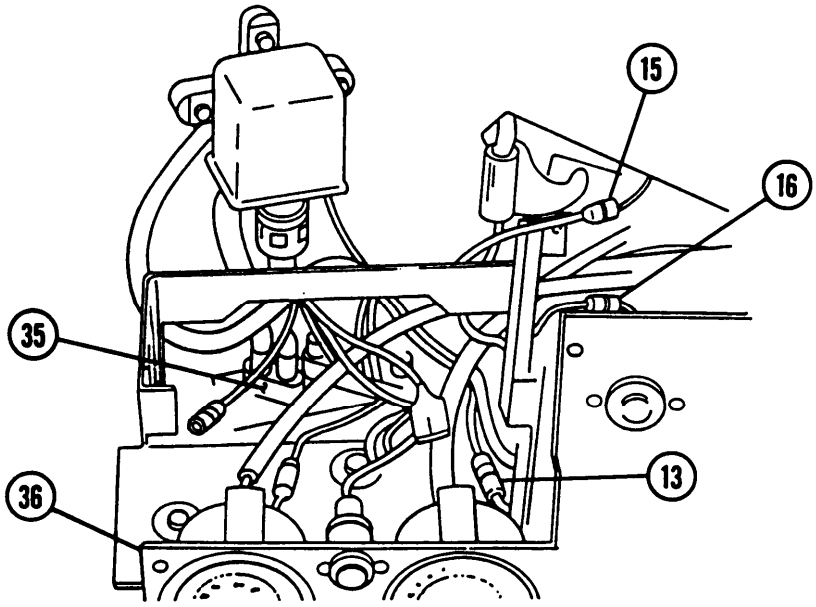
15
16
35
13
36

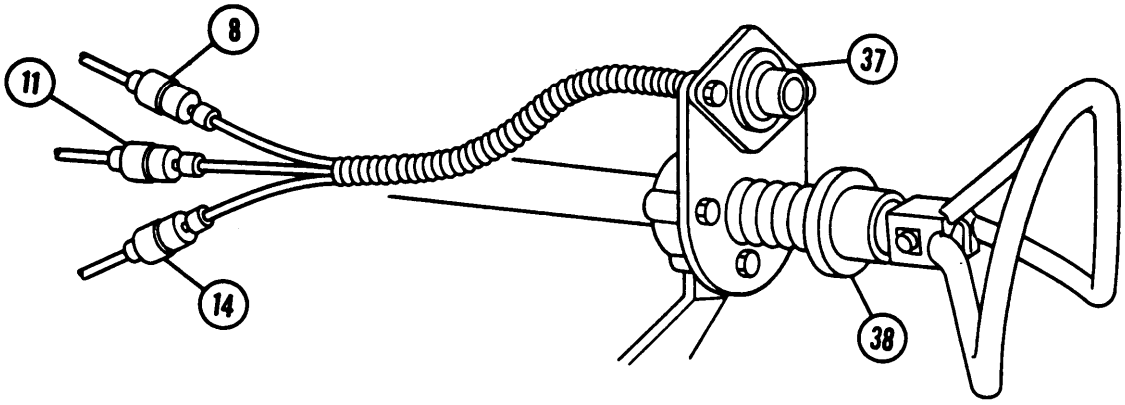
8
11
37
14
38

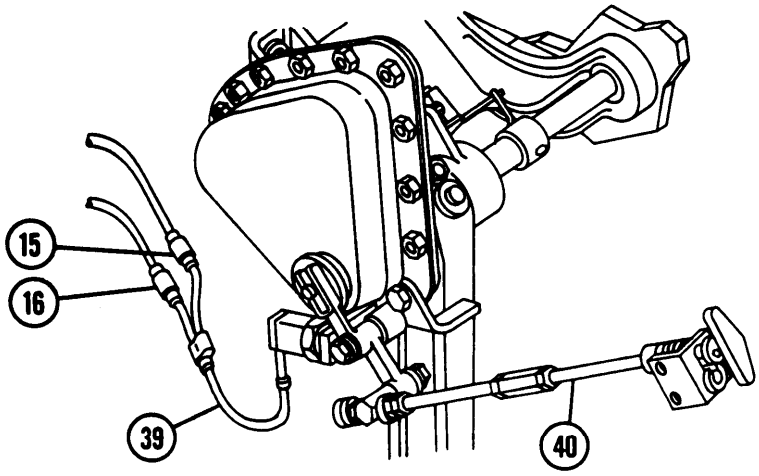
15
16
39
40

## 7-10 BULKHEAD-TO-PORTABLE INSTRUMENT PANEL WIRING HARNESS (ENGINE MODEL 7083-7391) – CONTINUED

**a. Removal—Continued**

6 Disconnect two connectors (18) (two wires 14) at neutral safety switch (41).

7 Disconnect connector (11) at circuit breaker (42).

8 Disconnect connector (12) from driver's instrument panel wiring harness (43).

**NOTE**

Connector 18 is a branch of the diode wiring harness assembly on M109A4/M109A5 Howitzers.

9 Disconnect four connectors (10,15, 18, and 19) from driver's instrument panel (36). Connector (18) will be removed from diode wiring harness assembly on M109A4/M109A5 Howitzers.

10 Disconnect connector (22) from lead (44).

11 Disconnect connector (9) from "Y" connector (45) and disconnect connector (21) from accessory control box-to-heater/blower wiring harness (46).

12 Disconnect connector (17) from in-tank fuel pump lead assembly and disconnect connector (20) from "Y" connector to in-tank fuel pump lead assembly.

**b. Disassembly**

1 Remove electrical tape only for sections being disassembled.

2 Separate/isolate wiring harness branches.

3 Disassemble wiring harness branches (TM 9-2350-311-20-1).

**c. Assembly**

1 Assemble wiring harness branches (TM 9-2350-311-20-1).

2 Apply electrical tape only for sections being assembled.

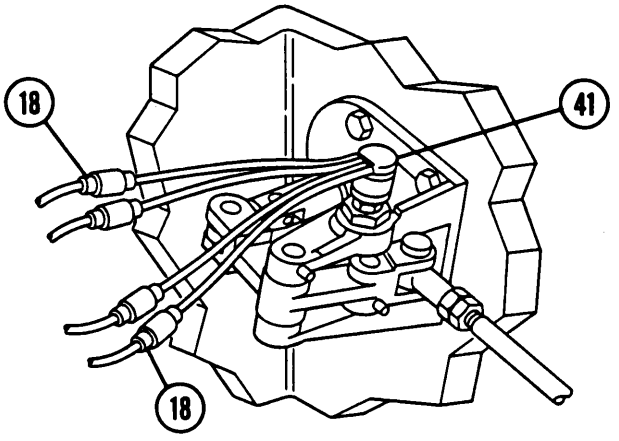


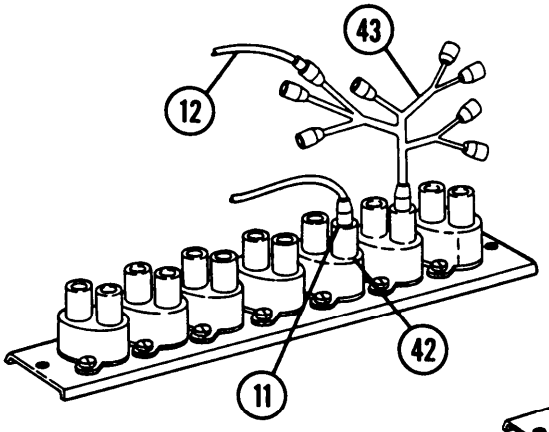


M109A2/M109A3

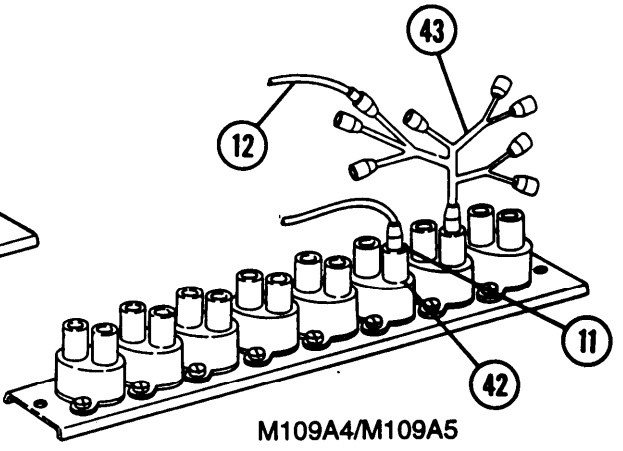


M109A4/M109A5

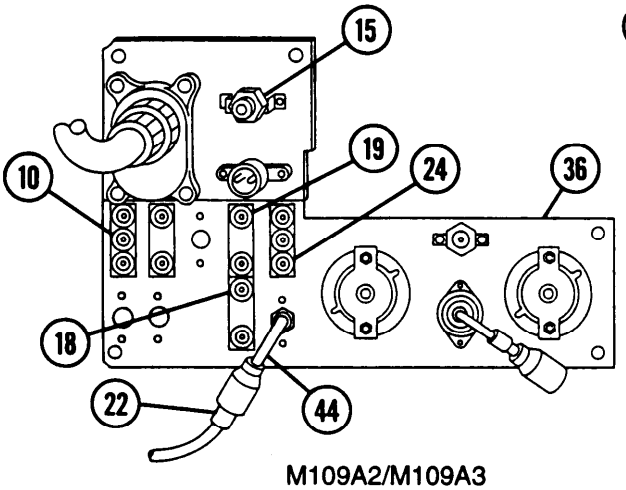


M109A2/M109A3
ENGINE MODEL 7083-7391 SHOWN

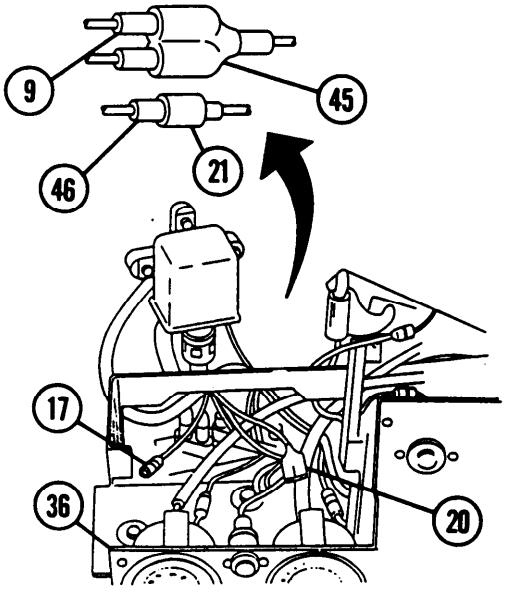

## 7-10 BULKHEAD-TO-PORTABLE INSTRUMENT PANEL WIRING HARNESS (ENGINE MODEL 7083-7391) – CONTINUED

**d. Installation**

1 Connect connector (17) to in-tank fuel pump lead assembly and connect connector (20) to “Y” connector at in-tank fuel pump lead assembly.

2 Connect connector (9) to “Y” connector (45) and connect connector (21) to accessory control box-to-heater/ blower wiring harness (46).

3 Connect two connectors (15 and 16) to parking brake warning switch (39) at brake assembly (40).

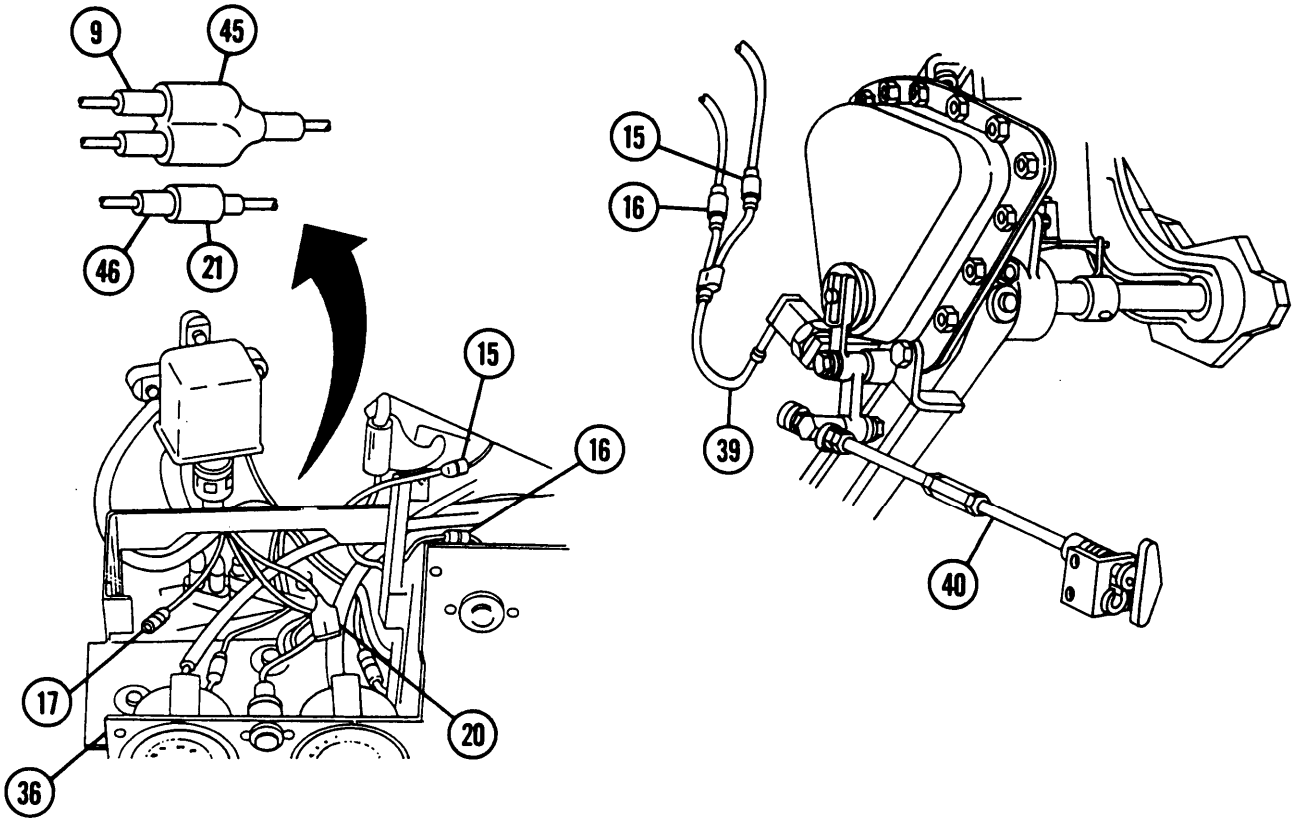

4 Connect connector (11), connector ground (14), and connector (8) to master warning light (37) near driver's steering column (38).

5 Connect connector (13) at bulkhead-to-driver's instrument panel wiring harness, connector (15) at parking brake light, and connector (16) to wiring harness between circuit breakers (35) and driver's instrument panel (36).

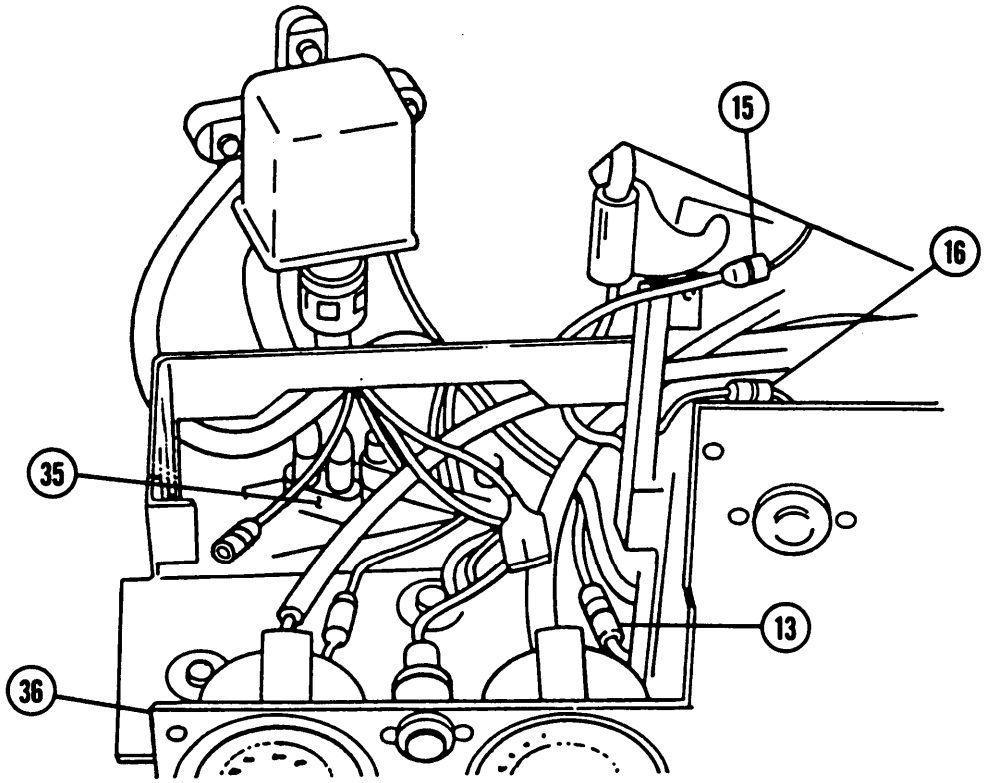


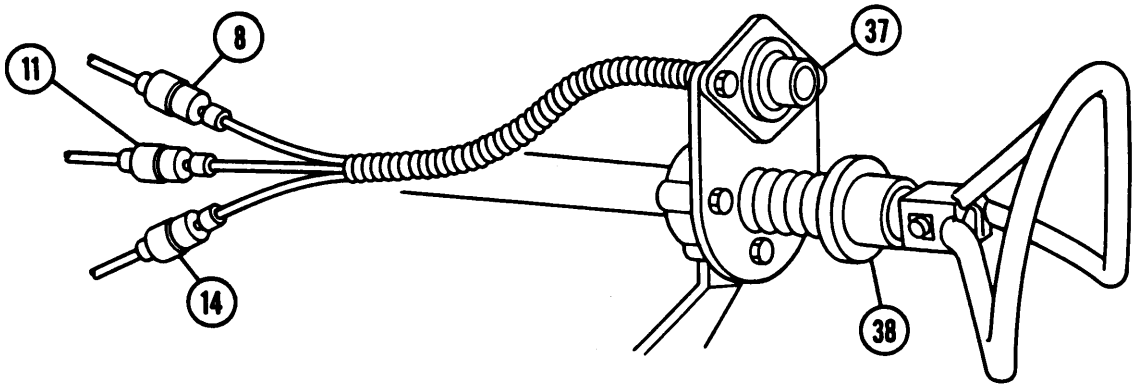

## 7-10 BULKHEAD-TO-PORTABLE INSTRUMENT PANEL WIRING HARNESS (ENGINE MODEL 7083-7391) – CONTINUED

**d. Installation — Continued**

**NOTE**

Connector 18 is a branch of the diode wiring harness assembly on M109A4/M109A5 Howitzers.

6 Connect four connectors (10, 15, 18, and 19) to driver's instrument panel. Connector (18) will be connected to diode wiring harness assembly on M109A4/M109A5 Howitzers.

7 Connect connector (22) to lead (44).

8 Connect connector (12) to driver'ts instrument panel wiring harness (43).

9 Connect connector (11) to circuit breaker (42).

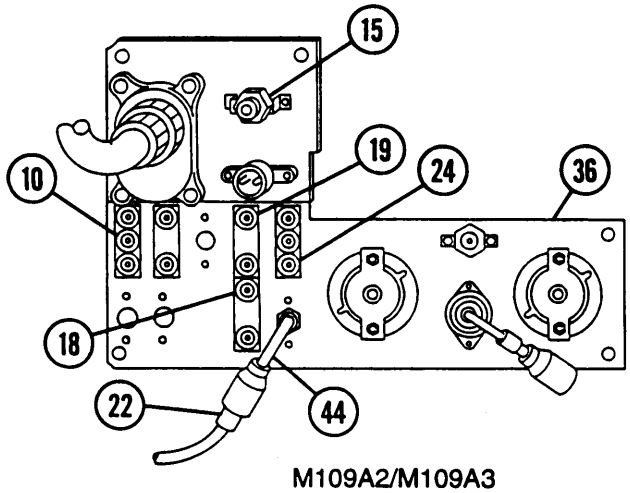


M109A2/M109A3
ENGINE MODEL 7083-7391 SHOWN

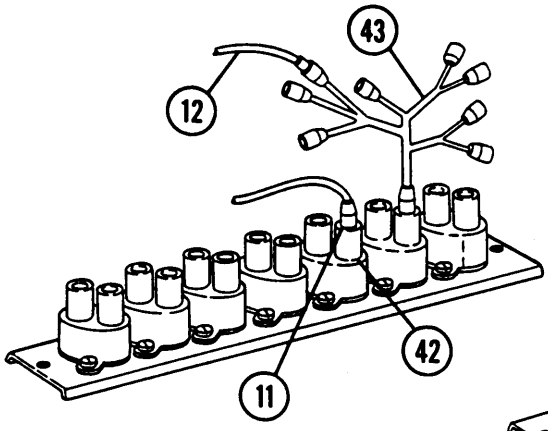


M109A2/M109A3

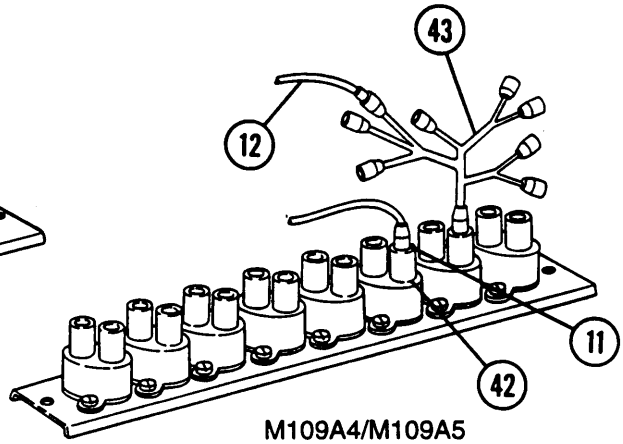


M109A4/M109A5

10 Connect four connectors (18) (two wires 14, one wire 415A, and one wire 415B).

11 Connect connectors (28 and 29).

12 Install ground wire (14), plastic strap (34), nut (31), screw (30), washer (33), and screw (32).

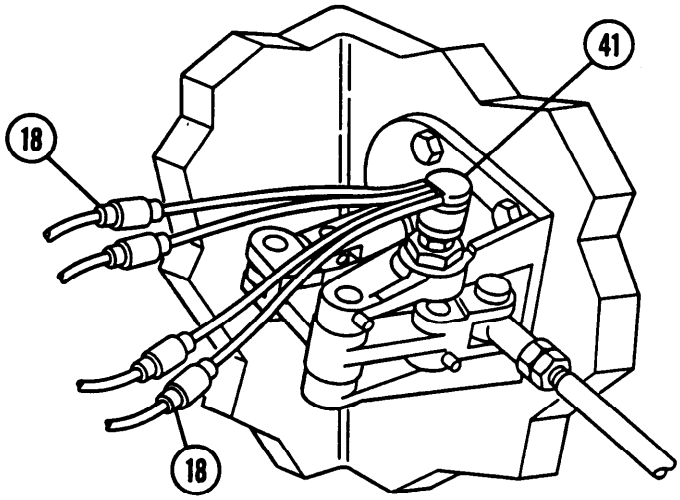


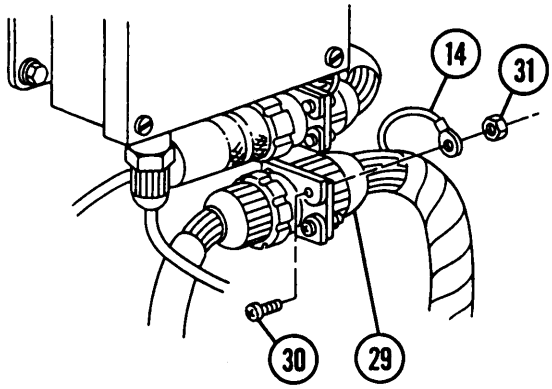


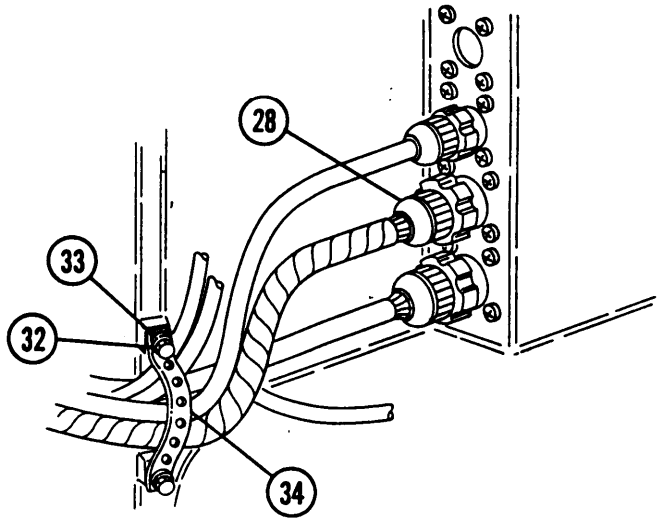


**NOTE**

FOLLOW-ON MAINTENANCE: Install portable instrument panel (TM 9-2350-311-20-1)
Connect batteries (TM 9-2350-311-20-1)

## 7-11 BULKHEAD-TO-DRIVER'S INSTRUMENT PANEL WIRING HARNESS

This task covers: a. Removal b. Disassembly c. Assembly d. Installation

**INITIAL SETUP**

**Tools**
General mechanic's tool kit (item 14, Appx C)

**Materials/Parts**
Electrical tape — black (item 25, Appx B)
Lockwashers (2) (item 37, Appx F)

**References**
TM 9-2350-311-20-1

**Equipment Conditions**
Batteries disconnected (TM 9-2350-311-20-1)
Portable instrument panel removed (TM 9-2350-311-20-1)

| Connector No. | Electrical Lead To: | Wire No. |
|---|---|---|
| 1 | Service headlight dimmer switch — low beam | 18 |
| 2 | Service headlight dimmer switch — high beam | 17 |
| 3 | Service B.O. IR headlight — low beam | 515 |
| 4 | Service B.O. IR headlight — high beam | 514 |
| 5 | Not used | |
| 6 | Master switch circuit | 459 |
| 7 | B.O. marker light — front | 20 |
| 8 | Fuel level switch — right lower tank | 31 |
| 9 | Bilge pump switch — energizing circuit | 450 |
| 10 | Fuel level switch — right upper tank | 29 |
| 11 | Fuel prime switch | 76 |
| 12 | Stop light switch — light switch | 75 |
| 13 | Light switch — dimmer switch | 16 |
| 14 | Main light switch power lead | 15 |
| 15 | Main light switch — panel lights | 40 |
| 16 | Main light switch — B.O. marker rear | 24 |
| 17 | Main light switch — B.O. stop light | 23 |
| 18 | Main light switch — service stop light | 22 |
| 19 | Main light switch — service taillight | 21 |
| 20 | High beam indicator light | 519 |
| 21 | Not used | |
| 22 | Light circuits | 20-24 |
| 23 | Driver's dome light, auxiliary outlet, and trailer receptacle | 37-38 |
| 24 | Auxiliary outlet and trailer receptacle | 37 |
| 25 | Not used | |
| 26 | Driver's dome light | 38 |
| 27 | Connector dimmer switch | |
| 28 | Connector dimmer switch | |
| 29 | Connector lighting switch | |
| 30 | Master warning switch | 459L |

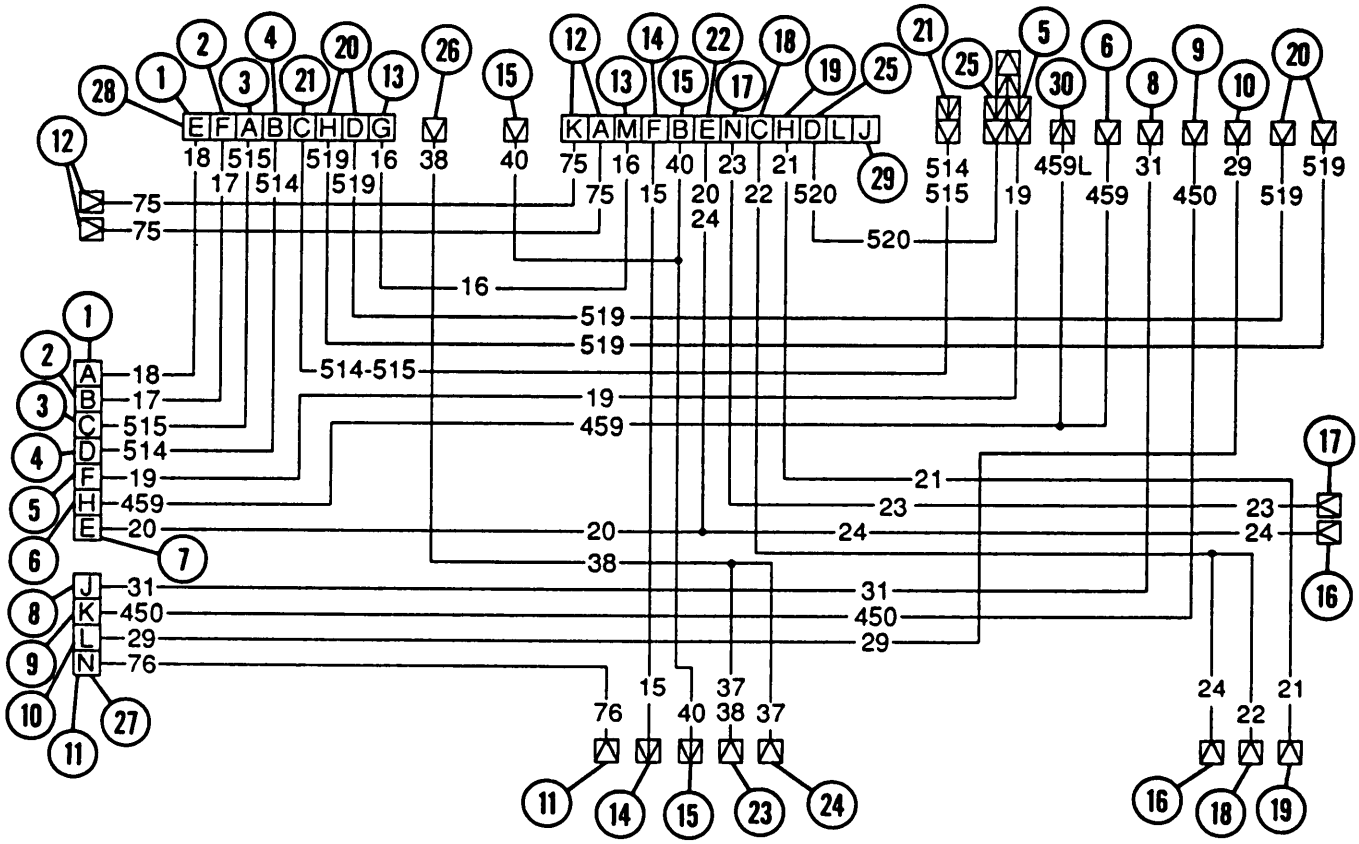


WIRING DIAGRAM

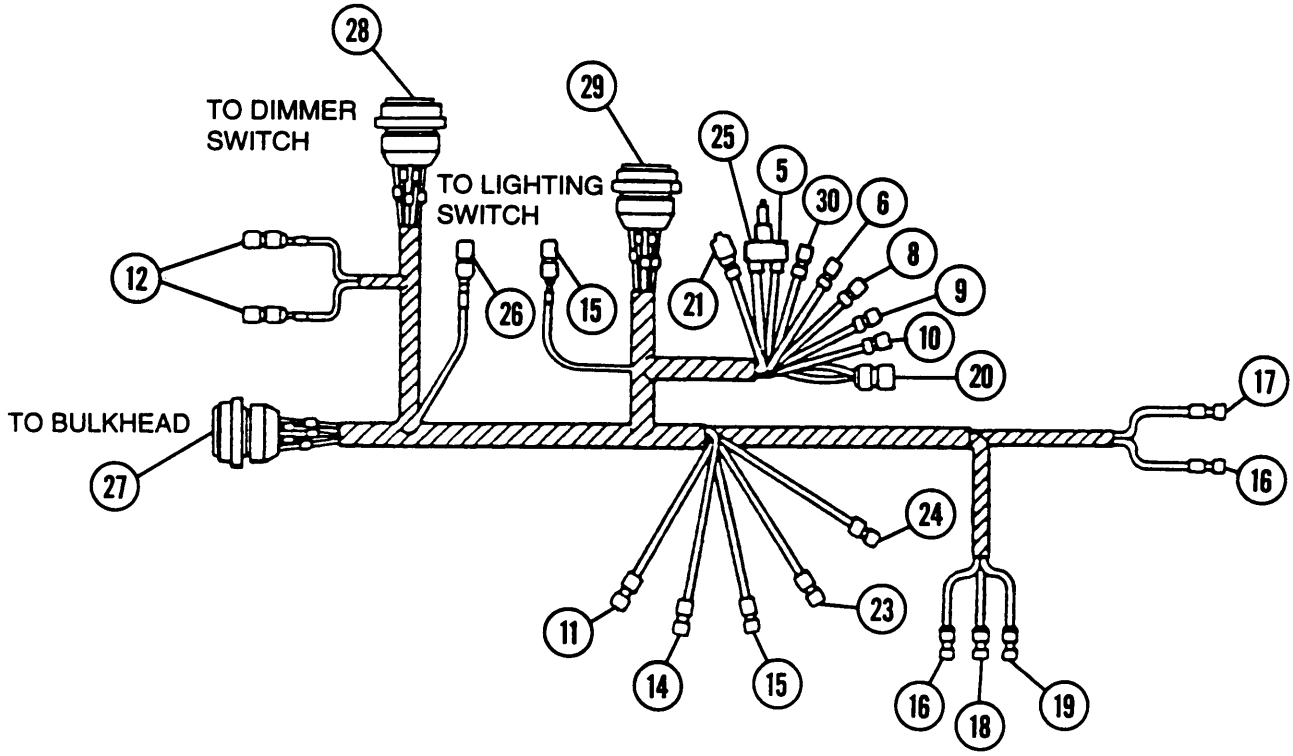

## 7-11 BULKHEAD-TO-DRIVER'S INSTRUMENT PANEL WIRING HARNESS — CONTINUED

### a Removal

1 Disconnect two connectors (12 and 28) from brake pedal assembly (31).

2 Disconnect connector (27) from bulkhead (32).

3 Disconnect connector (26), strap (33), nut (34), and washer (35) from driver's dome light (36).

**NOTE**

Connectors are located in well below driver's instrument panel and circuit breakers.

4 Disconnect connector (6).

5 Disconnect connector (14).

6 Disconnect connector (15).

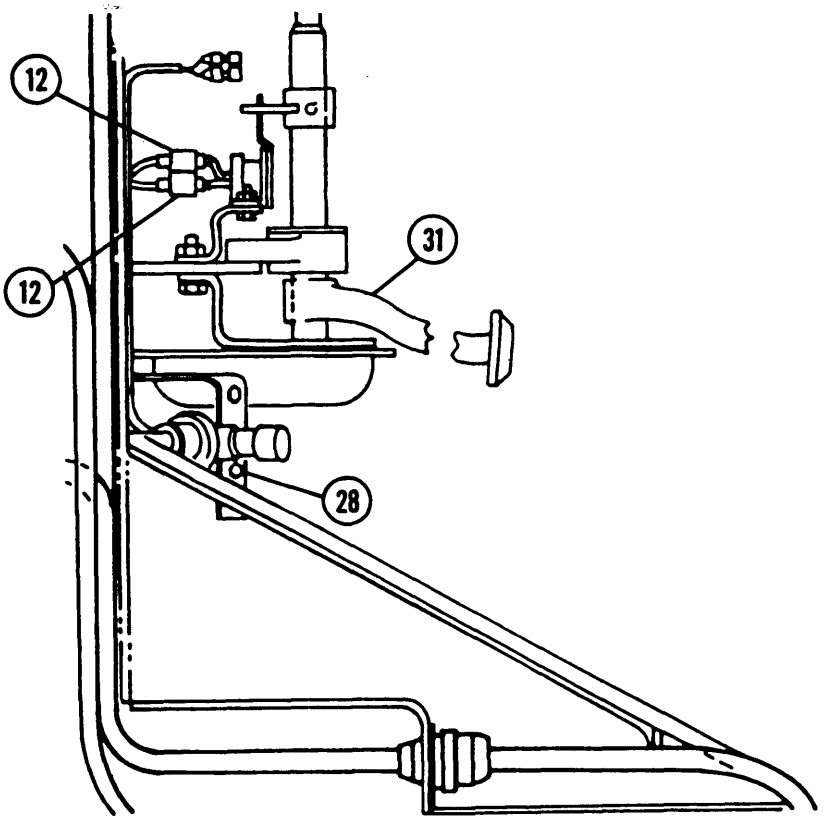

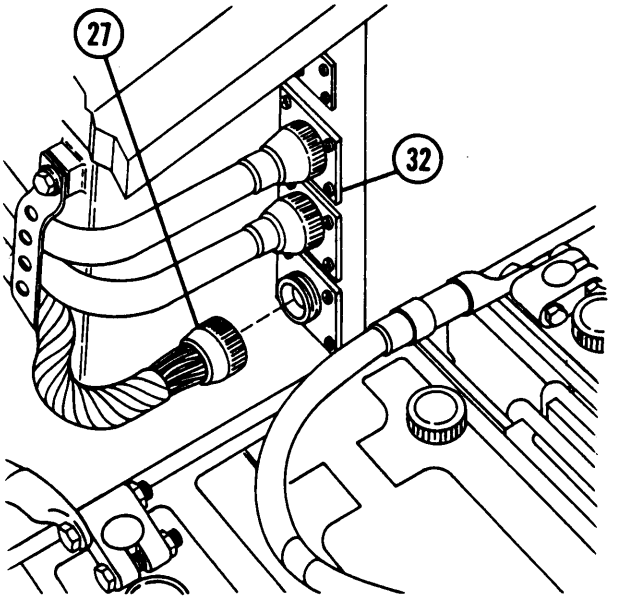
27
32

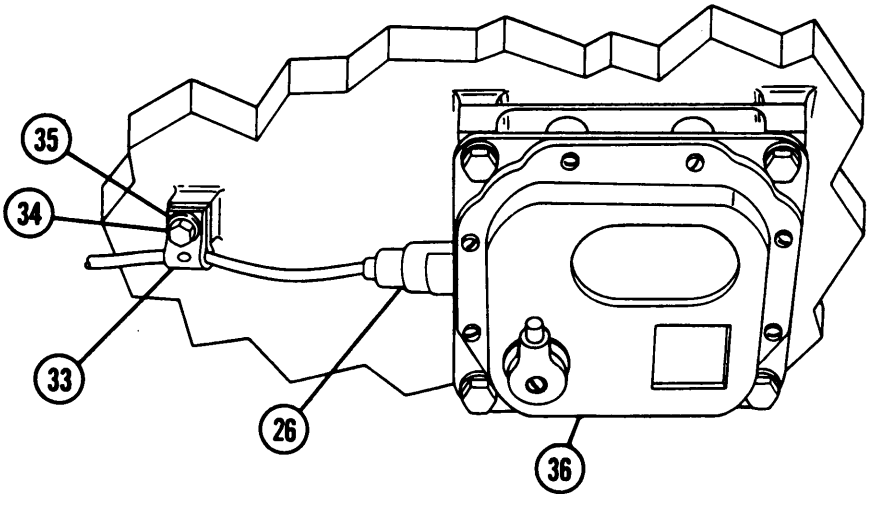
35
34
33
26
36

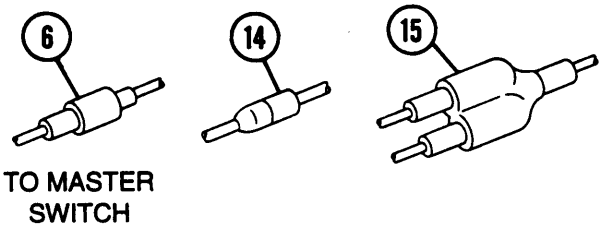
6
14
15
TO MASTER
SWITCH

## 7-11 BULKHEAD-TO-DRIVER'S INSTRUMENT PANEL WIRING HARNESS — CONTINUED

**a. Removal — Continued**

7 Disconnect connector (11) from fuel pump primer switch (37).

8 Disconnect connector (23) from circuit breaker (38).

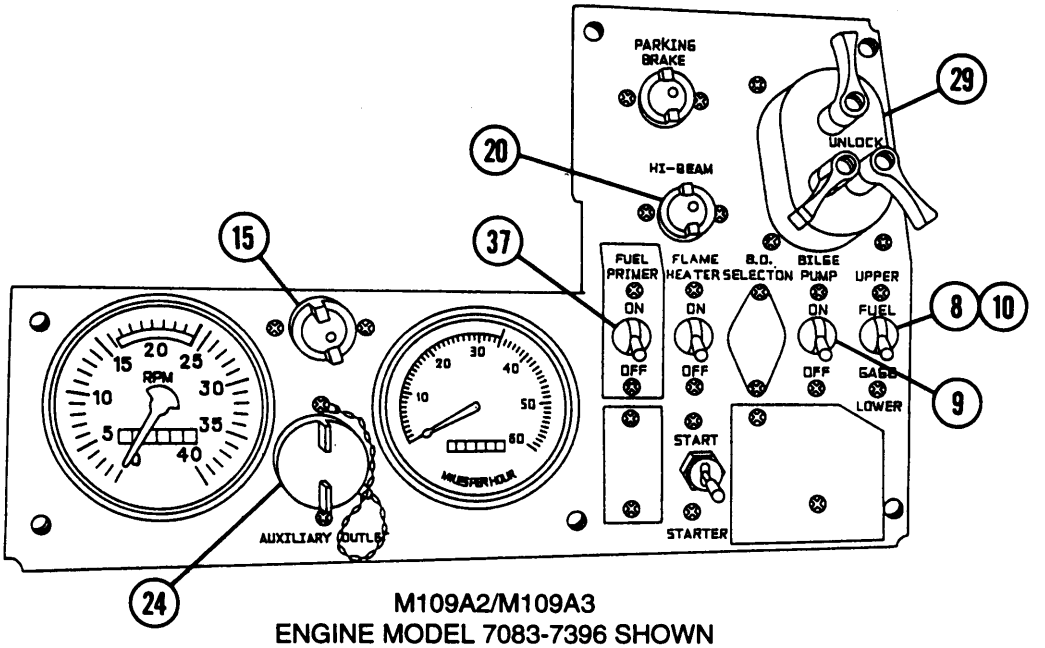


M109A2/M109A3
ENGINE MODEL 7083-7396 SHOWN

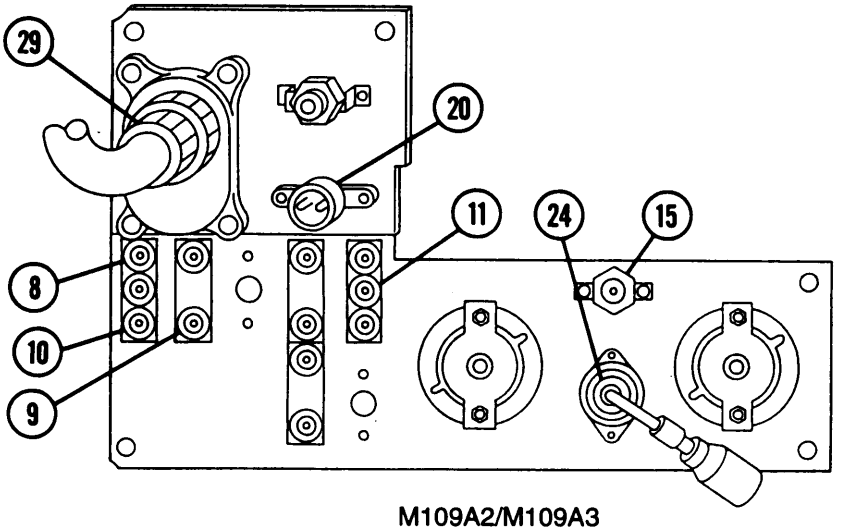


M109A2/M109A3
ENGINE MODEL 7083-7396 SHOWN

**NOTE**

For quick guide to wire connector locations see paragraphs 7-2 and 7-3.

9 Disconnect seven connectors (29 8, 9, 10, 5,20, and 24) from driver's instrument panel.

**NOTE**

Screws are located inside of hull on rear bulkhead.

10 Remove two screws (40), two flat washers (41), and two lockwashers (42) from left and right assemblies (43 and 44). Discard lockwashers.

11 Pull taillight assemblies (43 and 44) away from hull to expose connectors.

12 Disconnect three connectors (16, 18, and 19) from left taillight assembly (43).

13 Disconnect two connectors (16 and 17) from right taillight assembly (44).

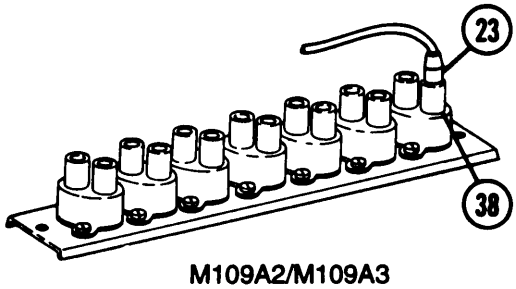


M109A2/M109A3

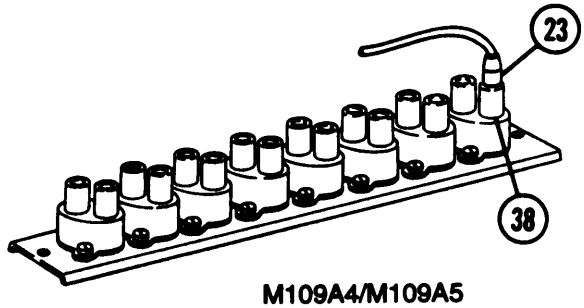


M109A4/M109A5

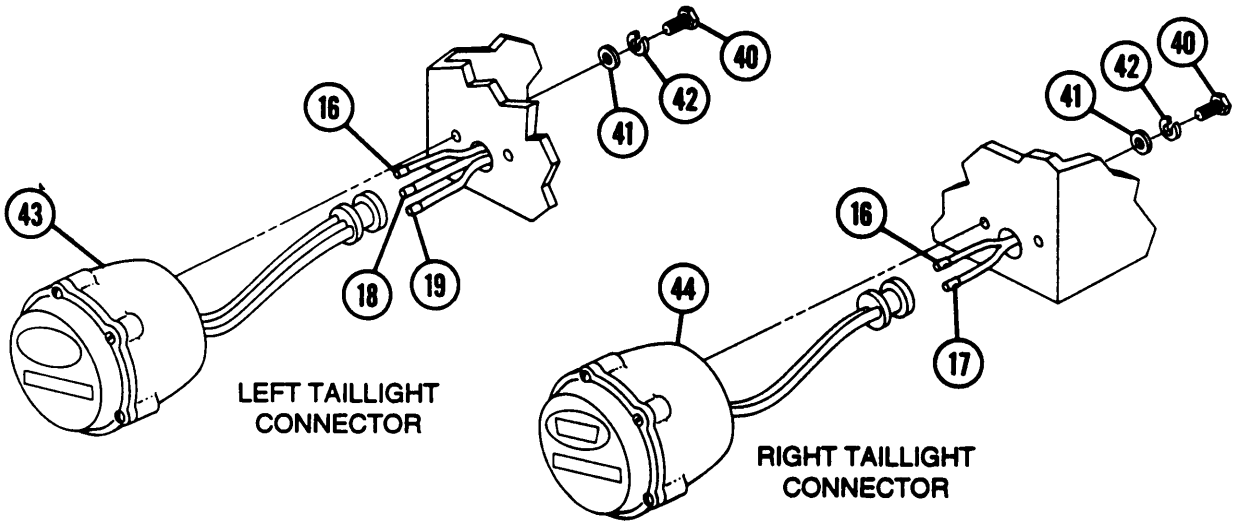

## 7-11 BULKHEAD-TO-DRIVER'S INSTRUMENT PANEL WIRING HARNESS — CONTINUED

**a. Removal — Continued**

14 Remove plastic strap (45), screw (46), and washer (47) to release wiring harness.

15 Remove 16 plastic straps (48), 16 screws (49), and 16 washers (50) (11 from left bulkhead and 5 from rear bulkhead).

**b. Disassembly**

1 Remove electrical tape only for sections being disassembled.

2 Separate/isolate wiring harness.

3 Disassemble wiring harness (TM 9-2350-311-20-1).

**c. Assembly**

1 Assemble wiring harness (TM 9-2350-311-20-1).

2 Apply electrical tape only for sections being assembled.

**d. Installation**

1 Install 16 plastic straps (48), 16 screws (49), and 16 washers (50) (11 from left bulkhead and 5 from rear bulkhead).

2 Install washer (47), screw (46), and plastic strap (45) to secure wiring harness.

3 Connect two connectors (16 and 17) to right taillight assembly (44).

4 Connect three connectors (16, 18, and 19) to left taillight assembly (43).

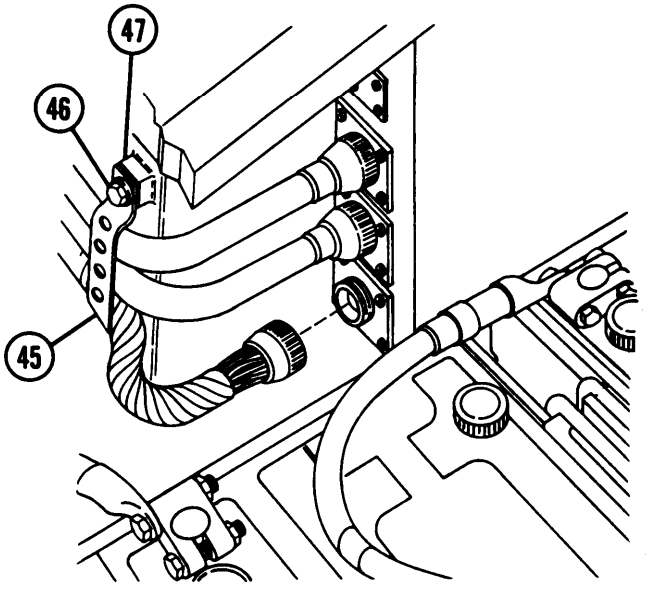


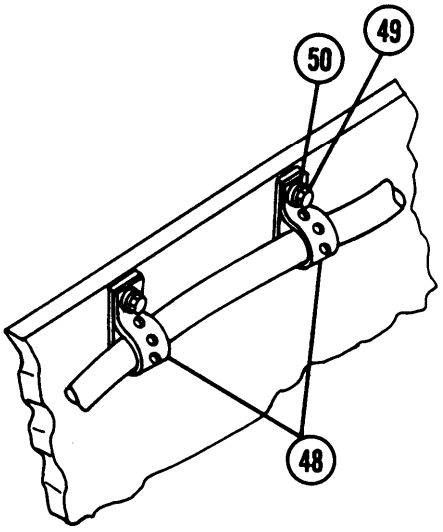


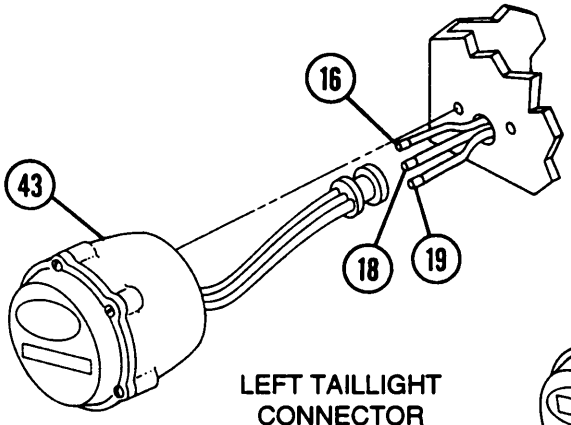


LEFT TAILLIGHT CONNECTOR

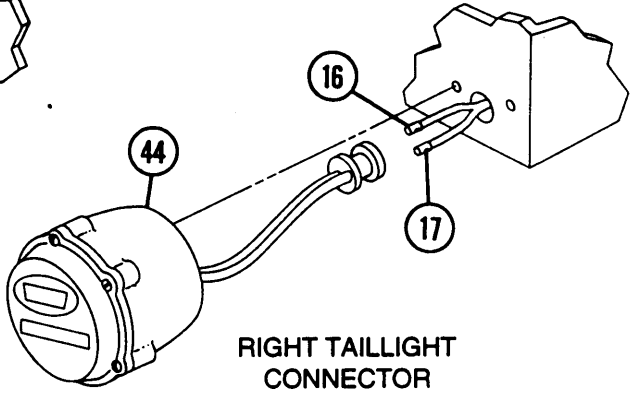


RIGHT TAILLIGHT CONNECTOR

## 7-11 BULKHEAD-TO-DRIVER'S INSTRUMENT PANEL WIRING HARNESS — CONTINUED

### d. Installation- Continued

**NOTE**

Install screws from inside hull on rear bulkhead.

5 Position left and right taillight assemblies (43 and 44) on hull and install two screws (40), two flat washers (41), and two new lookwashers (42).

**NOTE**

For quick guide to wire connector locations see paragraphs 7-2 and 7-3.

6 Connect seven connectors (29,8,9, 10,15,20, and 24) to driver's instrument panel (39).

**NOTE**

Connectors are located in well below driver's instrument panel and circuit breakers.

7 Connect connector (23) to circuit breaker (38).

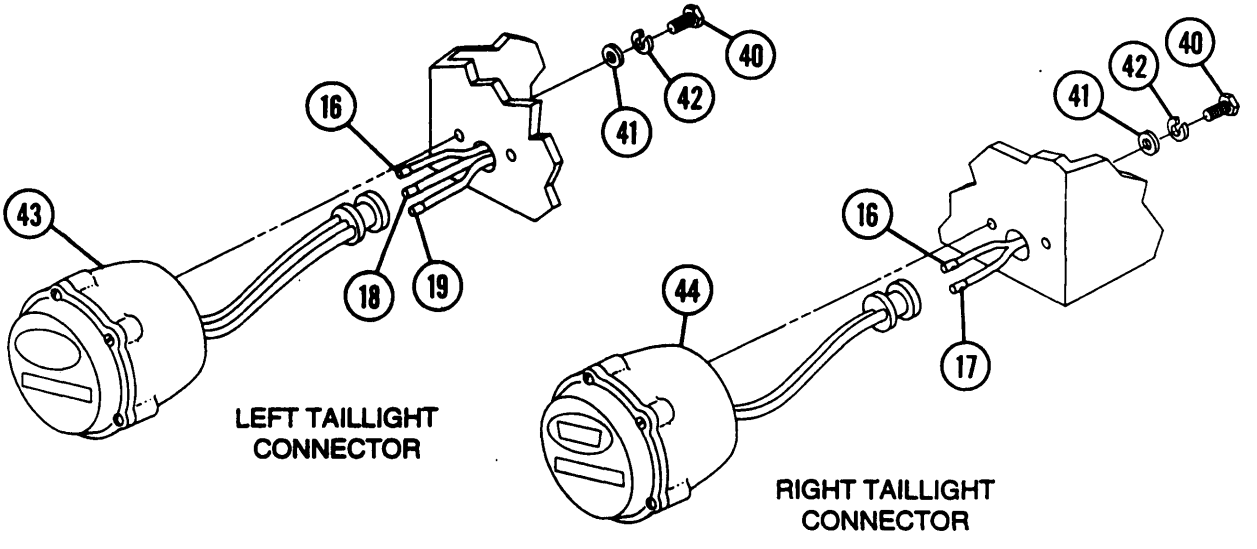

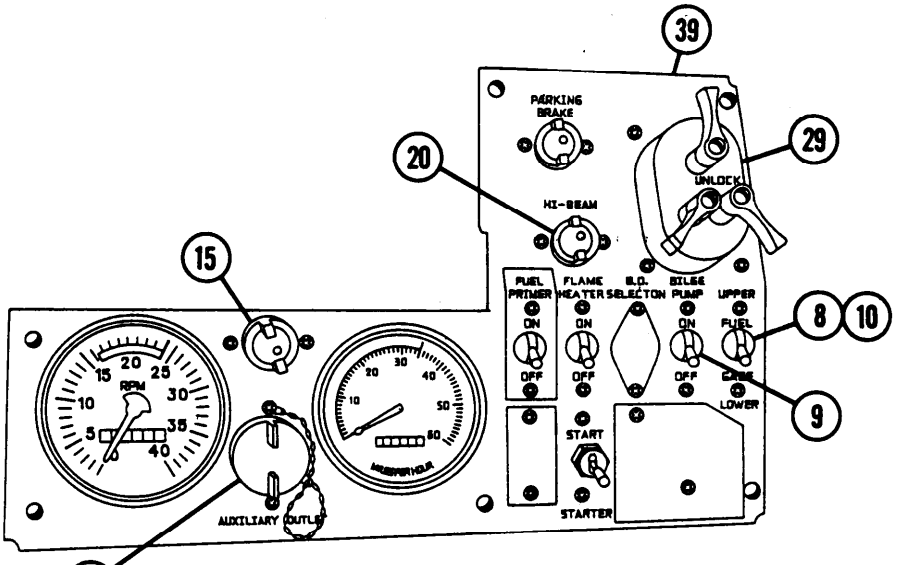


M109A2/M109A3
ENGINE MODEL 7083-7396 SHOWN

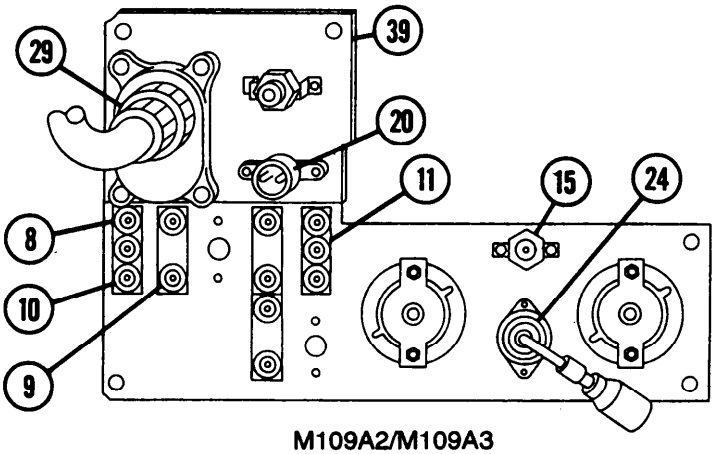


M109A2/M109A3
ENGINE MODEL 7083-7396 SHOWN

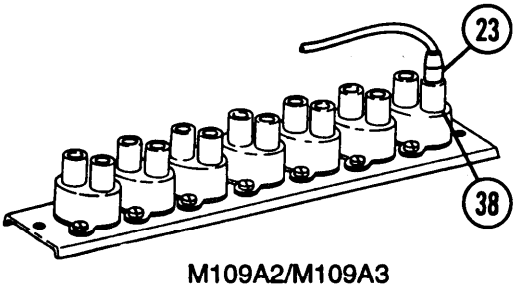


M109A2/M109A3

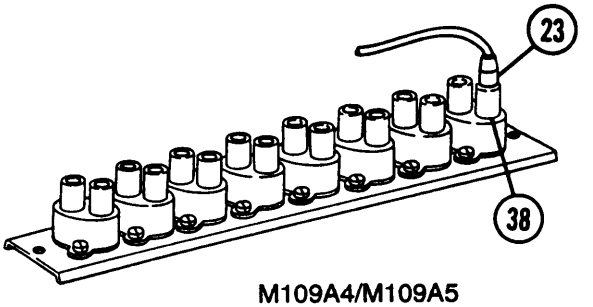


M109A4/M109A5

## 7-11 BULKHEAD-TO-DRIVER'S INSTRUMENT PANEL WIRING HARNESS — CONTINUED

**d. Installation — Continued**

8 Connect connector (11) to fuel pump primer switch (37).

9 Connect connector (15).

10 Connect connector (14).

11 Connect connector (6).

12 Connect connector (26) and install plastic strap (33), nut (34), and washer (35) to driver's dome light (36).

13 Connect connector (27) to bulkhead (32).

14 Connect two connectors (12 and 28) to brake pedal assembly (31).

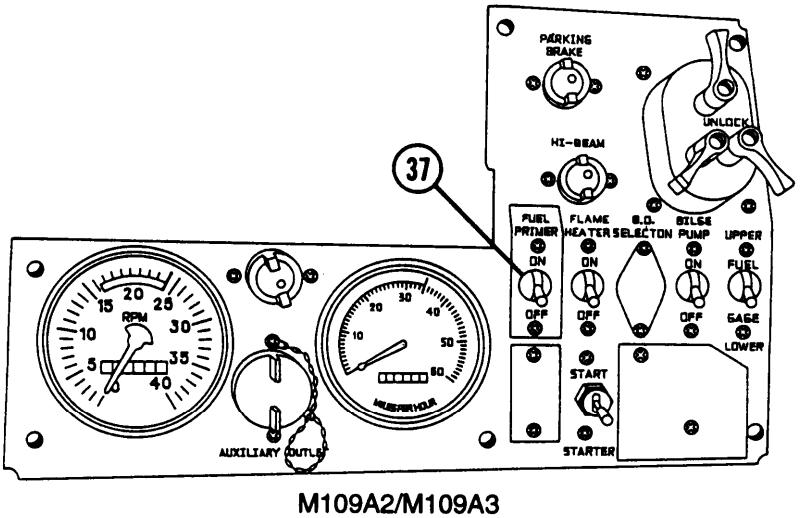


M109A2/M109A3
(ENGINE MODEL 7083-7396) SHOWN

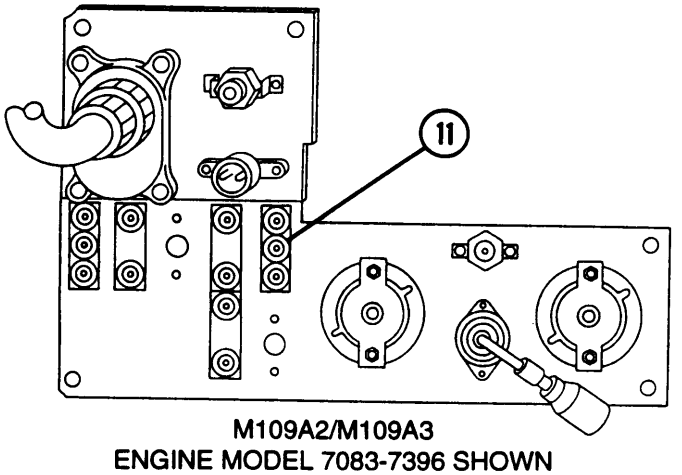


M109A2/M109A3
ENGINE MODEL 7083-7396 SHOWN

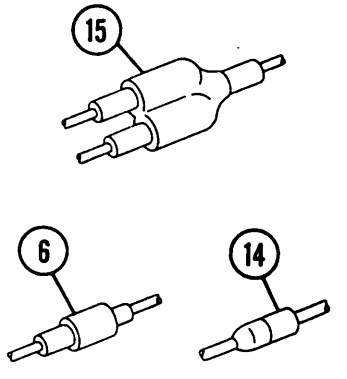


TO MASTER SWITCH

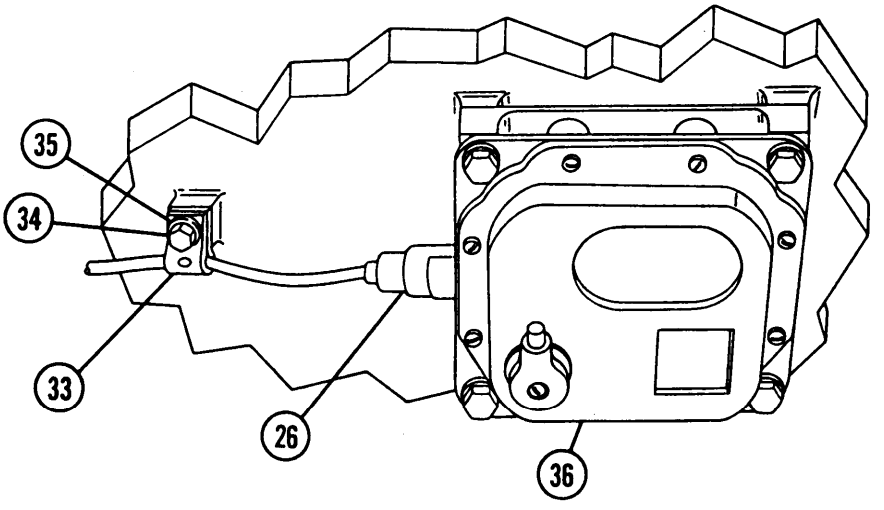


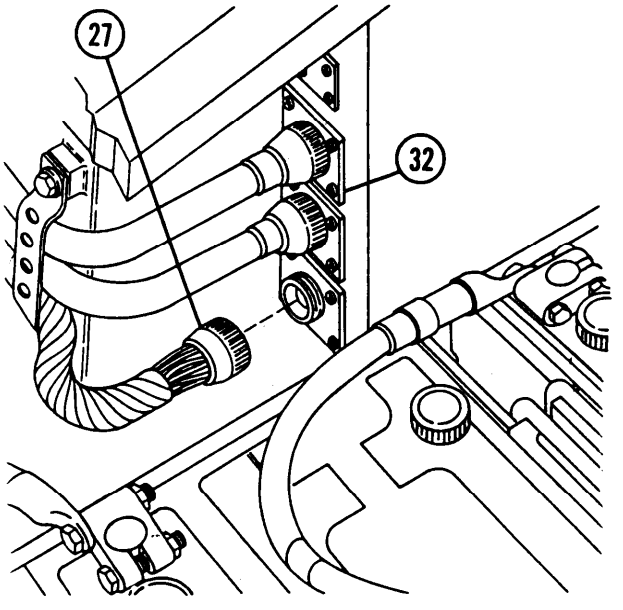


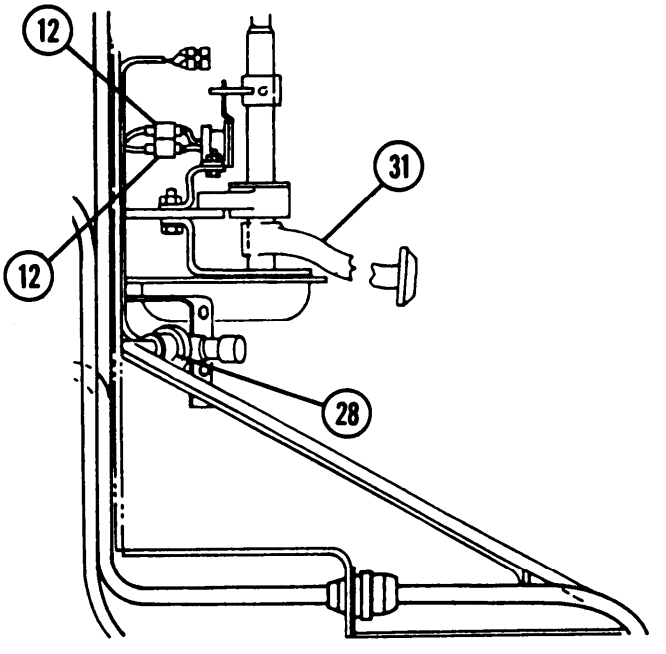


**NOTE**

FOLLOW-ON MAINTENANCE: Install portable instrument panel (TM 9-2350-311-20-1)
Connect batteries (TM 9-2350-311-20-1)

## 7-12 POWER LEAD WIRING HARNESS (M109A2)

This task covers: a. Removal b. Disassembly c. Assembly d. Installation

**INITIAL SETUP**

**Applicable Configurations**
M109A2

**Tools**
General mechanic's tool kit (item 14, Appx C)

**Materials/Parts**
Electrical tape — black (item 25, Appx B)
Gasket (item 63, Appx F)
Lockwashers (4) (item 30, Appx F)
Lockwashers (4) (item 34, Appx F)

**References**
TM 9-2350-311-20-1

**Equipment Conditions**
Batteries disconnected (TM 9-2350-311-20-1)
Driver's instrument panel removed (TM 9-2350-311-20-1)

**NOTE**

Vehicles with engine model 7083-7396 use connector 5 for flame heater system.
Vehicles with engine model 7083-7391 use connector 5 for glow plug system.

| Connector No. | Electrical Lead To: | Wire No. |
|---|---|---|
| 1 | Connector bulkhead (to slave start receptacle) | 49 |
| 2 | Connector accessory control box | 10 |
| 3 | Connector slip ring segment board | 47 |
| 4 | Connector hull lighting wiring harness (interconnects with wire 15) | 10 |
| 5 | Connector starter switch/flame heater switch circuit breaker (to wire 15) (engine model 7083-7396) or connector starter switch/glow plug switch (engine model 7083-7391) | 10 |
| 6 | Connector fuel pump circuit breaker (to wire 76) | 10 |
| 7 | Connector fuel prime pump switch circuit breaker (to wire 588) | 10 |
| 8 | Connector master warning light/ engine instrumentation circuit breaker (to wire 27) | 10 |
| 9 | Connector bilge pump switch circuit breaker (to wire 450) | 10 |
| 10 | Connector auxiliary outlet/dome light circuit breaker (to wires 37 and 38) | 10 |
| 11 | Connector slave start receptacle | 49 |
| 12 | Ground | 50 |

**a. Removal**

1 Disconnect six connectors (5 thru 10) from circuit breakers (13).

2 Disconnect connector (4) from wire 15 lead.

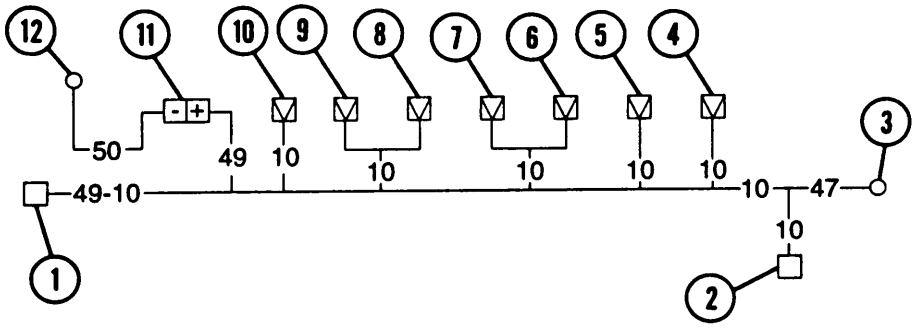


WIRING DIAGRAM

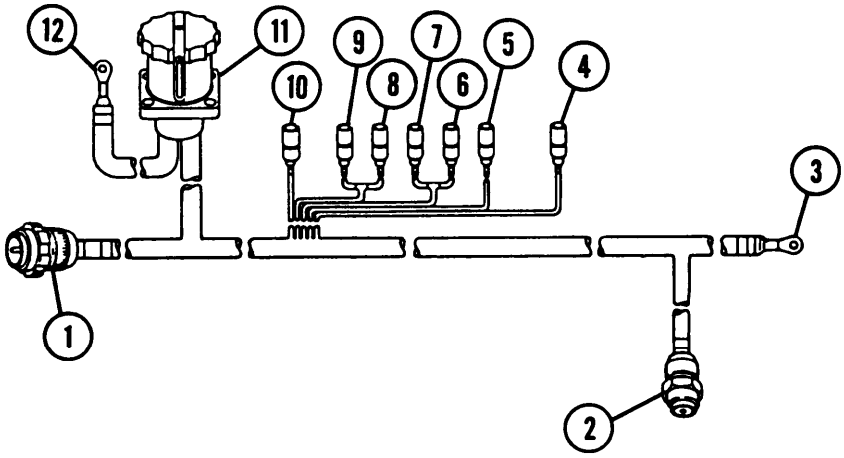


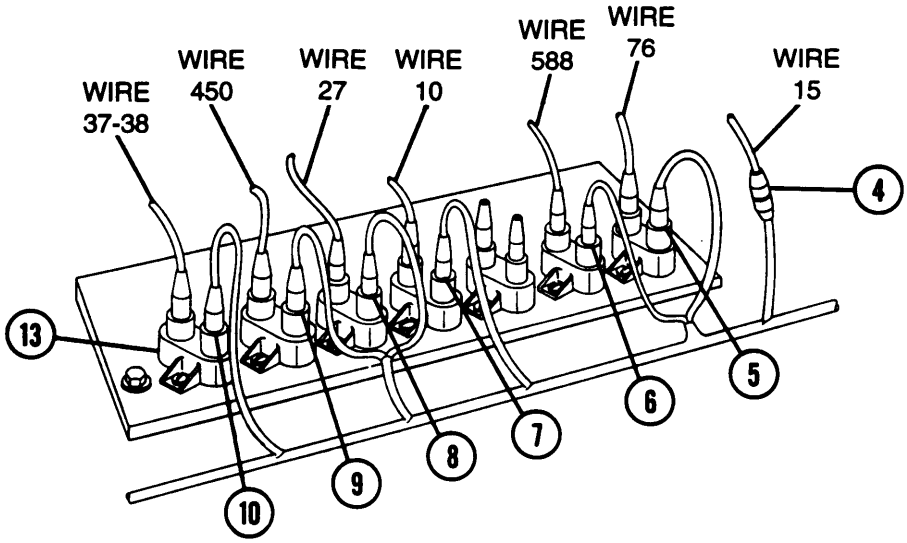

## 7-12 POWER LEAD WIRING HARNESS (M109A2) — CONTINUED

**a. Removal — Continued**

3 Disconnect connector (2) from accessory control box (14).

4 Remove screw (15), washer (16), and nut (17) from slip ring segment board (18) and release lead (3).

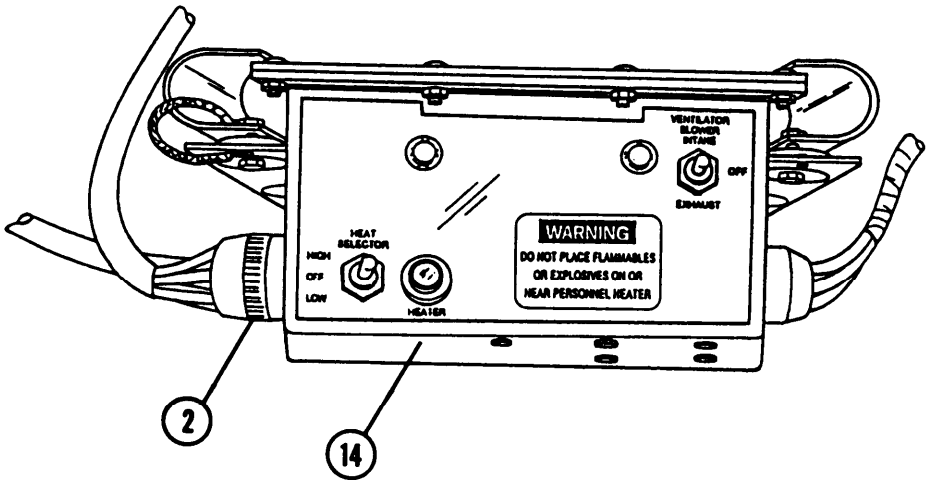


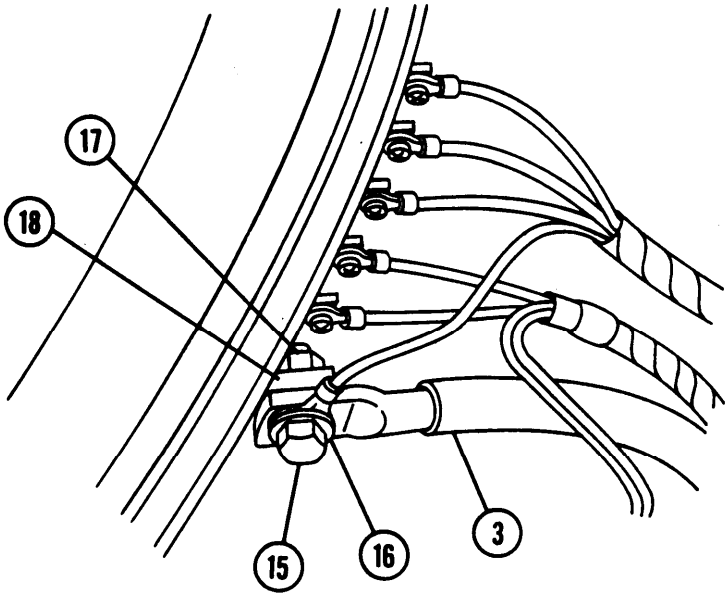

**NOTE**

Wiring harness maybe removed from hull with slave start receptacle attached or leads can be pulled out of receptacle with sockets as required. If wiring harness removed is without receptacle, skip steps 5 and 6.

5 Remove slave start receptacle (19) as follows:

(a) Remove four screws (20), four lockwashers (21), and gasket (22) from battery compartment bulkhead. Discard lockwashers and gasket.

(b) Push slave start receptacle (19) with mounting plate (23) into driver's compartment.

6 Remove four screws (24) and four lockwashers (25) and separate slave start receptacle (19) from mounting plate (23). Discard lockwashers.

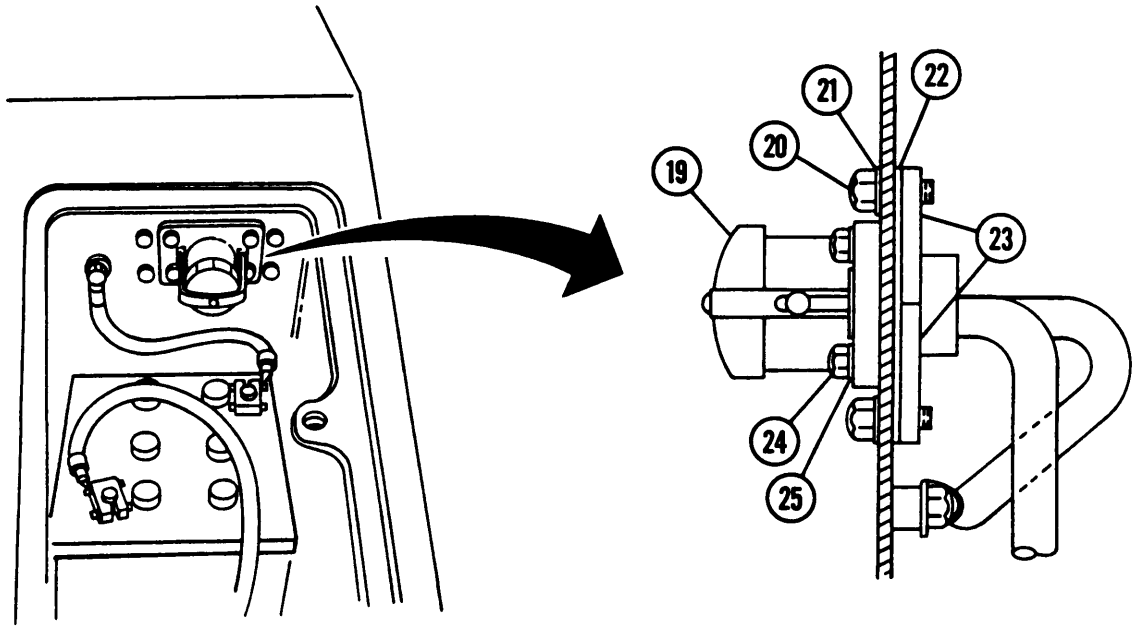

## 7-12 POWER LEAD WIRING HARNESS (M109A2) — CONTINUED

**a. Removal — Continued**

7 Disconnect connector (1) at driver's compartment bulkhead.

8 Remove two plastic straps (26), four screws (27), and four washers (28) to release wiring harness.

9 Remove 11 plastic straps (29), 11 screws (30), and 11 washers (31).

**b. Disassembly**

Disassemble wiring harness leads (TM 9-2350-311-20-1).

**c. Assembly**

Assemble wiring harness leads (TM 9-2350-31 1-20-1).

**d. Installation**

1 Install 11 plastic straps (29), 11 washers (31), and 11 screws (30).

2 Install two plastic straps (26), four washers (28), and four screws (27) to secure wiring harness.

3 Connect connector (1) at driver's compartment bulkhead.

4 Connect slave start receptacle (19) to mounting plate (23) with four new lockwashers (25) and four screws (24).

**NOTE**

Wiring harness maybe removed from hull with slave start receptacle attached or leads can be pulled out of receptacle with sockets as required. If wiring harness removed is without receptacle, skip steps 5 and 6.

5 Install receptacle (19) as follows:

(a) Push receptacle (19) with mounting plate (23) from driver's compartment into battery compartment.

(b) Install new gasket (22), four new lockwashers (21), and four screws (20) to battery compartment bulkhead.

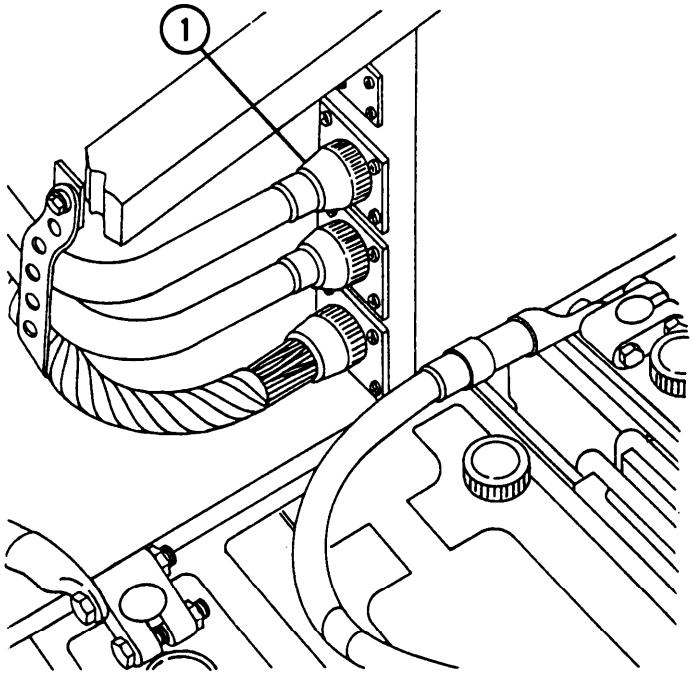
1

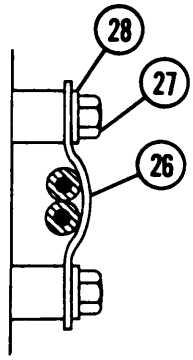
28
27
26

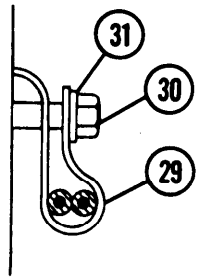
31
30
29

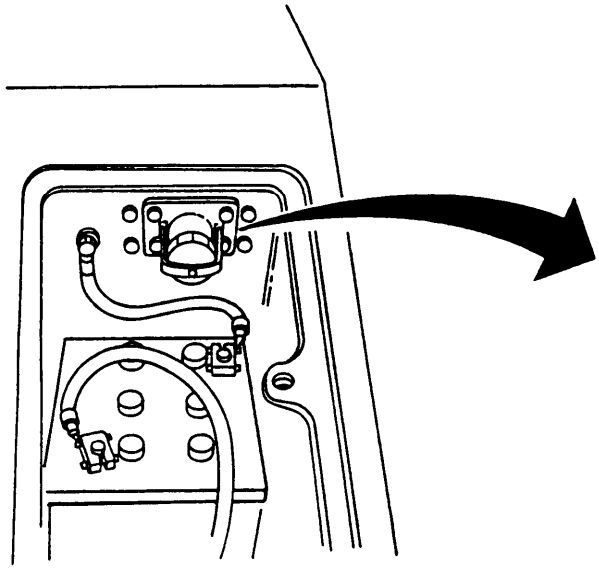

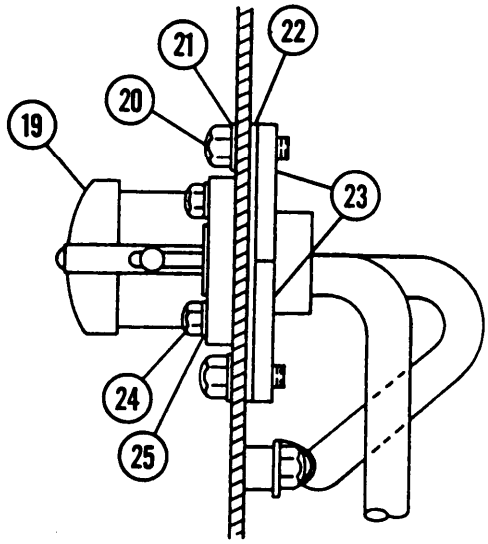
21
22
20
19
23
24
25

## 7-12 POWER LEAD WIRING HARNESS (MI09A2) — CONTINUED

**d. Installation — Continued**

6 Secure lead (3) by Installing washer (16), screw (15), and nut (17) to slip ring segment board (18).

7 Connect connector (2) to accessory control box (14).

8 Connect connector (4) to wire 15 lead.

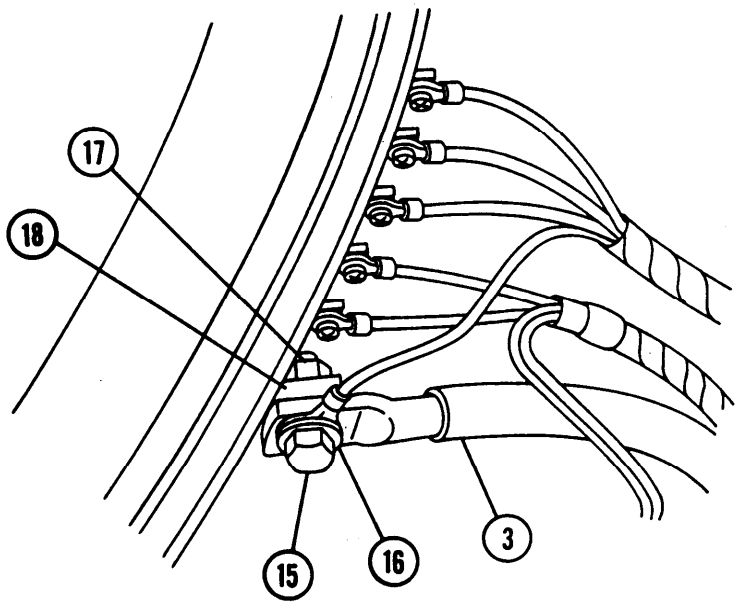


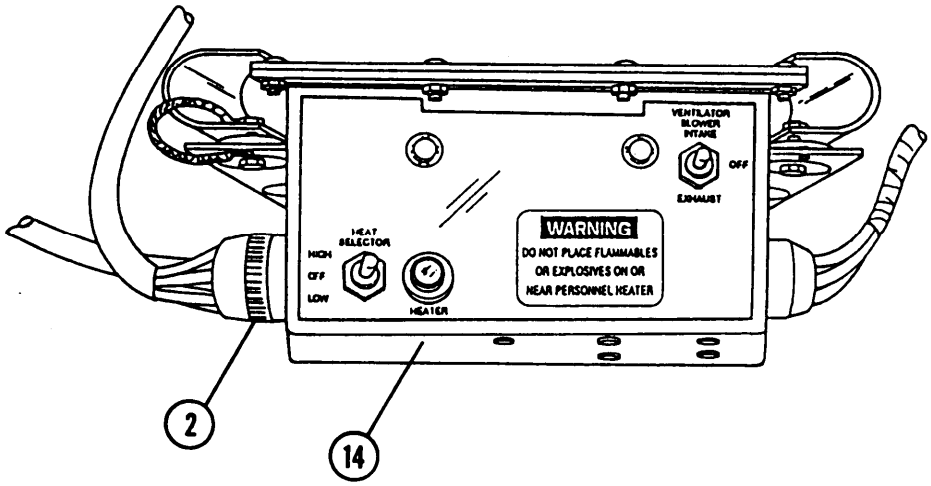

9 Connect six connectors (5 thru 10) to circuit breakers (13).

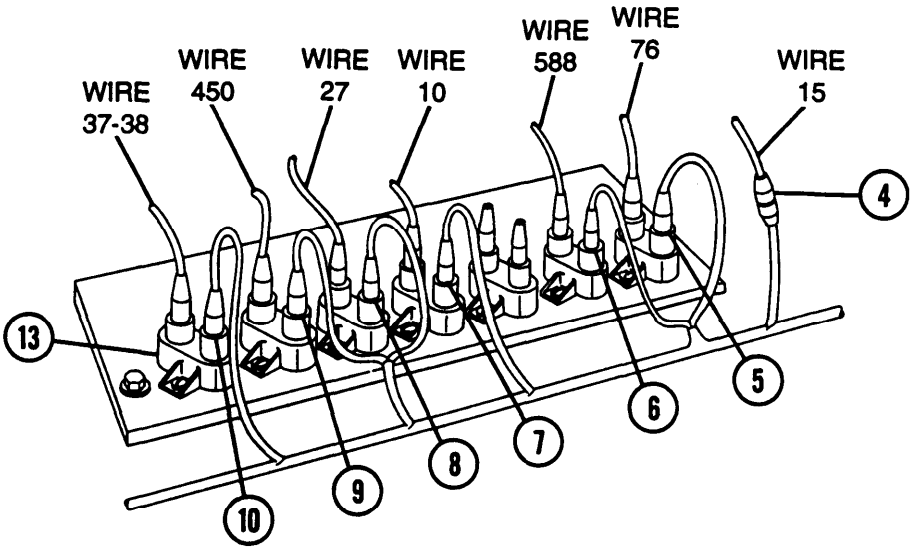


**NOTE**

FOLLOW-ON MAINTENANCE: Install driver's instrument panel (TM 9-2350-311-20-1)
Connect batteries (TM 9-2350-311-20-1)

## 7-13 POWER LEAD (M109A2/M109A3)

This task covers: a. Removal b. Disassembly c. Assembly d. Installation

### INITIAL SETUP

**Applicable Configurations**
M109A2/M109A3

**Tools**
General mechanic's tool kit (item 14, Appx C)

**Materials/Parts**
Electrical tape — black (item 25, Appx B)

**References**
TM 9-2350-311-20-1

**Equipment Conditions**
Batteries disconnected (TM 9-2350-311-20-1)
Driver's instrument panel removed (TM 9-2350-311-20-1)

## 7-13 POWER LEAD (M109A2/M109A3) — CONTINUED

**NOTE**

Vehicles with engine model 7083-7396 use connector 5 for flame heater system. Vehicles with engine model 7083-7391 use connector 5 for glow plug controller system.

| Connector No. | Electrical Lead To: | wire No. |
|---|---|---|
| 1 | Connector bulkhead (to NATO slave start receptacle) | 49 |
| 2 | Connector accessory control box | 10 |
| 3 | Connector slip ring segment board | 47 |
| 4 | Connector hull lighting wiring harness (interconnects with wire 15) | 10 |
| 5 | Connector starter switch/frame heater switch circuit breaker (to wire 10) (engine model 7083-7396) or connector starter switch/ glow plug switch circuit breaker (to wire 10) (engine model 7083-7391) | 10 |
| 6 | Connector fuel prime pump switch circuit breaker (to wire 586) | 10 |
| 7 | Connector master warning light/engine instrumentation circuit breaker (to wire 27) | 10 |
| 8 | Connector bilge pump switch circuit breaker (to wire 450) | 10 |
| 9 | Connector auxiliary outlet/dome light circuit breaker (to wires 37-38) | |
| 10 | Connector NATO slave start receptacle | 49 |

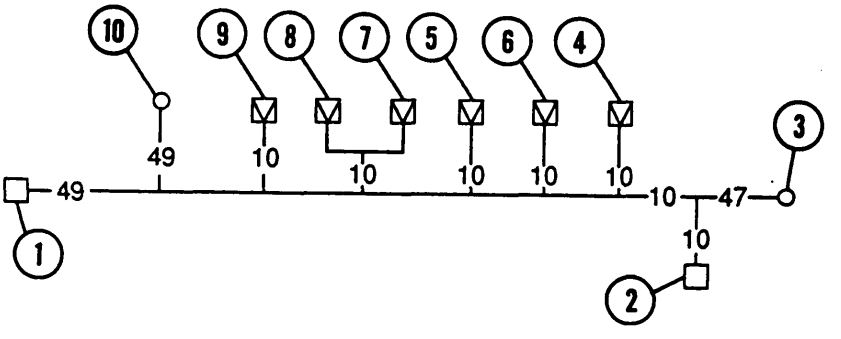


**WIRING DIAGRAM**

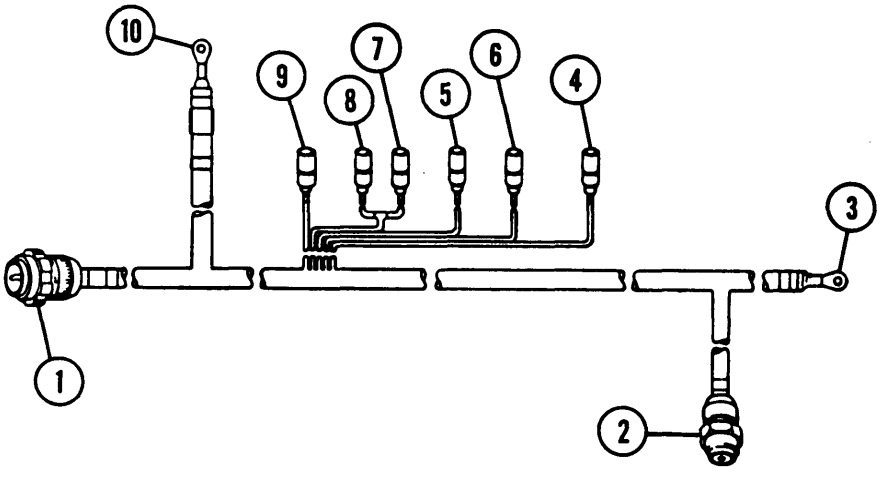

a. Removal

1 Disconnect five connectors (5 thru 9) from circuit breakers (11).

2 Disconnect connector (4) at wire 15 lead.

3 Disconnect connector (2) at accessory control box (12).

4 Remove screw (13), washer (14), and nut (15) from slip ring segment board (16) and release lead (3).

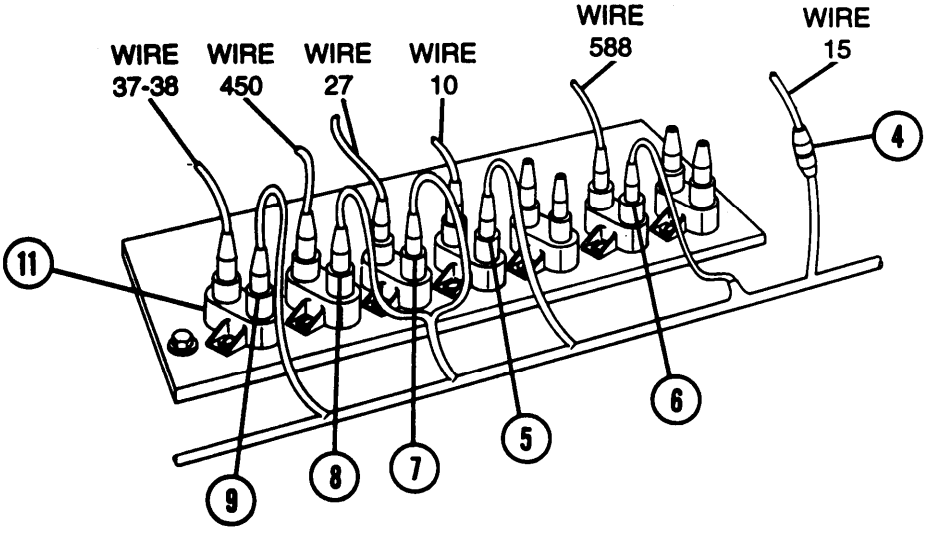


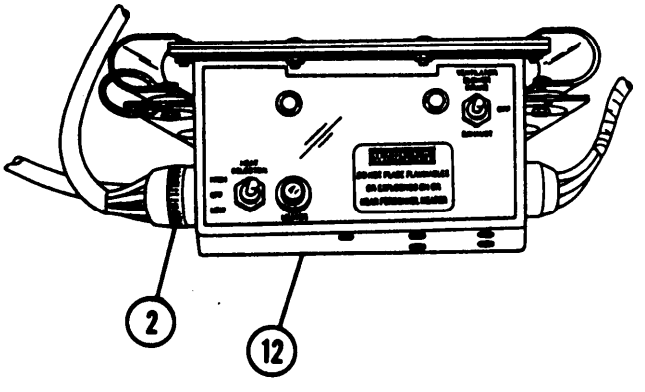


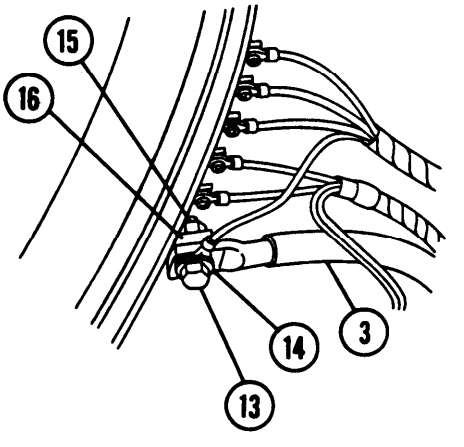

## 7-13 POWER LEAD (M109A2/M109A3) — CONTINUED

**a. Removal — Continued**

5 Disconnect connector (1) from driver's compartment bulkhead.

6 Remove two plastic straps (17), four screws (18), and four washers (19) to release power lead.

7 Remove 11 plastic straps (20), 11 screws (21), and 11 washers (22).

8 Remove screw (23), washer (24), and lead (10) and remove wiring harness.

9 Remove two screws (25), two washers (26), and ground lead (27).

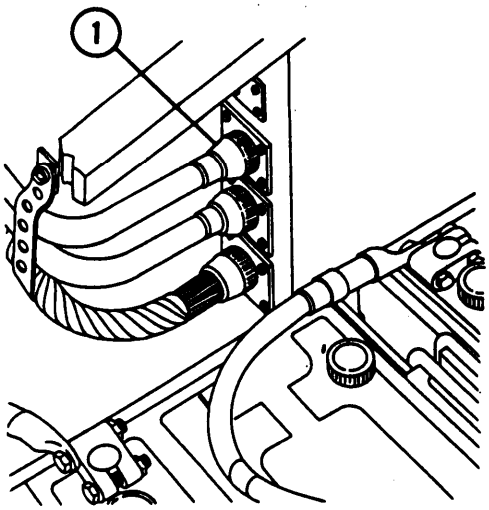


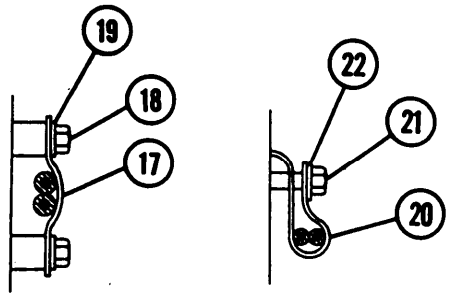


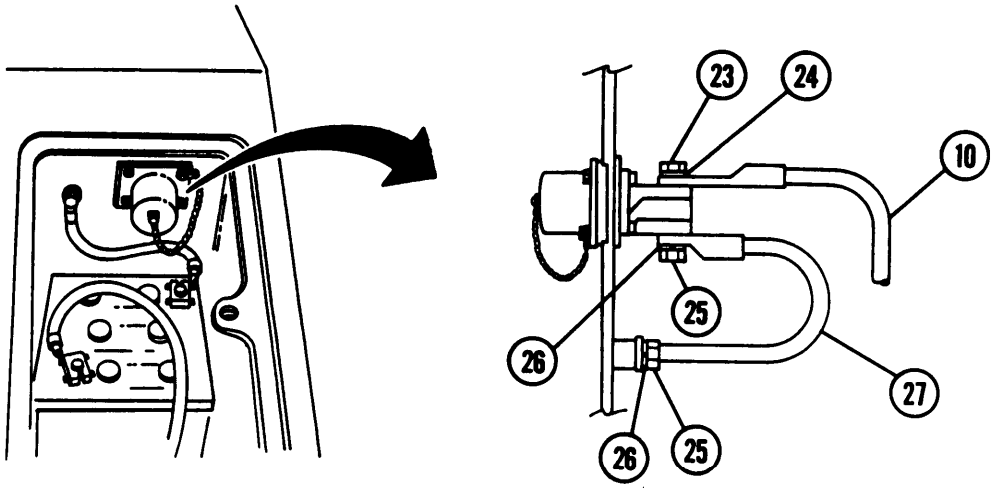

**b. Disassembly**

Disassemble wiring harness leads (TM 9-2350-311-20-1).

**c. Assembly**

Assemble wiring harness leads (TM 9-2350-311-20-1).

**d. installation**

1 Install ground lead (27), two washers (26), and two screws (25).

2 Install wiring harness, lead (10), washer (24), and screw (23).

3 Install 11 plastic straps (20), 11 screws (21), and 11 washers (22).

4 Install two plastic straps (17), four washers (1 9), and four screws (18) to secure power lead.

5 Connect connector (1) to driver's compartment bulkhead.

6 Install lead (3), washer (14), screw (13), and nut (15) to slip ring segment board (16).

7 Connect connector (2) at accessory control box (1 2).

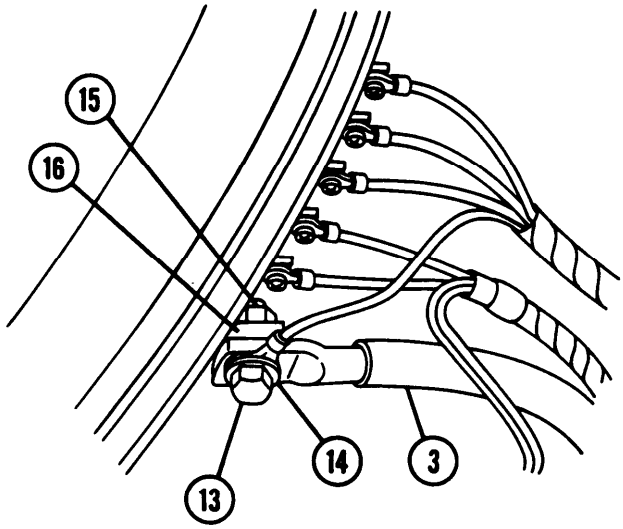


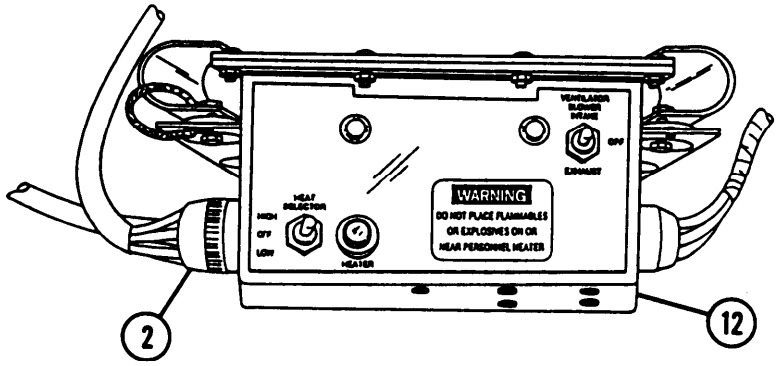

## 7-13 POWER LEAD (M109A2?M109A3) — CONTINUED

**d. Installation — Continued**

8 Connect connector (4) at wire 15 lead.

9 Connect five connectors (5 thru 9) to circuit breakers (11).

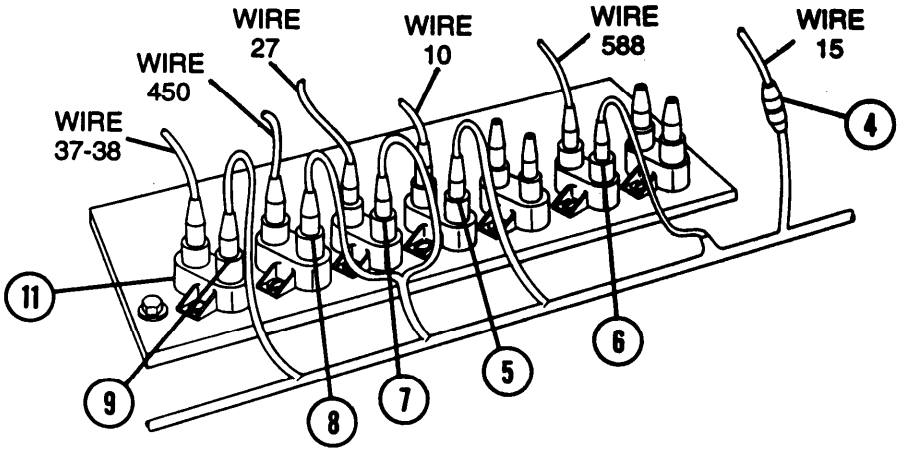


**NOTE**

FOLLOW-ON MAINTENANCE: Install driver's instrument panel (TM 9-2350-311-20-1)
Connect batteries (TM 9-2350-311-20-1)

## 7-14 POWER LEAD (M109A4/M109A5)

This task covers: a. Removal b. Disassembly c. Assembly d. Installation

**INITIAL SETUP**

Applicable Configurations
M109A4/M109A5

Tools
General mechanic's tool kit (item 14, Appx C)

Materials/Parts
Electrical tape — black (item 25, Appx B)
Lockwashers (17) (item 35, Appx F)

References
TM 9-2350-311-20-1

Equipment Conditions
Batteries disconnected (TM 9-2350-311-20-1)
Driver's instrument panel removed (TM 9-2350-311-20-1)

**NOTE**

Vehicles with engine model 7083-7396 use connector 8 for flame heater system. Vehicles with engine model 7083-7391 use connector 8 for glow plug controller system.

| Connector No. | Electrical Lead To: | Wire No. |
|---|---|---|
| 1 | Connector bulkhead | 10 |
| 2 | Connector accessory control box | 10 |
| 3 | Connector slip ring segment board | 47 |
| 4 | Connector hull lighting wiring harness (interconnects with wire 15) | 10 |
| 5 | Connector NBC circuit breaker (to wire 438) | 10 |
| 6 | Connector fuel prime pump switch circuit breaker (to wire 588) | 10 |
| 7 | "Y" connector in-tank fuel pump system relay (to wire 10) | 10 |
| 8 | Connector starter switch/flame heater switch circuit breaker (to wire 10) (engine model 7083-7396) or connector starter switch/glow plug switch circuit (engine model 7083-7391 ) | 10 |
| 9 | Connector master warning light/engine instrumentation circuit breaker (to wire 27) | 10 |
| 10 | Connector bilge pump switch circuit breaker (to wire 450) | 10 |
| 11 | Connector auxiliary outlet/dome light circuit breaker (to wires 37 and 38) | 10 |

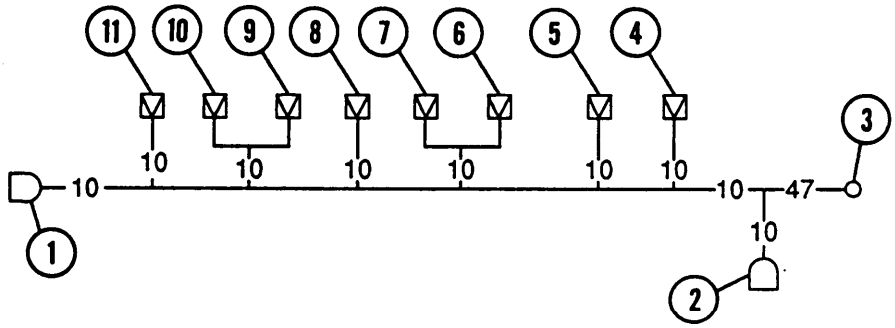


**WIRING DIAGRAM**

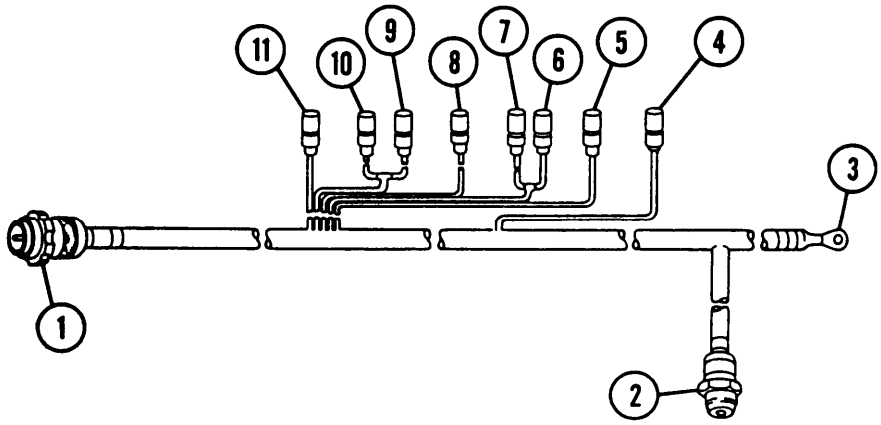

## 7-14 POWER LEAD (M109A4/M109A5) — CONTINUED

**a. Removal**

1 Disconnect six connectors (5, 6, and 8 thru 11) from circuit breakers (1 2).

2 Disconnect connector (4) at wire 15 lead.

3 Disconnect connector (7) at "Y" connector.

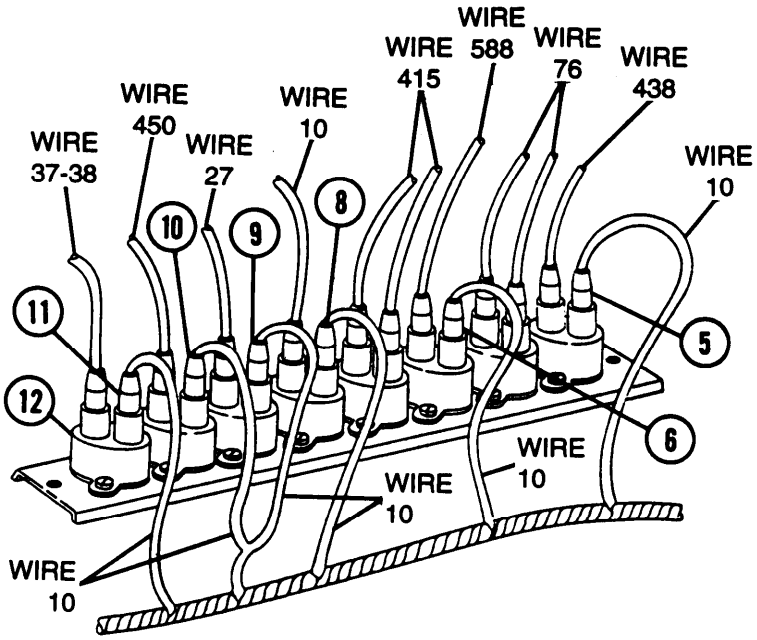


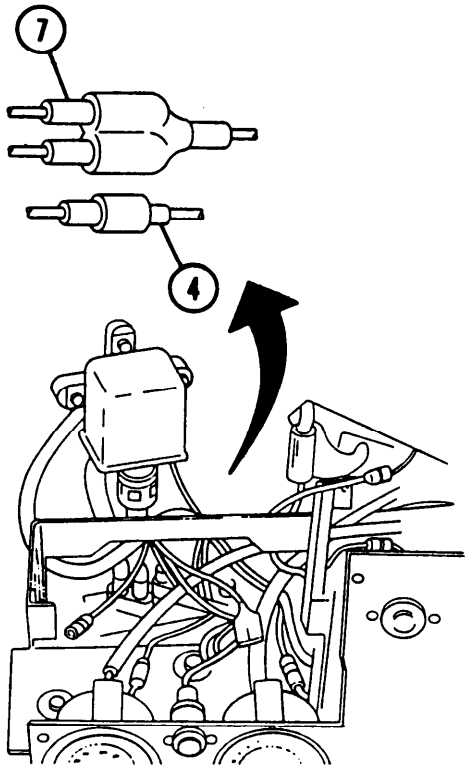

4 Disconnect connector (2) at accessory control box (13).

5 Remove screw (14), washer (15), and nut (16) from slip ring segment board (17) and release lead (3).

6 Disconnect connector (1) at driver's compartment bulkhead.

7 Remove two plastic straps (18), four screws (19), four lockwashers (20), and four washers (21). Release power lead and reinstall straps, washers, lockwashers, and screws. Discard lockwashers.

8 Remove 13 plastic straps (22), 13 screws (23), 13 lockwashers (24), and 13 washers (25). Release power lead and reinstall straps, washers, lockwashers, and screws. Discard lockwashers.

9 Remove wiring harness from hull.

**b. Disassembly**

Disassemble wiring harness leads (TM 9-2350-311-20-1).

**c. Assembly**

Assemble wiring harness leads (TM 9-2350-311-20-1).

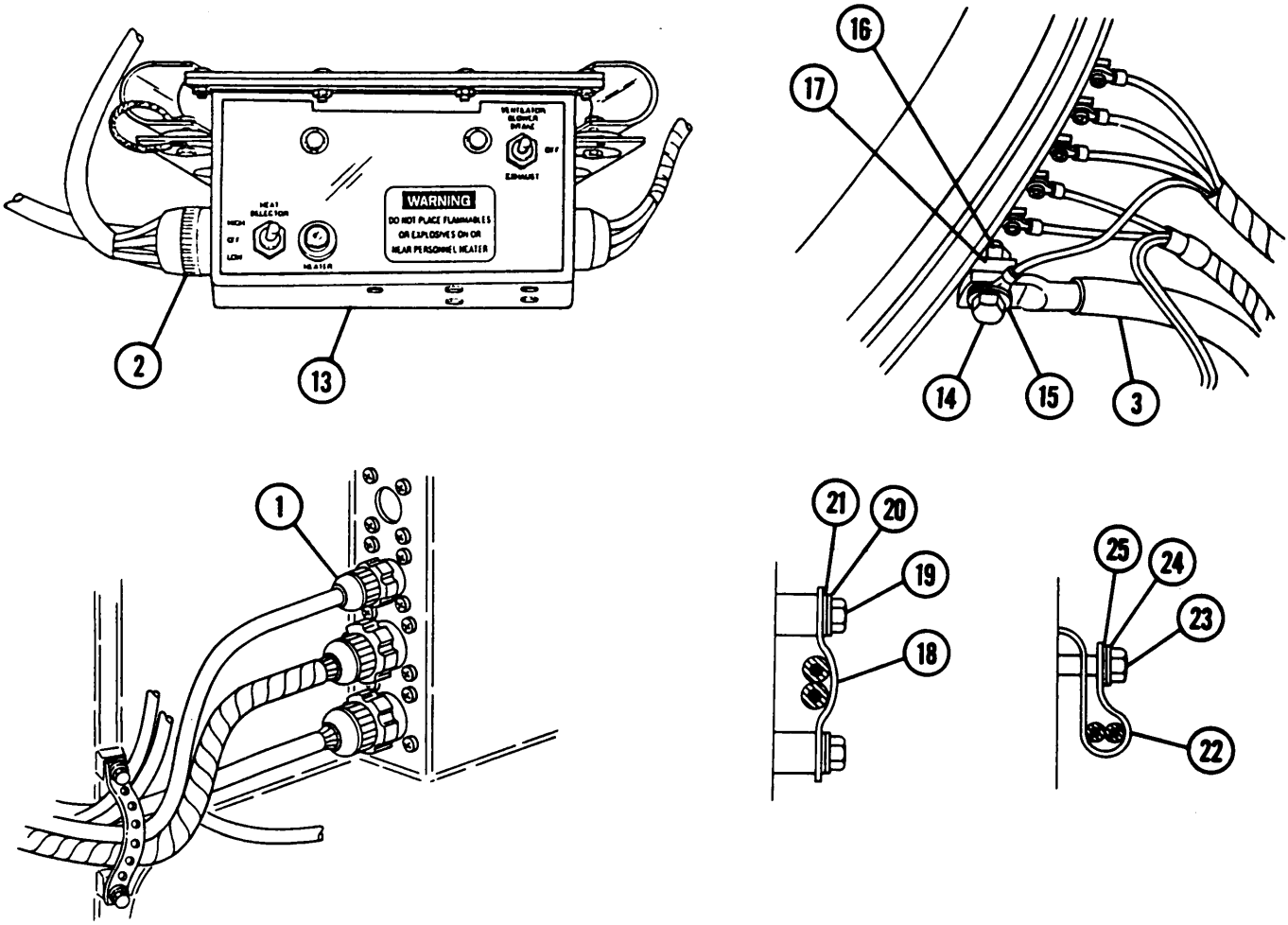

## 7-14 POWER LEAD (M109A4/M109A5) — CONTINUED

**d. Installation**

1 Install wiring harness to hull.

2 Secure power lead and install 13 plastic straps (22), 13 washers (25), 13 new lockwashers (24), and 13 screws (23).

3 Secure power lead and install two plastic straps (18), four washers (21), four new lockwashers (20), and four screws (19).

4 Connect connector (1) at driver's compartment bulkhead.

5 Install lead (3), washers (15), screw (14), and nut (16) to slip ring segment board (17).

6 Connect connector (2) at accessory control box (13).

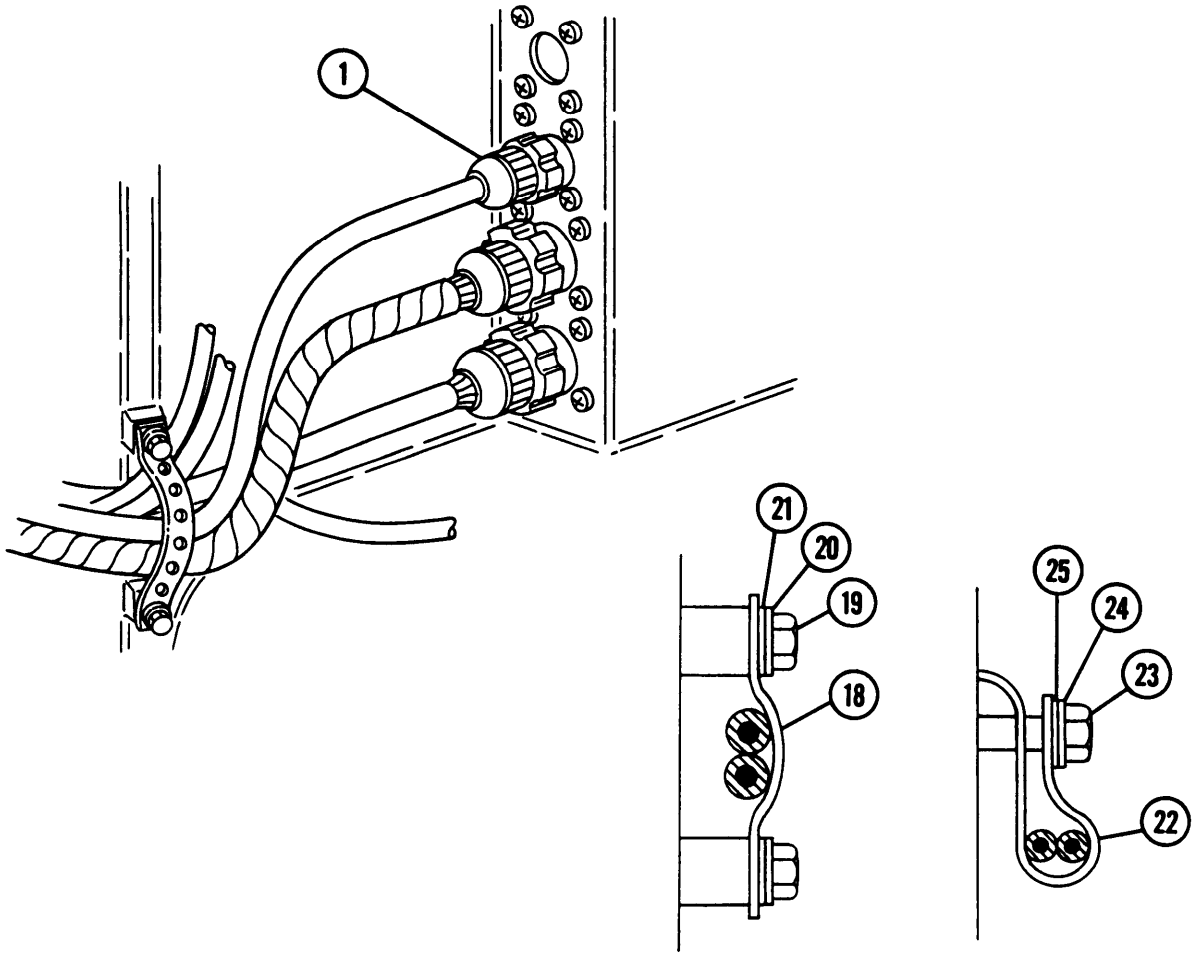

7 Connect connector (7) at “Y” connector.

8 Connect connector (4) at wire 15 lead.

9 Connect six connectors (5, 6, and 8 thru 11) to circuit breakers (12).

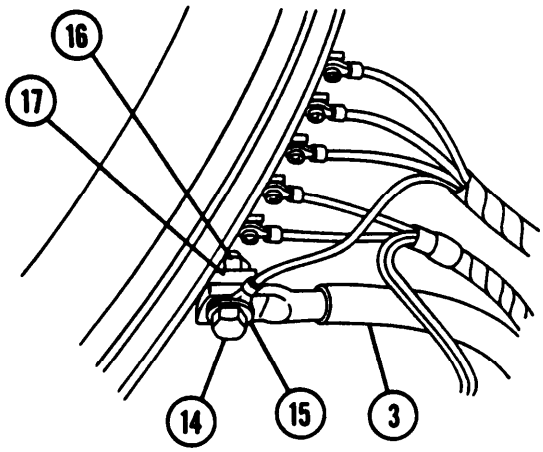


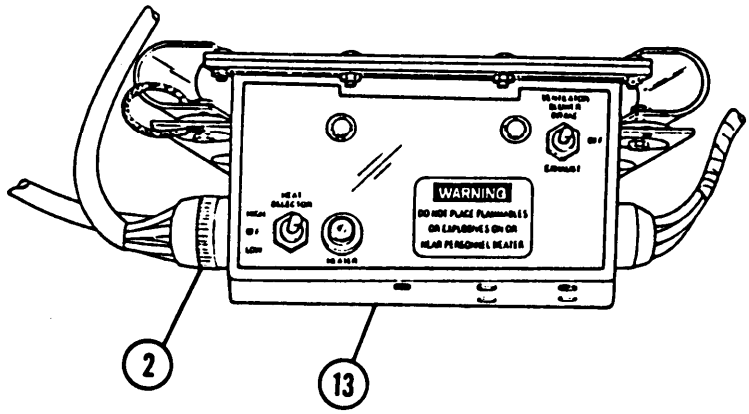


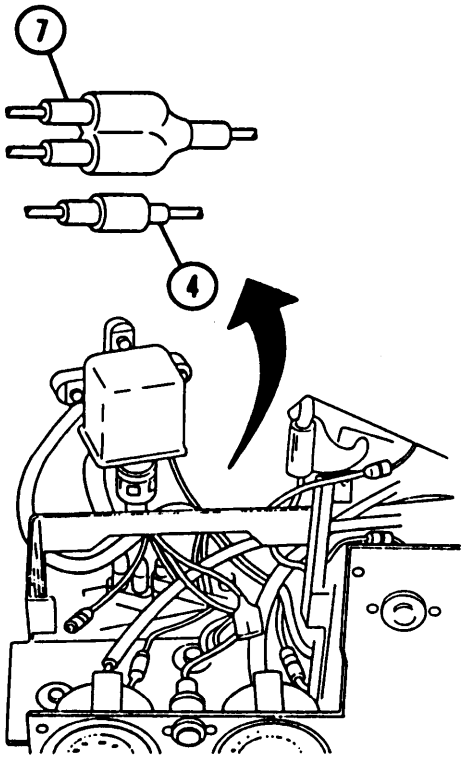


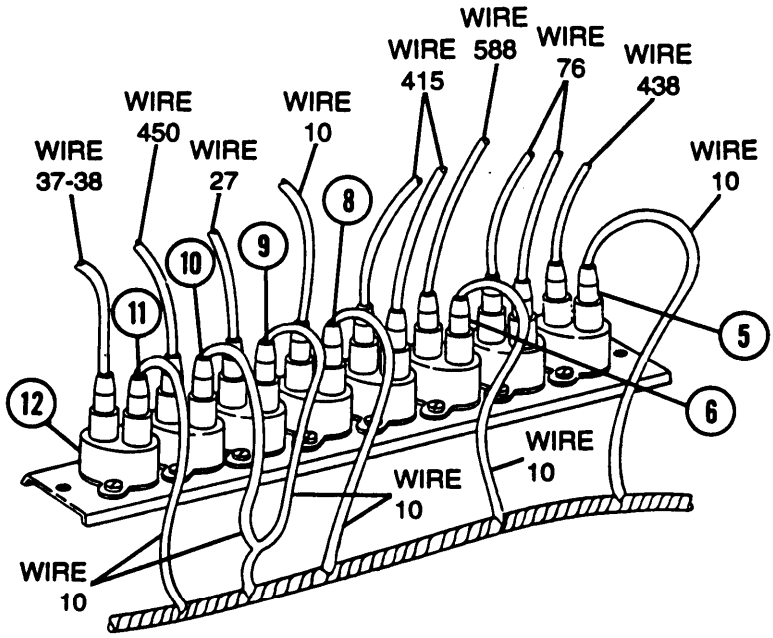


**NOTE**

FOLLOW-ON MAINTENANCE: Install driver’s instrument panel (TM 9-2350-311-20-1)
Connect batteries (TM 9-2350-311-20-1)

## SECTION II. HULL ELECTRICAL COMPONENTS

## 7-15 RECTIFIER (M109A2/M109A3)

This task covers: a. Disassembly b. Inspection and repair c. Assembly

**INITIAL SETUP**

Applicable Configurations
M109A2/M109A3

Tools
General mechanic's tool kit (item 14, Appx C)
Multimeter (item 16, Appx C)
Soldering gun (item 11, Appx C)

Materials/Parts
Acetone solvent (item 1, Appx B)
Electrical tape — black (item 25, Appx B)
Gaskets (2) (item 44, Appx F)
Lockwashers (3) (item 24, Appx F)
Preformed packing (item 49, Appx F)
Pressure-sensitive tape (item 26, Appx B)
Sealing compound (item 19, Appx B)
Silicone compound (item 22, Appx B)
Solder (item 23, Appx B)
Solder flux (item 24, Appx B)

References
TB SIG 222

LEGEND

1 Power diode assembly CR-1
2 Power diode assembly CR-2
3 Power diode assembly CR-3
4 Power diode assembly CR-4
5 Power diode assembly CR-5
6 Power diode assembly CR-6
7 Capacitor C-1
8 Capacitor C-2
9 Capacitor C-3
10 Capacitor C-4
11 Capacitor C-5
12 Capacitor C-6
13 Heat sink terminal
14 Heat sink
15 Capacitor C-7
16 Terminal E-3
17 Terminal E-2
18 Terminal E-1
19 Connector J-1
20 Connector J-2

**NOTE**

Point of symbol indicates direction of conventional current flow. Power diodes consist of two diodes and one terminal.

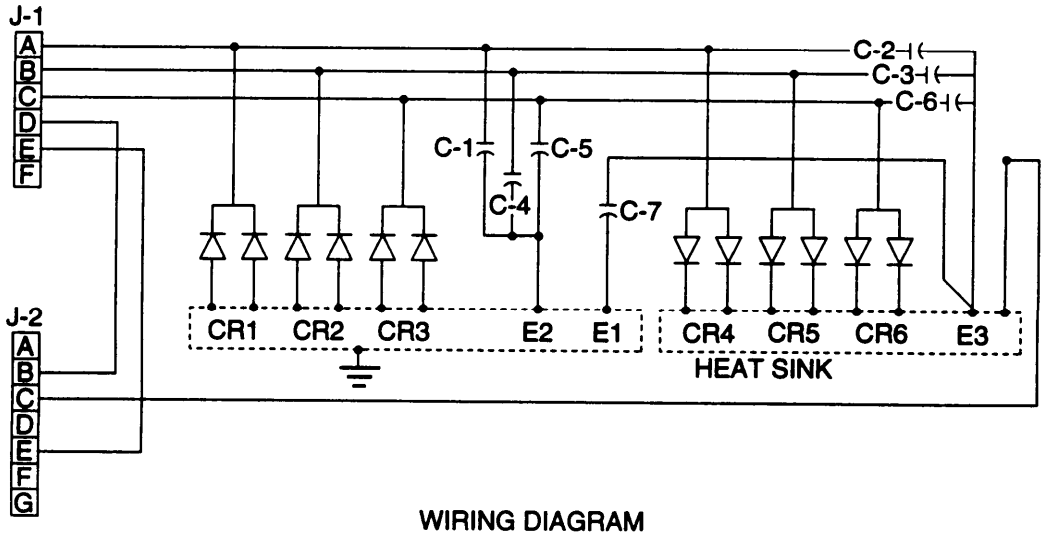


WIRING DIAGRAM

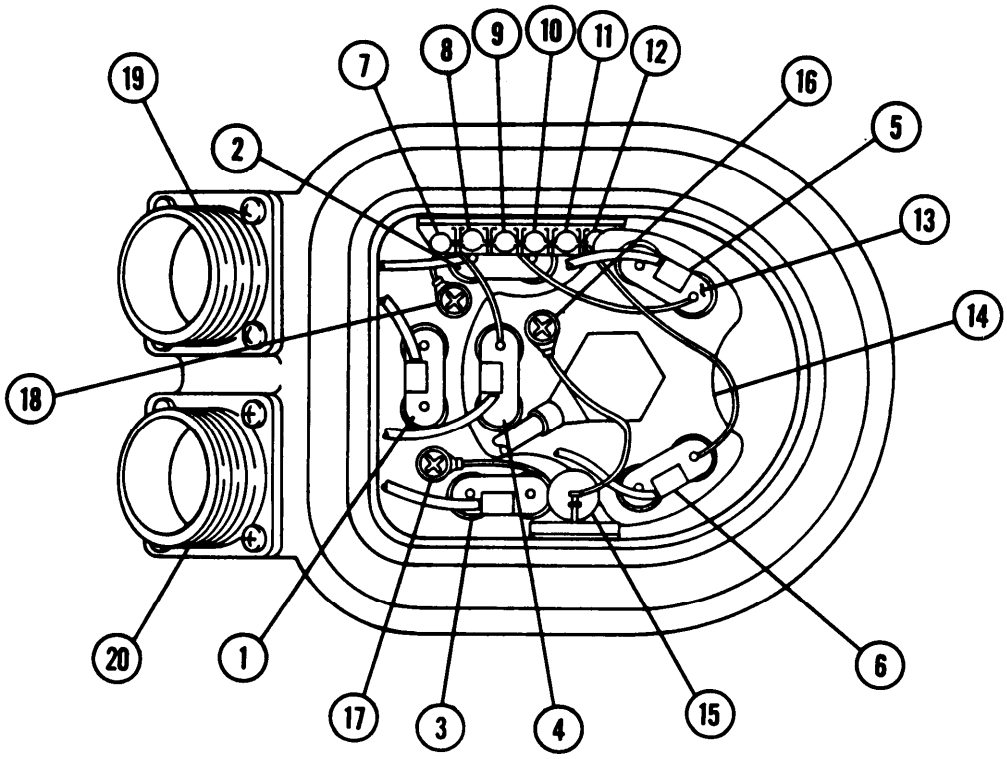

## 7-15 RECTIFIER (MI 09A2/M109A3) — CONTINUED

### a. Disassembly

**NOTE**

Perform electrical tests and disassemble defective components only.

1 Remove six screws (21), six flat washers (22), cover (23), and preformed packing (24). Discard preformed packing.

2 Remove screw (26) and heat sink terminal (13).

3 Remove nut (27) and bushing (28).

4 Remove screw (29), lockwasher (30), flat washer (31), and lead C-6 and C-7 to E-3 (32) from heat sink (14). Discard lockwasher.

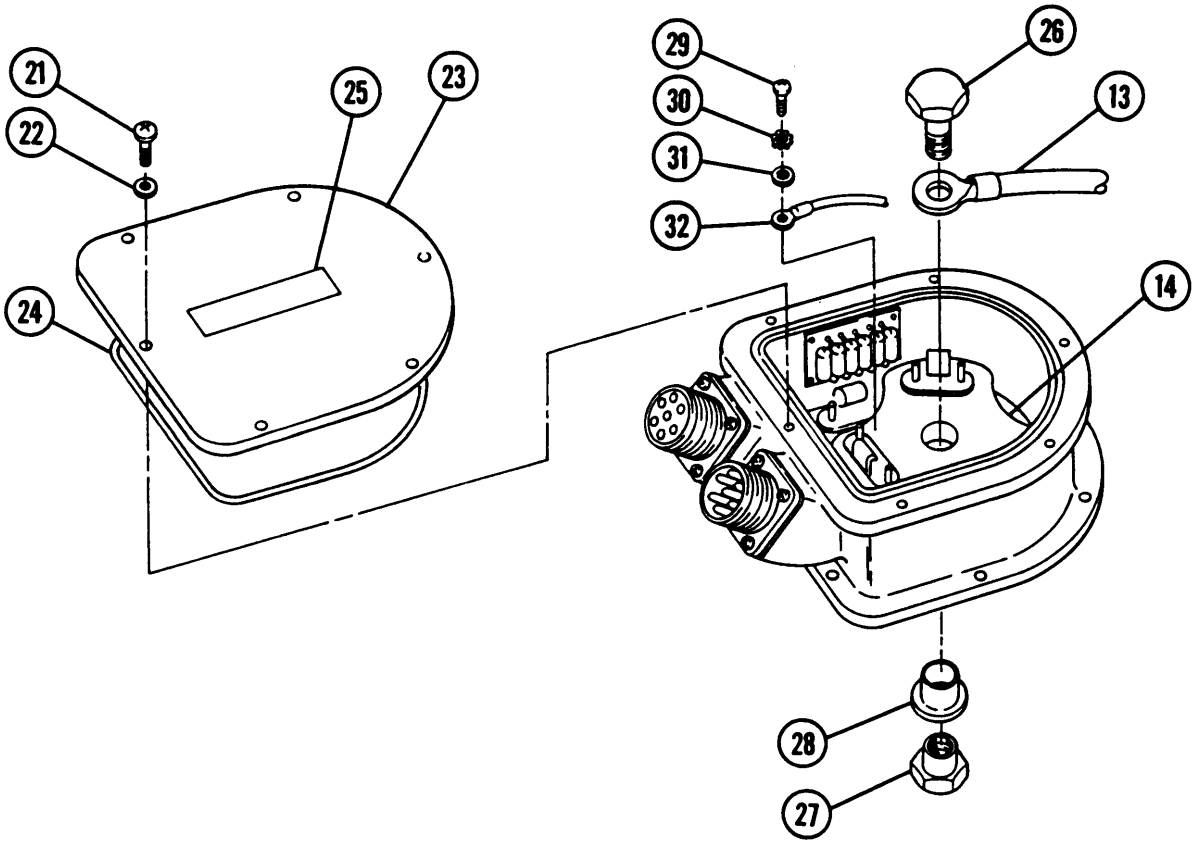

5 Unsolder six electrical leads (33) from six power diode assembly terminals (34 and 35) (TB SIG 222).

6 Unsolder electrical lead C-5 to CR-6 (36) at power diode assembly (37) (TB SIG 222).

7 Unsolder electrical lead C-3 to CR-5 (38) at power diode assembly (39) (TB SIG 222).

8 Unsolder electrical lead C-1 to CR-4 (40) at power diode assembly (41) (TB SIG 222).

9 Remove two screws (42), two lockwashers (43), and two flat washers (44) and release two leads C-7 to E-2 and C-1 to E-1 (45 and 46). Discard lockwashers.

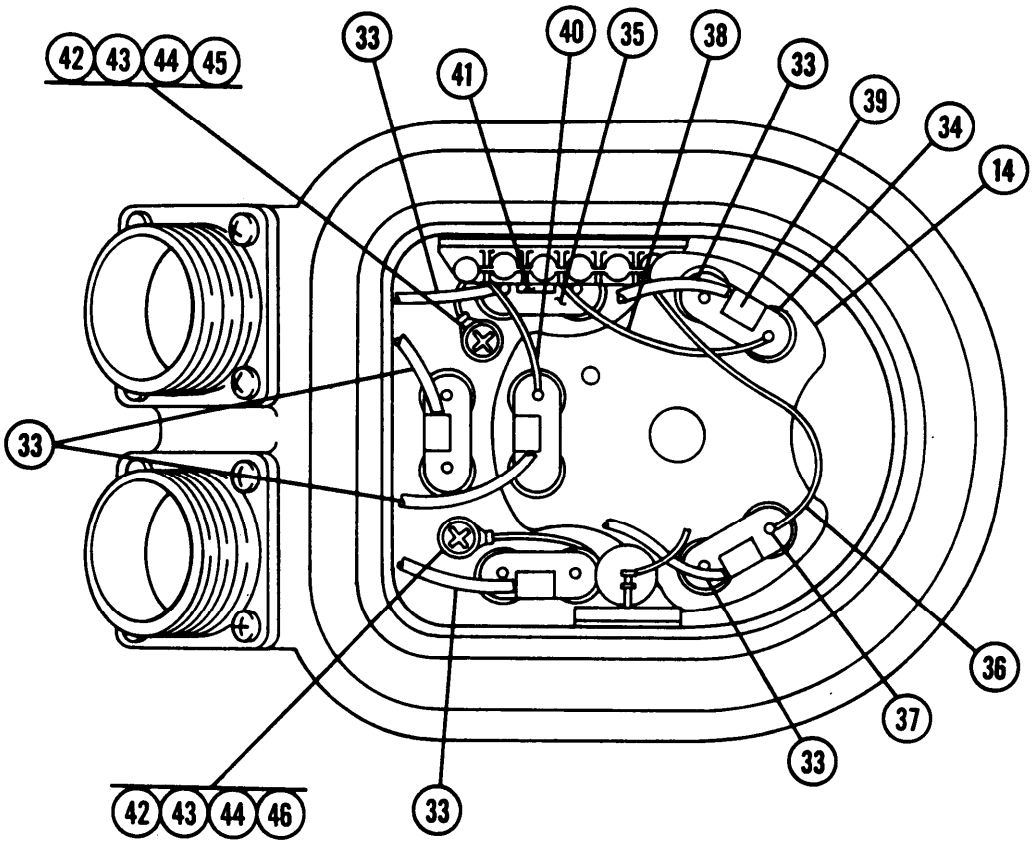

## 7-15 RECTIFIER (M109A2/M109A3) — CONTINUED

**a. Disassembly — Continued**

**NOTE**

There are two power diodes per power diode assembly CR-1 thru CR-6.

10 Remove three terminals (34) and three insulators (47) from three power diodes assemblies (4, 5, and 6). Unsolder at diode poles to remove terminals (TB SIG 222).

11 Remove three terminals (35) and three insulators (46) from three power diode assemblies (1, 2, and 3). Unsolder at diode poles to remove terminals (TB SIG 222).

12 Unscrew six power diodes (49) from heat sink (14).

13 Unscrew six power diodes (50).

14 Remove heat sink (14), three insulators (51), and six pins (52).

15 Unsolder two electrical leads (53) (wire 1 on pin B and wire 3 on pin E) from connector J-2 (20) (TB SIG 222).

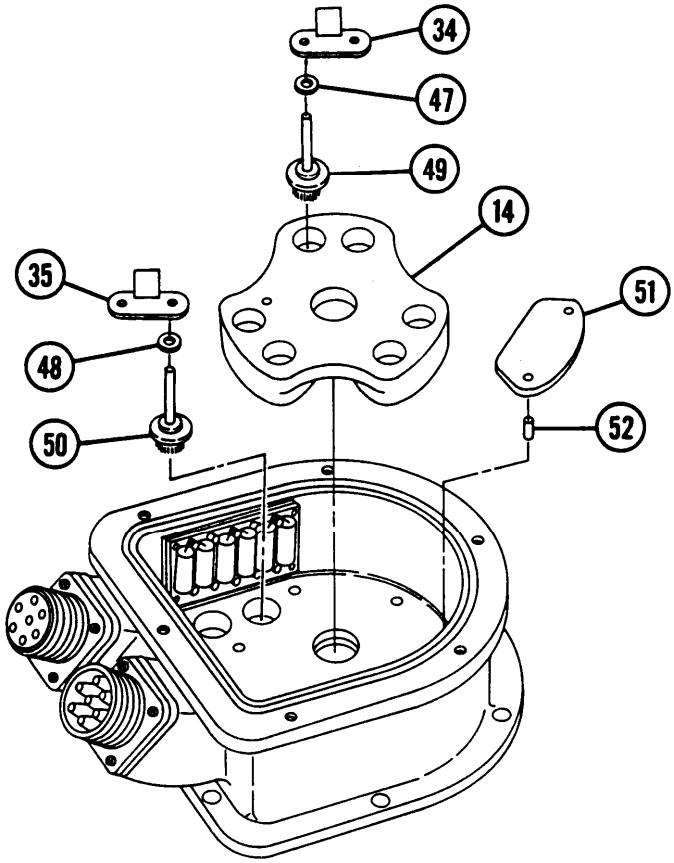

16 Remove eight screws (54), connector J-2 (20), connector J-1 (19), and two gaskets (55). Discard gaskets.

**NOTE**

Capacitor board is held to housing with adhesive. Capacitor board and six capacitors are issued as an assembly.

17 Remove capacitor board (56) and six capacitors (57) from housing (58).

**NOTE**

Capacitor board is held to housing with adhesive. Capacitor board and capacitor C-7 are issued as an assembly.

18 Remove capacitor board (59) with capacitor C-7 (15).

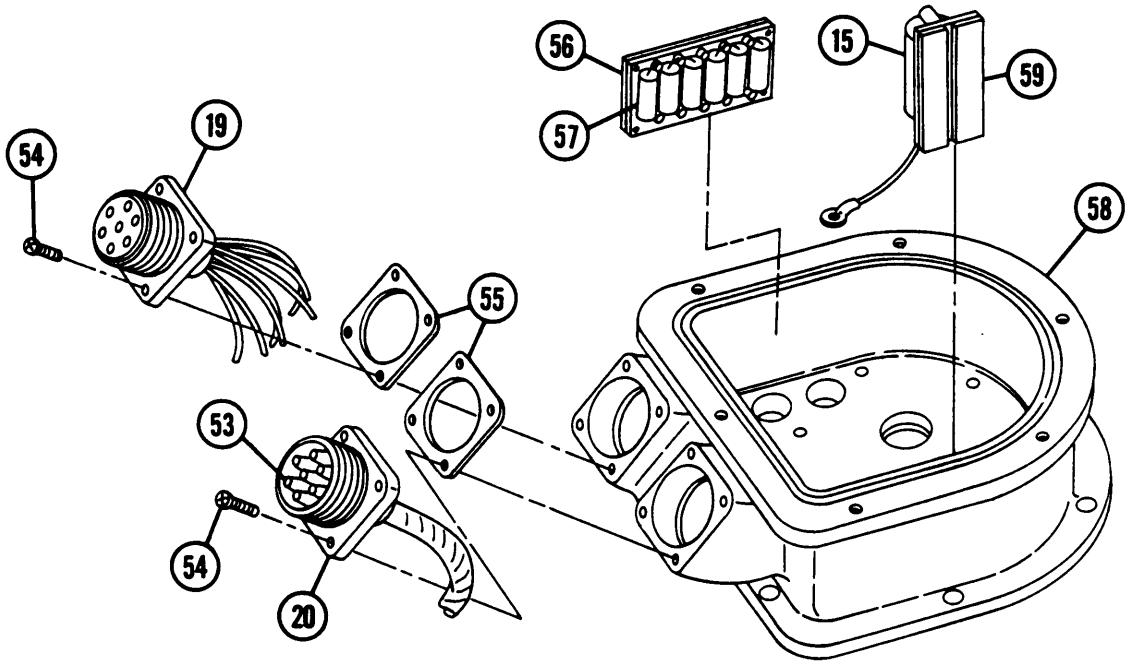

## 7-15 RECTIFIER (MI 09A2/M109A3) — CONTINUED

**b. Inspection and Repair**

1 Inspect cover (23). Replace if cracked or distorted. Replace decal if missing or damaged.

2 Inspect heat sink (14). Replace if cracked or distorted.

3 Inspect three insulators (51). Replace if cracked or distorted.

4 Inspect six pins (52). Replace if burred or broken.

5 Inspect housing (56). Replace if cracked or distorted.

6 Inspect six terminals (34 and 35). Replace if cracked or broken.

7 Test 12 diodes (49 and 50) for 3 ohms conductive direction (para 3-3). Replace if defective (nonconductive direction).

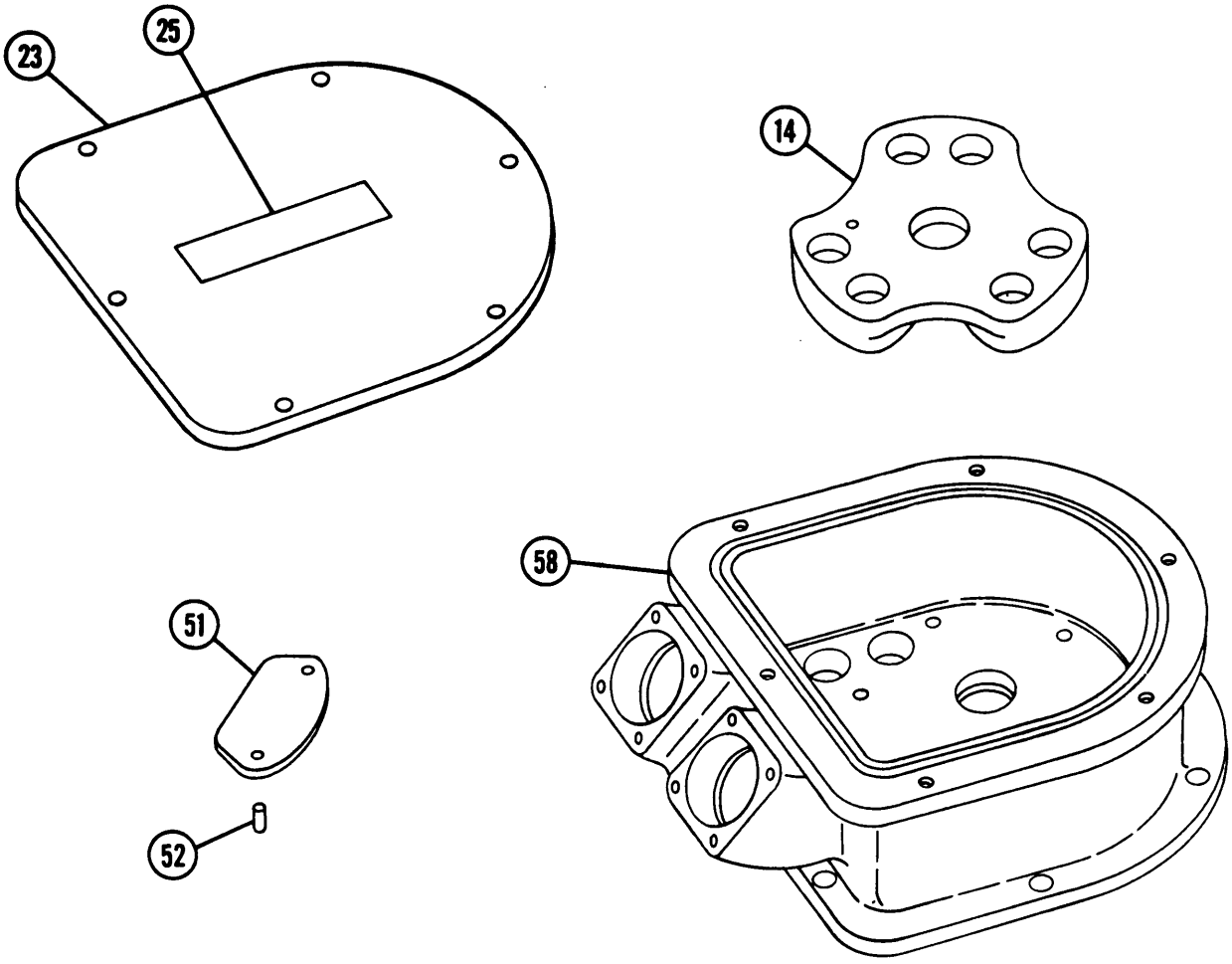

8 Inspect two connectors (19 and 20). Replace if pins are broken. Solder leads if loose (TB SIG 222).

9 Inspect two capacitor boards (56 and 59). Replace if boards are cracked or broken. Check for loose or missing terminals. Replace as required.

10 Test six capacitors (7 thru 12) for 0.01 MF ± 10%. Replace capacitor assembly if defective.

11 Test capacitor C-7 (15) for 3.0 MF ± 10%. Replace capacitor assembly if defective.

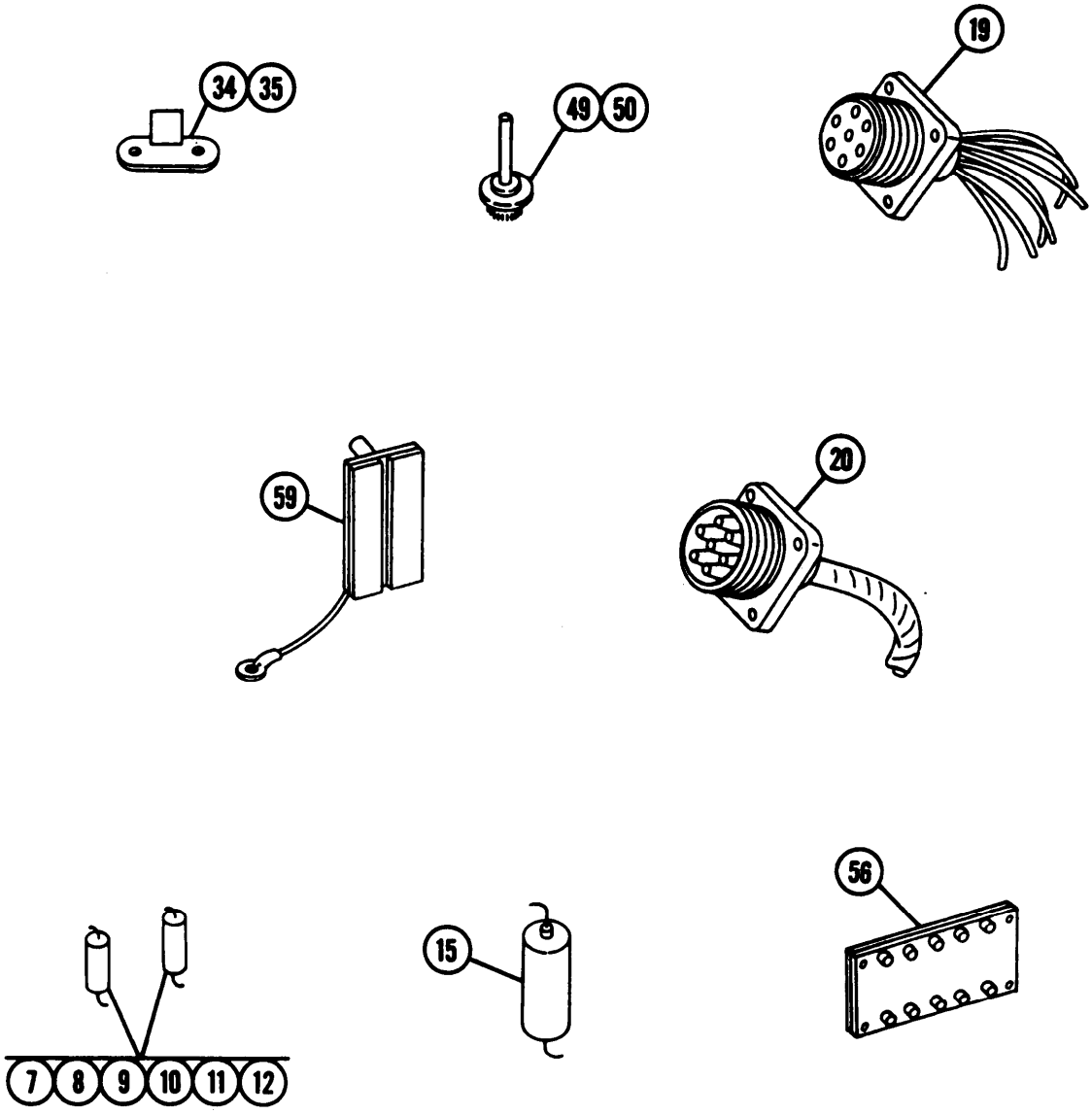

## 7-15 RECTIFIER (M109A2/M109A3) — CONTINUED

**c. Assembly**

1 Install two new gaskets (55), two connectors (19 and 20), and eight screws (54) to housing (58).

2 Solder two electrical leads (53) (wire 1 on pin B and wire 3 on pin E) to connector J-2 (20) (TB SIG 222).

3 Install six pins (52), three insulators (51), and heat sink (14) to housing (58). Apply coating of silicone compound to mating surfaces of diodes.

4 Install six power diodes (50) and six insulators (48) to housing (58). Install six power diodes (49) and six insulators (47) to heat sink (14).

5 Solder 6 terminals (34 and 35) to 12 power diodes (49 and 50). Apply coating of silicone compound to mating surfaces of diodes.

6 Install lead C-6 and C-7 to E-3 (32), flat washer (31), new lockwasher (30), and screw (29) to heat sink (14).

7 Install bushing (28), nut (27), heat sink terminal lead (13), and screw (26). Apply coating of silicone compound to diode mating surfaces.

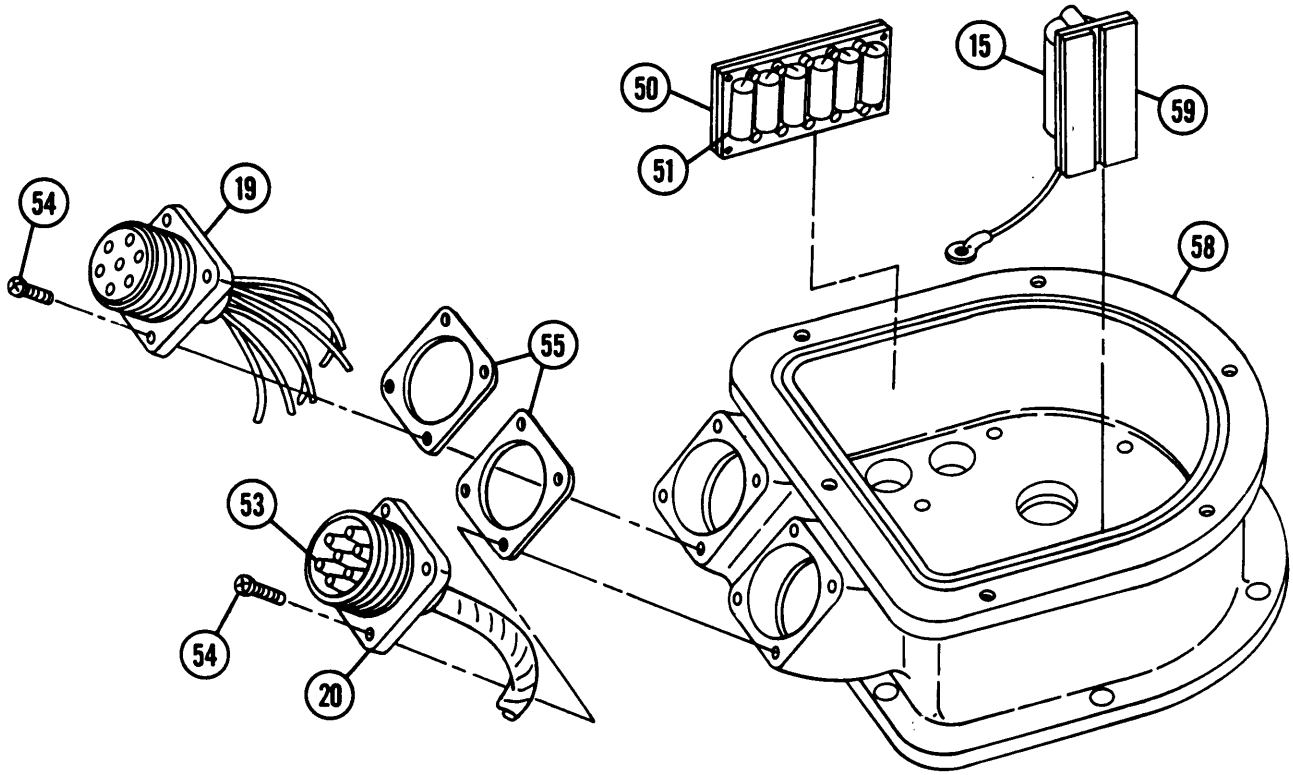

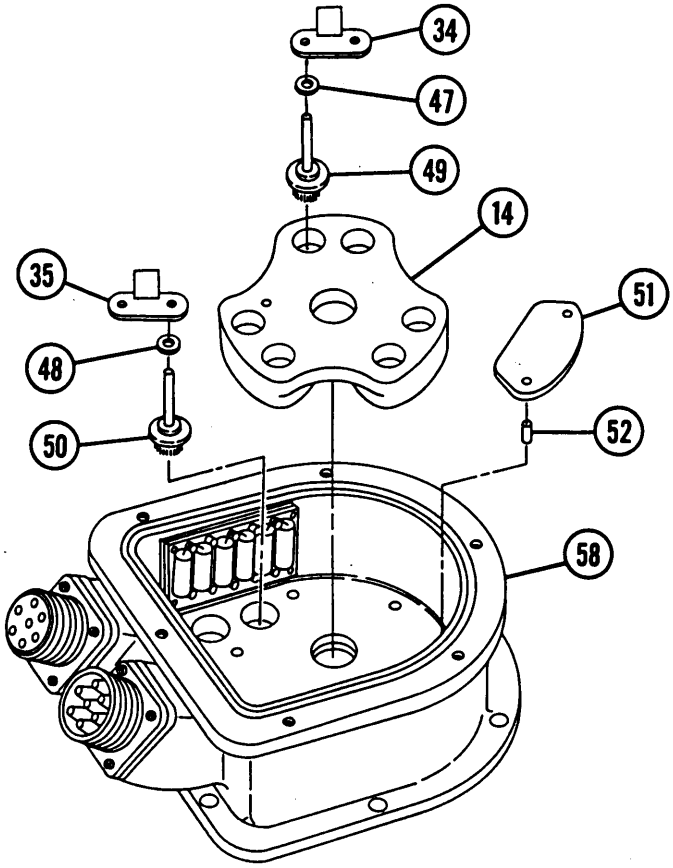
34
47
49
14
35
51
48
52
50
58

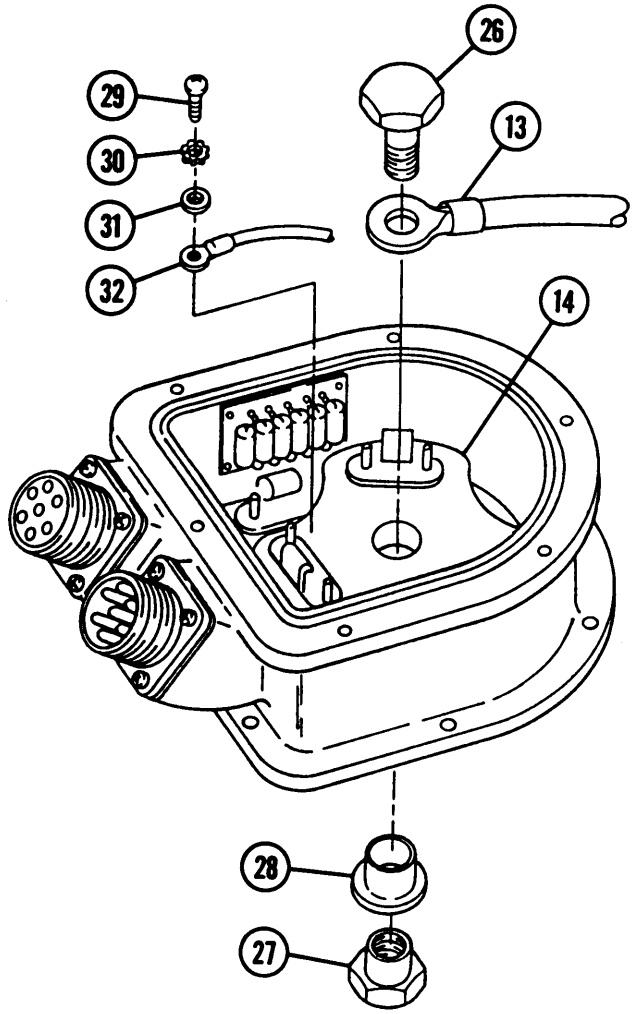
26
29
13
30
31
32
14
28
27

## 7-15 RECTIFIER (M109A2/M109A3) — CONTINUED

**c. Assembly — Continued**

8 Solder electrical leads to connection points except capacitor board assemblies (50 and 53).

**WARNING**

Acetone solvent is toxic and flammable. Use only in well-ventilated area. Do not breathe vapors. Do not use near open flame or excessive heat. Failure to heed warning could cause serious injury or death.

9 Clean mounting surfaces with acetone solvent and install capacitor board assemblies (57 and 60) using pressure-sensitive tape.

10 Solder electrical leads to connection points (TB SIG 222).

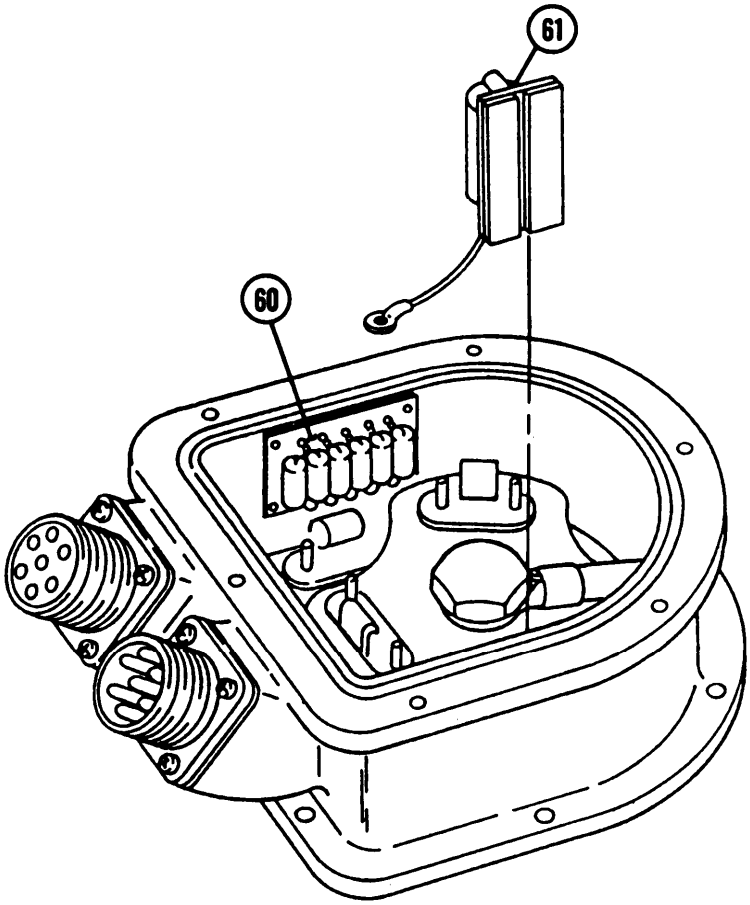

11 Apply sealing compound to six screws (21) and six flat washers (22). Install new preformed packing (24), cover (23), six screws, and six flat washers.

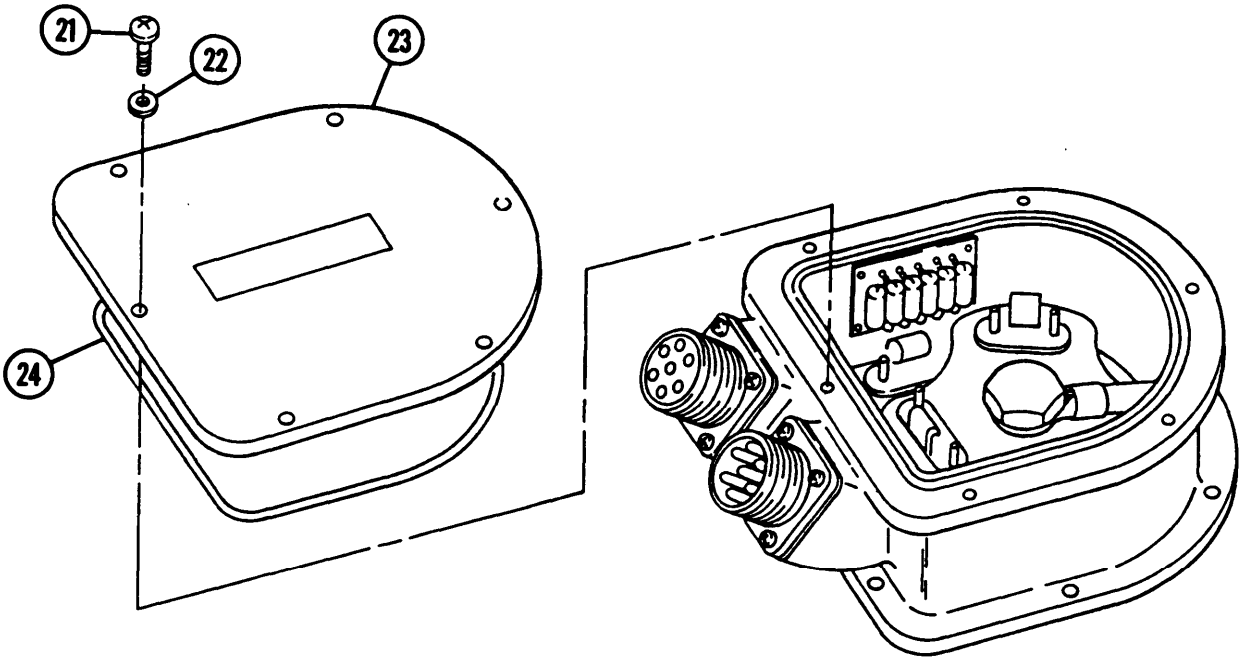


## 7-16 RECTIFIER (M109A4/M109A5)

This task covers: a. Removal b. Inspection and Repair c. Assembly

### INITIAL SETUP

**Applicable Configurations**
M109A4/M109A5

**Tools**
General mechanic's tool kit (item 14, Appx C)
Multimeter (item 16, Appx C)
Socket wrench set (item 20, Appx C)
Soldering gun (item 11, Appx C)
Torque wrench (item 28, Appx C)

**Materials/Parts**
Acetone solvent (item 1, Appx B)
Electrical tape — black (item 25, Appx B)
Gaskets (2) (item 45, Appx F)
Lockwashers (3) (item 27, Appx F)
Lockwashers (6) (item 28, Appx F)
Preformed packing (item 50, Appx F)
Pressure-sensitive tape (item 26, Appx B)
Sealing compound (item 20, Appx B)
Silicone compound (item 21, Appx B)
Solder (item 23, Appx B)
Solder flux (item 24, Appx B)

**References**
TB SIG 222
TM 9-2350-311-20-1

## 7-16 RECTIFIER (MI 09A4/M109A5) — CONTINUED

LEGEND

1 Diode assembly CR-1 and CR-4
2 Diode assembly CR-2 and CR-5
3 Diode assembly CR-3 and CR-6
4 Capacitor C-1
5 Capacitor C-2
6 Capacitor C-3
7 Capacitor C-4
8 Capacitor C-5
9 Capacitor C-6
10 Capacitor C-7
11 Positive heat sink terminal
12 Negative bus bar
13 Positive bus bar
14 Connector J-1
15 Connector J-2

**NOTE**

Point of symbol indicates direction of conventional current flow. Diode assemblies consist of two diodes.

**a. Disassembly**

**NOTE**

Perform electrical tests and disassemble defective components only.

1 Remove eight screws (16), eight flat washers (17), cover (18), and preformed packing (19). Discard preformed packing.

2 Remove nut (20), lockwasher (21), flat washer (22), five leads (23), and flat washer (24). Discard lockwasher.

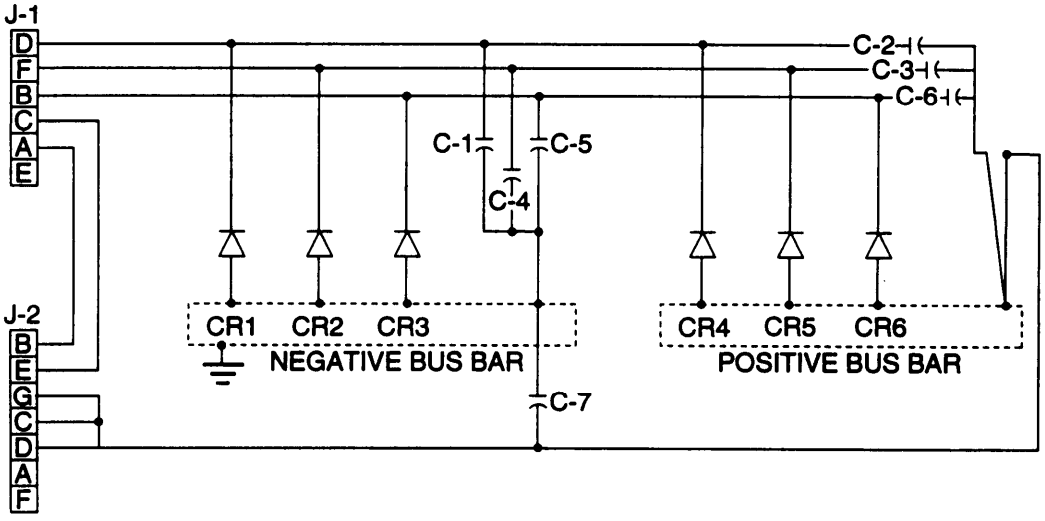


WIRING DIAGRAM

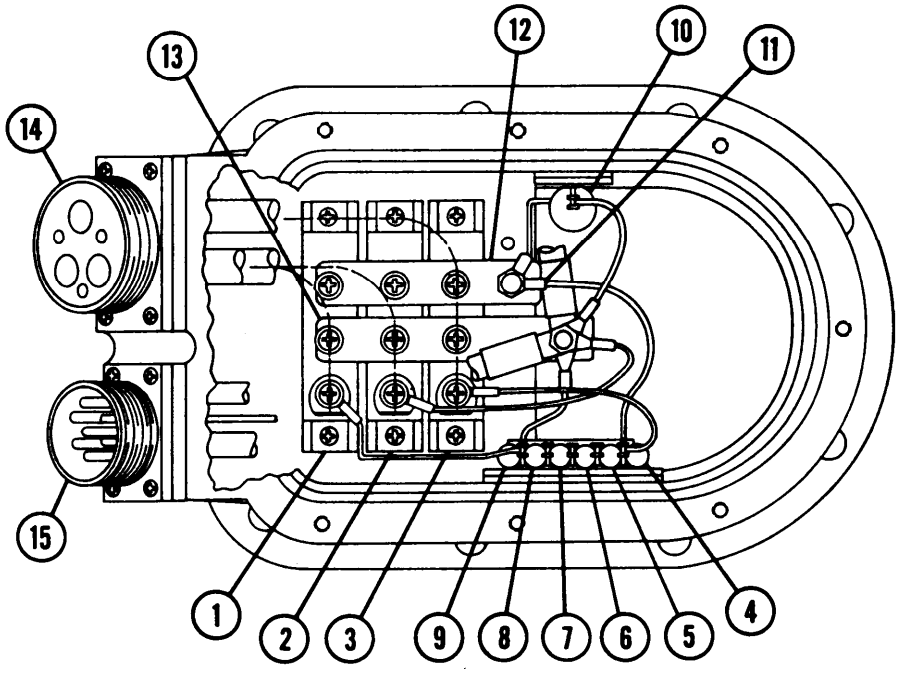
13
12
10
11
14
15
1
2
3
9
8
7
6
5
4

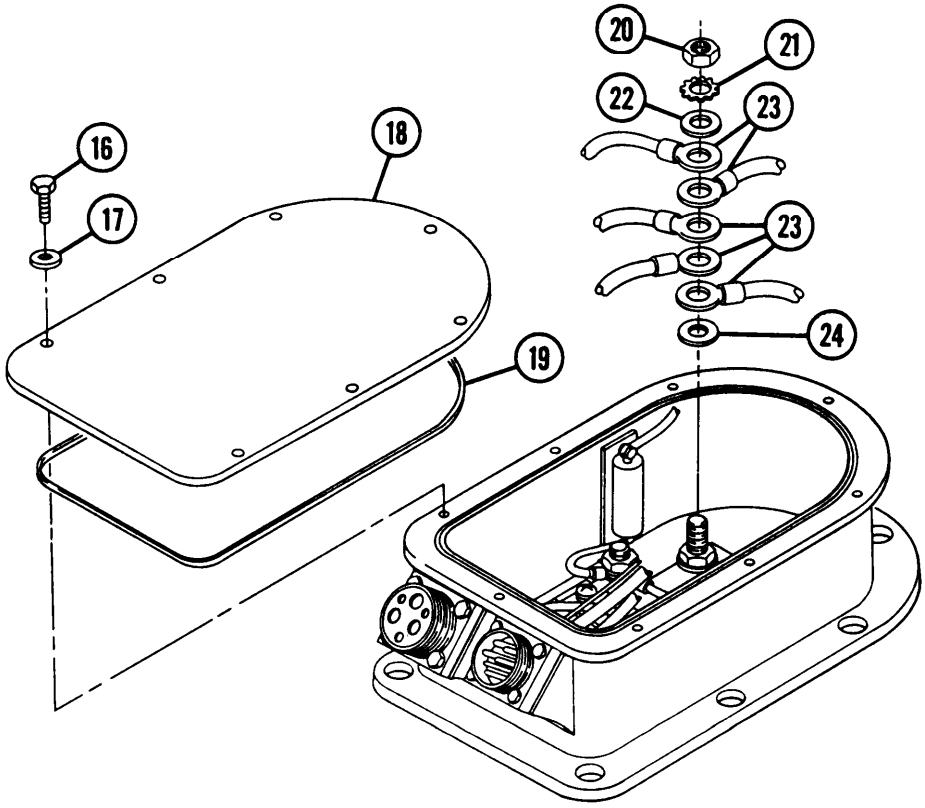
20
21
22
23
16
18
17
23
24
19

## 7-16 RECTIFIER (M109A4/M109A5) — CONTINUED

**a. Disassembly — Continued**

**NOTE**

When removing more than one wire from receptacle, tag wires for future identification.

3 Remove four screws (25), gasket (26), and connector J2 (15). Discard gasket.

4 Disconnect two wire leads 4 and 5 (27) from connector J2 (15).

5 Remove three screws (28), three washers (29), three lockwashers (30), and six leads (31). Discard lockwashers.

6 Remove four screws (32), gasket (33), and connector J1 (14). Discard gasket.

7 Remove five leads (34) from connector J1 (14) and three leads (35) from connector J2 (15) as required.

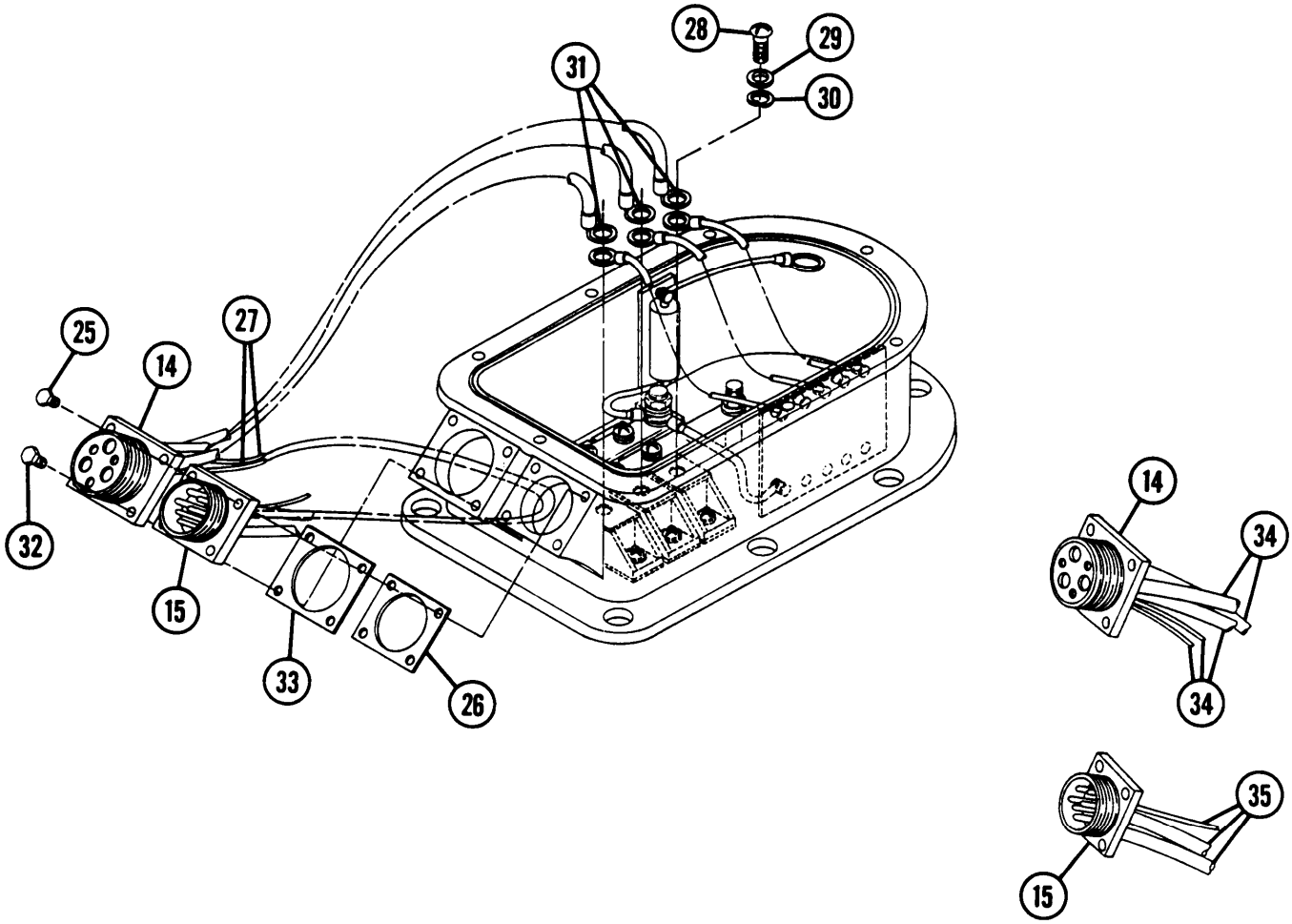

8 Remove nut (36) and lockwasher (37) from ground terminal (38) and disconnect two wire leads (39). Discard lockwasher.

9 Remove three screws (40), three washers (41), three lockwashers (42), and negative bus bar (12). Discard lockwashers.

10 Remove two washers (43), two lockwashers (44), two nuts (45), and ground terminal (38).

11 Remove three screws (46), three washers (47), three lockwashers (48), and positive bus bar (13). Discard lockwashers.

12 Remove nut (49), flat washer (50), screw (51), and lockwasher (52). Discard lockwasher.

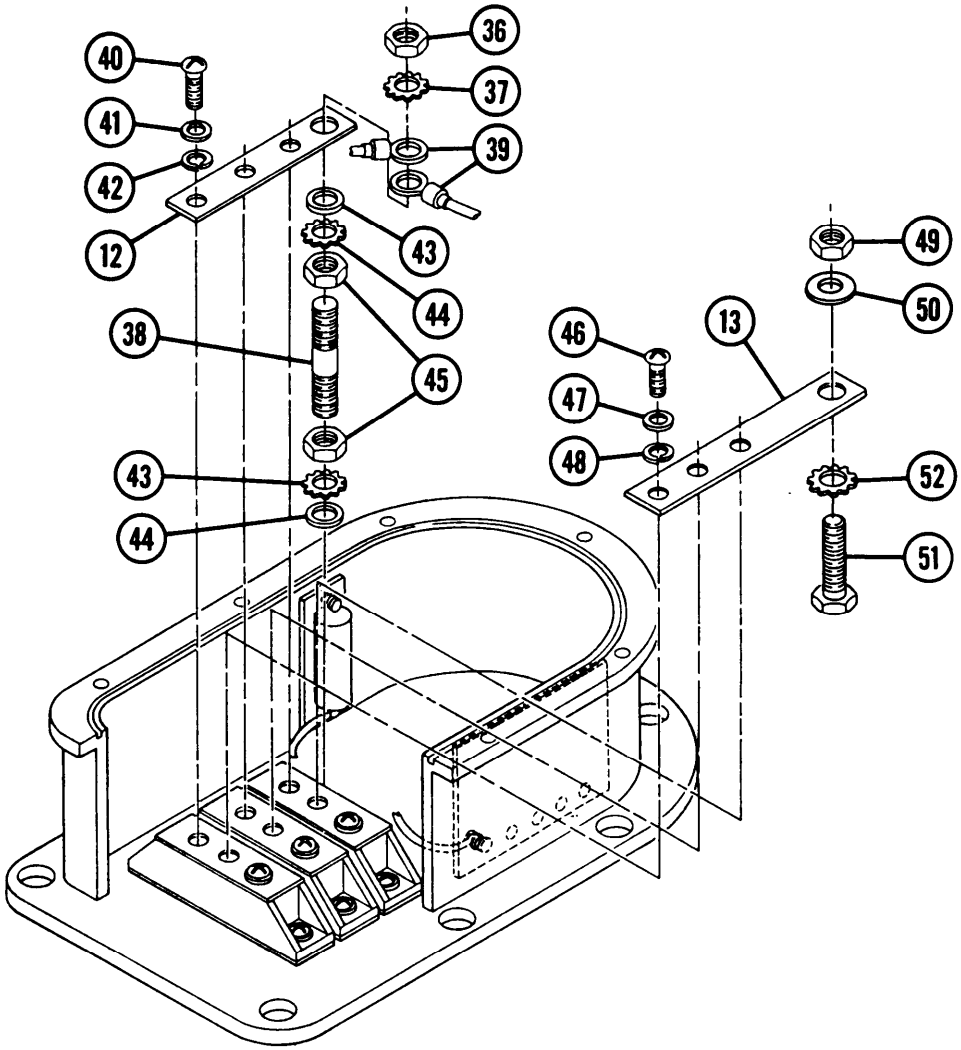

## 7-16 RECTIFIER (M109A4/M109A5) — CONTINUED

**a. Disassembly — Continued**

13 Remove six screws (53), six lockwashers (54), and three diode assemblies (1, 2, and 3). Discard lockwashers.

**NOTE**

Capacitor boards are secured to housing with pressure-sensitive tape. Remove only if necessary.

14 Remove capacitor board (55) from housing (56).

15 Unsolder three electrical leads (57) from capacitor board (55) (TB SIG 222).

16 Unsolder lead (58) from capacitor board (59) (TB SIG 222).

17 Disassemble all rectifier electrical leads as required (TM 9-2350-311-20-1).

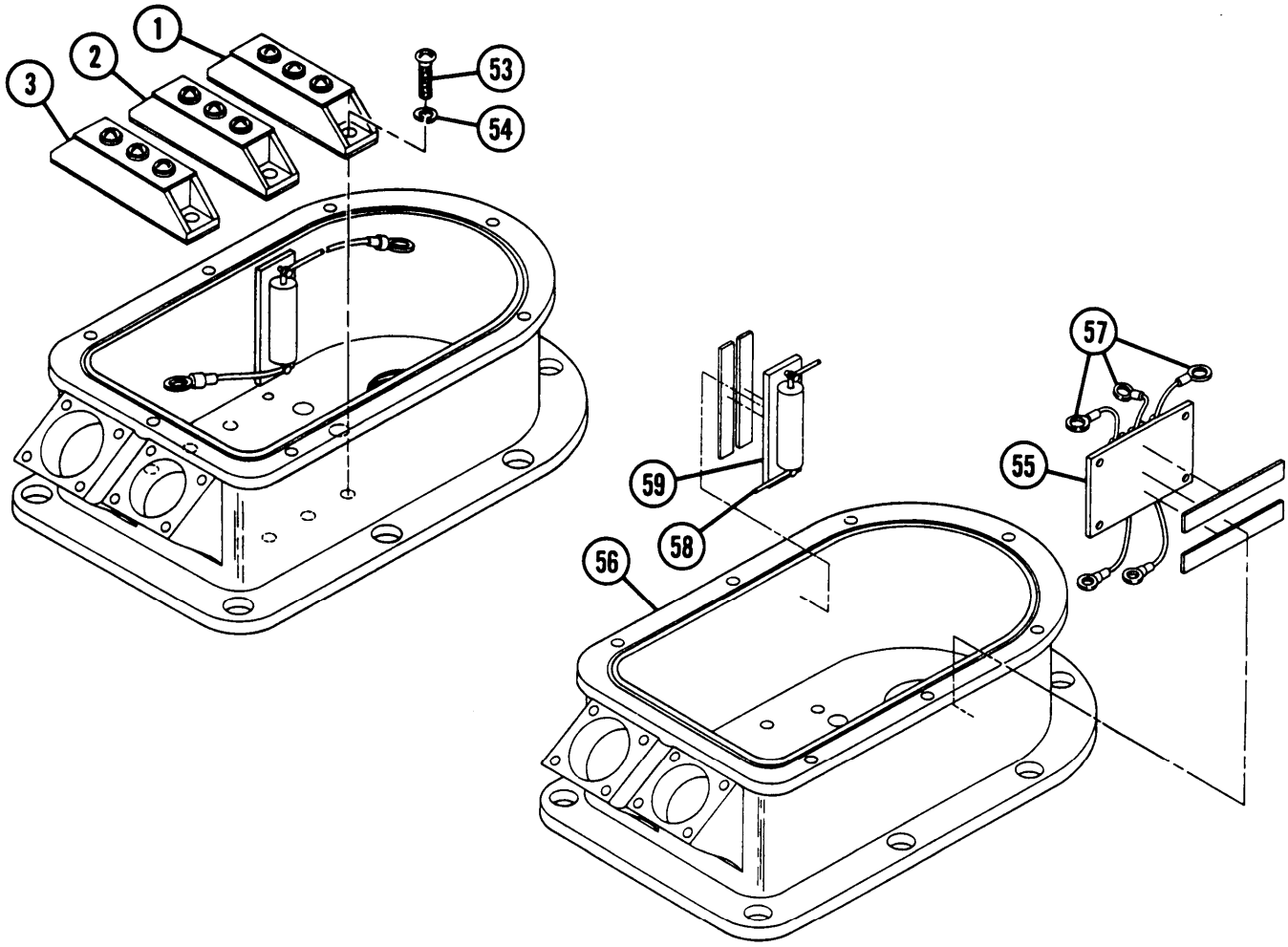

**b. Inspection and Repair**

1 Inspect cover (18). Replace if cracked or distorted.

2 Inspect housing (56). Replace if cracked or distorted.

3 Test three diode assemblies (1, 2, and 3) for continuity (para 3-3). Replace if defective.

4 Inspect two connectors (14 and 15). Replace if pins are broken. Resolder leads if loose (TB SIG 222).

5 Inspect capacitor boards (55 and 59). Replace if boards are cracked or broken. Check for loose or missing terminals. Replace as required.

6 Test capacitor (4) with red lead of multimeter on one capacitor terminal and black lead of multimeter on other capacitor terminal. Multimeter should show continuity, then infinity (∞). If only continuity is shown, replace capacitor assembly.

7 Reverse multimeter leads on capacitor (4) and repeat step 6.

8 Repeat test procedure (steps 6 and 7) for capacitors (5 thru 9) and capacitor C-7 (10).

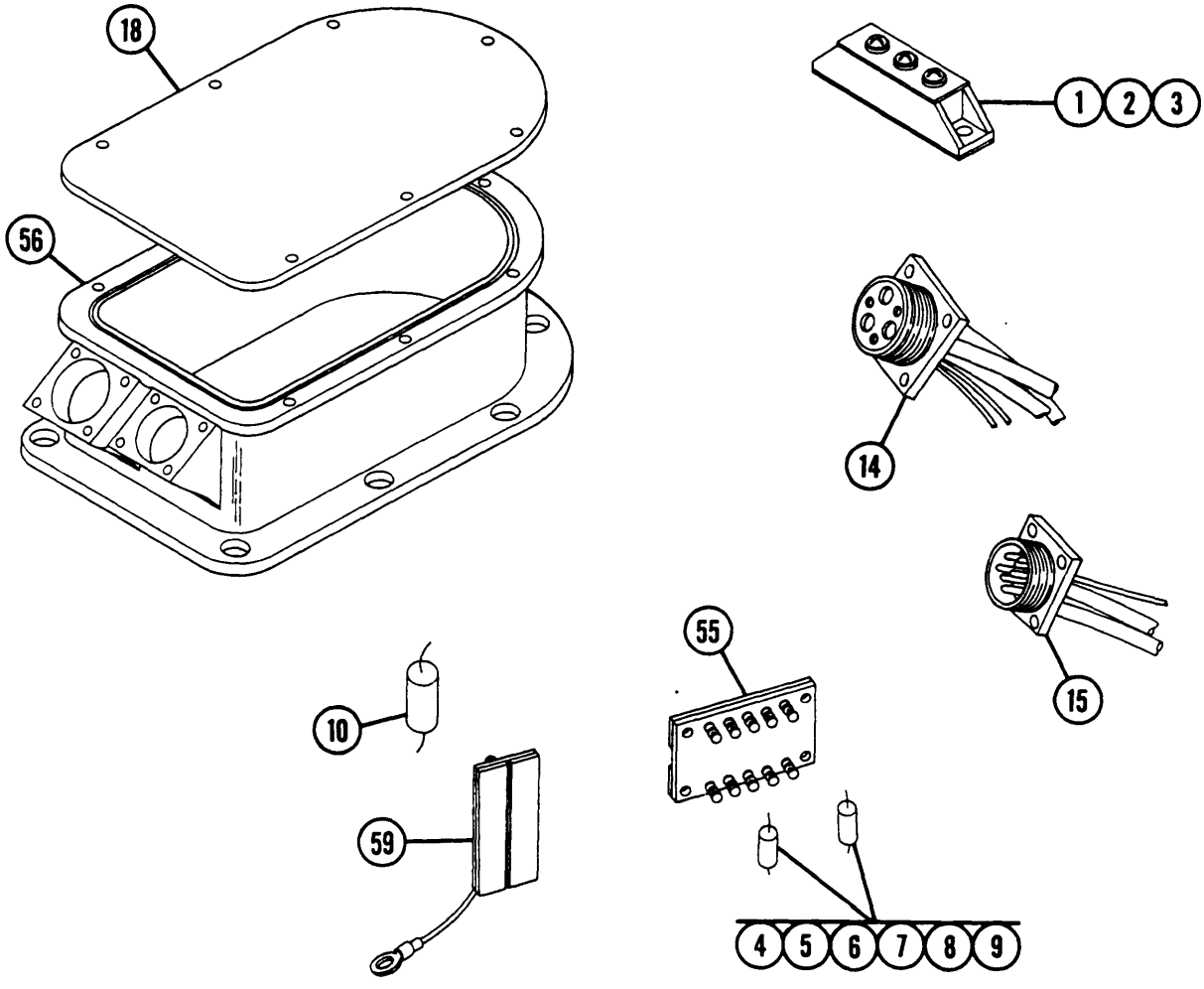

## 7-16 RECTIFIER (M109A4/M109A5) — CONTINUED

### c. Assembly

LEGEND

1 Diode assembly CR-1 and CR-4
2 Diode assembly CR-2 and CR-5
3 Diode assembly CR-3 and CR-6
4 Capacitor C-1
5 Capacitor C-2
6 Capacitor C-3
7 Capacitor C4
8 Capacitor C-5
9 Capacitor C-6
10 Capacitor C-7
11 Positive heat sink terminal
12 Negative bus bar
13 Positive bus bar
14 Connector J-1
15 Connector J-2

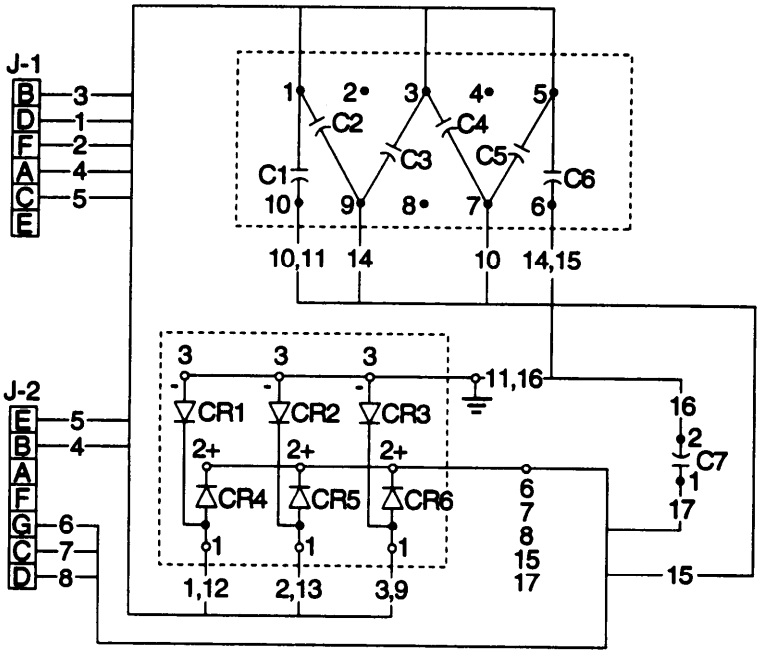

1 Assemble electrical leads as required (TM 9-2350-311-20-1).

**NOTE**

Refer to electrical wiring diagram for installation of leads.

2 Solder lead (56) to capacitor board (59) (TB SIG 222).

3 Solder three leads (57) to capacitor board (55) (TB SIG 222).

**WARNING**

Acetone solvent is toxic and flammable. Use only in well-ventilated area. Do not breathe vapors. Do not use near open flame or excesive heat. Failure to heed warning could cause serious injury or even death.

**NOTE**

Step 4 applies only if capacitor boards (55 and 59) are used.

4 Clean two capacitor boards (55 and 59) with acetone solvent to remove remains of pressure-sensitive tape.

5 Install two strips of pressure-sensitive tape to each capacitor board (55 and 59). Do not remove protective coating.

6 Clean housing (56) mounting surface with acetone solvent.

7 Remove protective coating on tape and install two capacitor boards (55 and 59) as shown below.

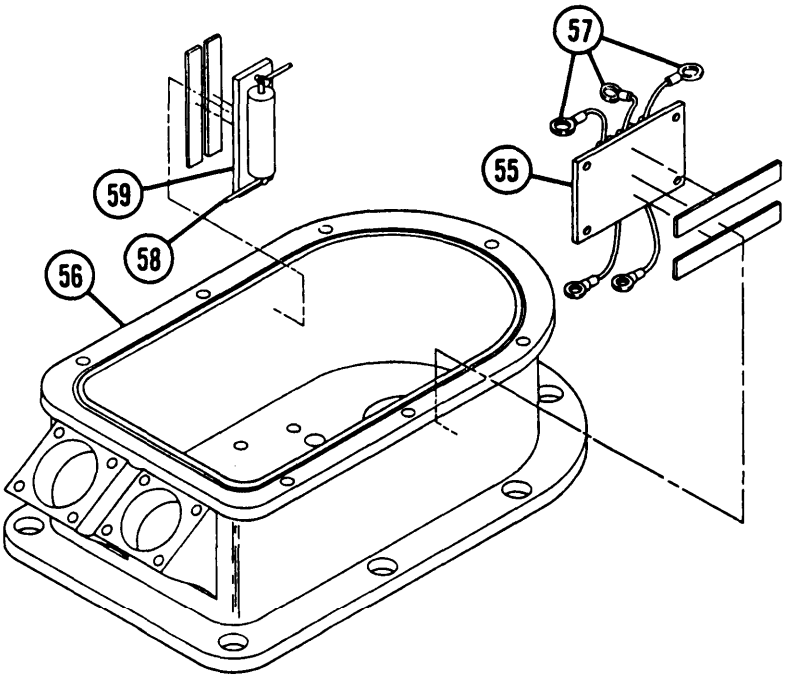

## 7-16 RECTIFIER (M109A4/M109A5) — CONTINUED

**c. Assembly — Continued**

8 Apply coating of silicone compound to mating surfaces and install three diode assemblies (1, 2, and 3), six new lookwashers (54), and six screws (53). Torque screws to 20-23 lb-in. (2.3-2.6 N-m)

9 Install two nuts (45), two new lockwashers (44), and two washers (43) to ground terminal (38).

10 Install ground terminal (38) and secure by tightening bottom nut (45). Do not tighten top nut (45).

11 Install negative and positive bus bars (12 and 13), six new lockwashers (42 and 48), six flat washers (41 and 47), and six screws (40 and 46). Torque screws to 20-30 lb-in. (2.3-2.6 N-m).

12 Install new lockwasher (52), flat washer (50), screw (51), and nut (49) on positive bus bar (13).

13 Install two leads (39), new lockwasher (37), and nut (36) at ground terminal (38). Tighten nut (36) and top nut (45) against negative bus bar (12) to secure contact.

14 Install three leads (35) to connector J2 (15) and five leads (34) to connector J1 (14).

15 Apply sealing compound to threads of eight screws (25 and 32).

16 Install connector J1 (14), new gasket (33), and four screws (32).

17 Connect two wire leads 4 and 5 (27) to connector J2 (15).

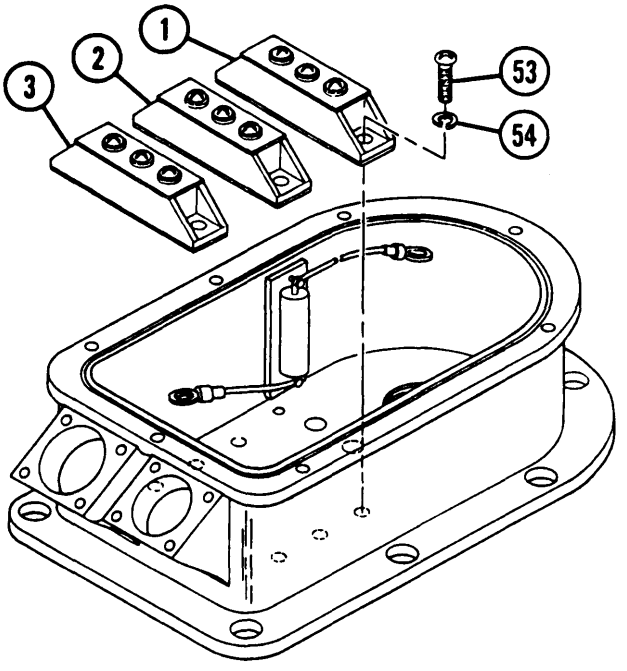

18 Install connector J2 (15), new gasket (26), and four screws (25).

19 Bend terminals of three leads 1, 2, and 3 (31 ) to 90°.

20 Install six leads (31), three screws (28), three flat washers (29), and three new lockwashers (30).

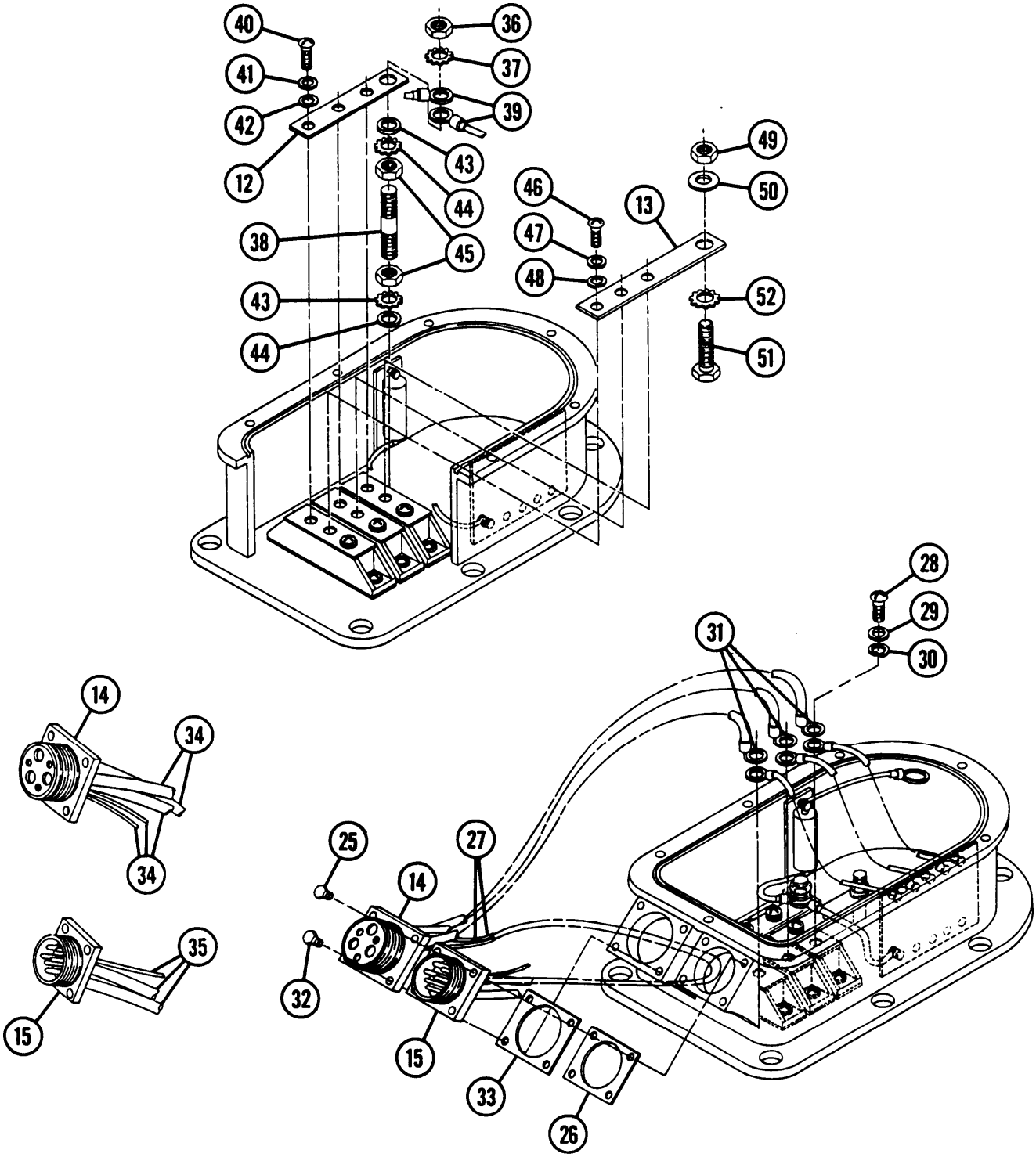

## 7-16 RECTIFIER (M109A4/M109A5) — CONTINUED

**c. Assembly — Continued**

21 Connect two wire leads (23) to two connectors (14 and 15).

22 Install flat washer (22), five leads (23), flat washer (22), new lockwasher (21 ), and nut (20) to screw (60).

23 Install new preformed packing (19), cover (18), eight flat washers (17), and eight screws (16).

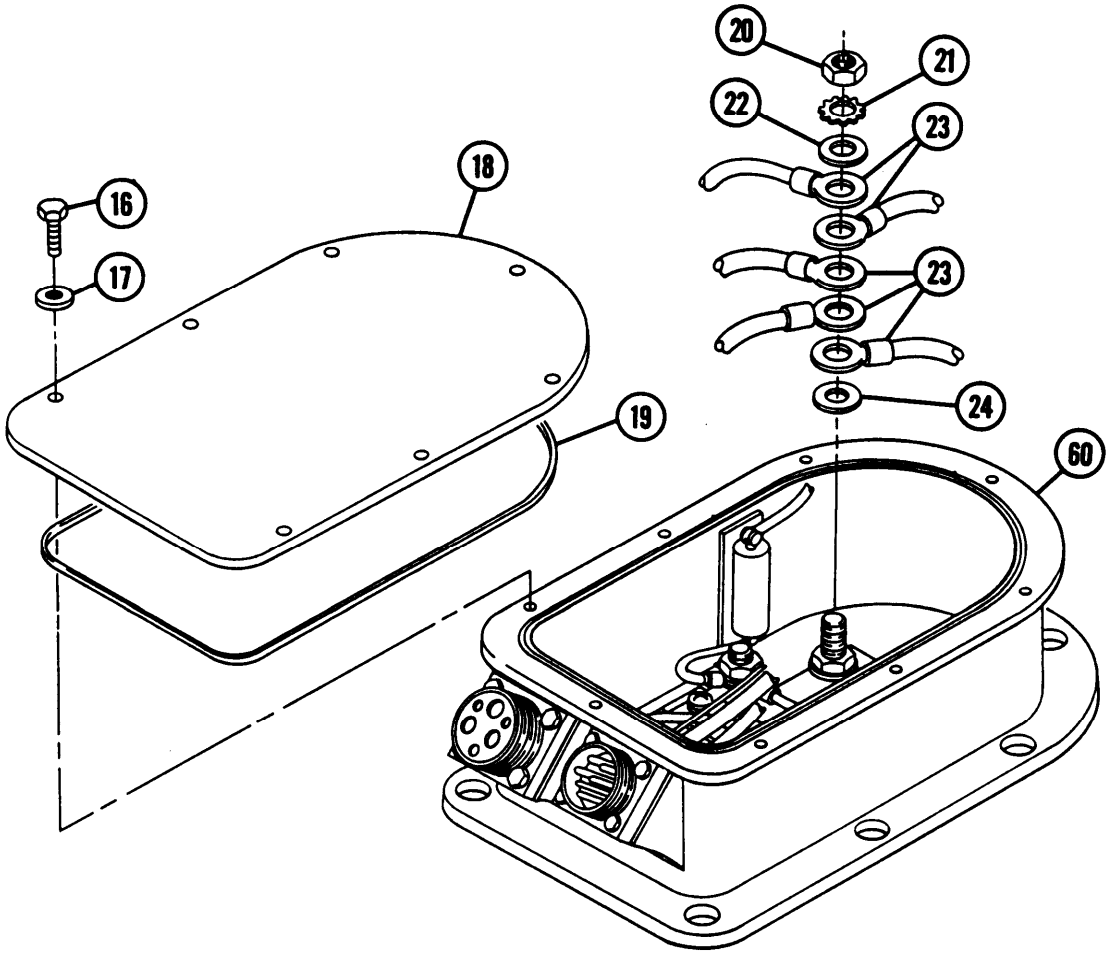

# CHAPTER 8
# FINAL DRIVE AND TRACK SUSPENSION

## GENERAL

This chapter describes and illustrates procedures for disassembly and assembly of the final drive assembly and the track suspension.

CONTENTS


| | | PAGE |
|---|---|---|
| Section I | FINAL DRIVE ASSEMBLY | 0-2 |
| 8-1 | FINAL DRIVE ASSEMBLY | 8-2 |
| Section II | TRACK SUSPENSION | 8-6 |
| 8-2 | ROAD WHEEL ARM ASSEMBLY—UPPER SPINDLE | 8-6 |

## SECTION I. FINAL DRIVE ASSEMBLY

## 8-1 FINAL DRIVE ASSEMBLY

This task covers: a. Disassembly b. Assembly

**INITIAL SETUP**

Tools
General mechanic's tool kit (item 14, Appx C)
Fabricated stand (item 2, Appx D)
Torque wrench (item 26, Appx C)
Torque wrench (item 28, Appx C)

Materials/Parts
Cotter pin (item 13, Appx F)
Gasket (item 83, Appx F)
Gasket (item 86, Appx F)
Gasket (item 53, Appx F)
Gaskets (2) (item 54, Appx F)
Grease (item 9, Appx B)
Lockwashers (24) (item 37, Appx F)
Lockwashers (7) (item 39, Appx F)
Seal (item 84, Appx F)
Seal (item 46, Appx F)

Personnel Required
Two

Equipment Conditions
Final drive removed (TM 9-2350-311 -20-1 )

**a. Disassembly**

1 Remove seal (1), 12 screws (2), 12 Iockwashers (3), cover (4), and gasket (5). Discard seal, lockwashers, and gasket.

2 Remove seven screws (6), seven Iockwashers (7), housing cover (8), and gasket (9). Discard Iockwashers and gasket.

3 Remove input splined gearshaft (10) and two bearing races (11 ).

4 Remove two bearing cones (12).

5 Remove cotter pin (13) and nut (14). Discard cotter pin.

6 Remove ring gear (15) and spacer (16).

7 Remove bearing (17).

**NOTE**

Step 8 applies only to leaking final drive housings.

8 Remove four screws (18), four Iockwashers (19), input shaft cover (20), and gasket (21 ) from final drive housing (22). Discard lockwashers and gasket.

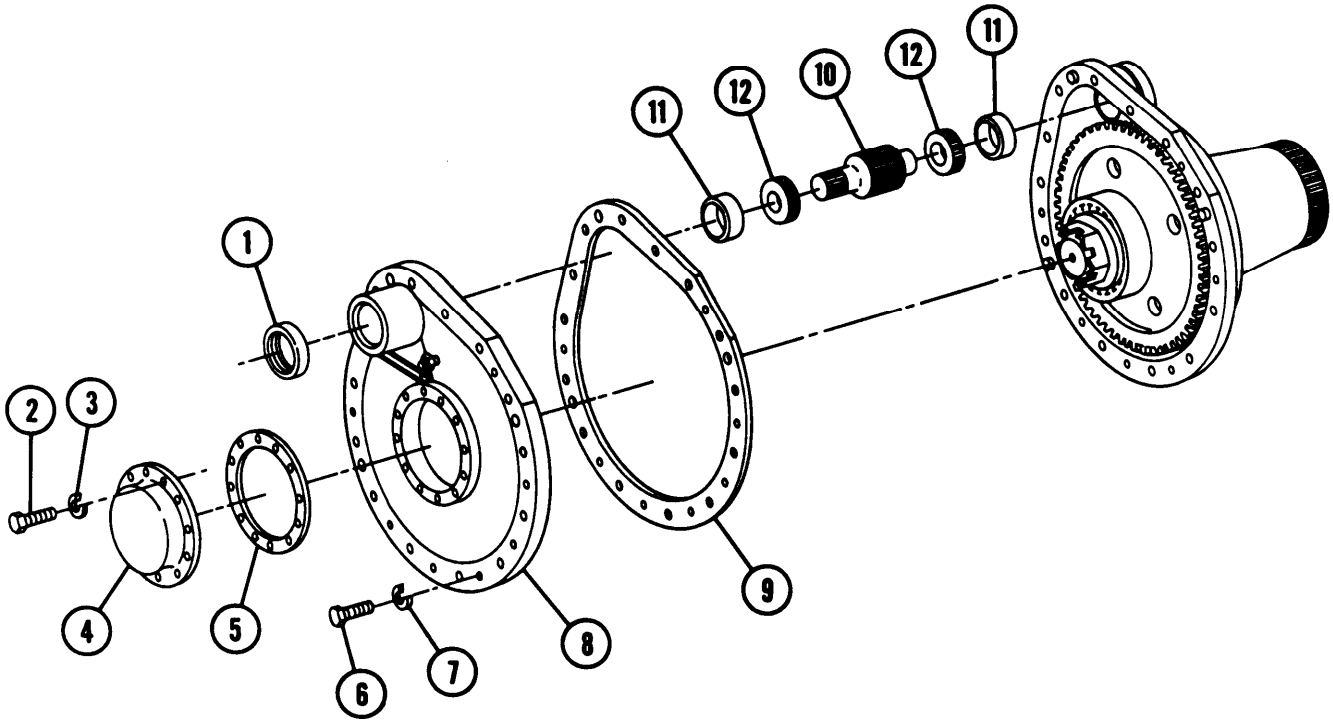
1
2
3
4
5
6
7
8
9
10
11
11
12
12

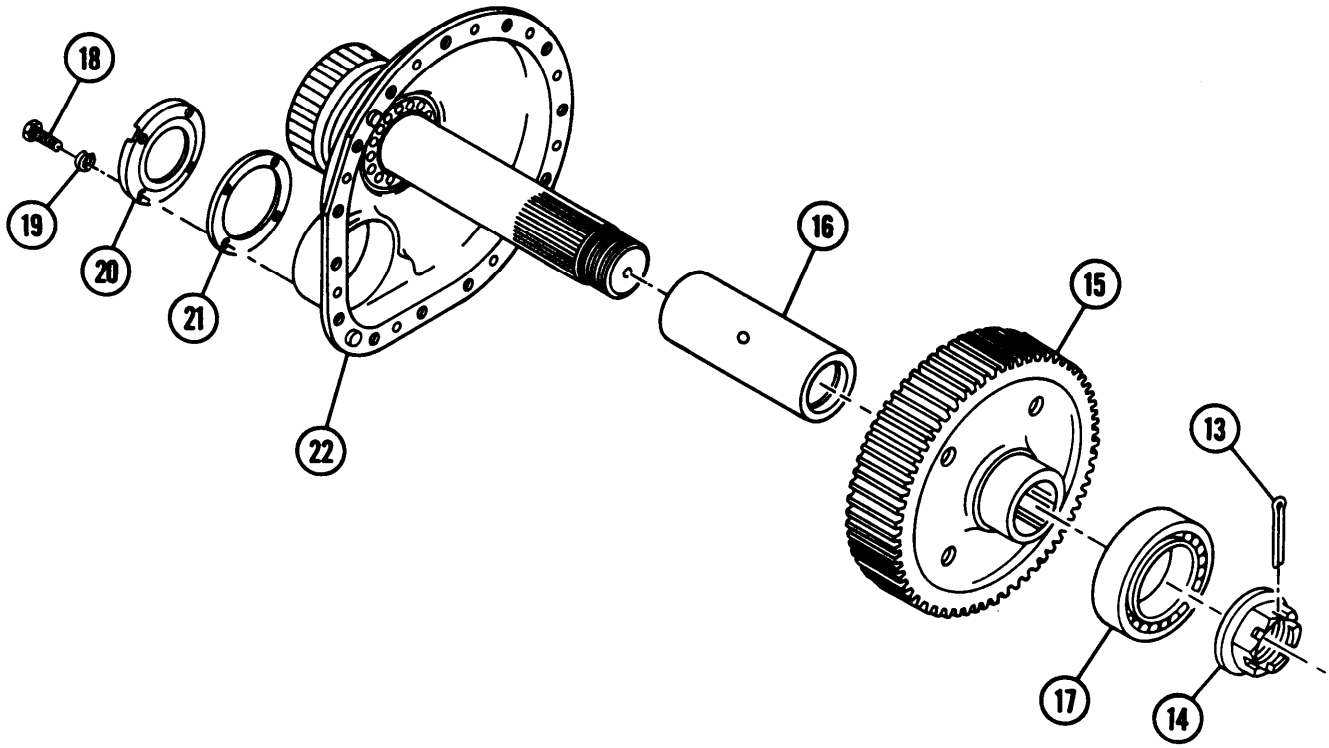
13
14
15
16
17
18
19
20
21
22

## 8-1 FINAL DRIVE ASSEMBLY — CONTINUED

**a. Disassembly — Continued**

9 Remove eight screws (23), eight lockwashers (24), output shaft (25), and gasket (26). Discard lockwashers and gasket.

10 Remove bearing (27), gasket (28), cap (29), and seal (30). Discard gasket and seal.

11 Remove two plugs (31).

**b. Assembly**

1 Install two plugs (31).

2 Apply coat of grease to mating surface of new seal (30).

3 Install seal (30), cap (29), new gasket (28), and bearing (27).

4 Install new gasket (26), output shaft (25), eight new lockwashers (24), and eight screws (23). Torque screws to 35-40 lb-ft (47-54 N-m).

5 Install two bearing cones (12) to input splined gearshaft (10).

6 Install two bearing races (11) and splined gearshaft (10) to final drive housing (22).

7 Install new gasket (9), housing cover (8), seven new lockwashers (7), and seven screws (6). Torque screws to 75-80 lb-ft (102-108 N-m).

8 Install new gasket (5), cover (4), 12 new lockwashers (3), 12 screws (2), and new seal (1). Torque screws to 35-40 lb-ft (47-54 N-m).

9 Install new gasket (21), input shaft cover (22), four new lockwashers (19), and four screws (18). Torque screws to 35-40 lb-ft (47-54 N-m).

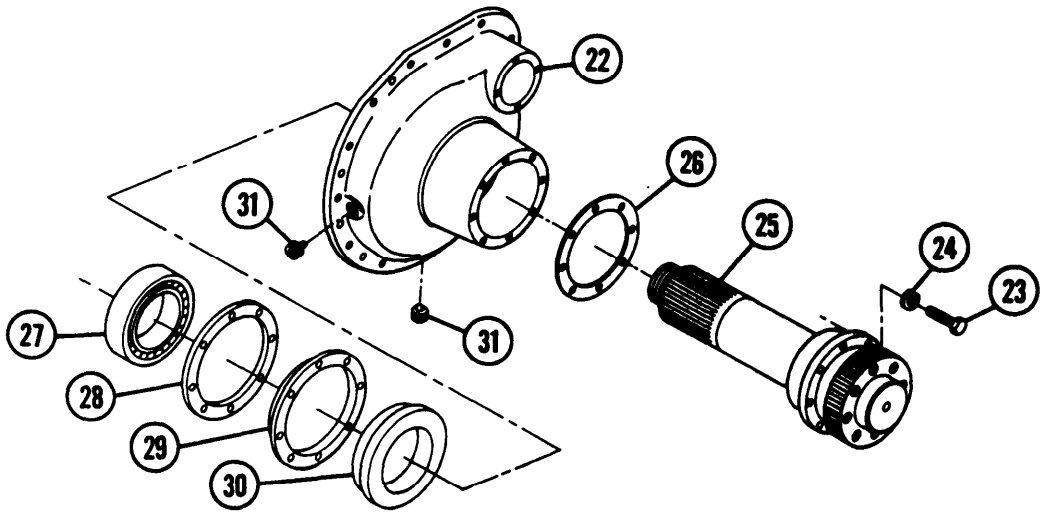

10 Install bearing (17) to ring gear (15).

11 Install spacer (16) and ring gear (15) to output shaft (25).

12 Place final drive housing (22) in fabricated stand.

13 Install nut (14) and torque nut to 425-475 lb-ft (576-644 N-m) to ensure seating of parts. If slot in nut is alined with cotter pin hole, install new cotter pin (13). Tighten nut (30° maximum), until slot alines with hole.

14 Install cotter pin (13) with head inserted in nut (14) slot. Hold head in place with bucking bar while bending cotter pin (long leg must be bent flat against nut with short leg bent back, but not protruding beyond end of shaft).

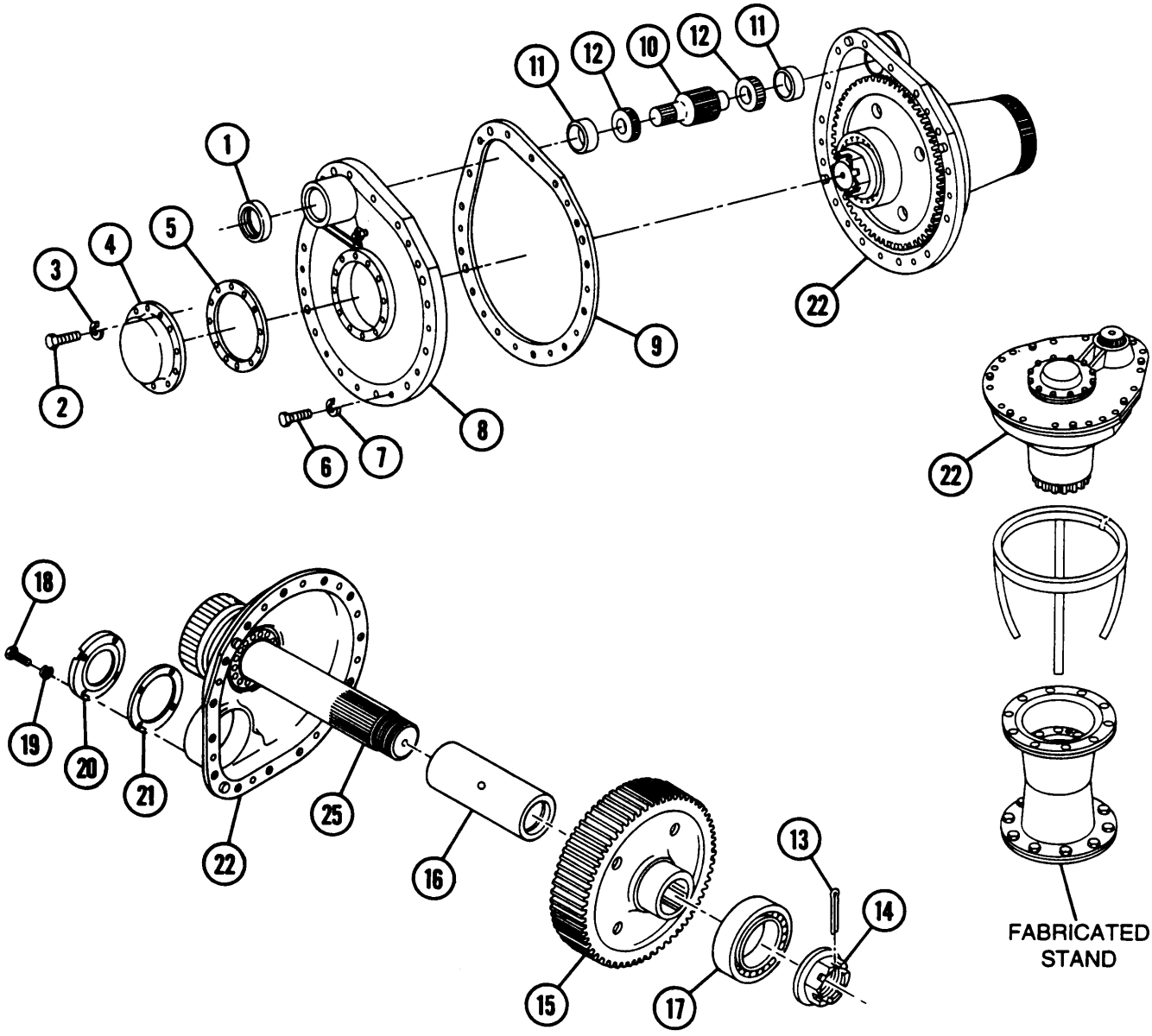


**NOTE**

FOLLOW-ON MAINTENANCE: Install final drive (TM 9-2350-311-20-1)

## SECTION II. TRACK SUSPENSION

## 8-2 ROAD WHEEL ARM ASSEMBLY — UPPER SPINDLE

This task covers: a. Disassembly b. Assembly

**INITIAL SETUP**

**Tools**
General mechanic's tool kit (item 14, Appx C)
Prong wrench (item 25, Appx C)
Torque wrench (item 26, Appx C)

**Materials/Parts**
Grease (item 9, Appx B)
Key washer (item 8, Appx F)
Preformed packing (item 21, Appx F)
Seal (item 61, Appx F)
Seal (item 71, Appx F)

**References**
TM 9-2350-311-20-1

**Equipment Conditions**
Road wheel arm assembly removed (TM 9-2350-311-20-1)

**a. Disassembly**

1 Remove two screws (1), housing (2), preformed packing (3), and seal (4). Discard preformed packing and seal.

2 Straighten key washer (5) tabs.

3 Remove nut (6) using prong wrench.

4 Remove key washer (5), thrust spacer (7), and inner bearing race assembly (8). Discard key washer.

5 Remove retainer (9), outer bearing race assembly (10), bearing spacer (11), and seal (12). Discard seal.

**b. Assembly**

1 Apply coat of grease to mating surface of new seal (12).

2 Install new seal (12), retainer (9), outer bearing race assembly (10), bearing spacer (11), inner bearing race assembly (8), thrust spacer (7), and new key washer (5) to upper spindle (13).

3 Install nut (6) to upper spindle (13) using prong wrench. Torque nut to 255-275 lb-ft (346-373 N-m).

4 Bend key washer (5) tabs to secure key washer to nut (6).

5 Install new seal (4), new preformed packing (3), housing (2), and two screws (1).

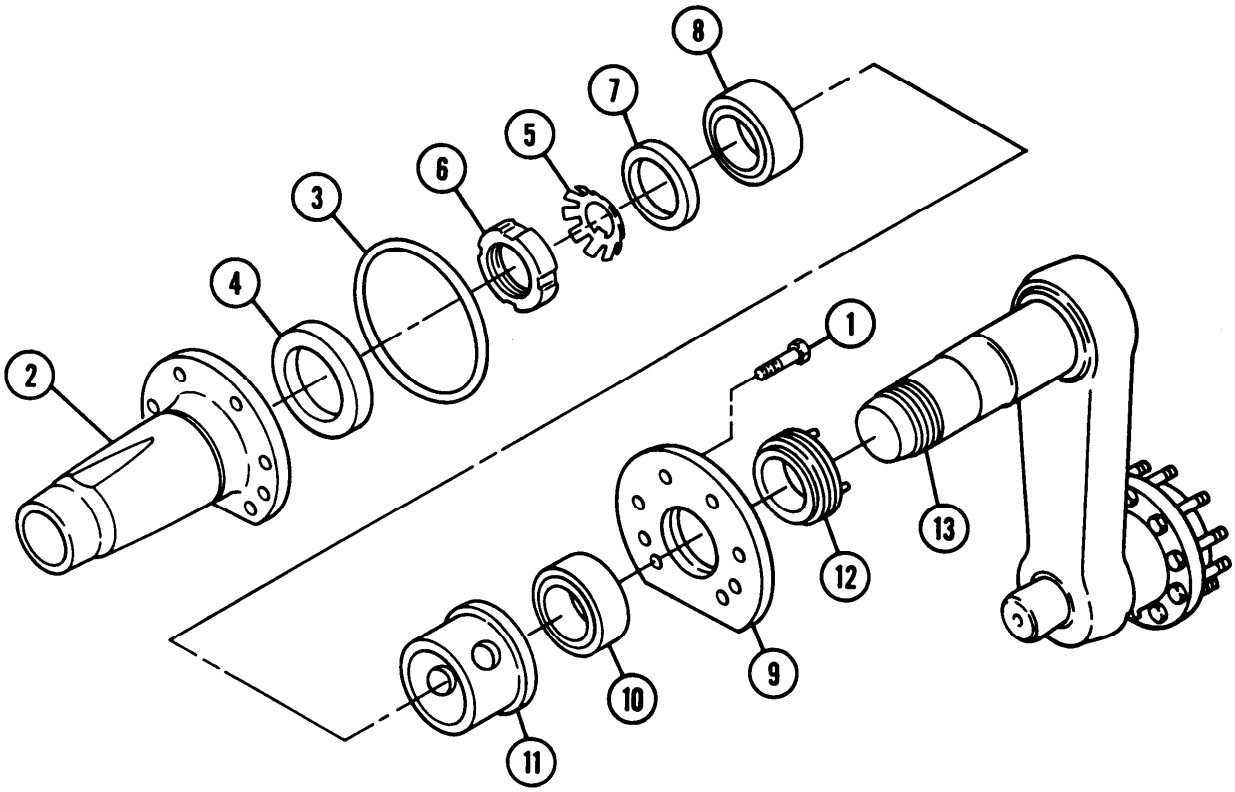


**NOTE**

FOLLOW-ON MAINTENANCE: Install road wheel arm assembly (TM 9-2350-311-20-1)

# CHAPTER 9
# HULL-RELATED COMPONENTS

## GENERAL

This chapter describes and illustrates procedures for disassembly, inspection, repair, and assembly of the personnel airduct ventilating fan and the bilge pump. It also describes and illustrates the removal and installation of the data plates.

For disassembly, inspection, repair, and assembly of the personnel heater, refer to TM 9-2350-205-24&P.

CONTENTS PAGE

9-1 PERSONNEL AIRDUCT VENTILATING FAN . . . . . 9-2
9-2 BILGE PUMP . . . . . 9-8
9-3 DATA PLATES . . . . . 9-16

## 9-1 PERSONNEL AIRDUCT VENTILATING FAN

This task covers: a. Disassembly b. Inspection and Repair c. Assembly

**INITIAL SETUP**

**Tools**
General mechanic's tool kit (item 14, Appx C)
Growler (item 10, Appx C)
Multimeter (item 16, Appx C)

**Materials/Parts**
Grommet (item 43, Appx F)
Lockrings (2) (item 3, Appx F)
Lockwire (2) (item 87, Appx F)
Lockwashers (2) (item 29, Appx F)
Lockwashers (4) (item 30, Appx F)

**Personnel Required**
Two

**References**
TM 9-214

**Equipment Conditions**
Personnel ventilating airduct fan removed (TM 9-2350-311-20-1)
Impeller blocked

### a. Disassembly

1 Remove nut (1), two washers (2), impeller (3), and shaft key (4).

2 Remove two nuts (5), two lockwashers (6), and noise filter cover (7) from noise filter (8). Discard lockwashers.

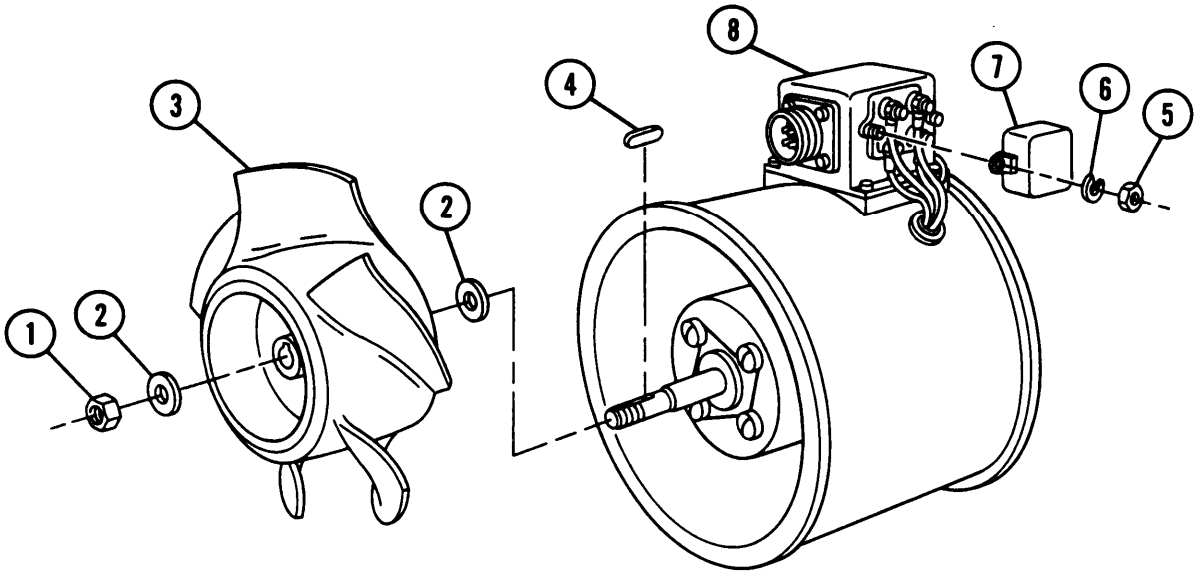

3 Remove four nuts (9), four lockwashers (10), and four electrical leads (11 ) from noise filter terminals (1 2). Discard lockwashers.

4 Remove lockwire (13), four screws (14), four flat washers (15), ground wire (16), and noise filter (8). Discard lockwire.

5 Remove lockwire (17), four screws (18), and four flat washers (19) at front of housing (20). Discard lockwire.

6 Remove grommet (21). Discard grommet.

7 Feed electrical leads (11 ) through grommet hole (22) and remove motor assembly (23).

8 Remove two screws (24) and two electrical brushes (25).

9 Remove two screws (26) and end cover (27).

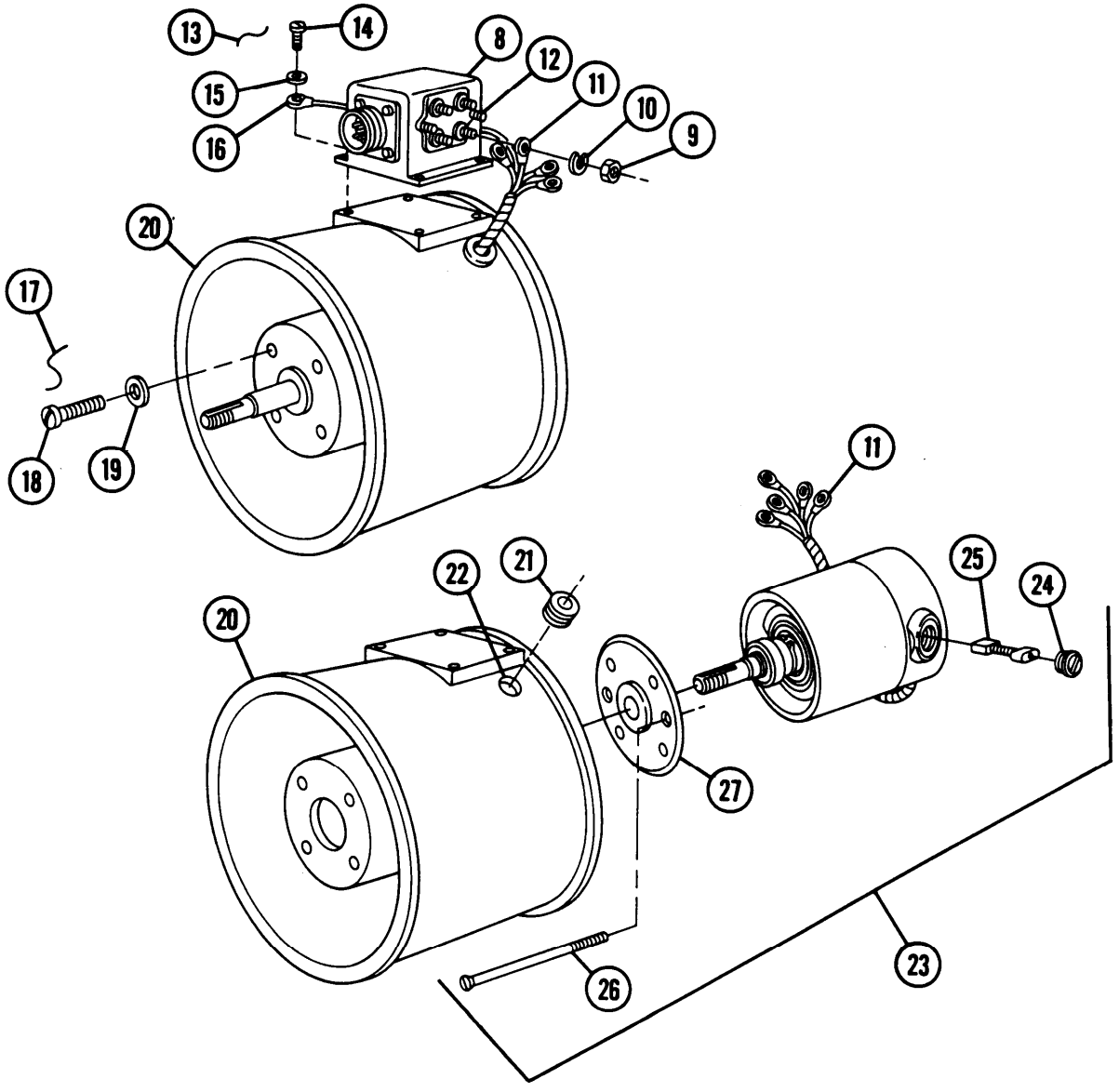

## 9-1 PERSONNEL AIRDUCT VENTILATING FAN — CONTINUED

**a. Disassembly — Continued**

10 Remove armature (28) from motor field and frame assembly (29).

11 Remove two flat washers (30), bearing (31), flat washer (32), and lockring (33). Discard lockring.

12 Remove bearing (34), spacer (35), flat washer (36), and lockring (37) from armature (28). Discard lockring.

13 Remove spring tension washer (38) and flat washer (39) from armature (28).

**b. Inspection and Repair**

1 Inspect impeller (3). Remove nicks with soft stone or fine-mill file. Inspect for cracks. Replace if cracked.

2 Test noise filter (8) for continuity. Replace as required (TM 9-2350-311-20-1).

3 Replace grommet (21).

4 Inspect housing (20). Repair damage as required. Inspect for impeller rubbing on housing. Straighten housing or remove high spots as required.

5 Inspect shaft key (4). Replace if damaged.

6 Check length on two electrical brushes (25). Length should be 0.685 to 0.825 in. (17.40 to 20.96 mm).

7 Inspect two screws (24). Replace if threads are damaged.

NOTE

If armature or motor field and frame assembly are damaged or defective, replace motor assembly as unit.

8 Test armature (28) on growler.

9 Test motor field and frame assembly (29) for short or open field windings (TM 9-2350-311-20-1).

10 Inspect spring tension washer (38). Replace if damaged.

11 Inspect two bearings (40 and 41 ) (TM 9-214).

**c. Assembly**

1 Install flat washer (39) and spring tension washer (38) to motor field and frame assembly (29).

2 Install new lockring (37), flat washer (36), spacer (35), and bearing (34) to armature (28).

3 Install armature (28) to motor field and frame assembly (29).

4 Install new lockring (33), flat washer (32), bearing (31), and flat washer (30) to armature (28).

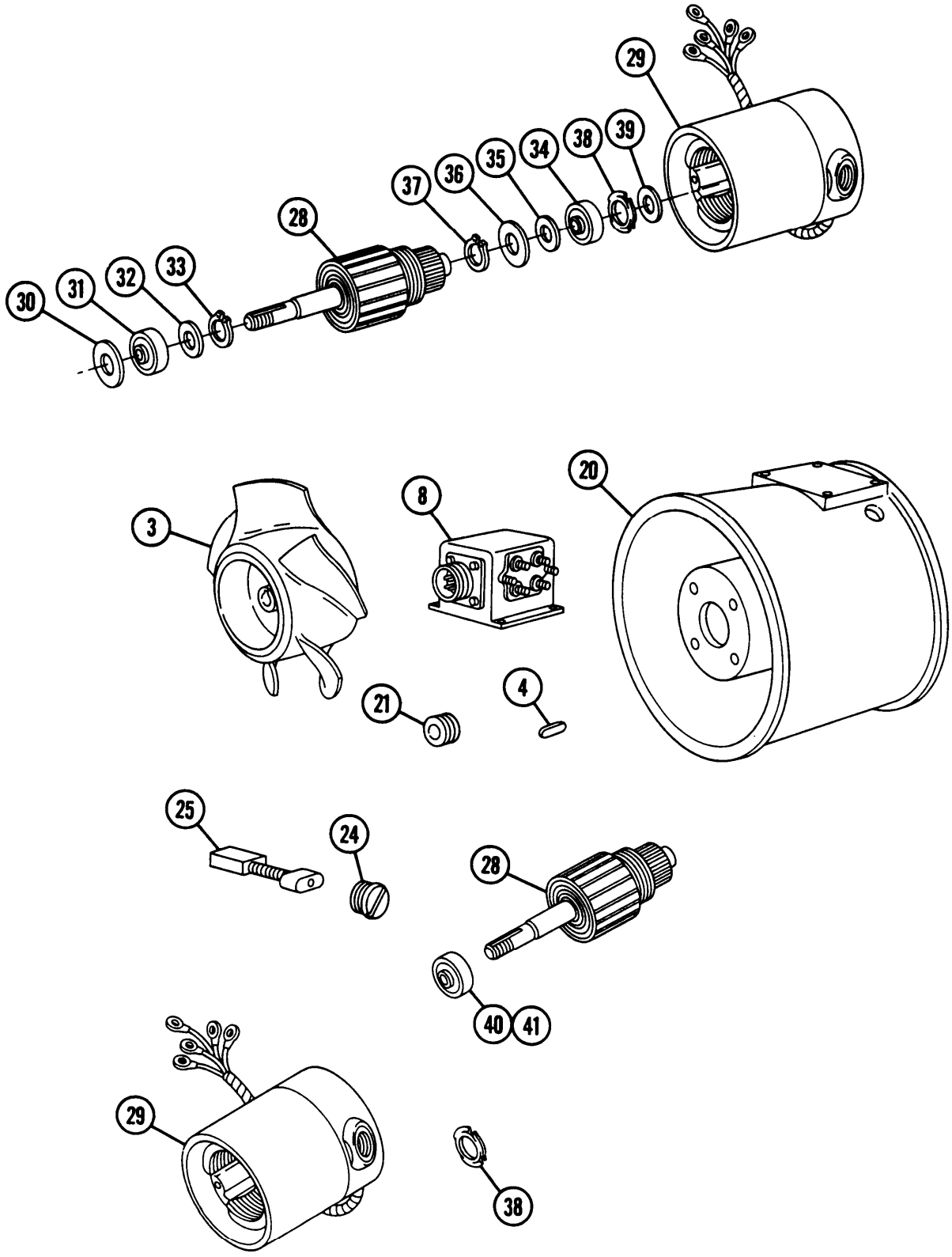
29
39
38
34
35
36
37
28
33
32
31
30
20
8
3
4
21
25
24
28
40
41
29
38

## 9-1 PERSONNEL AIRDUCT VENTILATING FAN — CONTINUED

**c. Assembly — Continued**

5 Install two electrical brushes (25) and two screws (24).

6 Install end cover (27) and two screws (26).

7 Feed electrical leads (11) through grommet hole (22) and install motor assembly (23). Install new grommet (21).

8 Install four flat washers (19), four screws (18), and new lockwire (17) to front of housing (20).

9 Install noise filter (8), four flat washers (15), four screws (14), ground wire (16), and new lockwire (13).

10 Rewire noise filter (8). See schematic for complete instructions.

11 Connect four electrical leads (11) to noise filter terminals (12) and install four new lockwashers (10) and four nuts (9).

12 Install noise filter cover (7), two new lockwashers (6), and two nuts (5) to noise filter (8).

13 Install shaft key (4), impeller (3), two washers (2), and nut (1).

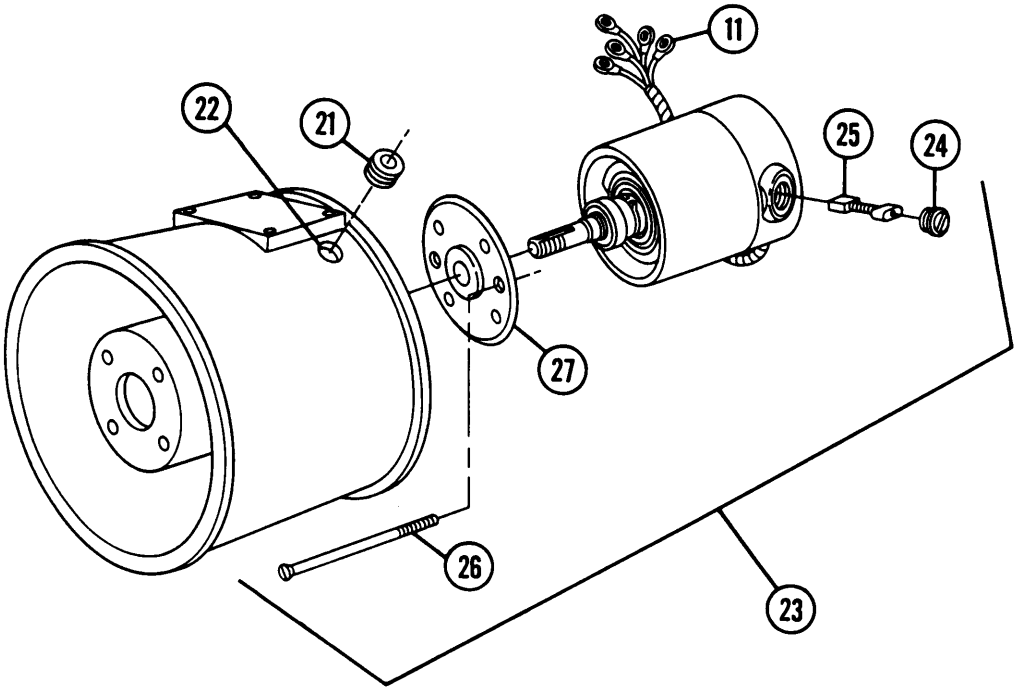

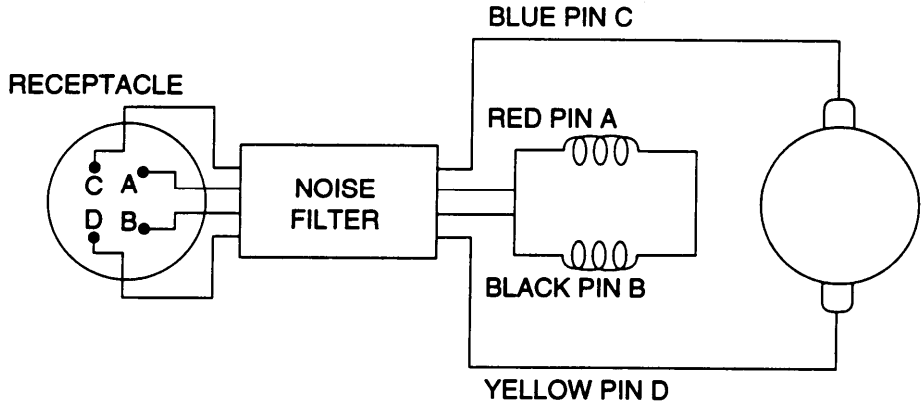


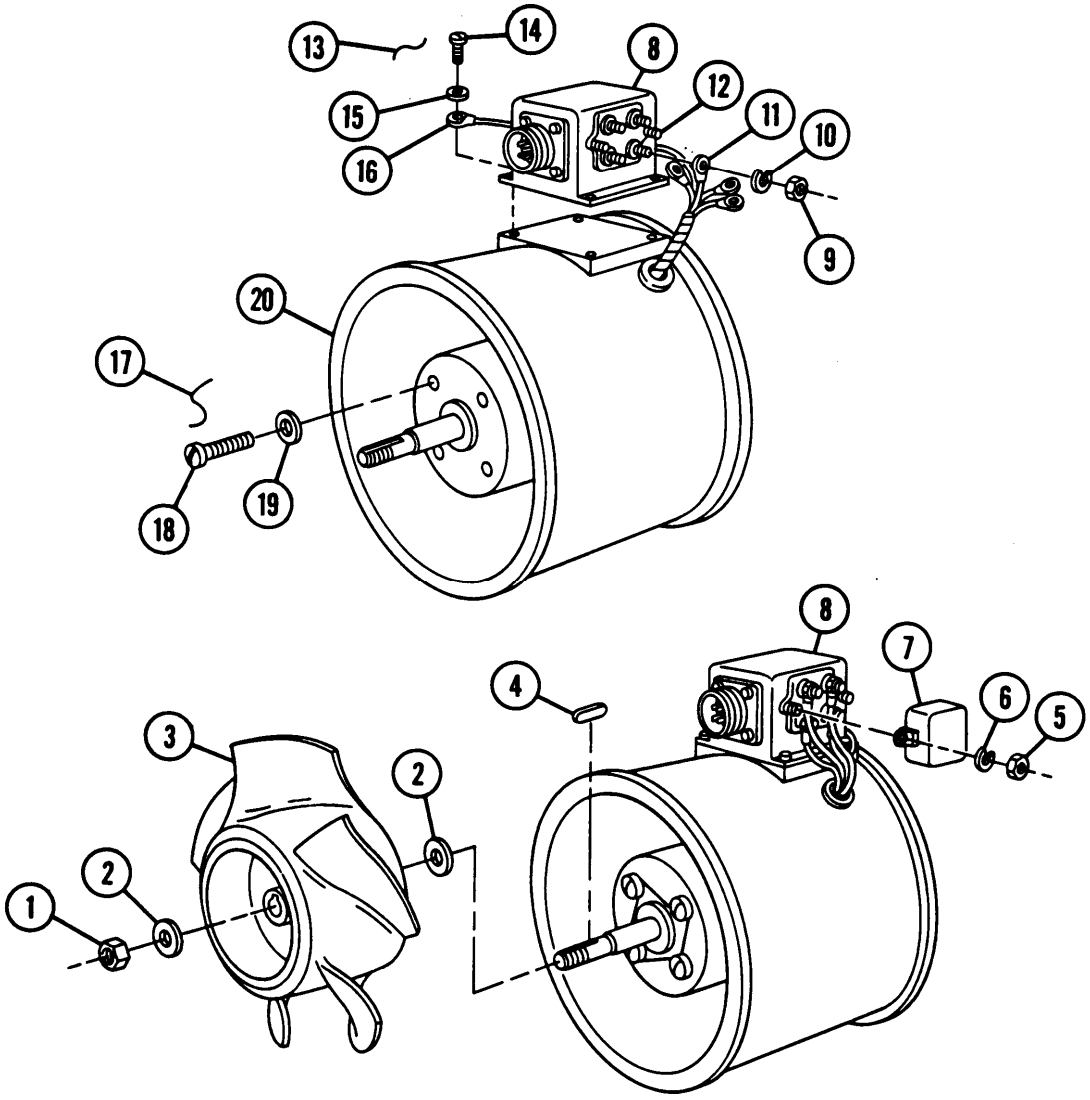


**NOTE**

FOLLOW-ON MAINTENANCE: Install personnel ventilating airduct fan (TM 9-2350-311-20-1)

## 9-2 BILGE PUMP

This task covers: a. Disassembly b. Inspection, Repair, and Test c. Assembly

**INITIAL SETUP**

**Tools**
General mechanic's tool kit (item 14, Appx C)
Fine-mill file (item 9, Appx C)
Fabricated removal/installation tool (item 4, Appx D)
Grease pencil
Growler (item 10, Appx C)
Multimeter (item 16, Appx C)
Sharpening stone (item 23, Appx C)
Soldering gun (item 11, Appx C)

**Materials/Parts**
Brushes (4) (item 56, Appx F)
Gasket (item 57, Appx F)
Gaskets (4) (item 58, Appx F)
Gaskets (2) (item 59, Appx F)
Gaskets (2) (item 77, Appx F)
Lockwashers (3) (item 69, Appx F)
Lockwashers (4) (item 70, Appx F)
Lockwashers (12) (item 81, Appx F)
Lockwasher (item 32, Appx F)
Lockwire (item 10, Appx F)
Preformed packings (4) (item 14, Appx F)
Snap ring (item 4, Appx F)
Solder (item 23, Appx B)
Solder flux (item 24, Appx B)

**References**
TB SIG 222
TM 9-214
TM 9-2350-311-20-1

**Equipment Conditions**
Bilge pump removed (TM 9-2350-311 -20-1 )

### a. Disassembly

1 Remove four brush cap assemblies (1) and four preformed packings (2). Discard preformed packings.

2 Remove four brushes (3). Discard brushes.

3 Remove four bolts (4) and four lockwashers (5). Discard lockwashers.

4 Remove four screws (6), four fiat washers (7), inlet screen (8), and impeller cover (9).

5 Remove nut (10) using fabricated removal/Installation tool and remove lockwasher (11) and impeller (12). Discard lockwasher.

6 Remove impeller housing (13) and key (14). Remove four nuts (15), four lockwashers (16), four flat washers (17), and four gaskets (18). Pull off drive end bell assembly (19). Discard lockwashers and gaskets.

7 Remove four screws (20), four lockwashers (21), seal cover (22), and gasket (23). Discard lockwashers and gasket.

8 Remove drive end bell assembly (19), four fiberglass sleeves (24), and gasket (25). Remove four studs (26) from drive end bell assembly if replacement is required. Discard gasket.

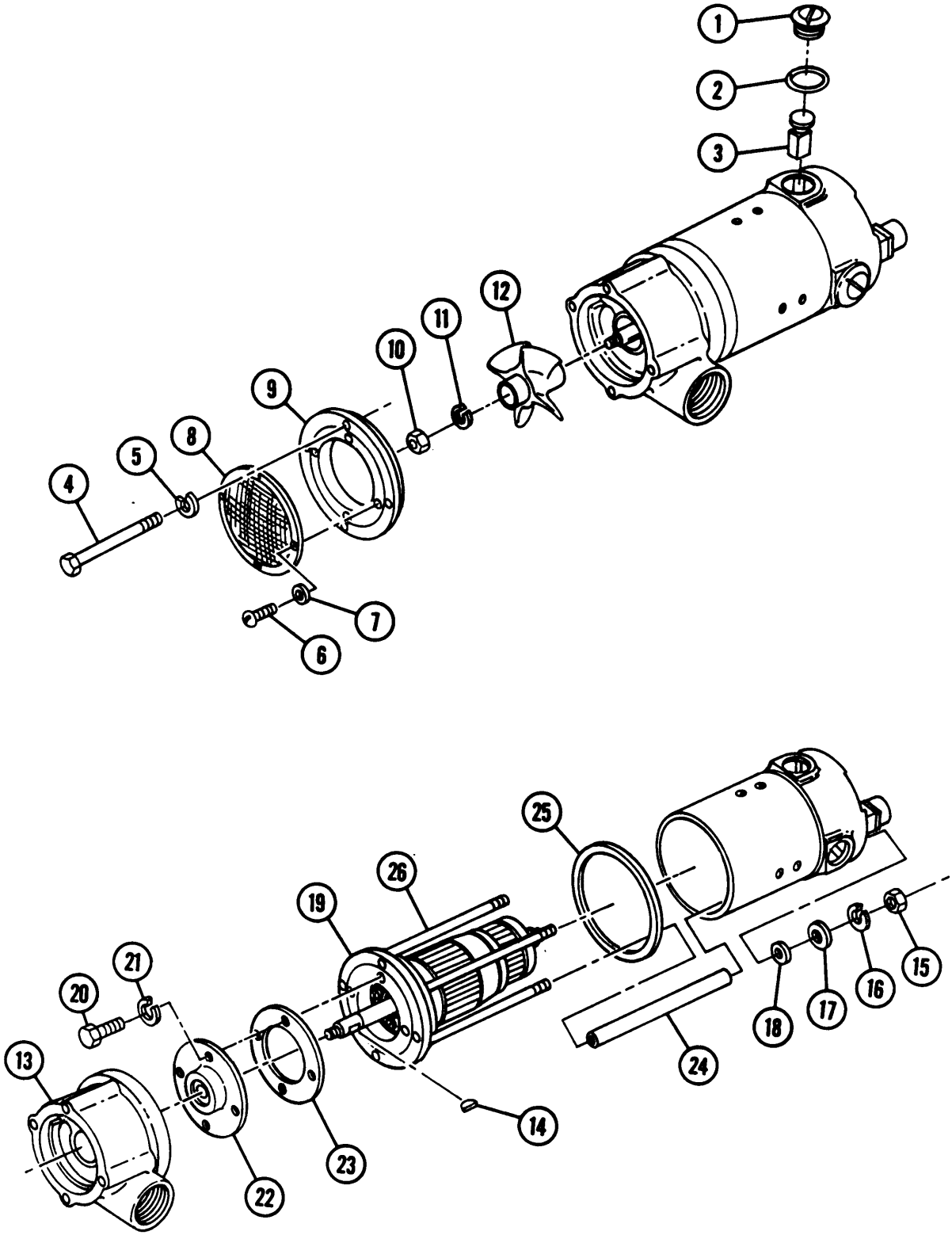
1
2
3
4
5
6
7
8
9
10
11
12
13
14
15
16
17
18
19
20
21
22
23
24
25
26

## 9-2 BILGE PUMP — CONTINUED

**a. Disassembly — Continued**

9 Remove lockwire (27), four screws (28), retainer plate (29), and snap ring (30). Discard lockwire and snap ring.

10 Remove bearing (31), retainer (32), and drive end bell (33) from rotor (34). Use tape or grease pencil to identify bearing.

11 Remove commutator end bearing (35). Use tape or grease pencil to identify bearing.

12 Remove yoke (36) and gasket (37) from commutator end bell assembly (38). Discard gasket.

13 Remove four screws (39), four lockwashers (40), connector (41), two gaskets (42), connector adapter (43), and insulator sleeve (44). Discard lockwashers and gaskets.

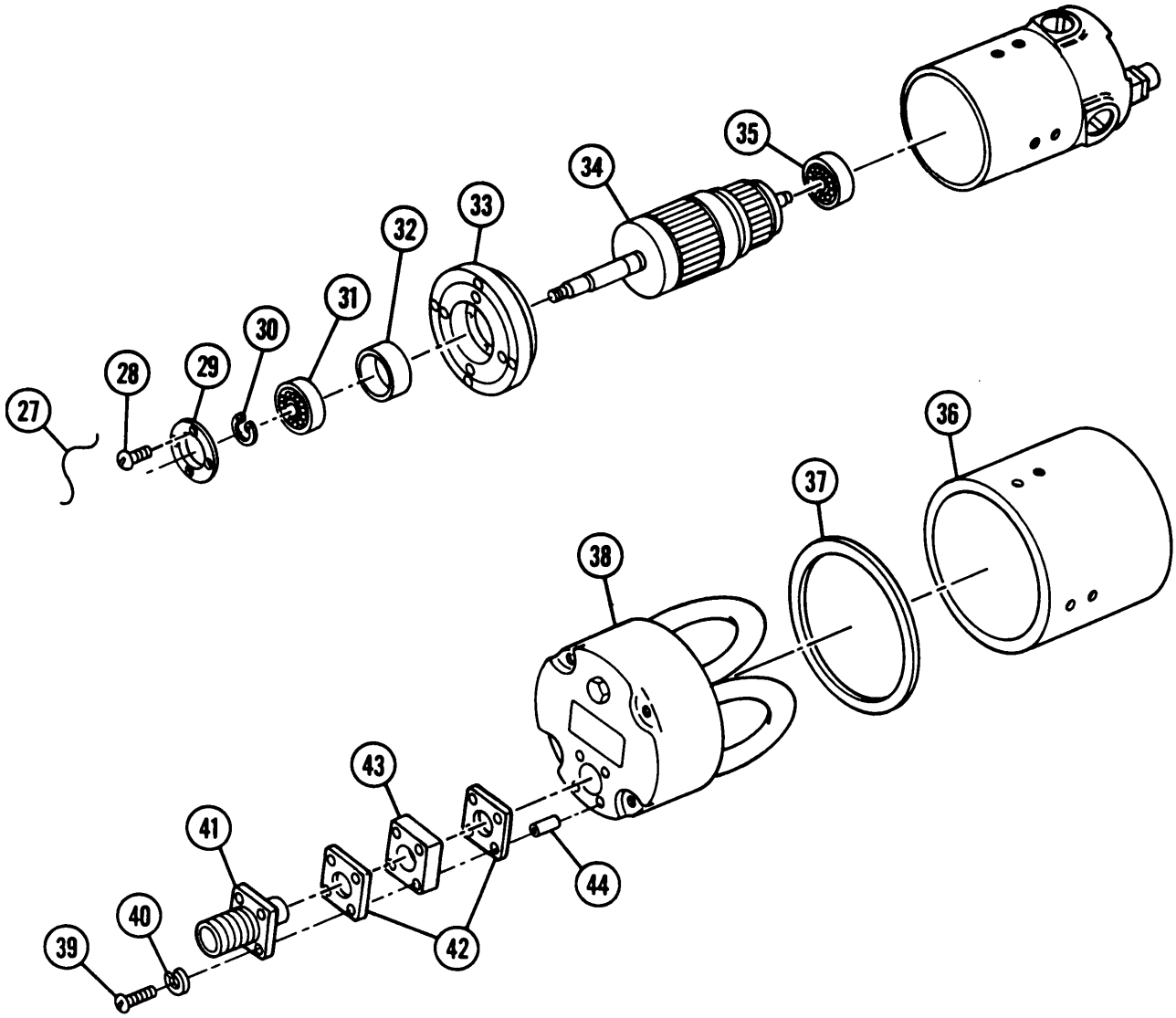

14 Unsolder electrical lead (45) from field coils (46) to connector (TB SIG 222).

15 Remove screw (47), lockwasher (48), and field coils (46) from commutator end bell (49). Discard lockwasher.

16 Remove two screws (50), two lockwashers (51), and jumper wire (52). Discard lockwashers.

**b. Inspection, Repair, and Test**

**WARNING**

Compressed air used for cleaning purposes must not exceed 30 psi (207 kPa). Use only with effective chip guarding and personal protective equipment (goggles/shield, gloves, etc).

1 Clean inlet screen (8) mesh with compressed air. Inspect mesh. Replace if torn.

2 Inspect impeller cover (9). Replace if damaged or defective.

3 Inspect impeller (1 2). Smooth burrs and nicks with soft stone or fine-mill file.

4 Inspect impeller housing (13). Replace if damaged or defective.

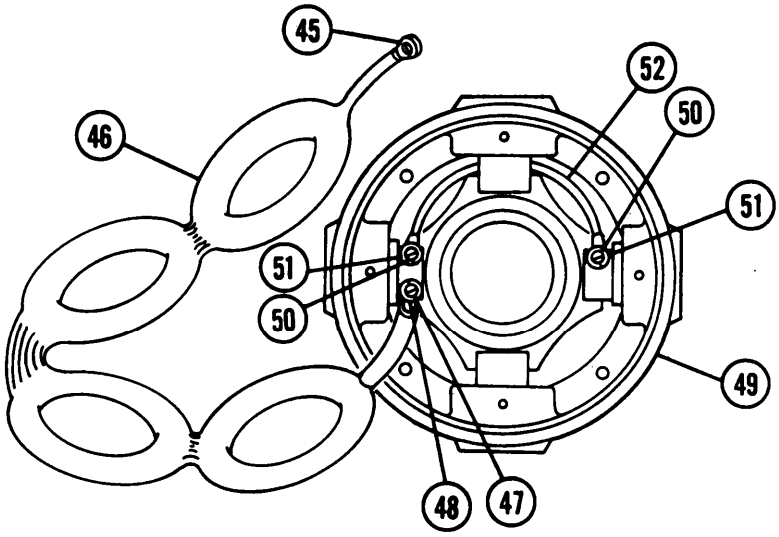


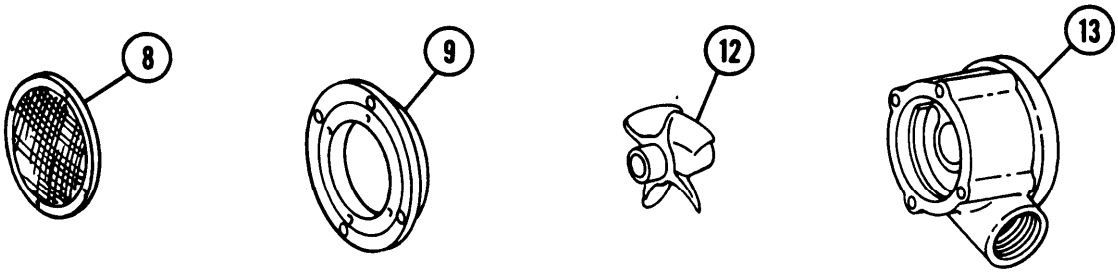

## 9-2 BILGE PUMP — CONTINUED

b. **Inspection, Repair, and Test-Continued**

5 Inspect key (14). Replace if damaged or broken.

6 Inspect **seal cover (22). Replace if cover is cracked or** if mating surfaces are warped.

7 Inspect four fiberglass sleeves (24). **Replace if** chipped or broken.

8 Inspect two bearings (31 and 35) (TM 9-214). Replace if defective.

9 Inspect drive end bell (33). Replace if cracked or defective or if mating surfaces are warped.

10 Test rotor (34) on growler. **Replace** rotor if defective. Turn down commutator by undercutting mica as required.

11 Inspect yoke (36). Replace if cracked, damaged, or defective.

12 Inspect connector (41). **Replace if** defective.

13 Test field coils (46) for continuity (TM 9-2350-311-20-1). Replace if defective.

14 Test jumper wire (52) for continuity (TM 9-2350-311-20-1). Replace if defective.

15 Inspect commutator end bell (49). **Replace if** cracked, damaged, or defective.

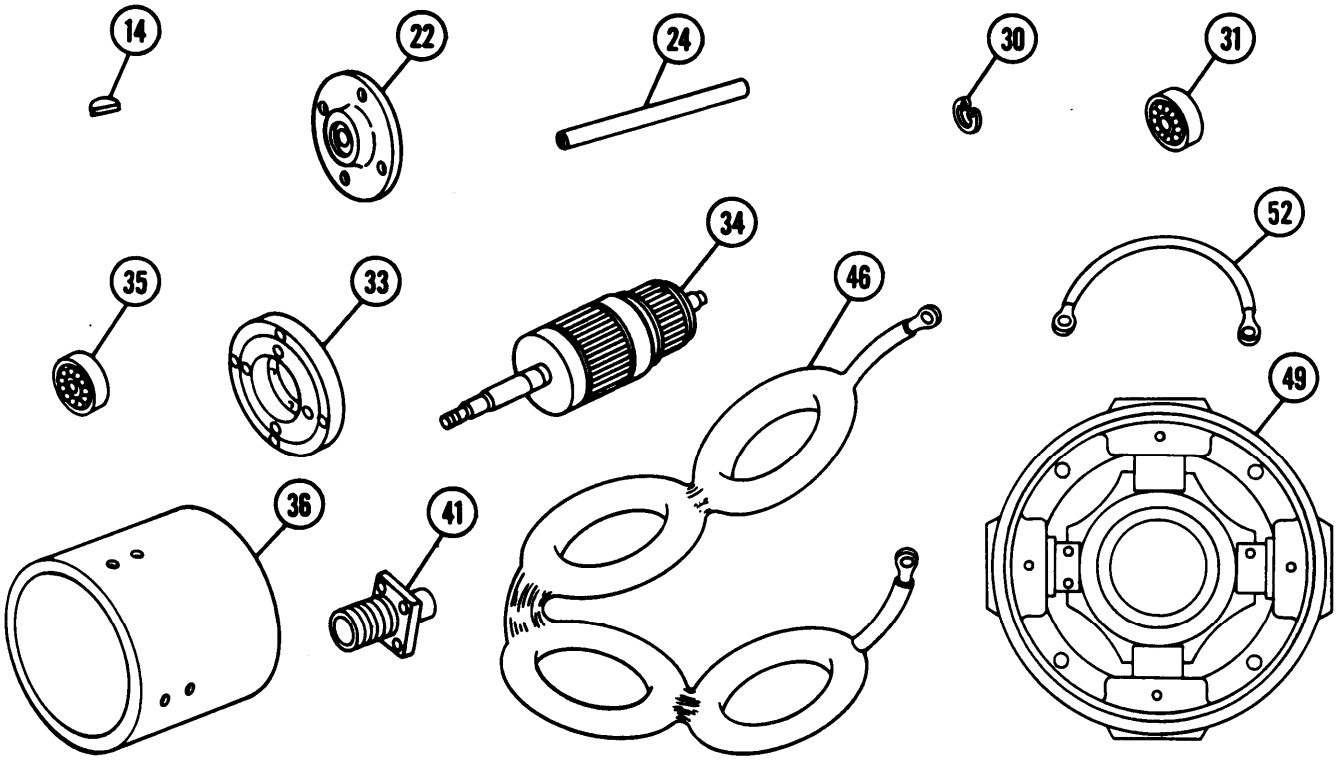

**c. Assembly**

1 Install jumper wire (52), two new lockwashers (51 ), and two screws (50).

2 Install field coils (46), new lockwasher (46), and screw (47) to commutator end bell (50).

3 Solder electrical lead (45) from field coils (46) to connector (TB SIG 222).

4 Install insulator sleeve (44), connector adapter (43), and two new gaskets (42). Install connector (41), four new lockwashers (40), and four screws (39).

5 Install new gasket (37) and yoke (36) to commutator end bell assembly (36).

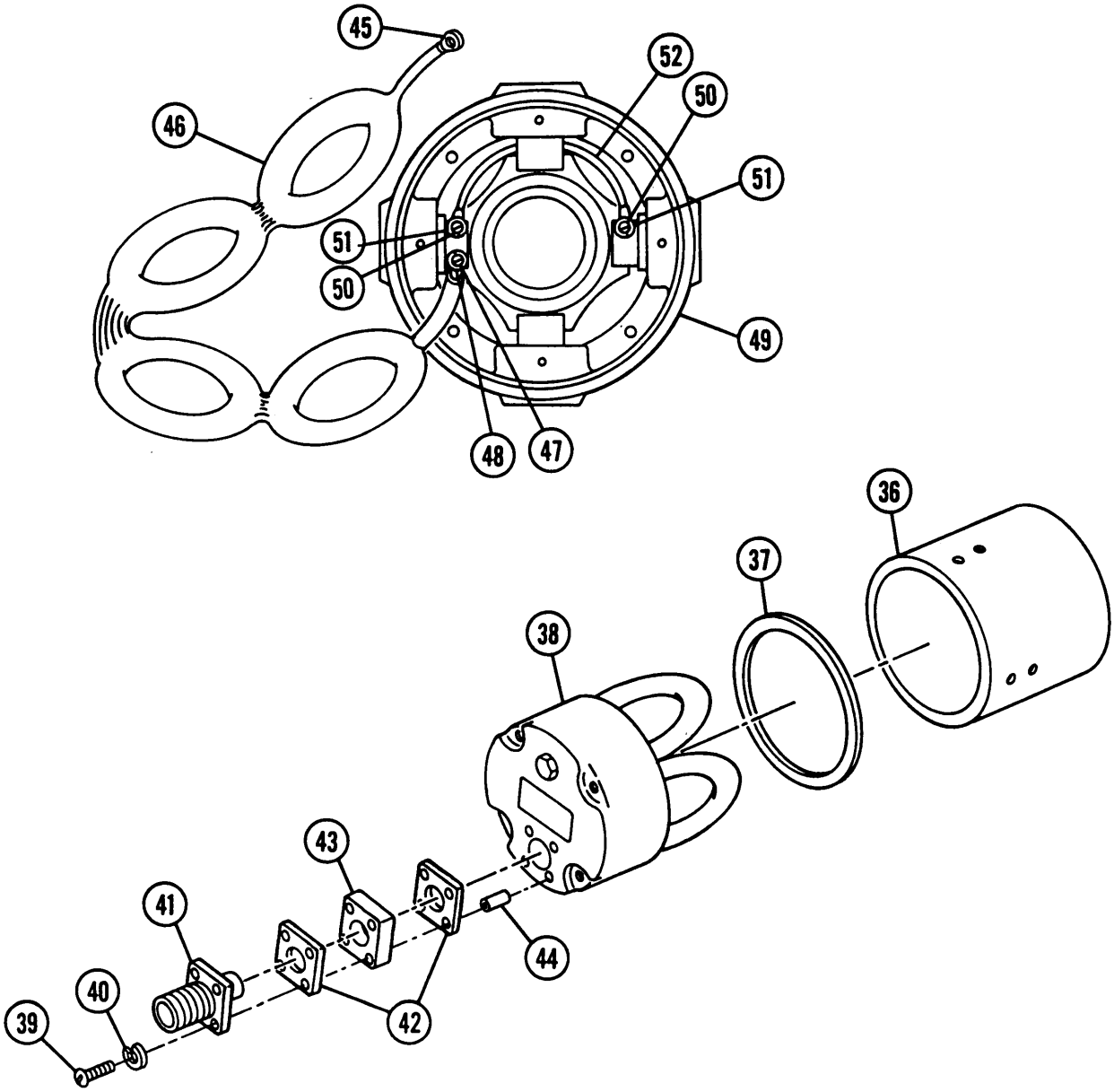

## 9-2 BILGE PUMP — CONTINUED

### c. Assembly — Continued

**NOTE**

Ensure bearings are installed at location as shown. Do not reverse installation of bearings.

6 Install commutator end bearing (35) to rotor (34). Check label to correctly identify bearing.

7 Install drive end bell (33), retainer (32), and bearing (31) to rotor (34). Check label to correctly identify bearing.

8 Install new snap ring (30), retainer plate (29), four screws (28), and new lockwire (27).

9 Install new gasket (25), four fiberglass sleeves (24), and drive end bell assembly (1 9). Replace studs (26) as required.

10 Install four new gaskets (18), four flat washers (17), four new lockwashers (16), and four nuts (15).

11 Install new gasket (23), seal cover (22), four new lockwashers (21), and four screws (20).

12 Install drive end bell assembly (1 9), key (14), and impeller housing (13).

13 Install impeller (12) using fabricated removal/installation tool and install new lockwasher (11) and nut (10).

14 Install impeller cover (9), inlet screen (8), four flat washers (7), and four screws (6).

15 Install four new lockwashers (5) and four bolts (4).

16 Install four new brushes (3).

17 Install four new preformed packings (2) and four brush cap assemblies (1).

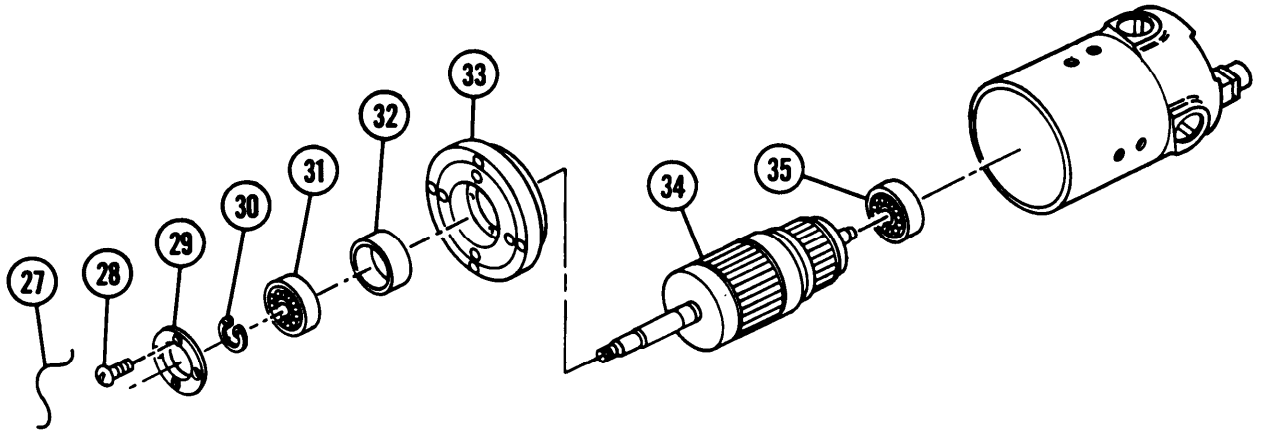

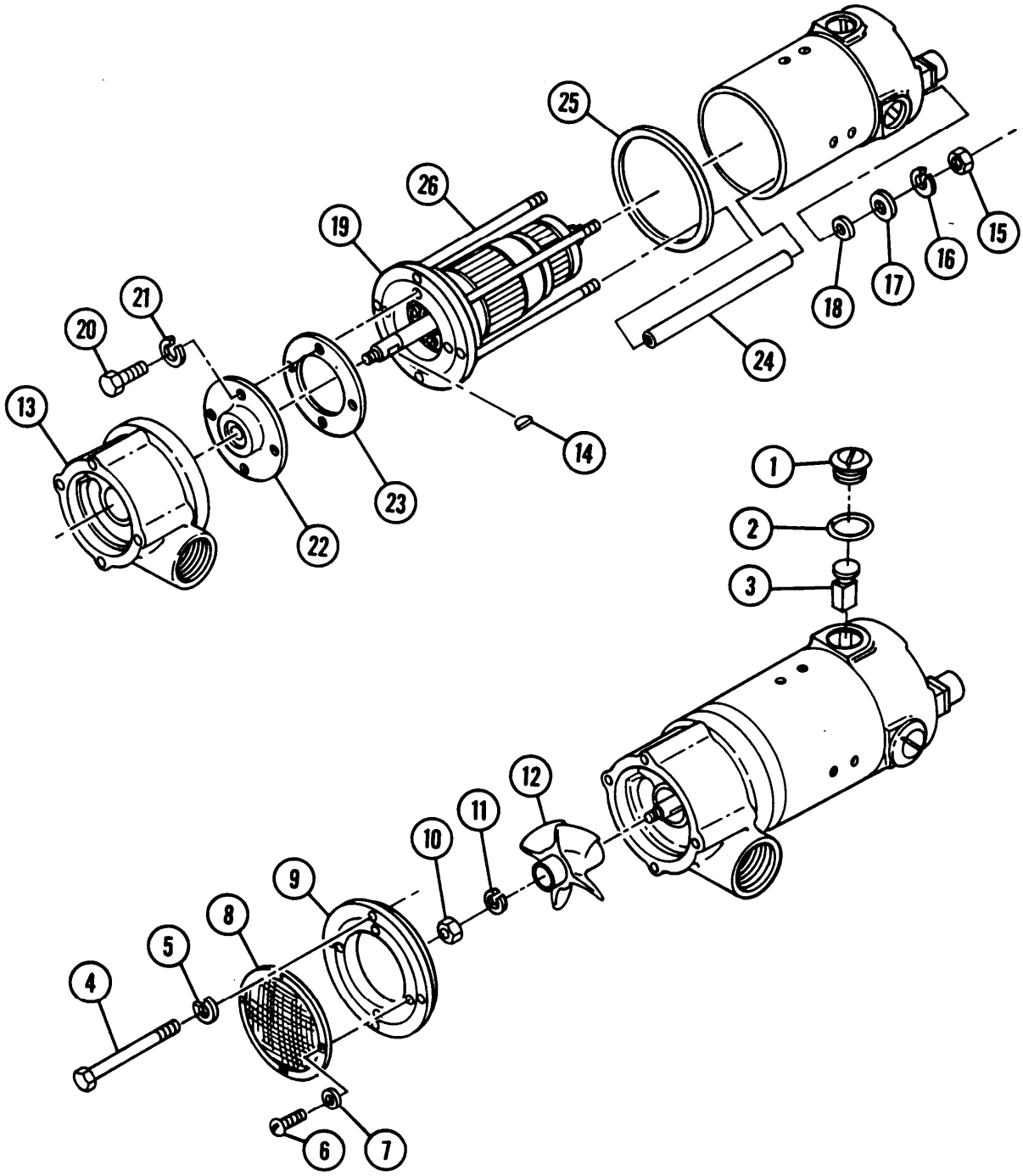


**NOTE**

FOLLOW-ON MAINTENANCE: Install bilge pump (TM 9-2350-311-20-1)

## 9-3 DATA PLATES

This task covers: a. Removal b. Installation

**INITIAL SETUP**

Tools
General mechanic's tool kit (item 14, Appx C)

### a. Removal

**NOTE**

Vehicle data plates differ only with information shown on plate.

1 Remove four screws (1).

2 Remove data plate (2).

### b. Installation

**NOTE**

Vehicle data plates differ only with information shown on plate.

1 Install data plate (2).

2 Install four screws (1).

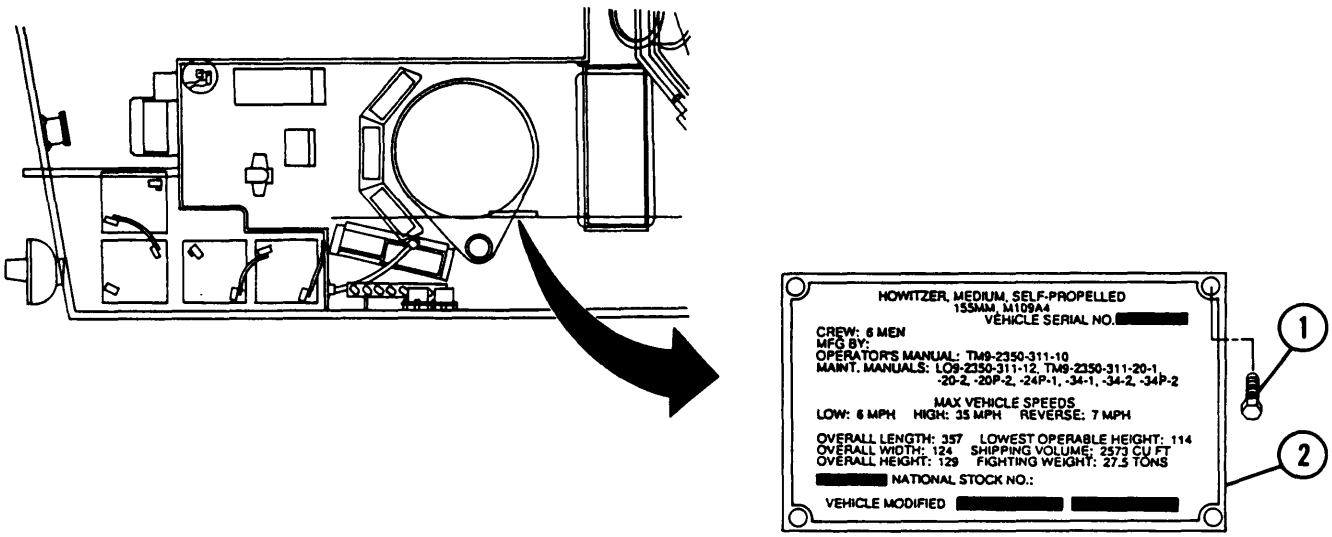

# CHAPTER 10
# ENGINE AND BATTERY WINTERIZATION KIT

## GENERAL

This chapter describes and illustrates procedures for installation of the winterization kit into the vehicle and disassembly and assembly of specific winterization kit components.

CONTENTS


| | | PAGE |
|---|---|---|
| Section I | WINTERIZATION KIT INSTALLATION.. | 10-2 |
| 10-1 | WINTERIZATION KIT INSTALLATION. | 10-2 |
| Section II | WINTERIZATION KIT COMPONENTS. | 10-24 |
| 10-2 | COOLANT HEATER | 10-24 |
| 10-3 | BLOWER MOTOR ASSEMBLY | 10-36 |

## SECTION I. WINTERIZATION KIT INSTALLATION

## 10-1 WINTERIZATION KIT INSTALLATION

This task covers: a. Installation b. Bleeding Winterization System

**INITIAL SETUP**

Tools
General mechanic's tool kit (item 14, Appx C)
Drill set (item 7, Appx C)
Portable drill (item 5, Appx C)
Suitable container
Trailer-mounted welding shop kit (item 24, Appx C)

References
TC 9-237
TM 9-2350-311-10
TM 9-2350-311-20-1

Equipment Conditions
Cooling system drained (TM 9-2350-311-20-1)

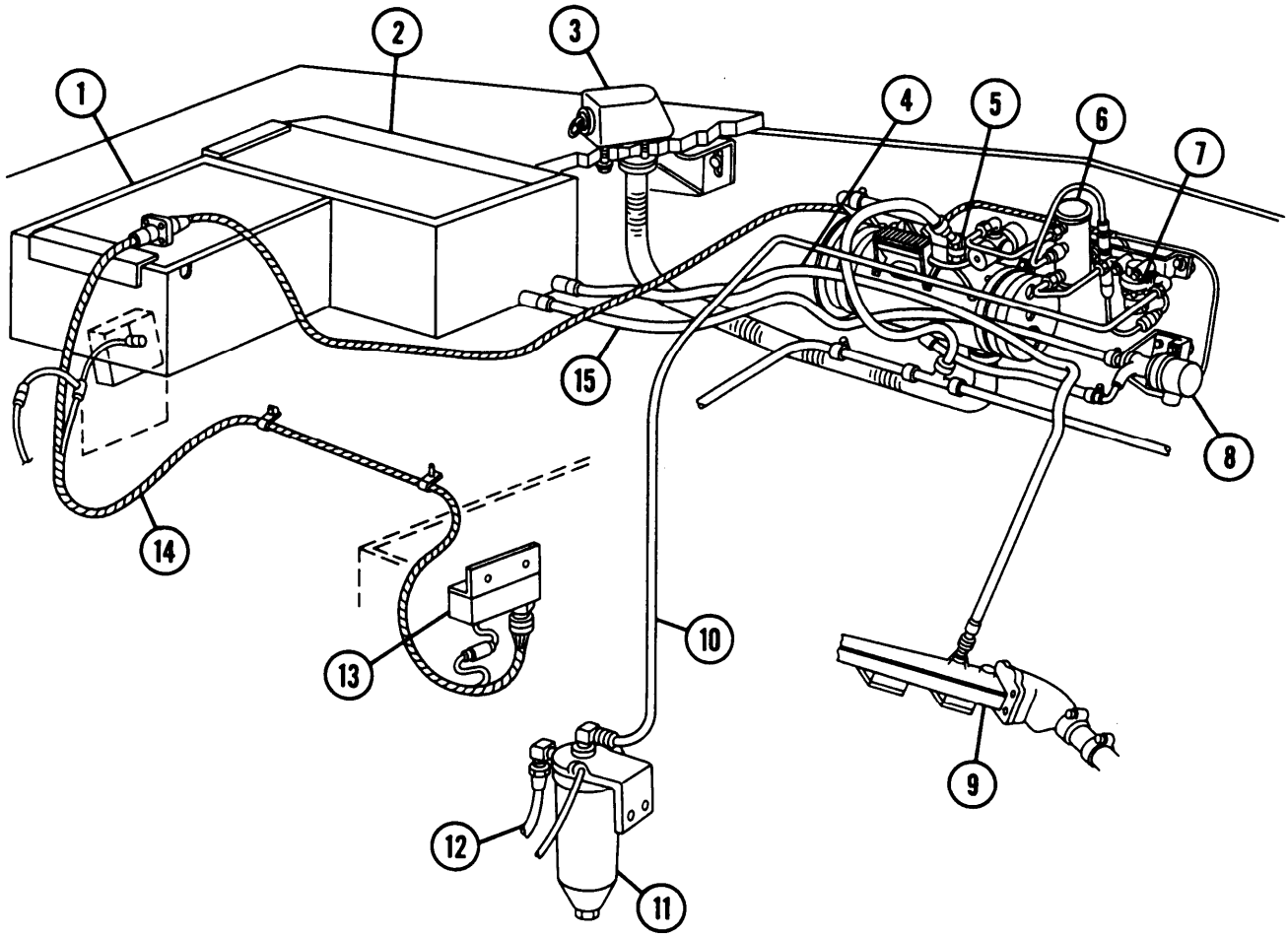

LEGEND

1 Rear battery winterization box
2 Front battery winterization box
3 Heater exhaust outlet
4 Coolant outlet hose
5 Coolant heater assembly
6 Electric fuel pump
7 Fuel filter
8 Heater coolant pump
9 Engine coolant right manifold
10 Primary fuel filter-to-coolant heater fuel filter hose
11 Primary fuel filter
12 Main fuel supply hose
13 Winterization kit control box
14 Coolant heater harness
15 Coolant inlet hose

**a. Installation**

1 Remove batteries and mounting components (TM 9-2350-311-20-1). Retain all parts for kit installation except battery tray screws.

2 Move battery wiring harness (1) over hull slope plate (2) to allow clearance for installation of winterization kit components.

3 Fold up front battery winterization box (3) and insert box through rear battery access opening (4). Locate box in front battery access opening (5).

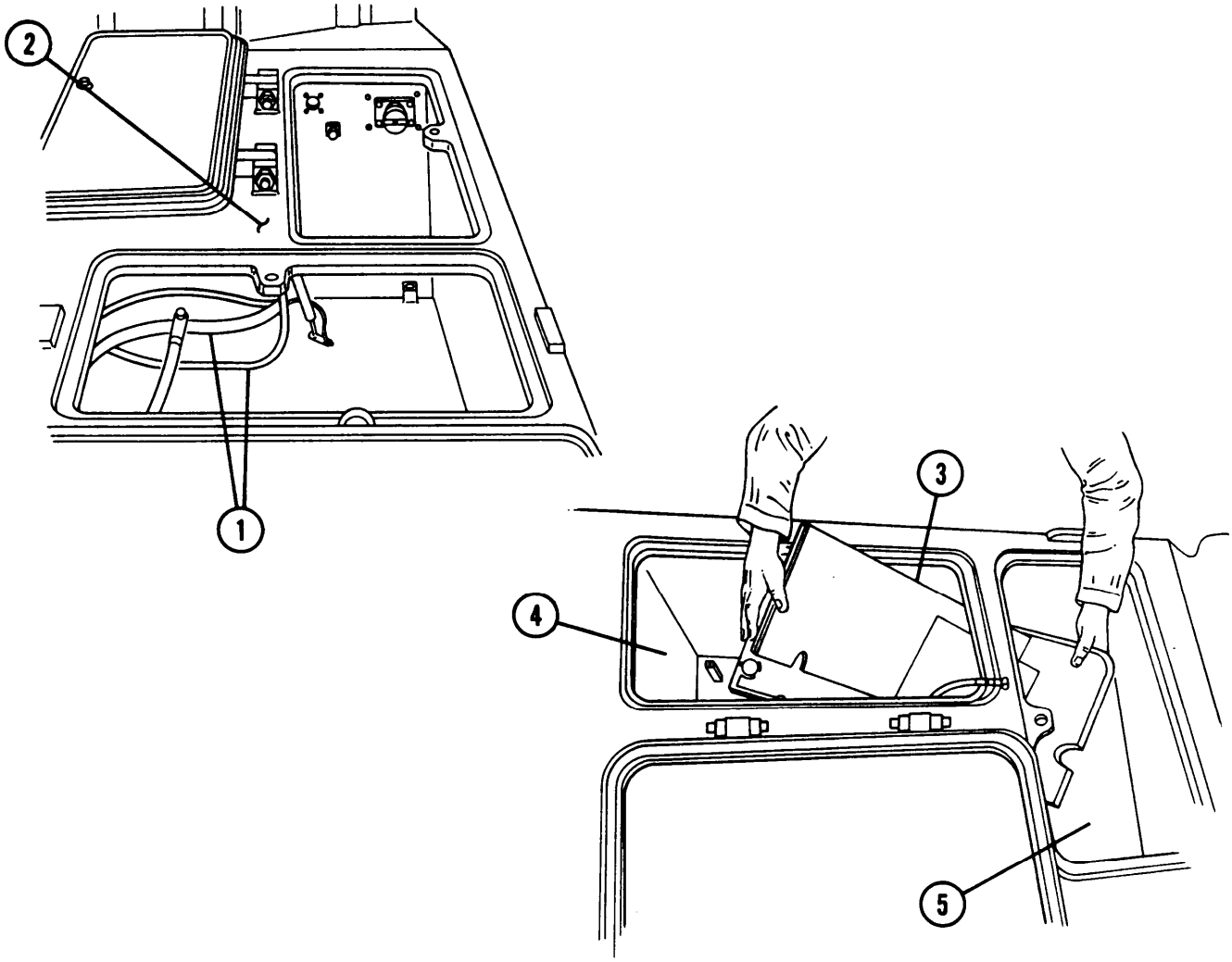

## 10-1 WINTERIZATION KIT INSTALLATION — CONTINUED

**a. Installation — Continued**

**NOTE**

Ensure bottom insulation cut-outs are alined with battery tray mounting blocks.

4 Fold up rear battery winterization box (6). Insert through front battery access opening (5) and locate box in rear battery access opening (4).

NOTE

- Ensure box bottom cut-outs are alined with battery tray mounting blocks.
- Screw and lockwasher were removed in step 1.

5 Attach front ground cable (7) to hull front plate with screw (8) and lockwasher (9).

6 Unfold sides of front and rear winterization boxes (3 and 6) and insert six retainer wires (10) at comers.

7 Secure six straps (11) to rivets (12) with lockwire (13).

8 Place grommets (14) (hidden) on battery heater (15) inlet and outlet tubes and install heater through front battery access opening (5). Insert tube grommets in front winterization box (3) cut-outs.

**NOTE**

Screw and lockwashers were removed in step 1. Four screws and 16 flat washers are provided for shimming adjustment of tray to make it level. Use of shims should be kept to minimum.

9 Install battery trays (16) and attach trays and battery heater (15) to sponsor with eight furnished screws (1 7) and eight lockwashers (18).

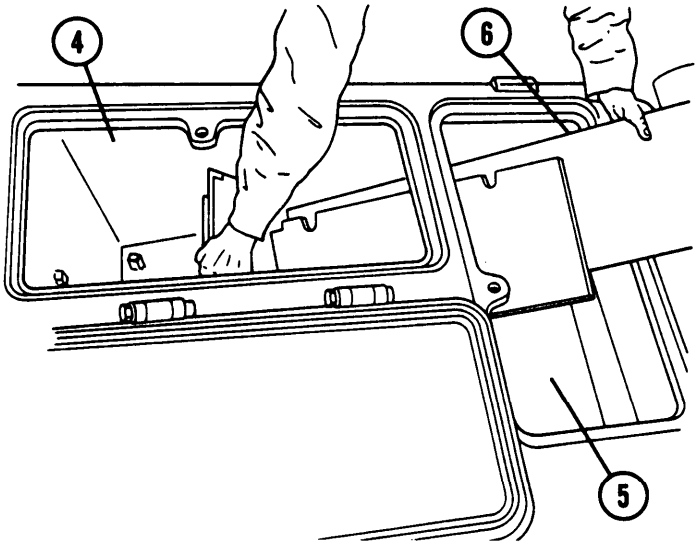

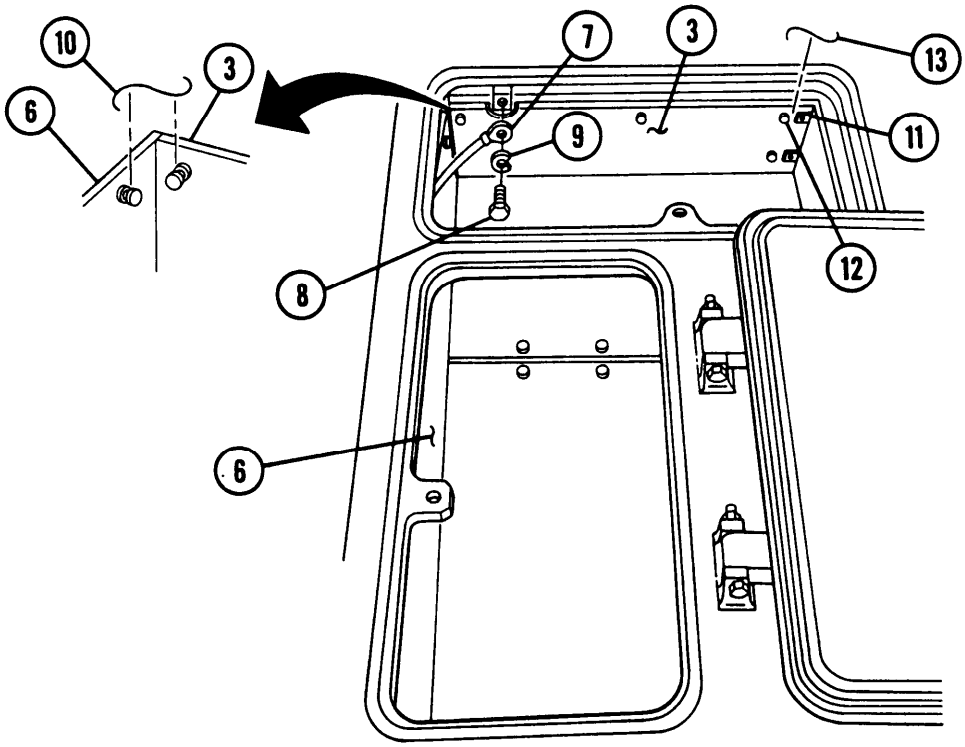
10
3
6
7
3
13
9
11
8
12
6

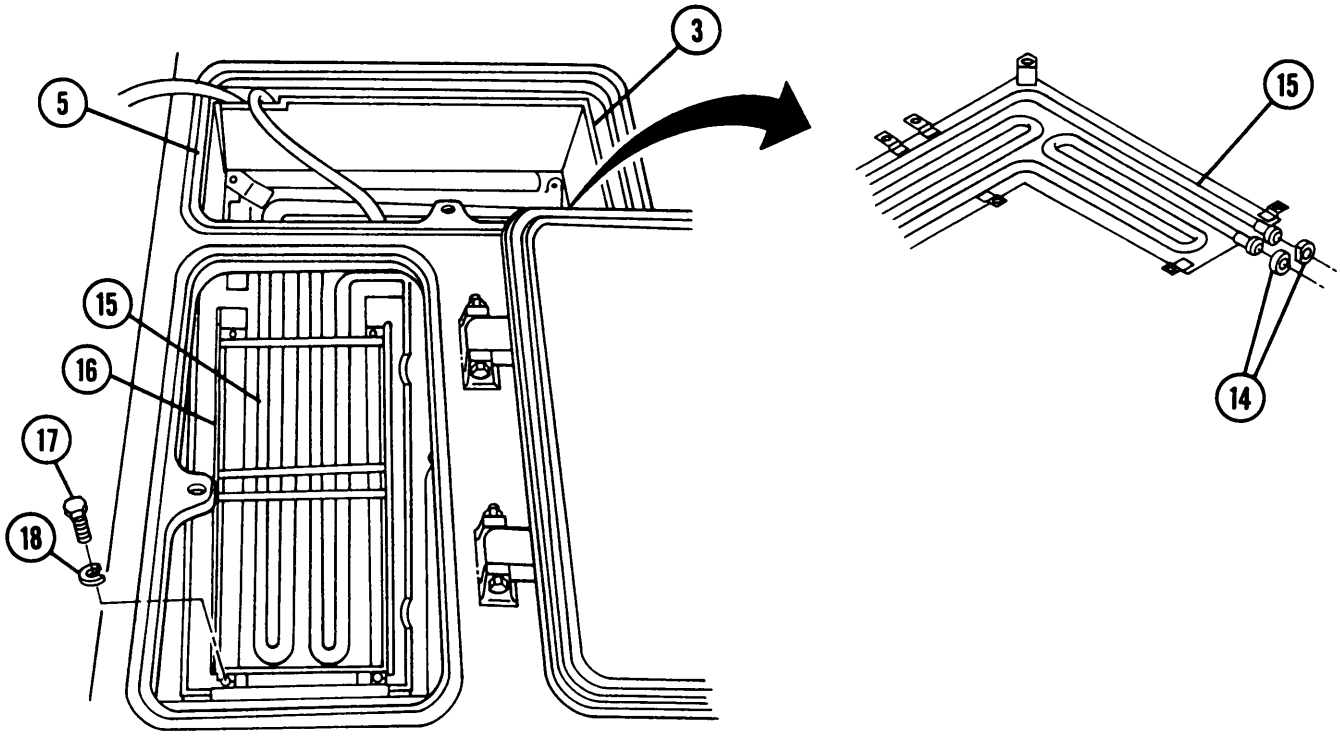
3
5
15
15
16
17
18
14

## 10-1 WINTERIZATION KIT INSTALLATION — CONTINUED

**a Installation — Continued**

10 **Place** four batteries on two battery trays with battery terminals positioned as shown below. Secure batteries using mounting components (TM 9-2350-311-20-1).

11 Open transmission left and right access doors and air-intake grille. Install four shock mounts (19) and two coolant heater mounting brackets (20) to hull front plate (21) with four lockwashers (22) and four nuts (23).

12 Cut 3.5 in. (8.9 cm) out of existing engine inlet coolant hose (24) at point midway between two coolant heater mounting brackets (20). Discard hose section. Place two clamps (25) over two hose ends, insert “Y” tube (26) as shown below, and tighten clamps.

13 **Place** hose clamp (27) over end of 0.625-in. - (15.9-mm-) id by 16-in. - (40.6-cm-) long hose (28). Install hose to "Y" tube (26) and tighten clamp

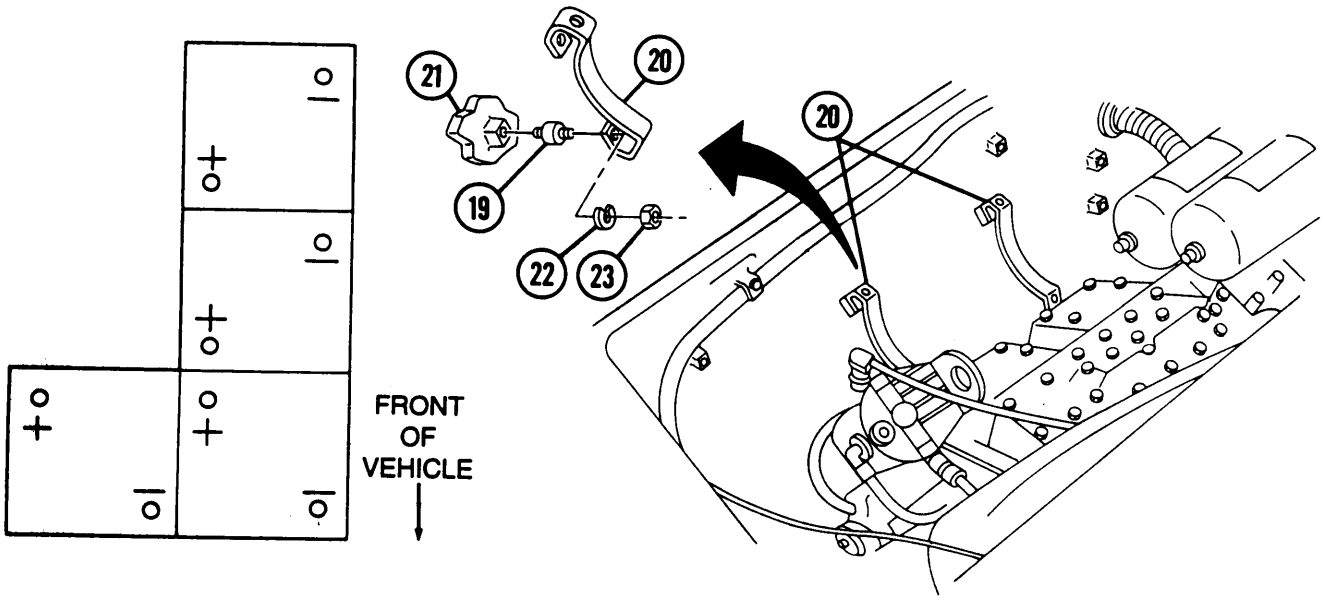


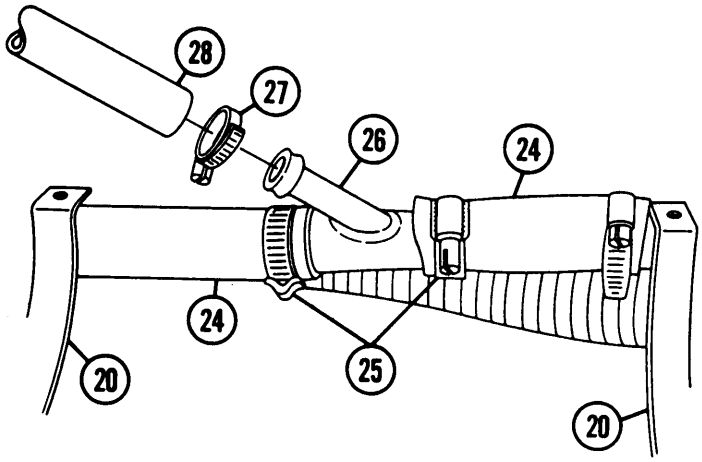

14 Place heater exhaust assembly (29) with hose clamp (30) in mounted position between coolant heater mounting brackets (20).

15 Install inlet elbow (31) and outlet elbow (32) to coolant heater assembly (33).

16 Place hose clamp (34) over end of 0.625-in. - (1 5.9-mm-) id by 18-in. - (45.7-cm-) long hose (35). Install hose to heater inlet elbow (31 ) and tighten clamp.

17 Place coolant heater assembly (33) in powerplant compartment as shown below. Connect heater exhaust assembly (29) and install hose clamp (36) and screw (37).

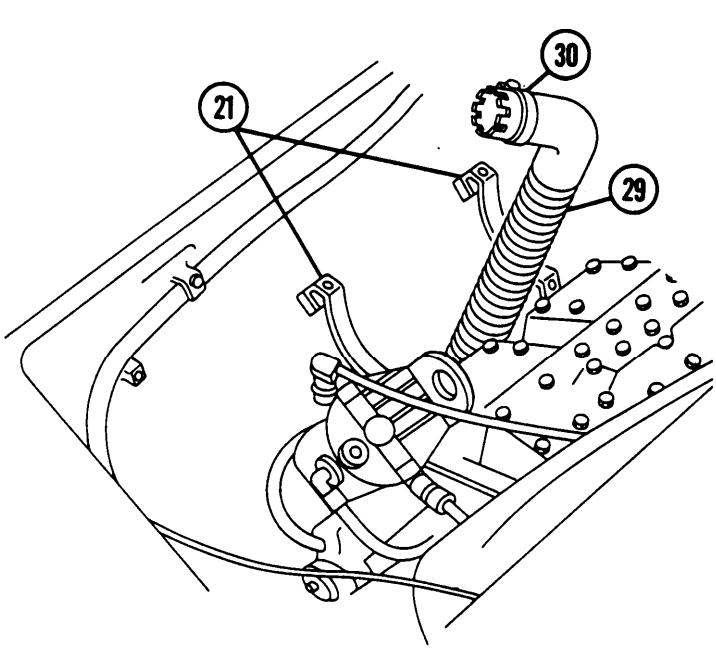


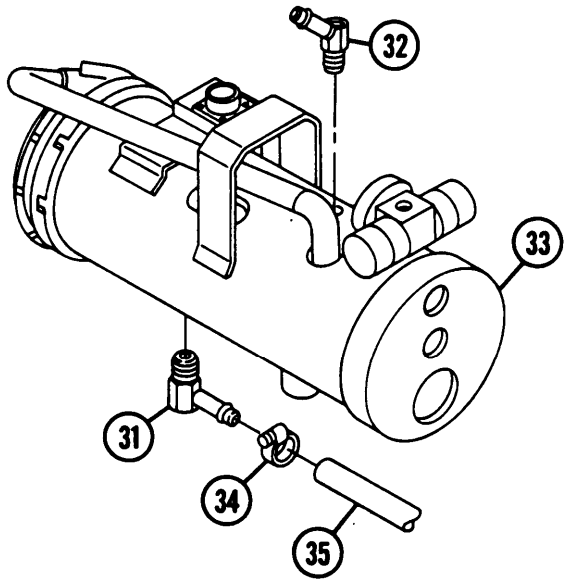


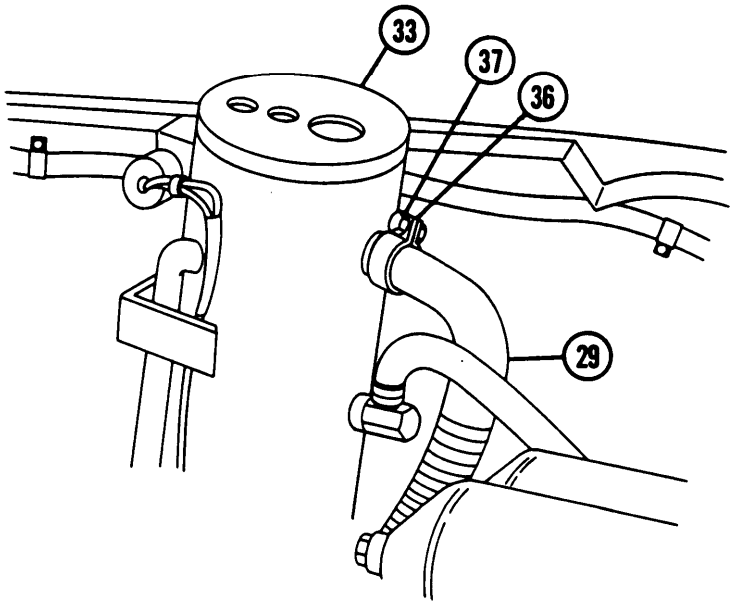

## 10-1 WINTERIZATION KIT INSTALLATION — CONTINUED

**a. Installation — Continued**

18 Place coolant heater assembly (33) on two coolant heater mounting brackets (20) and clamp with four retaining bands (38) and four screws (39).

19 Install four retaining bands (38), two screws (40), two lockwashers (41), and two nuts (42).

20 Install exhaust tube end support bracket (43), three flat washers (44), and three screws (45) to three hull front plate tapping blocks. Close transmission access door to position exhaust tube end. Open door and tighten screws. Install gasket (46).

21 Place clamp (47) on free end of 16-in. (40.6-cm) hose (28), install hose on coolant heater outlet elbow (32), and tighten clamp.

22 Remove heater exhaust cover (48), three screws (49), and three flat washers (50) from inside left transmission access door (51). Lift cover and gasket (52) from outside surface of door.

23 Install exhaust outlet (53) to left transmission access door (51) and install three screws (49), three flat washers (50), and gasket (52).

24 Install exhaust outlet plug (54) in exhaust outlet (53).

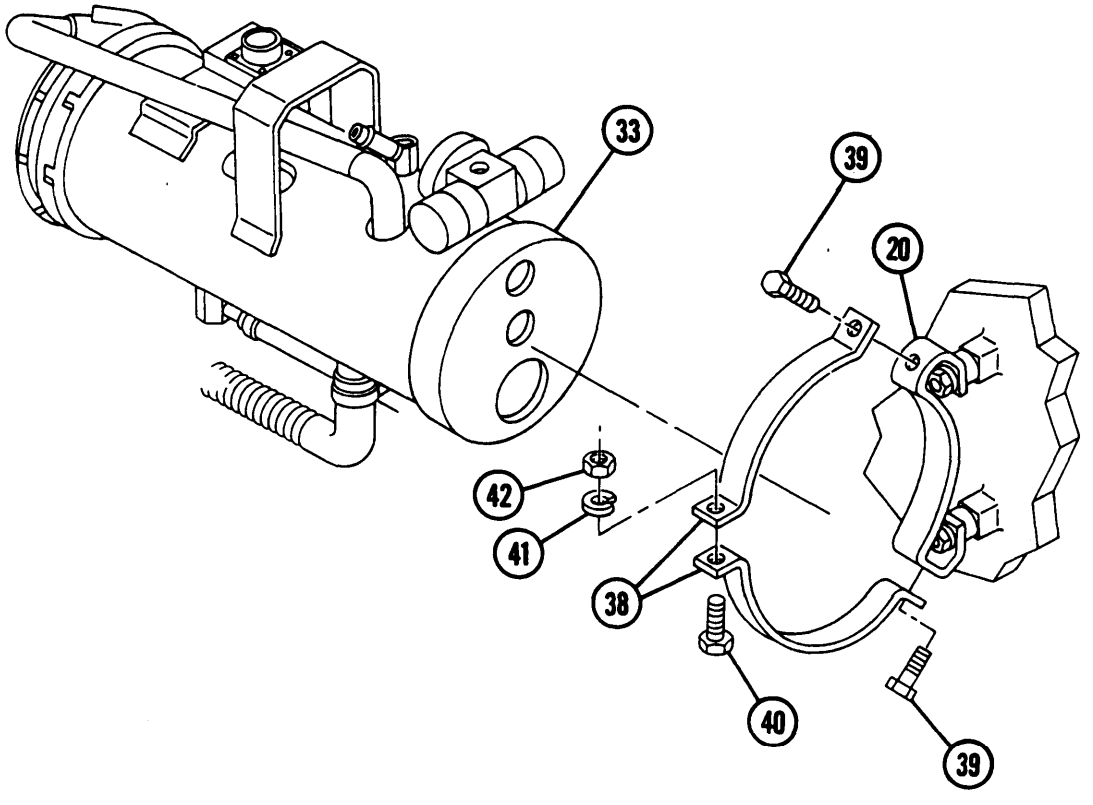

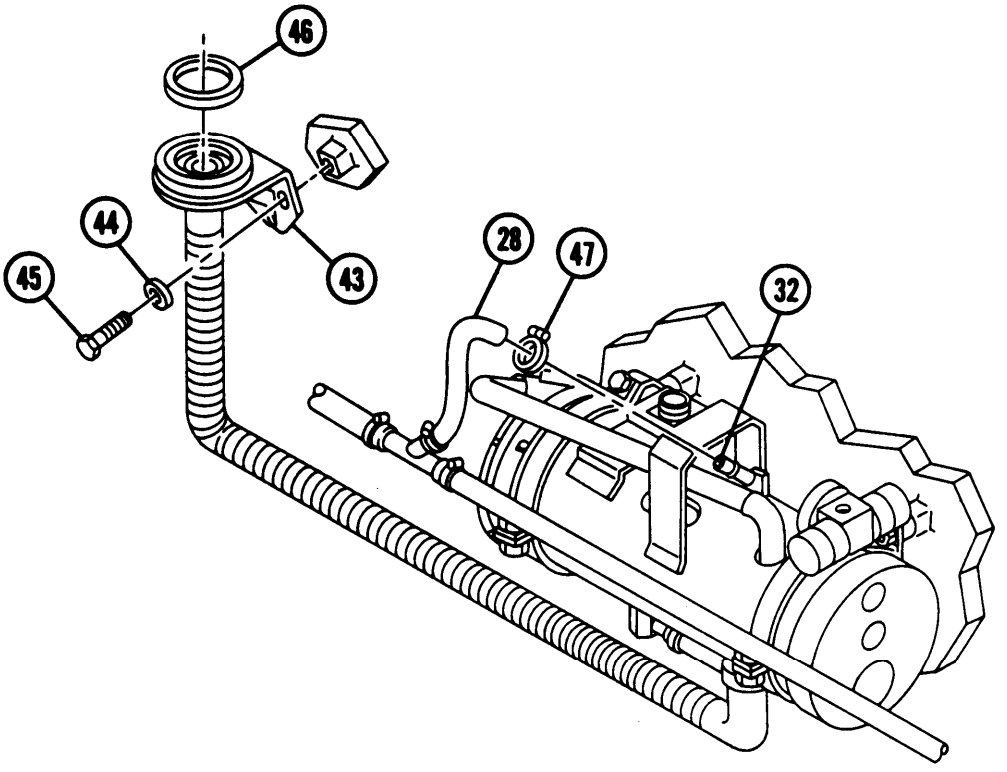
46
44
45
43
28
47
32

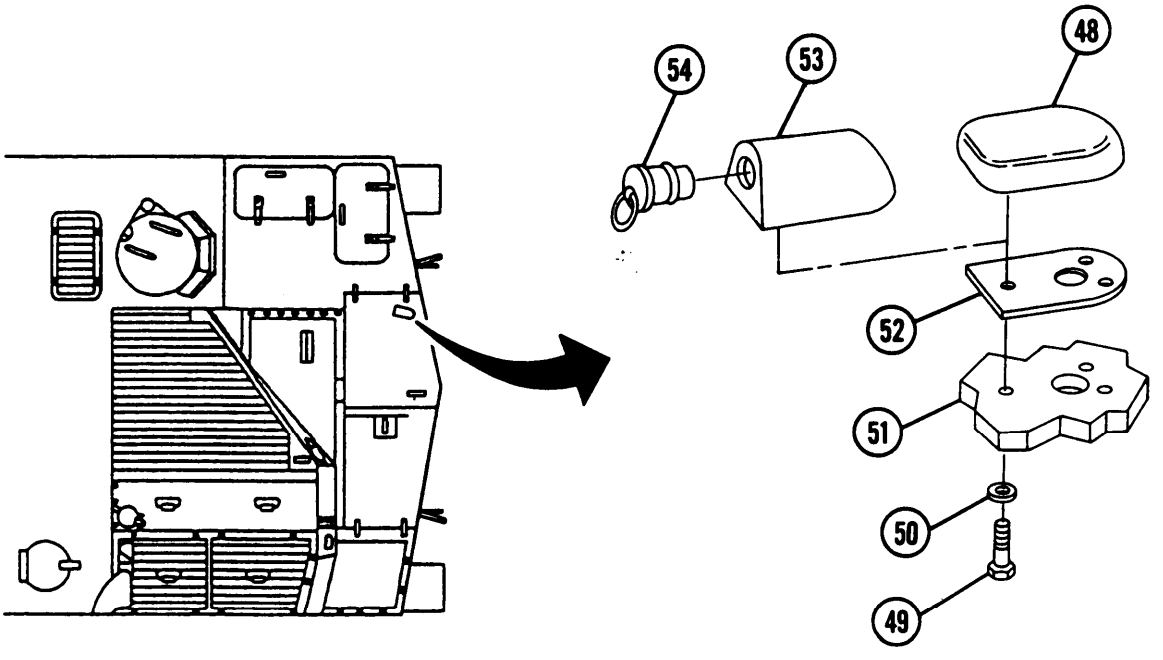
54
53
48
52
51
50
49

## 10-1 WINTERIZATION KIT INSTALLATION — CONTINUED

**a. Installation — Continued**

**CAUTION**

Plug must be removed from exhaust outlet before operating winterization kit to avoid damaging vehicle.

25 Remove three screws (55) from engine coolant pump inlet adapter (56). Discard screws.

26 Position pump (57) and inlet adapter (56) against base bracket (58) so pump suppressor (59) is 30° forward from vertical position (to clear hull front plate) and install three screws (60) and three lockwashers (61).

27 Place cured bracket (62) over pump (57) and install curved bracket, two screws (63), two flat washers (64), and two nuts (65) to base bracket (58).

**NOTE**

Lockwashers maybe installed on any two screws to ground pump on hull.

28 Install pump assembly (68), base bracket (58), four screws (67), two flat washers (68), and two lockwashers (69) to hull front plate (21).

29 Install hose clamp (70) to free end of 0.625-in. - (15.9-mm-) id by 18-in. - (45.7-cm-) long hose (35). Install hose to coolant pump outlet (71) and tighten clamp. Cut hose as required.

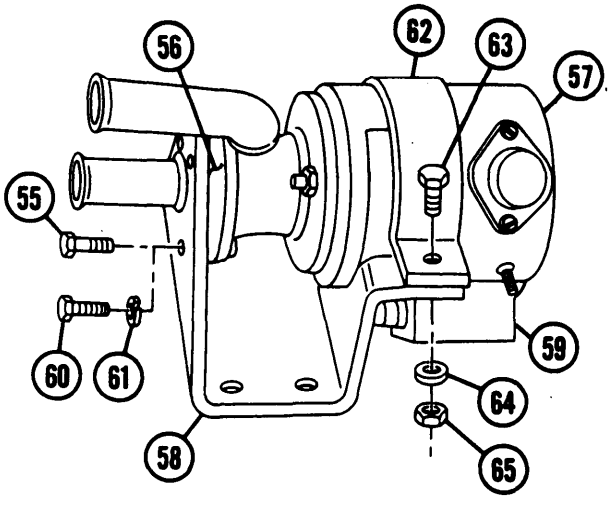


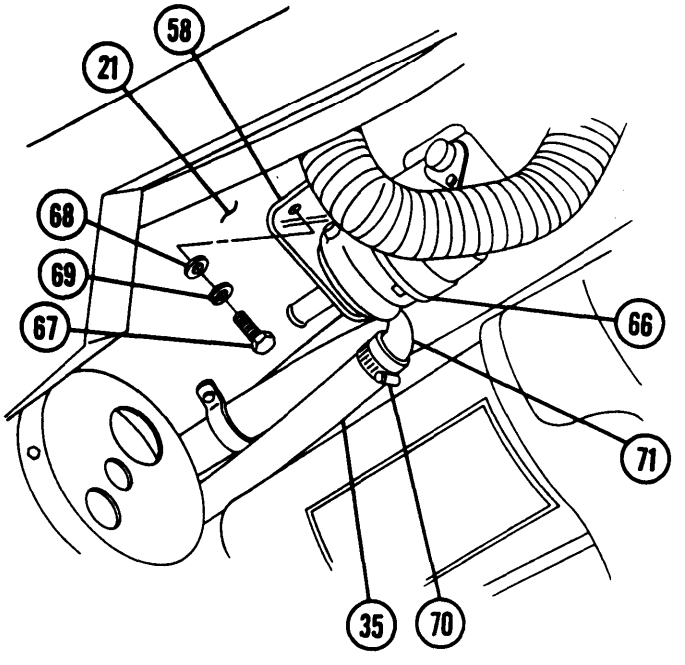

30 Install elbow (72) and adapter (73) to fuel filter (74) inlet and outlet openings.

31 Install fuel filter (74) with elbow (72) and adapter (73) to bracket (75) with two screws (76), two flat washers (77), and two nuts (78).

32 Install two adapters (79 and 80) and two nuts (81) to electric fuel pump outlet opening (83) and inlet opening (82).

33 Install two shock mounts (84), two nuts (85), and two flat washers (86) to bracket (75). Install electric fuel pump (87) and two nuts (88) to shock mounts and install lockwasher (89) and flat washer (90) to secure pump and ground strap (91 ). Install fuel tube (92) between elbow (72) and fuel pump body inlet adapter (80).

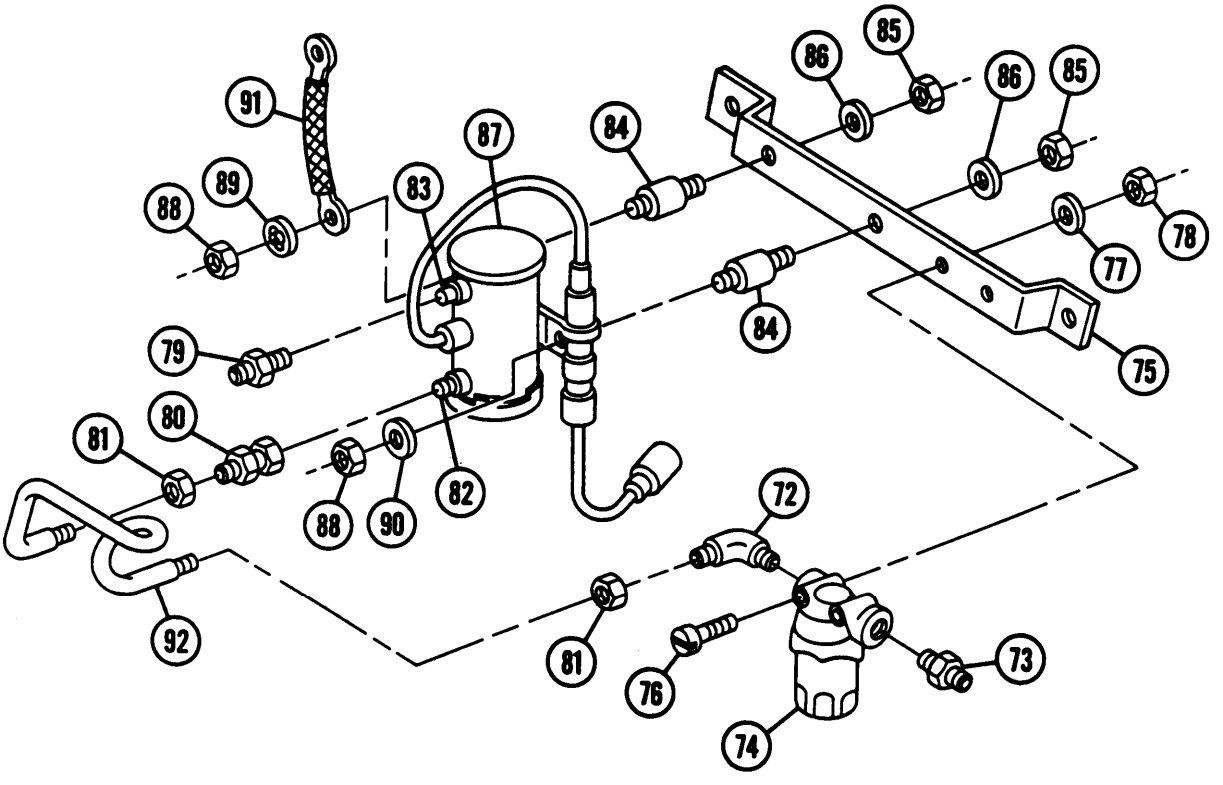

## 10-1 WINTERIZATION KIT INSTALLATION — CONTINUED

**a. Installation — Continued**

**NOTE**

Install Iockwasher between ground strap and screw head.

34 Install bracket (75) with fuel filter (74), electric fuel pump (87), and ground strap (91) to hull front plate (21) using Iockwasher (93), flat washer (94), and two screws (95).

35 Remove plug from right engine coolant manifold (96) and install elbow (97).

36 Install hose clamp (98) to 0.625- in.- (1 5.9-mm-) id by 78-in. - (1.98-m-) long hose (99). Install hose to elbow (97) and tighten clamp.

37 Install hose clamp (100) to 0.625-in. - (1 5.9-mm-) id by 60-in. - (1.52-m-) long coolant hose (101). Install hose to engine coolant pump inlet adapter (56) and tighten clamp. Install engine primary fuel filter-to-coolant heater fuel filter hose to filter inlet adapter (73).

**NOTE**

Secure hoses in steps 38 and 39 to transmission with strap material using transmission screws and washers.

38 Place coolant manifold hose (99) along side and front of transmission and connect to battery heater inlet tube (102). Trim hose to fit and install to heater inlet tube with hose clamp (103).

39 Place coolant hose (101) along front of transmission and connect to battery heater outlet tube (104). Trim hose to fit and install to heater outlet tube with hose clamp (1 05).

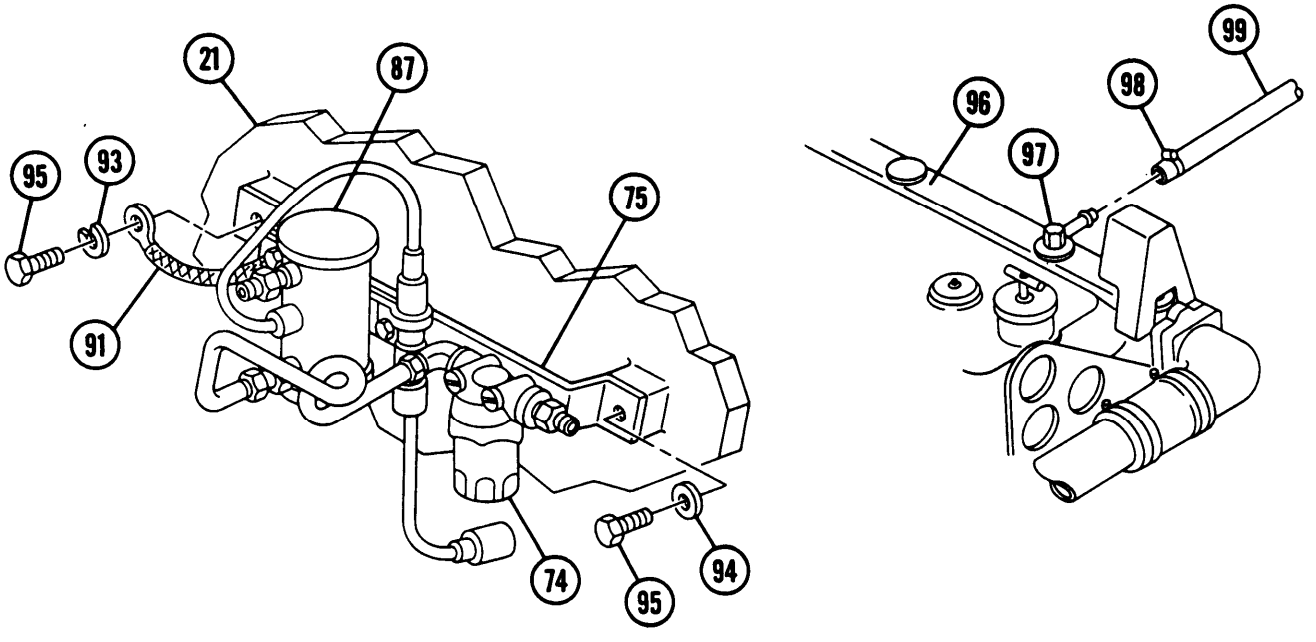

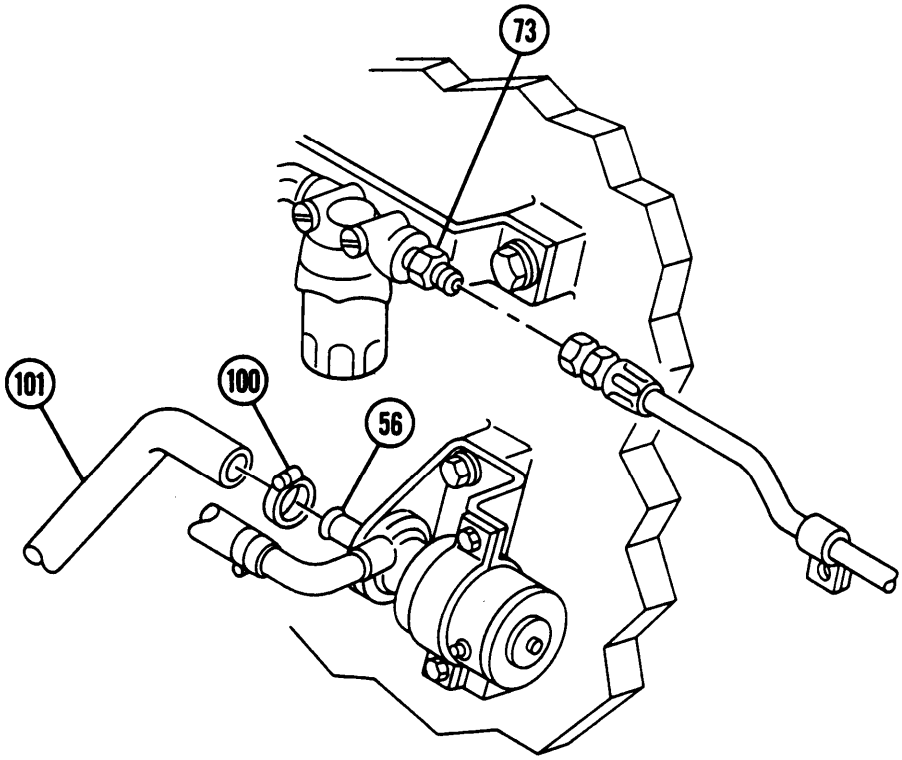
73
101
100
56

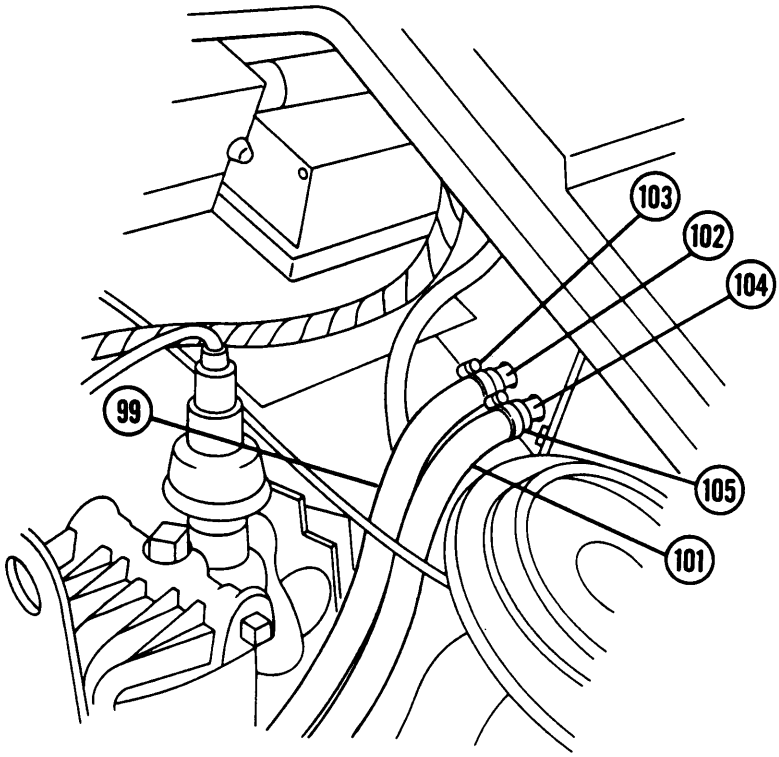
103
102
104
99
105
101

## 10-1 WINTERIZATION KIT INSTALLATION — CONTINUED

**a. Installation — Continued**

40 Remove engine access door in driver's compartment (TM 9-2350-311-20-1). Disconnect fuel main supply hose at quick-disconnect coupling (106) on primary fuel filter (107).

41 Remove plug (108) on primary fuel filter top inlet opening and install elbow (109).

42 Place coolant heater fuel filter-to-primary fuel filter hose (110) along left side of powerplant compartment and install to primary fuel filter inlet elbow (109).

43 Use screws, washers, and strap material to secure fuel hose (1 10) at three places on powerplant.

44 Install elbow (111) at heater fuel control valve (112) inlet opening. Connect fuel pump-to-fuel control valve tube (113) to control valve inlet elbow and install at heater fuel pump inlet opening (82).

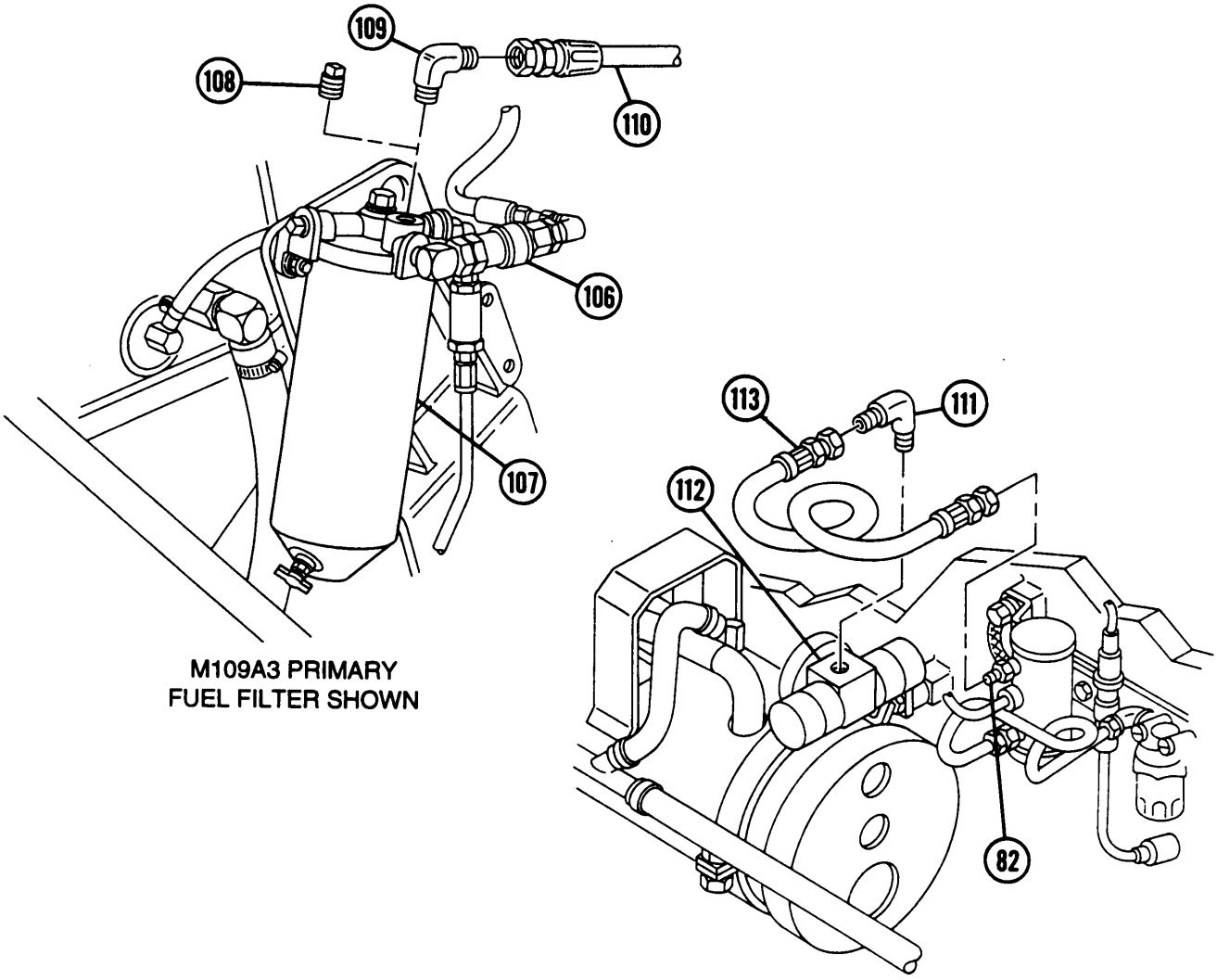


M109A3 PRIMARY FUEL FILTER SHOWN

**NOTE**

Refer to TM 9-2350-311-20-1 for M109A2 vehicle procedure.

45 Connect fuel main supply hose (114) to primary filter quick-disconnect coupling (106). Install engine access door in driver's compartment.

46 Remove four screws (115) and four lockwashers (116). Discard screws.

47 Remove four nuts (117) and gasket (118) covering opening in driver's compartment bulkhead (119).

48 Install coolant heater harness (120) and coolant heater harness receptacle (121), four screws (122), four lockwashers (116), and four nuts (117).

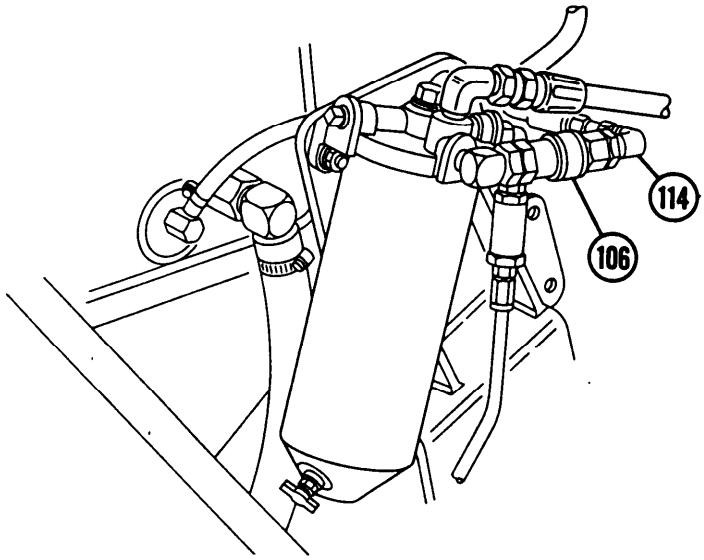


M109A3 PRIMARY
FUEL FILTER SHOWN

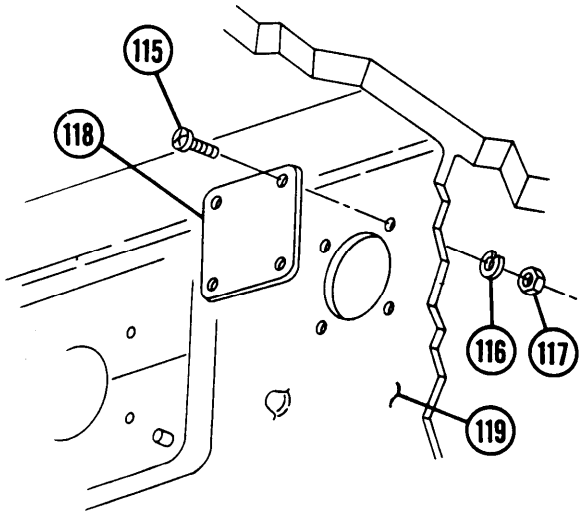


DRIVER'S COMPARTMENT

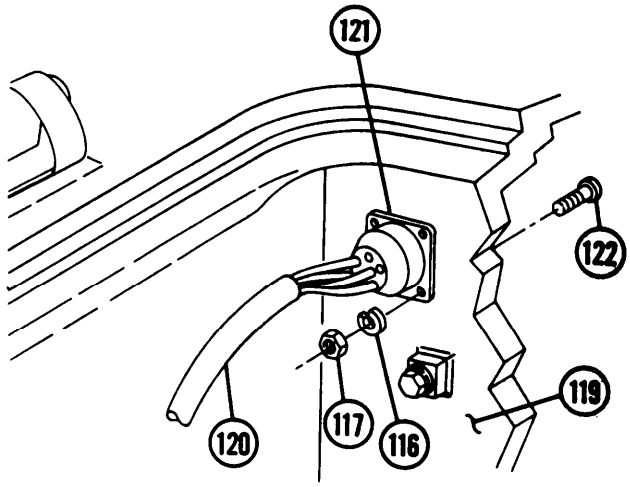


REAR OF BATTERY
COMPARTMENT

## 10-1 WINTERIZATION KIT INSTALLATION — CONTINUED

**a. Installation — Continued**

49 Connect coolant heater harness plug (123) to heater receptacle (1 24).

50 Connect harness lead (125) connector to heater coolant pump. Support harness lead with right headlight group support strap.

51 Connect harness lead (circuit 402C) (126) to electric fuel pump connector.

52 Remove mounting screw (127) from coolant heater mounting bracket (20) and install harness ground lead (128).

53 Remove two screws (129) and remove cover (130) from winterization kit heater control box (131 ).

**NOTE**

Harness receptacle must face down. Reposition if necessary (para 10-2).

54 Remove two nuts (132) and two lockwashers (133), place mounting bracket (134) on screws (135), and install two nuts and two lockwashers.

55 Install two screws (129) to cover (130).

56 Install mounting bracket (134), strap, control box (131), two flat washers (136), and two screws (137) to driver's compartment bulkhead tapping blocks (above engine compartment access door).

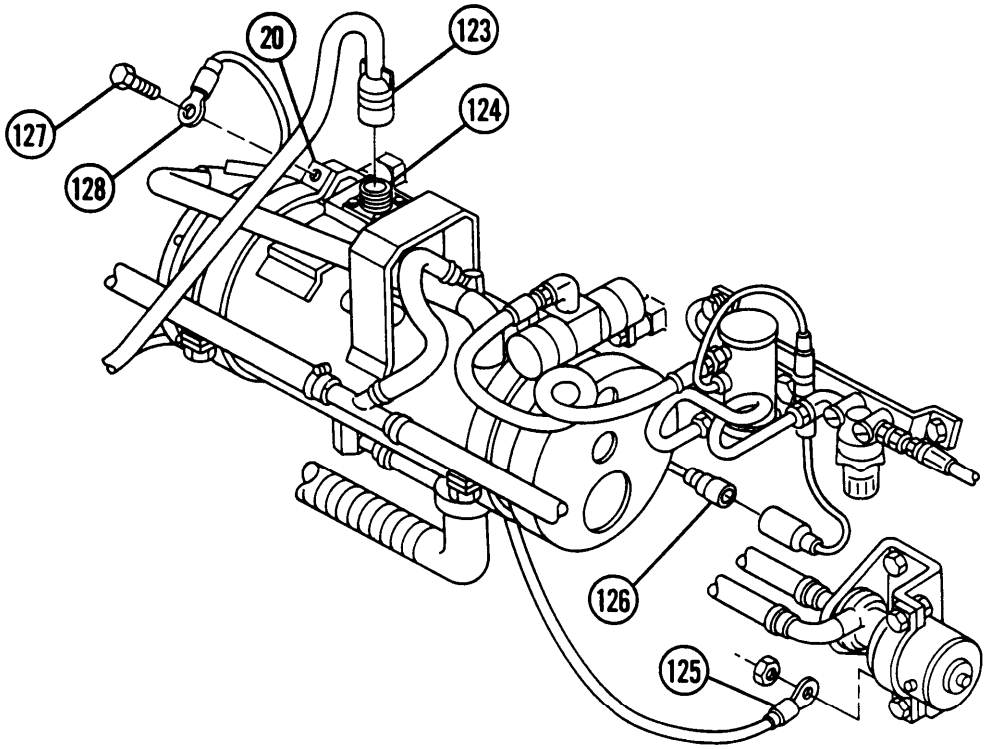

57 Connect control box-to-driver's compartment harness plug (138) at control box receptacle (139). Connect harness branch lead (140) to box lead connector (141).

58 Connect control box-to-driver's compartment harness plug (142) to coolant heater harness receptacle (121 ) in driver's compartment bulkhead (119).

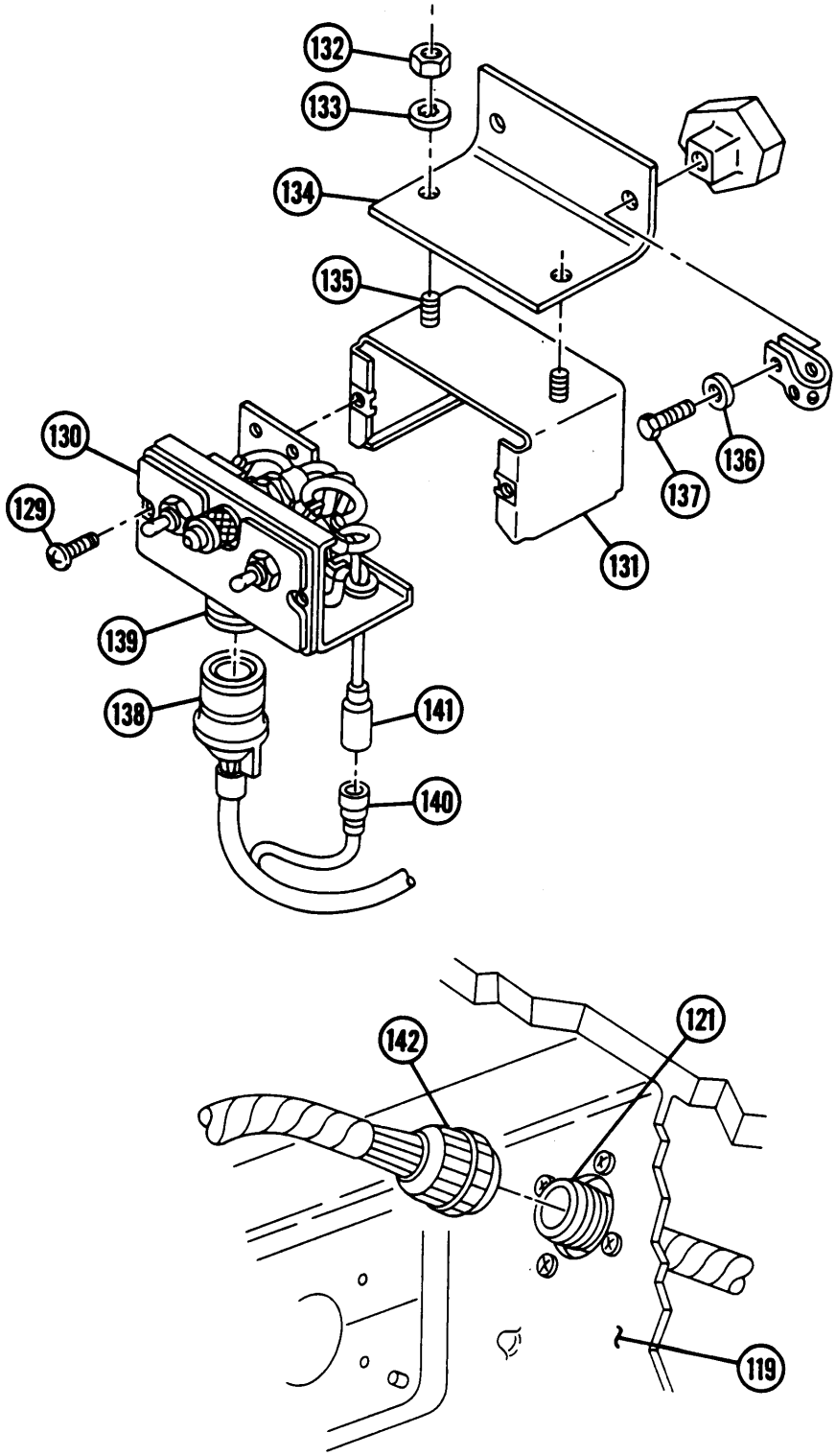

## 10-1 WINTERIZATION KIT INSTALLATION — CONTINUED

### a. Installation — Continued

**NOTE**

- For vehicle circuitry incorporating the 3-position MASTER switch (one position marked SLAVE), disconnect vehicle harness lead 459B at MASTER switch and connect kit harness branch labeled 459B between MASTER switch and vehicle harness lead 459B.

- Steps 59 thru 61 apply to vehicles with engine model 7083-7396. Steps 62 thru 64 apply to vehicles with engine model 7083-7391.

59 Disconnect existing lead 459B (143) at rear of portable instrument panel (144) MASTER switch (145) (TM 9-2350-311-20-1).

60 Connect branch lead 459B (146) of control box-to-driver's compartment wiring harness (147) to rear of MASTER switch (145).

61 Connect existing lead (143) to other lead of control box-to-driver's compartment lead 459B (146) or existing lead of 459B (143).

62 Disconnect bulkhead-to-portable instrument-panel wiring harness lead 486A (148) from GLOW PLUG switch (153) behind driver's instrument panel.

63 Connect winterization heater control box-to-driver's compartment harness lead 400 (150) to bulkhead-to-portable instrument panel wiring harness lead 486A (148).

64 Connect winterization heater control box-to-drivers compartment harness lead 400 (150) to GLOW PLUG switch (149).

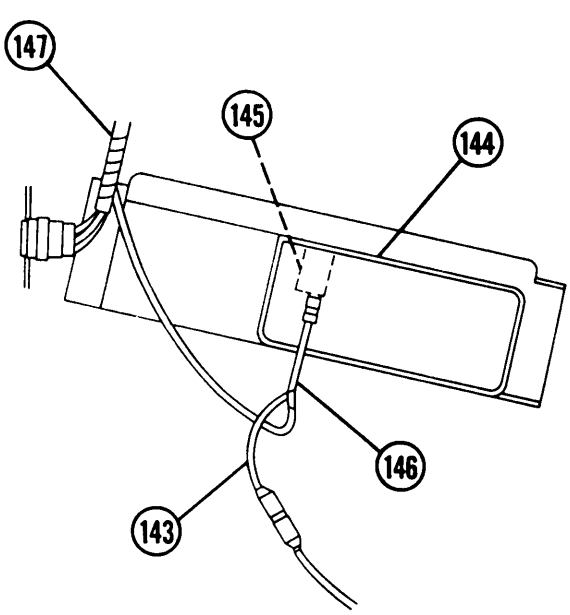


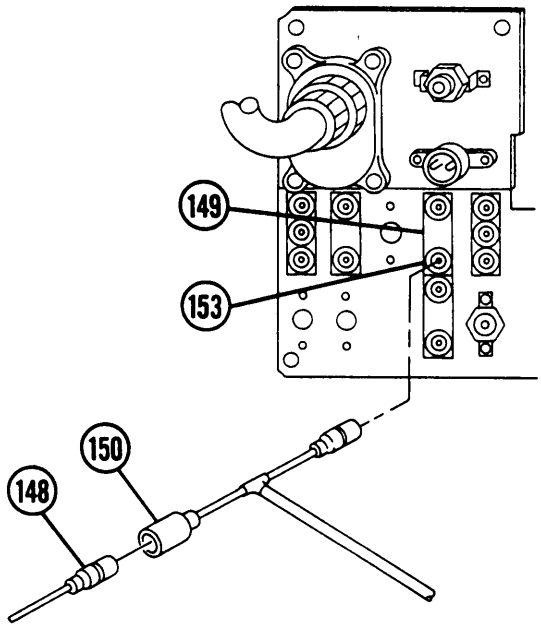

65 Install two battery jumper leads (151) on battery terminals and tighten lugs (152, 153, and 154).

66 Place grommet (155) over front battery ground lead (1 56), slide grommet over lead, and position in slot on front battery winterization box.

67 Install front battery ground lead (156) on battery B negative terminal and tighten lug.

68 Place grommet (157) on master relay lead (158) and install lead. Install battery connector lead (circuit 81) (159) on battery A positive terminal and tighten lug.

69 Install rear battery ground lead (160) on battery D negative terminal and tighten lug.

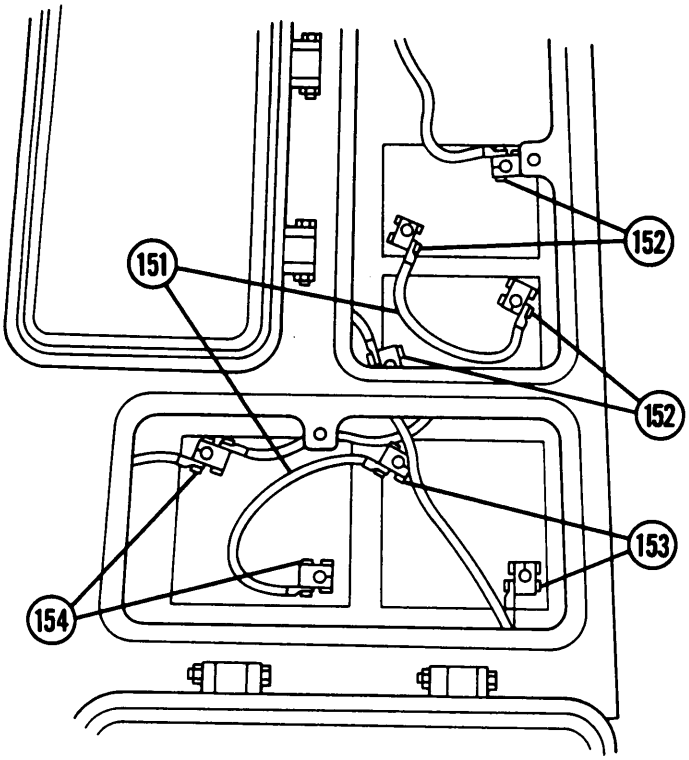


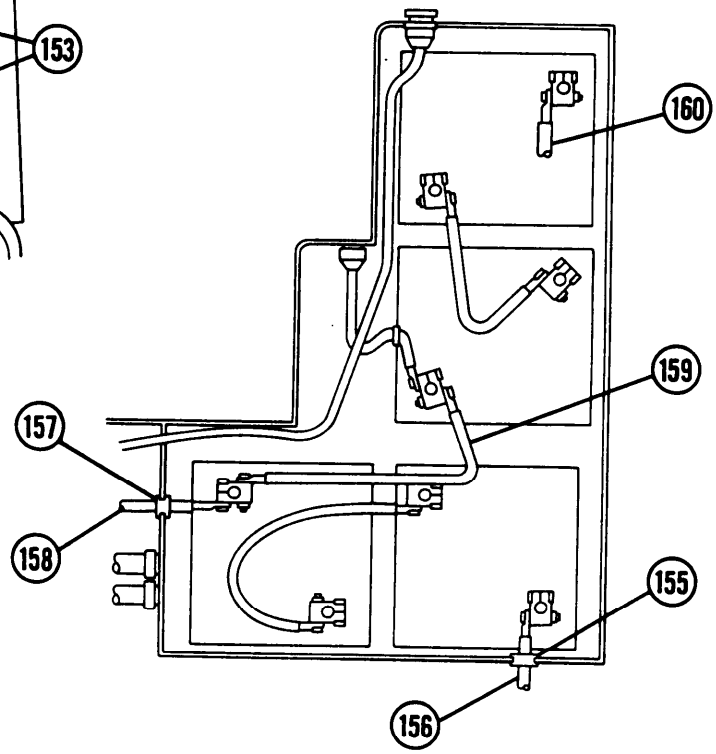

## 10-1 WINTERIZATION KIT INSTALLATION — CONTINUED

**a. Installation — Continued**

70 Slide rear insulation blanket (161) over batteries. Guide free end of rear battery ground lead (circuit 7) (160) through grommet (162) in blanket and position rear of blanket under rear winterization box tab (163).

71 Place front insulation blanket (164) over batteries, position outer side of blanket under rear winterization box side tab (165) and position slot on inner side of blanket over stud (166) on front box. Install flat washers (167) and wing nut (168) to stud.

72 Install rear battery ground lead (circuit 7) (160) to bulkhead with two existing screws and two lockwashers. Reroute left headlight wiring harness (169) and place on top of two blankets (161 and 164).

73 Check plug (170) to ensure installation in petcock valve (171) of lower main coolant tube.

74 Bleed coolant system.

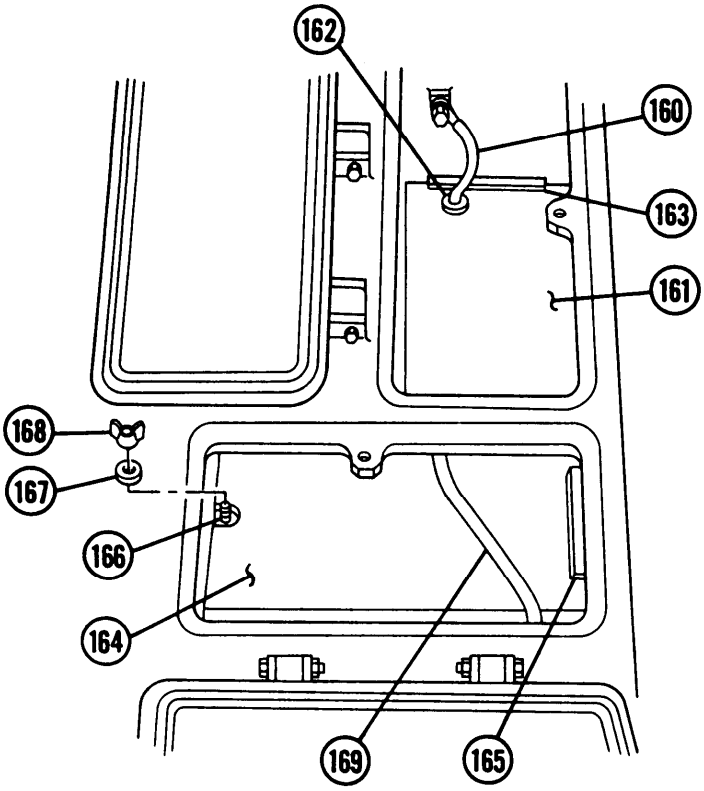


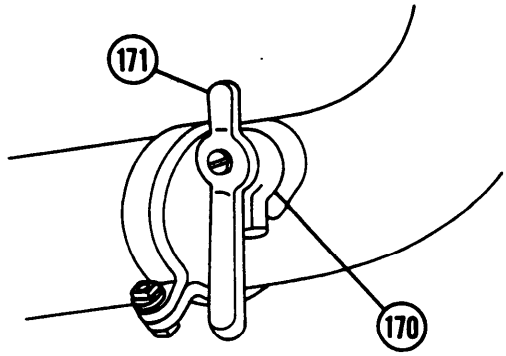

75 Place holddown strip (172) for intake grille tarpaulin (173) on grille to serve as template for screw holes. Mark and remove strip. Drill and tap six 5/1 6-24 UNF-28 holes.

76 Locate 10 footman's loop-type fasteners (1 74) and weld into place (TM 9-237).

77 Install intake grille tarpaulin (173) with straps (175) and webbing down. Install six 5/16-24 by 3/4-in. screws (176) and flat washer (177) in holddown strip (172).

78 Secure intake grille tarpaulin (173) by installing straps (175) to 10 loop-type fasteners (174).

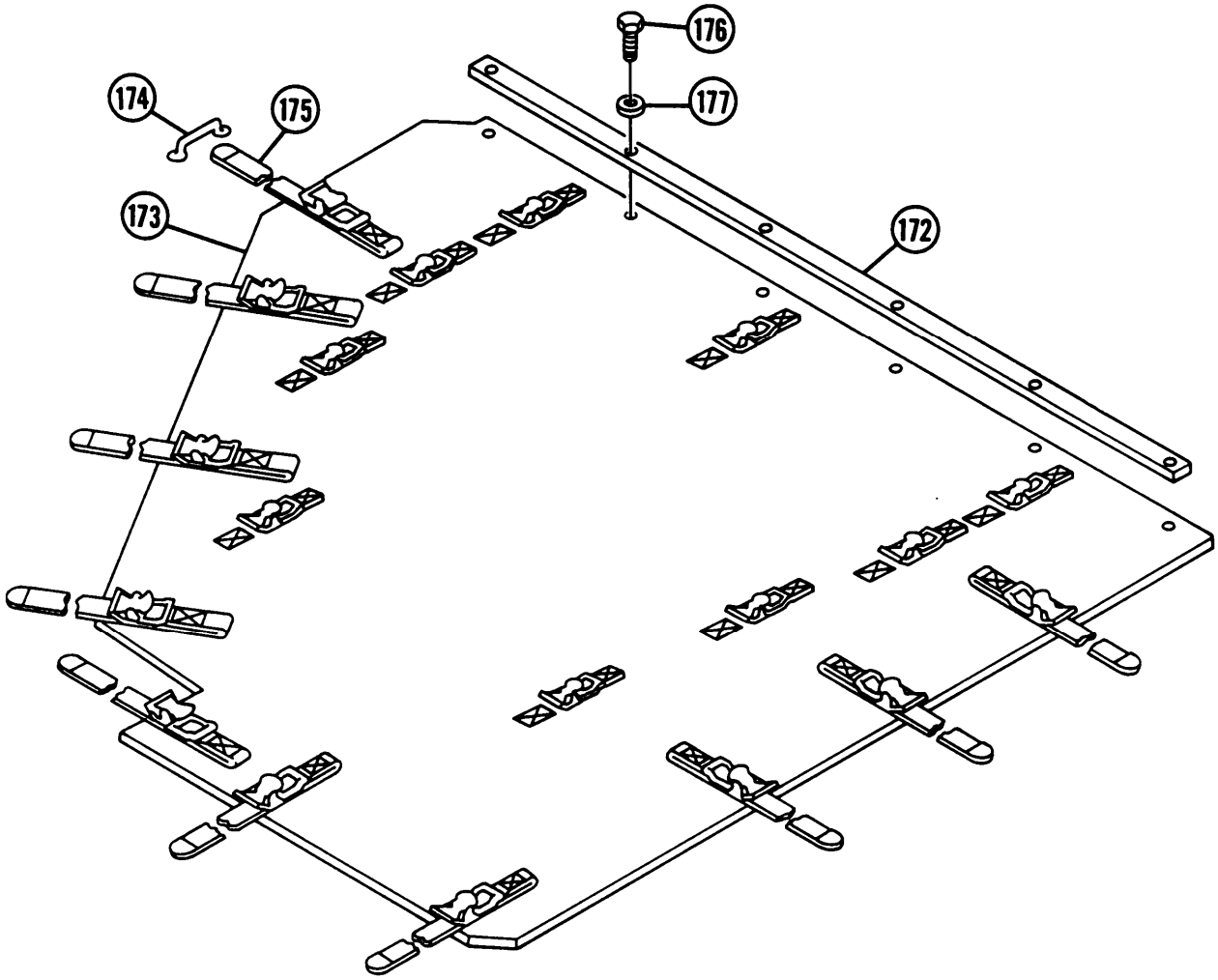

## 10-1 WINTERIZATION KIT INSTALLATION — CONTINUED

### a. Installation — Continued

79 Place exhaust grille tarpaulin (178) holddown strip (179) on grille to serve as template. Locate hole at front of grille and tap six 5/16-24 UNF-28 holes.

80 Locate five loop-type fasteners (180) and weld into position (TM 9-237).

81 Remove four screws (181), install exhaust grille tarpaulin (178) with straps (1 82) up and webbing down, and install five screws (183) and five flat washers (184).

82 Secure exhaust grille tarpaulin (178) by attaching five straps (182) to five loop-type fasteners (180).

83 Before starting engine, unfasten five straps (182) to secure exhaust grille tarpaulin (178). Roil tarpaulin into smallest possible tube form.

84 Secure with three webbing assemblies (185).

85 Unfasten 4, 6, 8, or 10 straps as required. Roil air intake grille tarpaulin (173) inward to smallest possible tube and secure with 3 webbing assemblies (186).

**CAUTION**

Winterization kit installation is now complete; refer to TM9-2350-311 -10 for operating instructions. Kit operation is intended to commence upon engine shutdown after engine temperatures reach normal operating levels. Operation of this kit with engine coolant temperatures less than 0°F (17.8°C) may result in failure of coolant heater.

### b. Bleeding Winterization System

**WARNING**

Coolant is hazardous waste and must be disposed of in accordance with local procedures or direction of the local Hazardous Waste Management office.

1 Disconnect kit coolant hose at elbow on engine-bank right coolant manifold.

2 Temporarily plug elbow, place disconnected coolant hose end in suitable container, and fill radiator (TM 9-2350-311-10).

**NOTE**

Do not overdrain coolant system. Return drained coolant to radiator as required, then continue air bleed procedure. Air bleed should always be performed after removal or replacement of coolant heater or any coolant line.

3 Start engine and run for short period of time, observing flow of air and coolant out of disconnected hose. Continuous flow of coolant without air bubbles indicates air bleed accomplished.

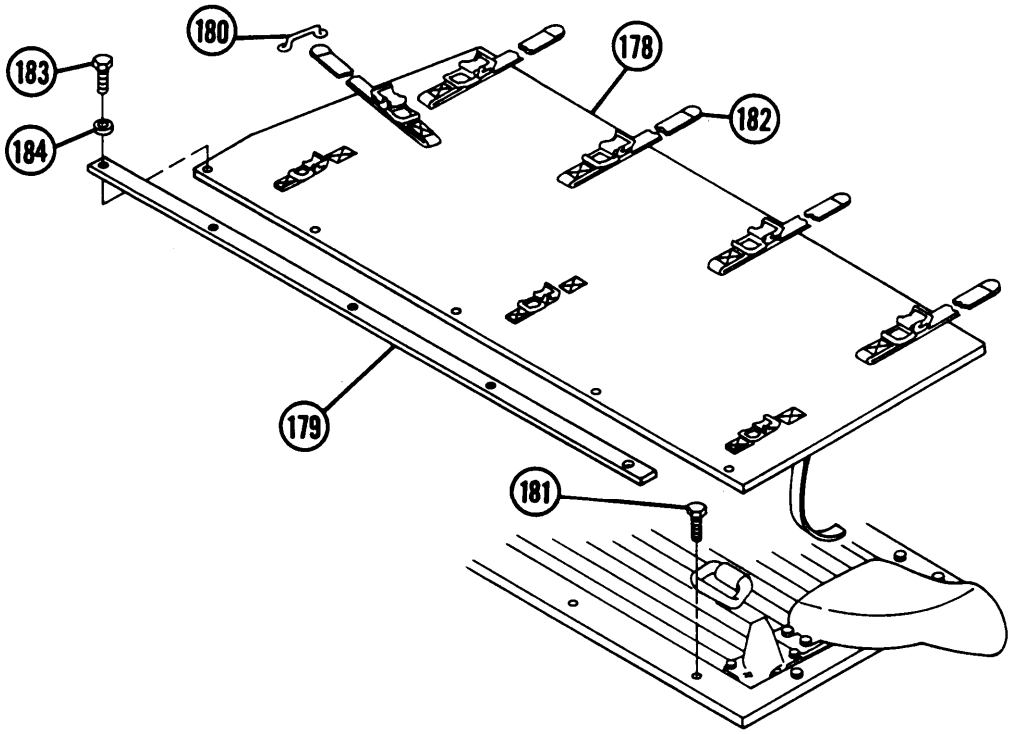


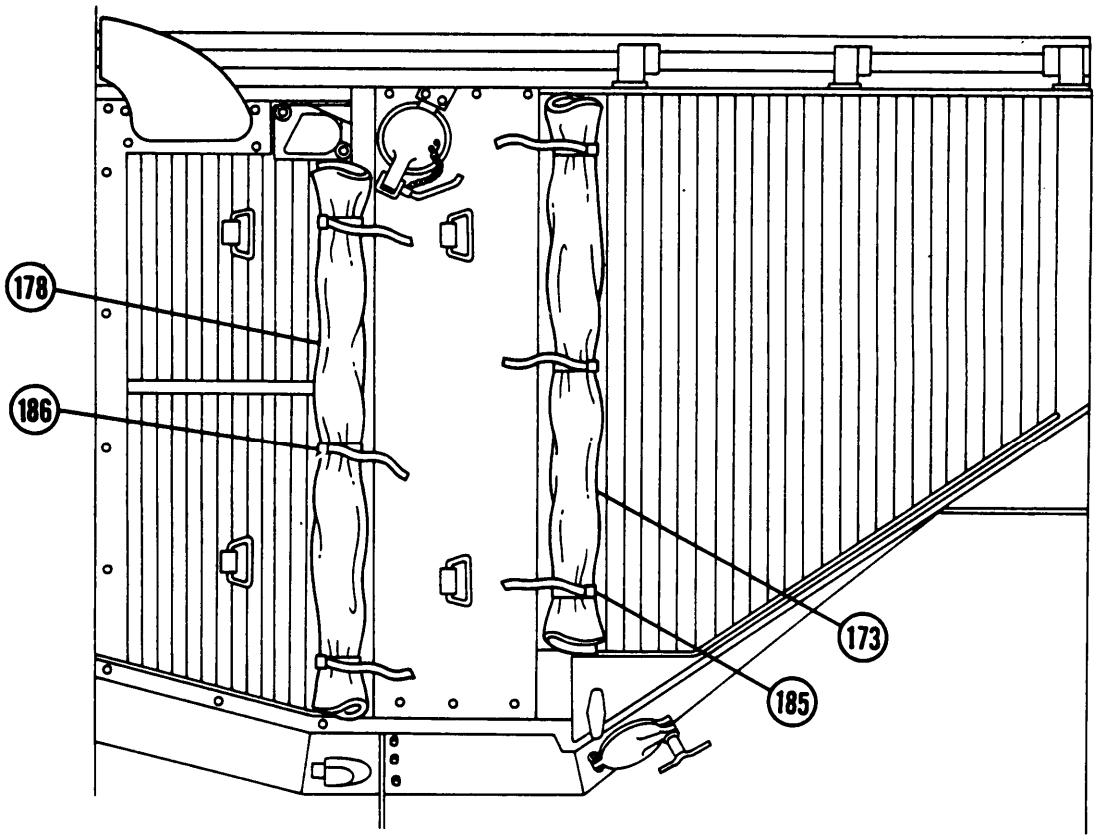


**NOTE**

FOLLOW-ON MAINTENANCE: Refill cooling system (TM 9-2350-311-20-1)

## SECTION II. WINTERIZATION KIT COMPONENTS

## 10-2 COOLANT HEATER

This task covers: a. Disassembly b. Assembly

**INITIAL SETUP**

**Tools**
General mechanic's tool kit (item 14, Appx C)
Riveter (item 18, Appx C)

**Materials/Parts**
Blind rivets (4) (item 75, Appx F)
Compression sleeve (item 72, Appx F)
Gasket (item 73, Appx F)
Gasket (item 82, Appx F)
Lockwasher (item 26, Appx F)
Lockwasher (item 30, Appx F)
Nuts (2) (item 76, Appx F)
Preformed packing (item 51, Appx F)
Preformed packing (item 52, Appx F)
Screws (4) (item 74, Appx F)
Screws (3) (item 88, Appx F)
Straps (3) (item 22, Appx F)

**Equipment Conditions**
Engine coolant heater removed (TM 9-2350-311 -20-1 )

### a. Disassembly

1 Remove four screws (1) and guard assembly (2).

2 Remove nut (3), tube (4), and two elbows (5 and 6).

3 Disconnect lead (7) from terminal strip (8).

4 Loosen four nuts (9).

5 Turn blower motor assembly (10) counterclockwise and pull off engine coolant heater assembly (11).

6 Remove four assembled screws (12) and receptacle (13) from bracket (14). Discard assembled screws.

7 Disconnect ground lead (15) from housing (16).

8 Disconnect lead (17) from restriction thermostat (18).

9 Disconnect lead (19) from overheat thermostat (20).

10 Disconnect two leads (21 and 22) from flame detector switch (23).

11 Remove three tiedown straps (24) from five receptacle leads (15, 17, 19, 21, and 22). Discard tiedown straps.

12 Remove sleeve (25) from five receptacle leads (15, 17, 19,21, and 22).

13 Remove receptacle (13) from engine coolant heater assembly (11 ).

14 Remove five screws (26) and three leads (27, 28, and 29) from flame detector switch (23).

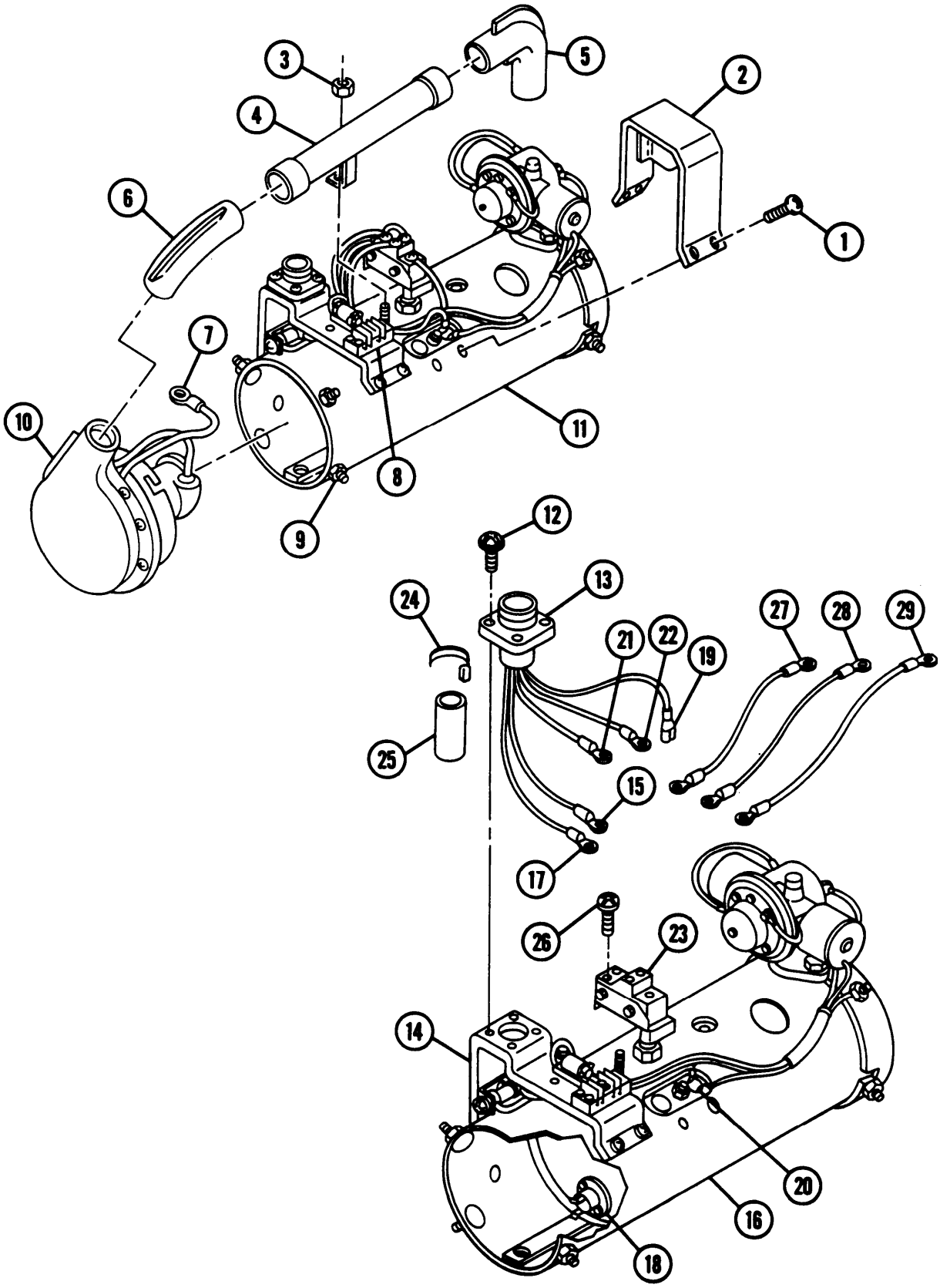
1
2
3
4
5
6
7
8
9
10
11
12
13
14
15
16
17
18
19
20
21
22
23
24
25
26
27
28
29

## 10-2 COOLANT HEATER — CONTINUED

**a. Disassembly — Continued**

**CAUTION**

Use caution when removing compression sleeve from steel tube of flame detector switch. Compression sleeve will normally be seated against probe. Failure to comply will result in equipment damage.

15 Loosen nut (30) and remove flame detector switch (23).

16 Remove compression sleeve (31) and nut (30). Discard compression sleeve.

17 Disconnect two leads (32 and 33) from connector (34) on overheat thermostat (20).

18 Disconnect lead (35) from terminal strip (8).

19 Loosen nut (36).

20 Remove two screws (37) and fuel control valve (38) from bracket (39) and fuel tube (40).

21 Remove two screws (41) and bracket (39).

22 Disconnect lead (42) from overheat thermostat (20).

23 Remove nut (43), lockwasher (44), and retainer (45). Discard lockwasher.

24 Remove overheat thermostat (20), connector (34), flat washer (46), and preformed packing (47). Discard preformed packing.

25 Loosen four nuts (48) and remove end plate (49).

26 Remove assembled screw (50), lead (51), and lockwasher (52) from igniter (53). Discard assembled screw and lockwasher.

27 Remove two nuts (54) and preheat resistor (55).

28 Remove igniter (53) and gasket (56). Discard gasket.

29 Remove two screws (57).

30 Leave flange (58) loose on fuel tube (40) and remove tapping plate (59).

31 Remove two assembled screws (60), two nuts (61), and cable (62). Discard assembled screws.

32 Remove fuel tube (40) and resistor (55) as an assembly.

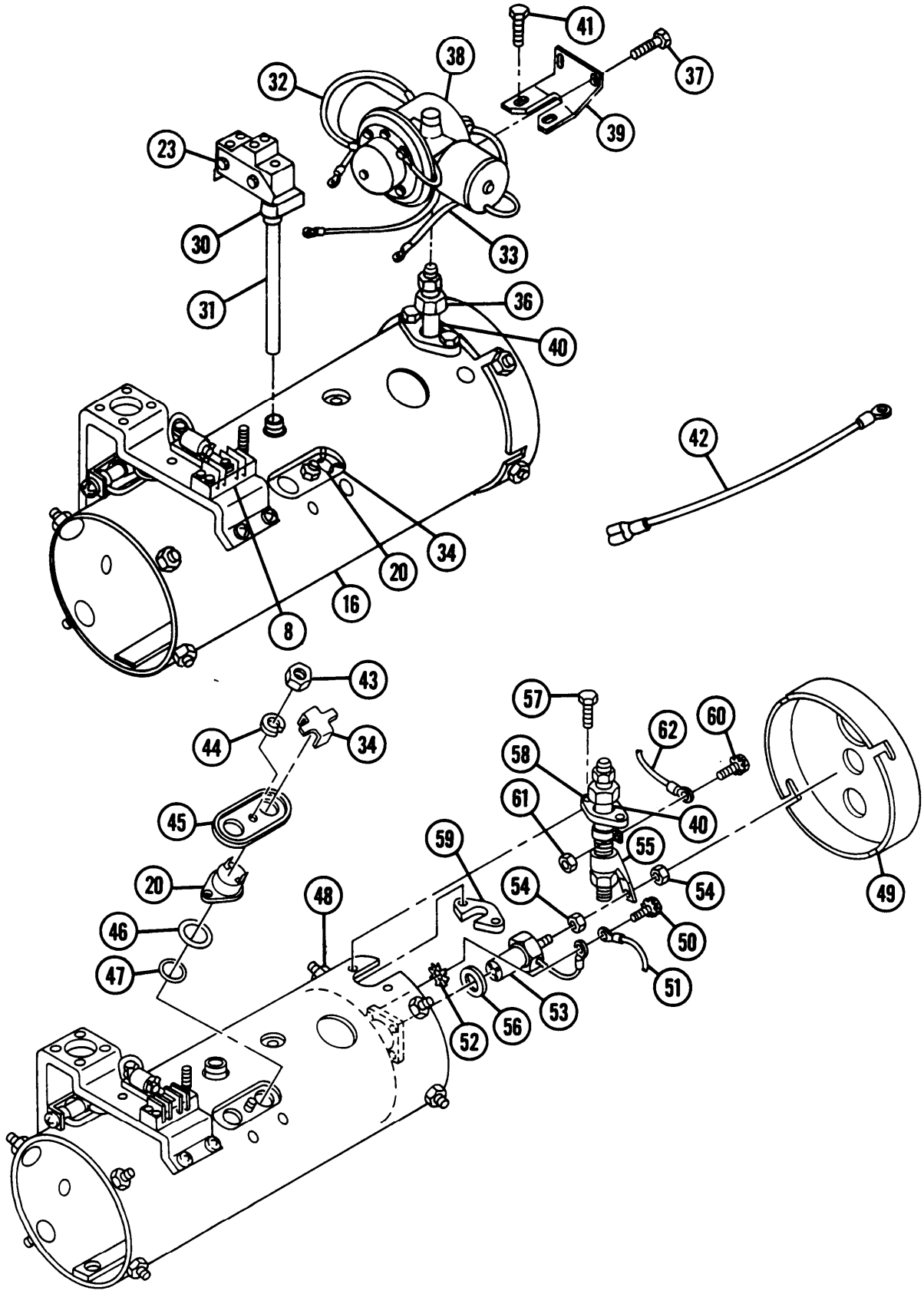
41
38
37
32
39
23
30
33
31
36
40
42
34
20
16
8
43
57
62
60
44
34
58
61
40
45
59
55
20
48
54
54
49
46
50
47
51
53
56
52

## 10-2 COOLANT HEATER — CONTINUED

**a. Disassembly — Continued**

**CAUTION**

Compression sleeve is to be removed only if resistor requires replacement.
Compression fitting is pressed securely to fuel tube and must be cut or ground off.

**NOTE**

Compression sleeve must be removed before removing resistor from fuel tube.

33 Remove union (63), compression sleeve (64), nut (36), resistor (55), and flange (58). Discard compression sleeve.

34 Remove two nuts (65), two clamps (66), and two hook bolts (67), securing burner assembly (68) to heat exchanger (69).

35 Remove burner assembly (68), preformed packing (70), and gasket (71). Discard preformed packing and gasket.

36 Remove four screws (72) and bracket (14).

**NOTE**

Note direction of arrow on diode to ensure proper positioning during assembly.

37 Remove diode (73) from diode holder (74).

38 Remove two screws (75 and 76) and diode holder (74).

39 Remove four screws (77), terminal strip (8), and marker strip (78).

40 Remove nut (79) and bracket (80) with resistor motor (81) attached.

41 Remove nut (82), screw (83), and resistor motor (81).

42 Remove two assembled nuts (84), two flat washers (85), restriction thermostat (1 8), and two spacers (86). Discard nuts.

43 Remove three screws (87).

44 Spread housing (16) and remove heat exchanger (69).

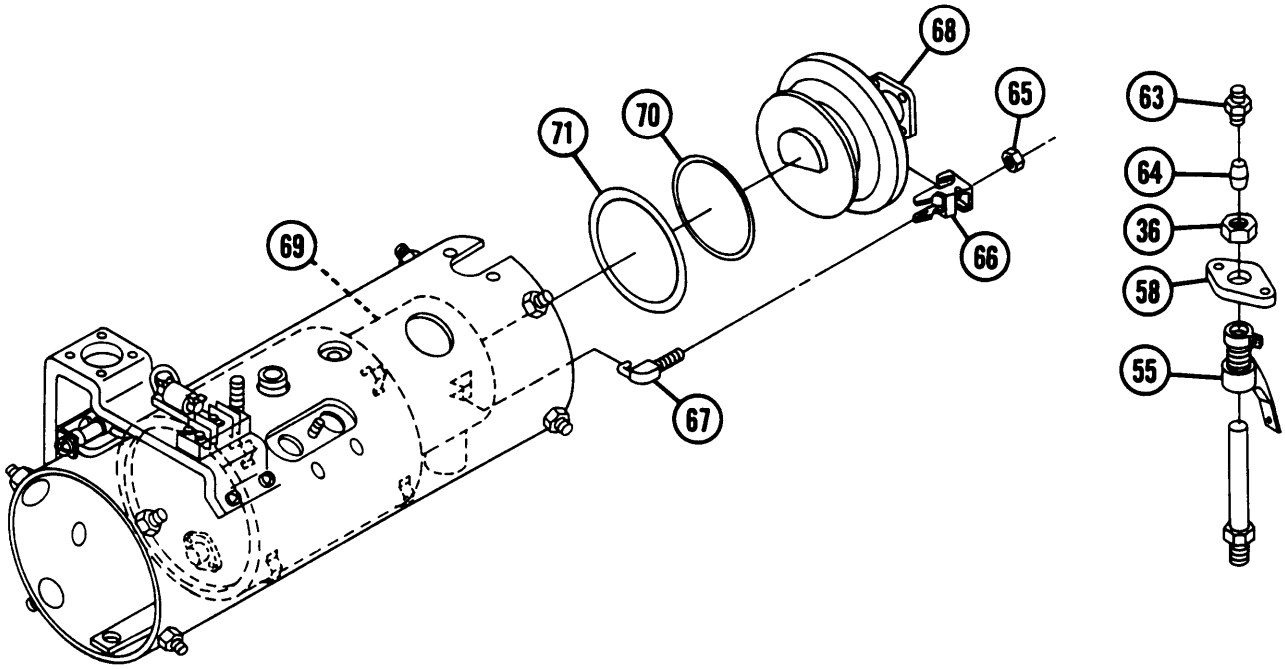
68
65
63
71
70
64
36
69
66
58
55
67

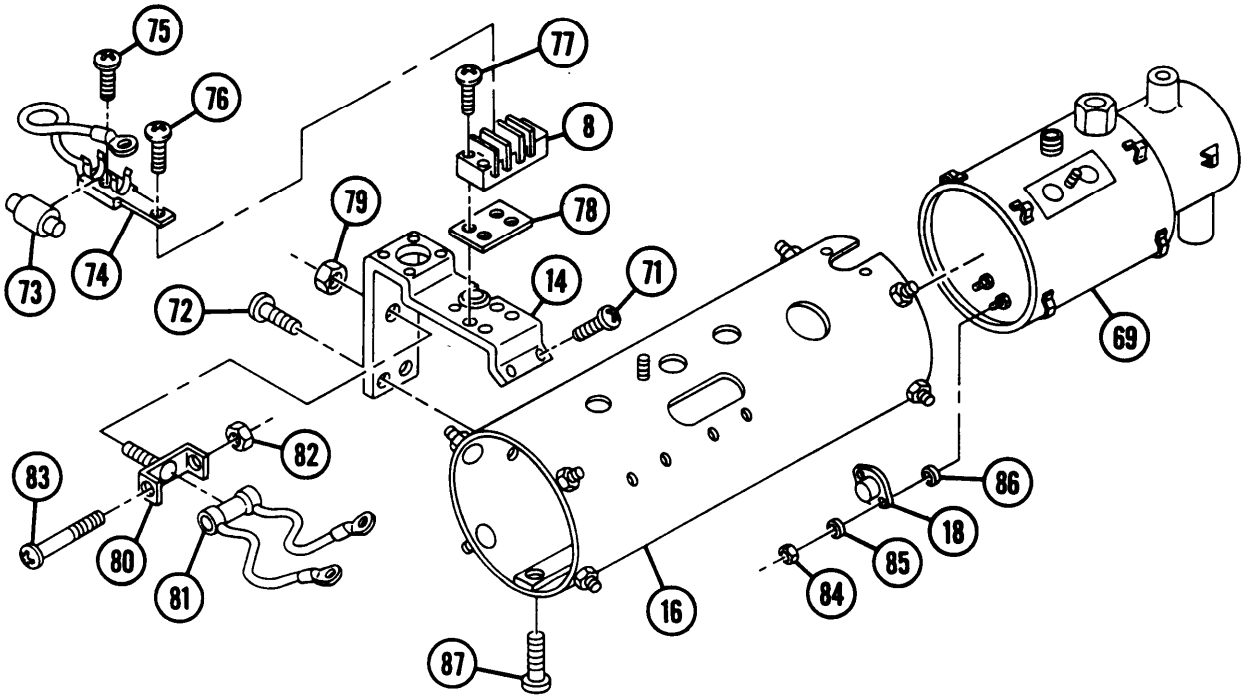
75
77
76
8
79
78
73
74
14
71
72
69
82
83
86
18
80
85
81
84
16
87

## 10-2 COOLANT HEATER — CONTINUED

**a. Disassembly — Continued**

**NOTE**

Perform step 45 only if nameplate requires replacement.

45 Remove four blind rivets (88) and nameplate (89). Discard blind rivets.

46 Install two grommets (90).

**b. Assembly**

1 Install two grommets (90).

2 Install nameplate (89) and four new blind rivets (88) (if removed).

3 Spread housing (16) open and install heat exchanger (69).

4 Install three screws (87).

5 Install two spacers (86), restriction thermostat (18), two flat washers (85), and two new assembled nuts (84).

6 Install resistor motor (81), screw (83), and nut (82).

7 Install bracket (80) with resistor motor (81) and nut (79) to bracket (14).

8 Install marker strip (78), terminal strip (8), and four screws (77).

9 Install diode holder (74) and two screws (75 and 76).

**NOTE**

Check direction of arrow on diode to ensure proper positioning.

10 Install diode (73) to diode holder (74).

11 Install bracket (14) and four screws (72).

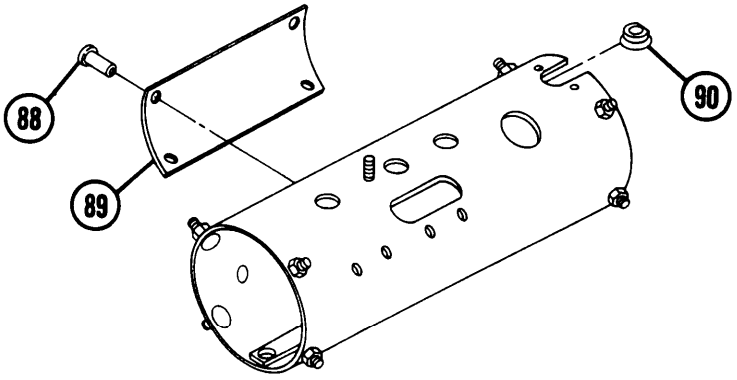

12 Install burner assembly (68), new preformed packing (70), and new gasket (71) to heat exchanger (69).

13 Install two clamps (66), two nuts (65), and two hook bolts (67) to secure burner assembly (68).

14 Install flange (58), preheat resistor (55), nut (36), new compression sleeve (64), and union (63) to fuel tube (40).

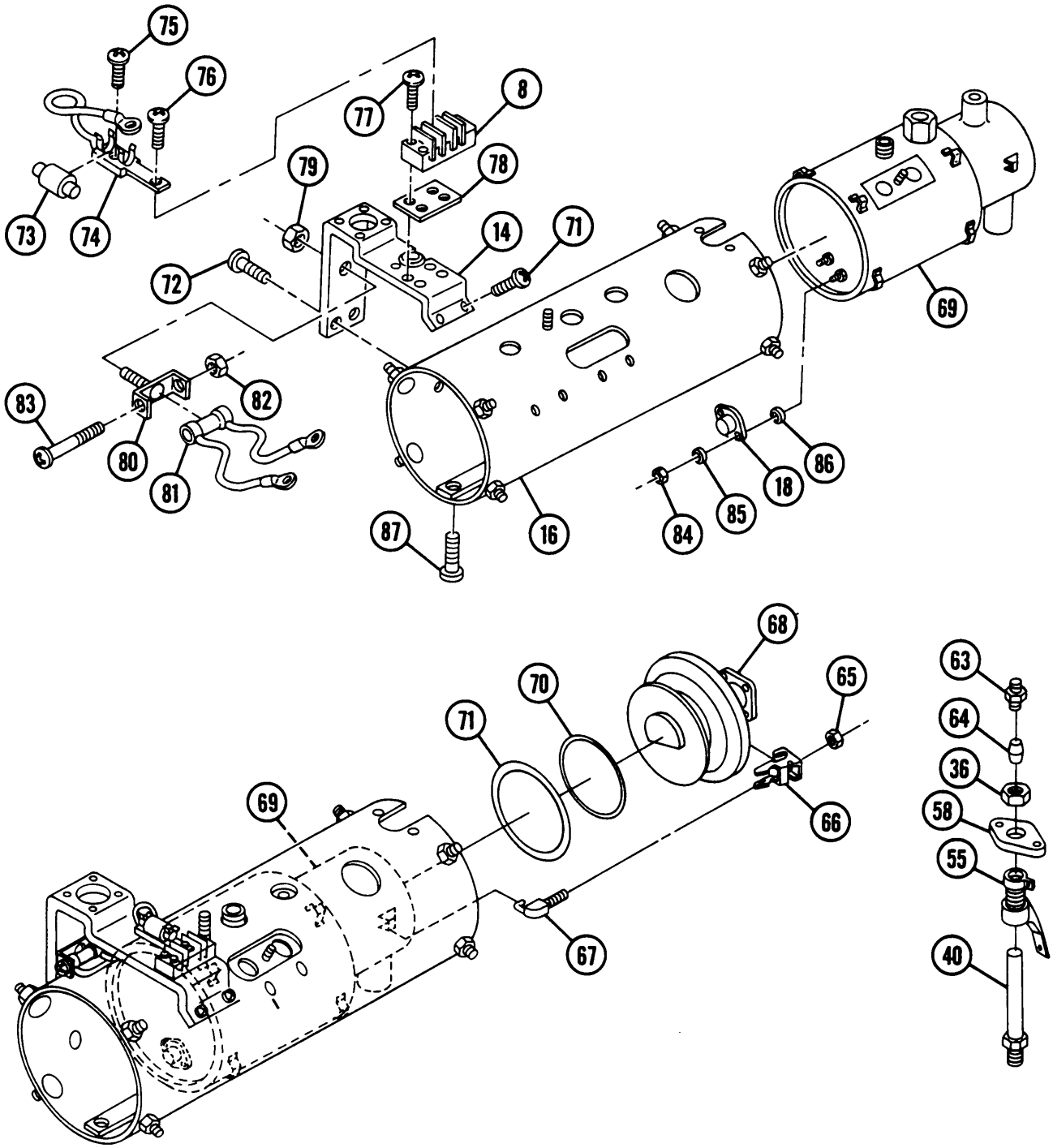

## 10-2 COOLANT HEATER — CONTINUED

**a. Assembly — Continued**

15 Install fuel tube (40) and resistor (55) as an assembly.

16 Install cable (62) to resistor (55) with two new assembled screws (60) and two nuts (61).

17 Install tapping plate (59).

18 Install two screws (57) to tapping plate (59).

19 Install igniter (53) and new gasket (56).

20 Install preheat resistor (55) to igniter (53) with two nuts (54).

21 Install lead (51) to igniter (53) with new assembled screw (50) and new lockwasher (52).

22 Install end plate (49) and four nuts (48).

23 Install new preformed packing (47), flat washer (46), connector (34), and overheat thermostat (20).

24 Install retainer (45), new lockwasher (44), and nut (43).

25 Install lead (42) to overheat thermostat (20).

26 Install bracket (39) and two screws (41).

27 Install fuel control valve (38) and two screws (37) to bracket (39) and fuel tube (40).

28 Tighten nut (36).

29 Install lead (35) to terminal strip (8).

30 Install two leads (32 and 33) to connector (34) on overheat thermostat (20).

31 Install nut (30) and new compression sleeve (31).

32 Install flame detector switch (23) and tighten nut (30).

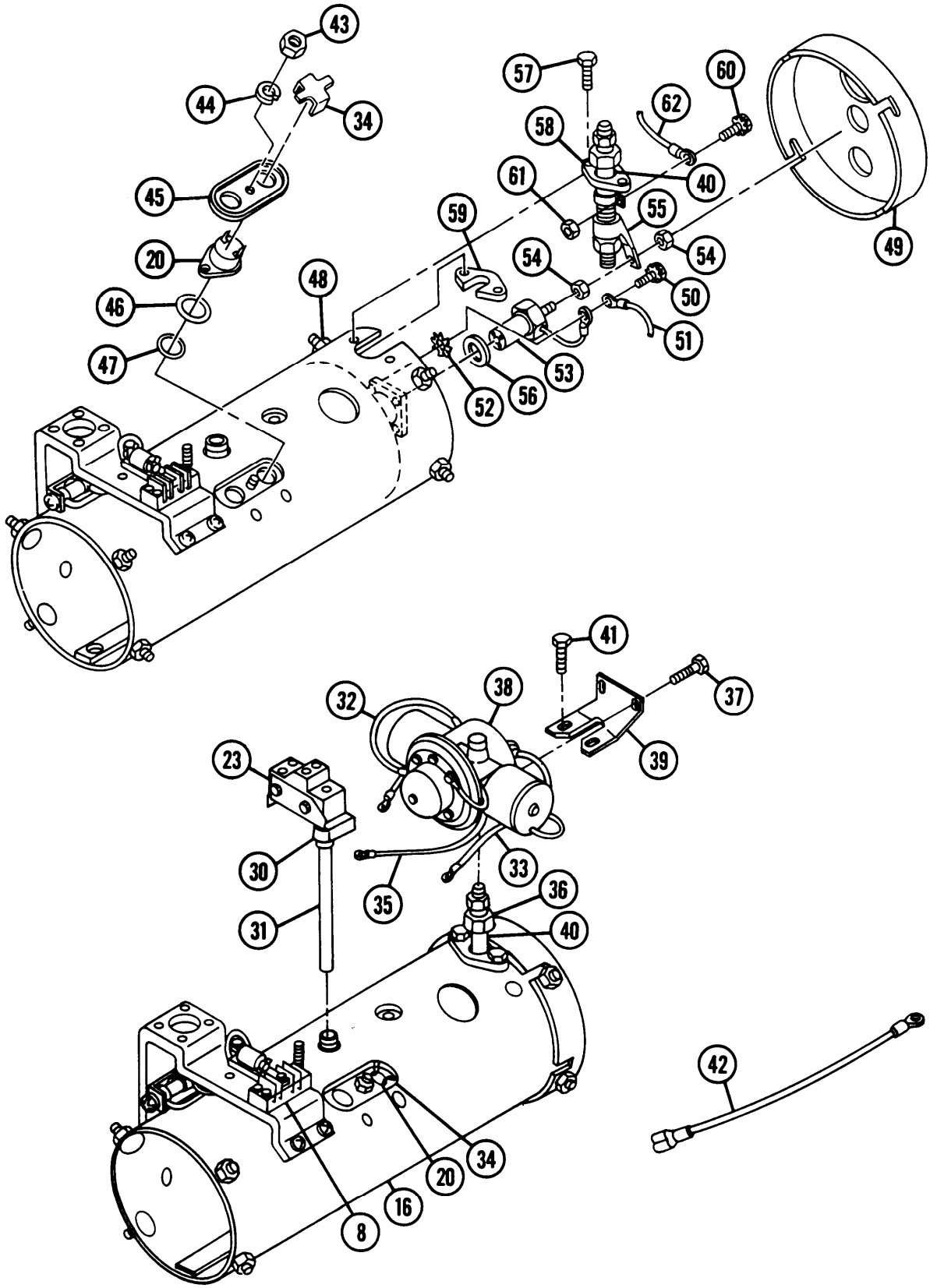
43
44
34
45
20
46
47
48
59
57
58
61
60
62
40
55
54
54
50
51
49
53
56
52
41
37
39
32
38
23
30
31
35
33
36
40
42
34
20
16
8

## 10-2 COOLANT HEATER — CONTINUED

**a. Assembly — Continued**

33 Install three leads (27, 28, and 29) and five screws (26).

34 Position receptacle (13) on engine coolant heater assembly (11) and install sleeve (25) over five receptacle leads (15, 17, 19, 21, and 22).

35 Connect leads (21 and 22) to flame detector switch (23).

36 Connect lead (19) to overheat thermostat (20).

37 Connect lead (17) to restriction thermostat (18).

38 Connect ground lead (15) to engine coolant heater assembly (11 ).

39 Install receptacle (13) and four new assembled screws (12) to bracket (14).

40 Install three new tiedown straps (24) to secure five receptacle leads (15, 17, 19, 21, and 22).

41 Position blower motor assembly (10) on engine coolant heater assembly (11 ) and turn clockwise until secured in slots of heater assembly.

42 Tighten four nuts (9).

43 Connect lead (7) to terminal strip (8).

44 Install tube (4), two elbows (5 and 6), and nut (3).

45 Install guard assembly (2) and four screws (1).

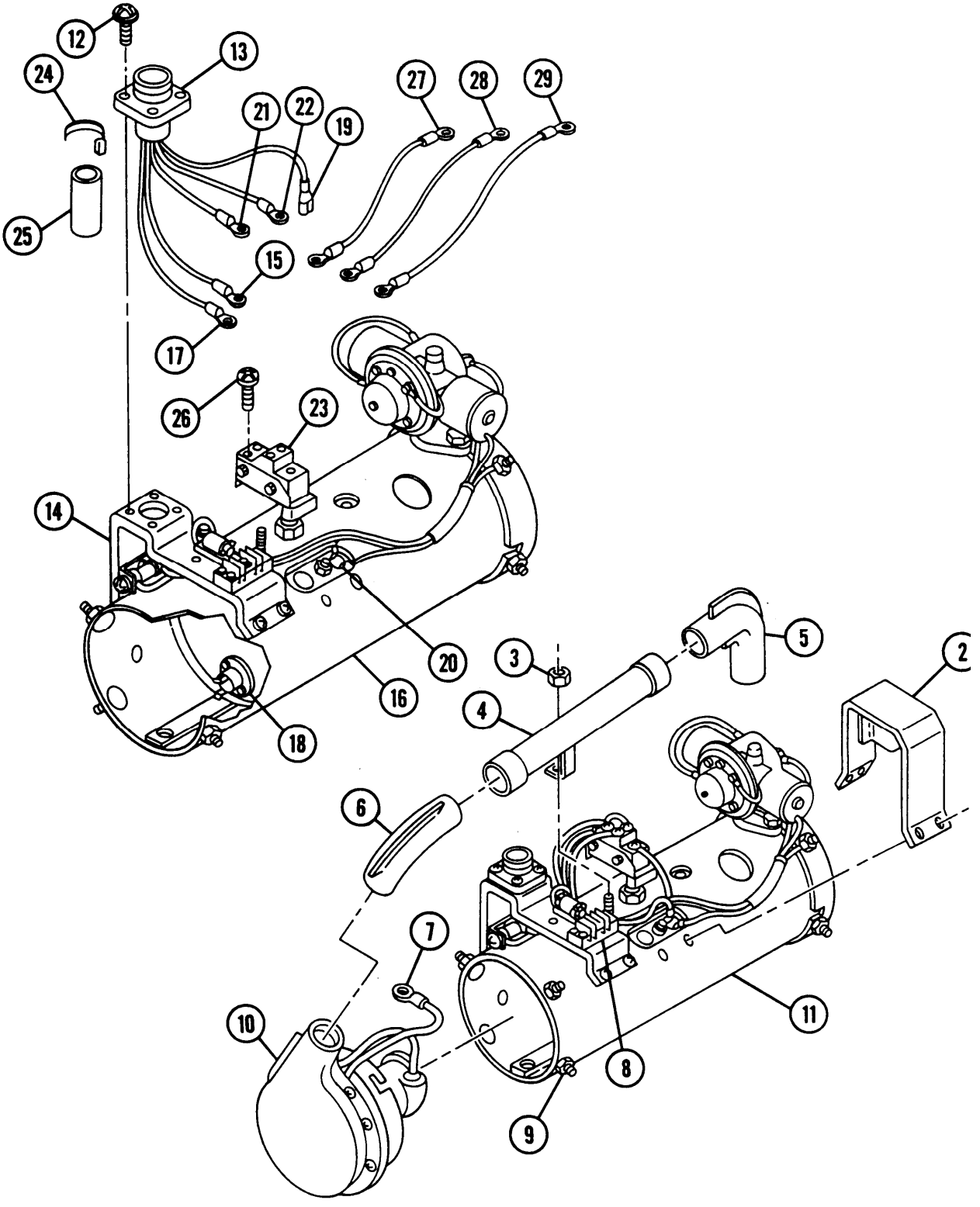


**NOTE**

FOLLOW-ON MAINTENANCE: Install engine coolant heater (TM 9-2350-311-20-1)

## 10-3 BLOWER MOTOR ASSEMBLY

This task covers: a. Removal b. Installation

**INITIAL SETUP**

**Tools**
General mechanic's tool kit (item 14, Appx C)

**a. Removal**

1 Loosen four nuts (1).

2 Turn blower motor assembly (2) counterclockwise to clear bayonet slots (3) and pull straight off coolant heater body (4).

**b. Installation**

1 Install blower motor assembly (2) straight onto coolant heater body (4). Turn assembly clockwise to secure position.

2 Tighten four nuts (1).

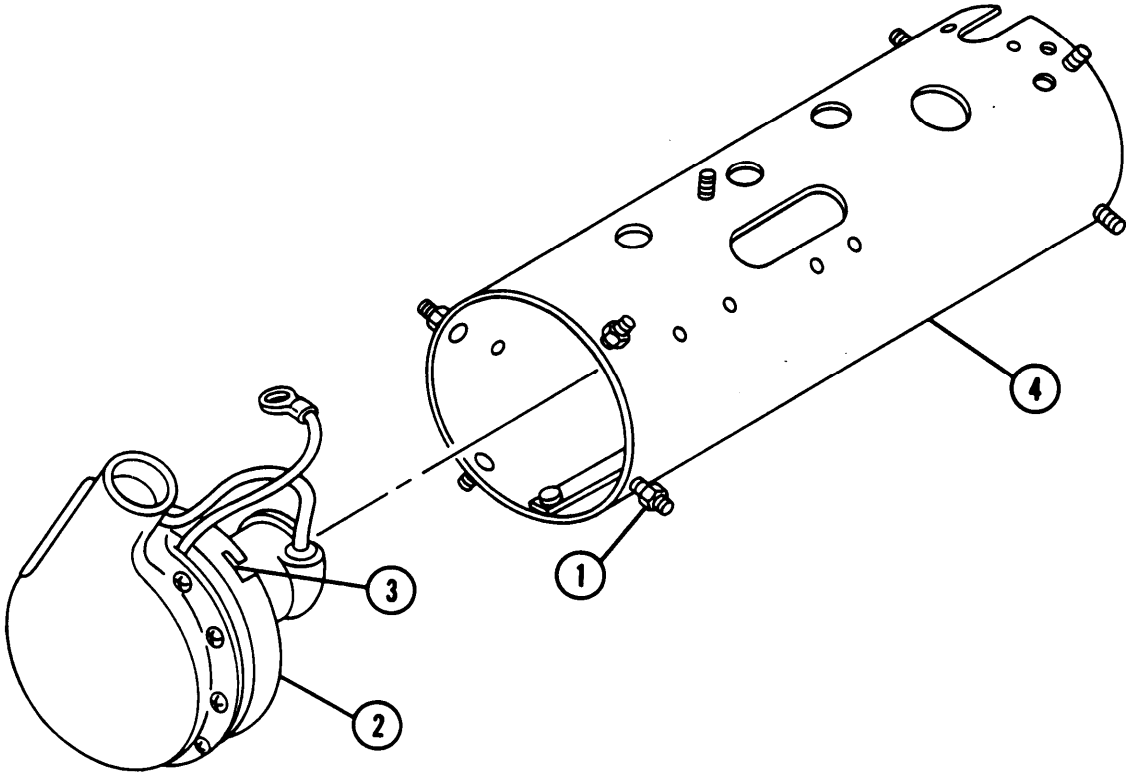

# APPENDIX A
# REFERENCES

## GENERAL

This appendix provides a list of regulations, pamphlets, forms, manuals, bulletins, and circulars referenced in this manual. Appropriate indexes should be consulted frequently for latest applicable changes, revisions, and additions.

CONTENTS


| | | PAGE |
|---|---|---|
| A-1 | ARMY REGULATIONS | A-2 |
| A-2 | DEPARTMENT OF THE ARMY PAMPHLETS. | A-2 |
| A-3 | DEPARTMENT OF THE ARMY FORMS. | A-2 |
| A-4 | FIELD MANUALS | A-2 |
| A-5 | STANDARD FORMS | A-2 |
| A-6 | TECHNICAL BULLETINS | A-2 |
| A-7 | TECHNICAL MANUALS | A-2 |
| A-8 | TRAINING CIRCULARS | A-4 |

## A-1 ARMY REGULATIONS

Accident Reporting and Records . . . . . .. AR 385-40
Malfunctions Involving Ammunition and Explosives . . . . . AR 75-1
Army Logistics Readiness and Sustainability. . . . . ..AR 700-138

## A-2 DEPARTMENT OF THE ARMY FORMS

Recommended Changes to Publications . . . . . ..DA FORM 2028
Recommended Changes to Equipment Technical Manuals . . . . . ..DA FORM 2028-2
Accident Report . . . . . ..DA FORM 285

## A-3 DEPARTMENT OF THE ARMY PAMPHLETS

The Army Maintenance Management System (TAMES) . . . . . ..DA PAM 738-750
Functional Users Manual for The Army Maintenance Management System —Aviation
(TAMMS-A) . . . . . .. DA PAM 738-751
Charging System Troubleshooting . . . . . .. DA PAM 750-33

## A-4 FIELD MANUALS

First Aid for Soldiers . . . . . ..FM 21-11

## A-5 STANDARD FORMS

Product Quality Deficiency Report. . . . . ..SF 368

## A-6 TECHNICAL BULLETINS

Solder and Soldering . . . . . ..TB SIG 222

## A-7 TECHNICAL MANUALS

Procedures for Destruction of Tank-Automotive Equipment to Prevent Enemy Use..... .TM 750-244-6
Cooling Systems: Tactical Vehicles . . . . . ..TM 750-254
inspection, Care, and Maintenance of Anti-Friction Bearings . . . . . ..TM 9-214

Operator's Manual: Howitzer, Self-Propelled: 155MM, M109A2 (2350-01 -031 -0686), M109A3 (2350-01 -031 -8851), M109A4 (2350-01-277-5770), and M109A5 (2350-01-281-1719) . . . . . TM 9-2350-311-10

Organizational Maintenance Manual for Hull, Powerplant, Drive Controls, Tracks, Suspension and Associated Components. Howitzer, Medium, Self-Propelled 155MM, M109A2 (2350-01-031-0586), M109A3 (2350-01 -031 -8851), M109A4 (2350-01-227-5770), and M109A5 (2350-01-281-171 9) . . . . . TM 9-2350-311 -20-1

Organizational Maintenance Manual for Cab, Armament, Sighting and Fire Control, Elevating and Traversing Systems and Associated Components Used on Howitzer, Medium, Self-Propelled: 155MM, M109A2 (2350-01-031-0586), M109A3 (2350-01-031-8851 ), M109A4 (2350-01 -277-5770), and MI09A5 (2350-01-281-1719) . . . . . TM 9-2350-311-20-2

Organizational, Direct Support and General Support Maintenance Repair Parts and Special Tools Lists: Howitzer, Medium, Self-Propelled: 155MM, M109A2 (2350-01-031-0586), Ml 09A3 (2350-01-031 -8851), Ml 09A4 (2350-01-277-5770), and Ml 09A5 (2350-01 -281-1719) . . . . . TM 9-2350-311-24P-1

Materials Used for Cleaning, Preserving, Abrading, and Cementing Ordnance Materiel; and Related Materials Including Chemicals . . . . . TM 9-247

Direct Support and General Support Maintenance Repair Parts and Special Tools List (Including Depot Maintenance Repair Parts and Special Tools) for Powertrain Assembly (8351 100) (Allison Model XTG 411-2A) Composed of: Transfer Assembly, Transmission Input (NSN 2520-00-9535); Transmission Assembly (NSN 2520-00-894-9533); Drive Assembly, Transmission Output, Vehicle Left (NSN 2520-00-894-9534) and Drive Assembly, Transmission Output, Vehicle Right (NSN 2520-00-894-9532) . . . . . ..TM 9-2520-234-34P

Field and Depot Maintenance Manual for Powertrain Assembly (8351100) (Allison Model XTG-411 -2A). Composed of: Transfer Assembly, Transmission Input (NSN 2520-00-9535); Transmission Assembly (NSN 2520-00-894-9533); Drive Assembly, Transmission Output, Vehicle Left (NSN 2520-00-894-9534) and Drive Assembly, Transmission Output, Vehicle Right (NSN 2520-00-894-9532) . . . . . TM 9-2520-234-35

General Maintenance Procedures for Fire Control Materiel . . . . . TM 9-254

Organizational, Direct Support, and General Support Maintenance Manual (Including Repair Parts and Special Tools Lists) for Combat Vehicle Personnel Heaters. Hupp MF 510A, Multi-Fuel, 6000 BTU, NSN 2540-00-930-8938. Hupp MF 510B, Multi-Fuel, 6000 BTU, NSN 2540-01-071-0652. Stewart Warner 10560C. Multi-Fuel, 6000 BTU, NSN 2540-01-083-0691. Stewart Warner 10560M, Multi-Fuel, 6000 BTU, NSN 2540-01-071-0651. Stewart Warner 8460-C24, Multi-Fuel, 2540-00-854-4449, ESPAR Products V7S, Diesel,40,000 BTU, NSN 2540-01-114-7688 . . . . . TM 9-2540-205-24&P

Unit Maintenance, Direct Support and General Support Maintenance Repair Parts and Special Tools List (Including Depot Maintenance Repair Parts and Special Tools List). 8V71 T Engines: Model 7083-7391 (2815-01-335-4579); Model 7083-7395 (281 5-01-260-0211 and 2815-01-043-7092); Model 7083-7396 (2815-01-040-3120 and 2815-01 -260-0212); Model 7083-7398 (281 5-00-936-7659); and Model 7083-7399 (2815-00-1 34-4845). . . . . TM 9-2815-202-24P

Direct Support and General Support Maintenance for Engine, Diesel with Container 7083-7391 (NSN 2815-01-3354579) Engine, Diesel with Container Model 7083-7395 (NSN 2815-01 -043-7092) (NSN 2815-01-260-0211) Engine, Diesel with Container Model 7083-7396 (NSN 2815-01-040-3120) (NSN 2815-01-260-0212) Engine, Diesel with Container Model 7083-7398 (NSN 2815-01-936-7695) Engine, Diesel with Container Model 7083-7399 (NSN 2815-00-134-4845). . . . . TM 9-2815-202-34

## A-7 TECHNICAL MANUALS — CONTINUED

Direct Support and General Support Maintenance Manual: Generator, Engine Accessory, AC, Prestolite Model AMA-510-2UT (FSN 2920-909-2483); Leece-Neville Models 3002AC and 3002AD (2920-475-1446), 2184AC (2920-782-1 955), and 5300GP (2920-818-8635), and Regulator, Generator Leece-Neville Model 3392R12P (2920-540-9476) . . . . . TM 9-2920-225-34

Direct Support Maintenance Manual Including Repair Parts and Special Tools List Alternator, 180 Amperes, Model 5520AB. . . . . TM 9-2920-258-30&P

Direct Support, General Support, and Depot Maintenance (Including Repair Parts) for Starter, Engine, Electric, Assembly (NSN 2920-00-226-6545) (Delco-Remy Model 1113943) (Military PN 10911018-1); (NSN 2920-00-911-5937) (Delco-Remy Model 11 13904) (Military PN 10911018); (NSN 2920-00-912-9510) (Delco-Remy Model 1113944) . . . . . TM 9-2920-242-35

Direct Support and General Support Maintenance Manual (Including RPSTL) for Starter, Engine, Electric Assembly (Leece-Neville M0017072MB) (NSN 2920-00-267-9987) . . . . . TM 9-2920-243-34

Direct Support, General Support, and Depot Maintenance (Including Repair Parts) for Starter, Engine, Electrical Assembly (NSN 2920-00-999-8216) (Prestolite Model MFY6101IUT) . . . . . TM9-2920-243-35

Operator and Organizational Maintenance Manual Including Repair Parts and Special Tools Lists and Simplified Test Equipment for Internal Combustion Engines (STE/ICE) . . . . . TM 9-4910-571-12&P

Operator's, Organizational, Direct Support and General Support Maintenance Manual for Lead-Acid Storage Batteries. . . . . TM9-6140-200-14

## A-8 TRAINING CIRCULARS

Operator's Manual, Welding Theory, Etc . . . . . TC 9-237

# APPENDIX B
# EXPENDABLE AND DURABLE ITEMS LIST

**General**

This appendix lists expendable supplies and materials you will need to maintain the M109A2/M109A3/M109A4/M109A5 Howitzer.

CONTENTS PAGE


| | | |
|---|---|---|
| Section I | INTRODUCTION | B-2 |
| B-1 | SCOPE | B-2 |
| B-2 | EXPLANATION OF COLUMNS | B-2 |
| Section II | EXPENDABLE AND DURABLE ITEMS LIST | B-3 |

# SECTION I. INTRODUCTION

## B-1 SCOPE

This appendix lists expendable and durable items needed to maintain the M109A2/M109A3/M109A4/M109A5 Howitzers. These items are authorized to you by CTA 50-970, Expendable Items (Except Medical, Class V, Repair Parts, and Heraldic Items).

## B-2 EXPLANATION OF COLUMNS

**a. Column (1) —** ITEM NO.

This number is assigned to the entry in the list and is referenced to identify the material, e.g., “Acetone (item 1, Appx B).”

**b. Column (2) — LEVEL**

This column identifies the lowest level of maintenance that requires the listed items:

C — Operator/crew
O — Unit maintenance
F — Direct support maintenance
H — General support maintenance

**c. Column (3) — NATIONAL STOCK NUMBER**

This is the national stock number assigned to the item; use it to requisition the item.

**d. Column (4) — DESCRIPTION**

Indicates the Federal item name and, if required, a description to identify the item. The last line for each item provides the Commercial and Government Entity Code (CAGEC) in parentheses followed by the PN.

**e. Column (5) — UNIT OF MEASURE (U/M)**

Indicates the measure used in performing the actual maintenance function. This measure is expressed by a two-character alphabetical abbreviation (e.g., EA, IN, PR). If the unit of measure differs from the unit of issue, as shown in the Army Master Data File (AMDF), requisition the lowest unit of issue that will satisfy your requirements.

| Abbreviation | Unit | Abbreviation | Unit | Abbreviation | Unit |
|---|---|---|---|---|---|
| BT | bottle | KT | kit | RO | roll |
| CN | can | OZ | ounce | SH | sheet |
| EA | each | PG | package | TU | tube |
| GL | gallon | PT | pint | | |

## SECTION II. EXPENDABLE AND DURABLE ITEMS LIST

| (1) ITEM NO. | (2) LEVEL | (3) NATIONAL STOCK NUMBER | (4) DESCRIPTION | (5) U/M |
|---|---|---|---|---|
| 1 | | 6810-00-184-4796 | Acetone, technical, 5 gal (19 L) can: (81348) O-A-51 | CN |
| 2 | | 8040-00-664-4318 | Adhesive, rubber based, general purpose, type II,1 pt (0.47 L) can: (81348) MMM-A-1617 | PT |
| 3 | | 8040-00-701-9546 | Adhesive, 1 oz (30 mL) primer-bottle, 4.7 oz (139 mL) adhesive-tube: (81349) MIL-A46106 | KT |
| 4 | | 8105-00-2998532 | Bag, plastic, 100 each box: (81348) PP-B-26 | EA |
| 5 | | 8115-00-190-5020 | Box, shipping, 10 each bundle: (81348) PPP-B-636 | EA |
| 6 | | 8010-01-313-8700 | Coating, epoxy, VOC compliant, white, (CARC), 1 qt (0.9 L) each component (81349) MIL-C-22750 | KT |
| 7 | | 6850-00-281-3061 | Dry-cleaning solvent, 4 oz (118 mL) can: (81348) P-D-680 | CN |
| 8 | | | Gloves, patient, exam; package of 100 (89875): | |
| | | 6515-01-150-2977 | size large, E —011 | PG |
| | | 6515-01-150-2978 | size medium, E —012 | PG |
| | | 6515-01-150-2976 | size small, E —010 | PG |
| 9 | | 9150-00-935-1017 | Grease, automotive artillery, 14 oz (414 mL) cartridge: (81349) MIL-G-10924 | OZ |
| 10 | | 6850-00-003-1194 | Lubricant, cleaning: (81349) MIL-C-83360 | CN |
| 11 | | 6810-00-223-9069 | Naphtha, aromatic,1 gal (3.8 L) can: (81348) IT-N-97C | GL |
| 12 | | 5350-00-598-5537 | Paper, abrasive, type i, size fine: (80244) A-A-1202 | SH |
| 13 | | 8010-00-551-0128 | Pigment, iron-blue, 2 oz (59 mL) tube: (81348) TT-P-381 | TU |

| (1) ITEM NO. | (2) LEVEL | (3) NATIONAL STOCK NUMBER | (4) DESCRIPTION | (5) U/M |
|---|---|---|---|---|
| 14 | | 8010-01-309-0328 | Primer, epoxy coating (CARC), component A, 1 gal (3.8 L); component B, 1 qt (0.9 L) kit: (81349) MIL-P-53022 | KT |
| 15 | | 8010-01-193-0520 | Primer, epoxy coating (CARC), component A; 1 gal (3.8 L); component B, 1 qt (0.9 L): (81349) MIL-P-53030 | KT |
| 16 | | 2901-00-078-4065 | Repair kit, plastic, fuel tank: (19207) 10941900 | EA |
| 17 | | 2901-00-078-4065 | Repair kit, plastic, fuel tank, (for holes larger than one in.): (19207) 10941900 | EA |
| 18 | | 8040-01-108-6660 | Repair kit, plastic, fuel tank (for holes smaller than one in.): (19207) 900M-195 | EA |
| 19 | | 8050-00-551-1059 | Sealing compound, 3 oz (89 mL) can: (81349) MIL-S-45180 | OZ |
| 20 | | 8030-00-935-7100 | Sealing compound, locking and retaining, single component, 50 cu cm (3.1 cu in.) bottle: (81349) MIL-S-22473 | BT |
| 21 | | 6850-01-137-8525 | Silicone compound, heat sink, 2 oz (59 mL) jar: (81348) MIL-C-47113 | OZ |
| 22 | | 6850-01-304-6632 | Silicone compound, 8 oz (237 mL) tube: (96906) MIL-S-8660 | OZ |
| 23 | | 3439-01-150-1051 | Solder, rosin core, 1 lb (0.5 kg) roll: (17794) 1243-0001 | RO |
| 24 | | 3439-00-220-3827 | Solder flux, 1 pt (0.47 L) bottle: MIL-F-14256 | BT |
| 25 | | 5970-00-816-6056 | Tape insulation, electrical, pressure-sensitive adhesive, black, 108 ft (33 m) roll: (81348) HH-I-111 | RO |
| 26 | | 7510-01-146-7767 | Tape, pressure-sensitive, 60 yd (54.9 m) roll: (81348) PPP-T-60 | RO |
| 27 | | 2520-01-373-2760 | Transmission trunnion cap replacement kit: (19207) 57K0984 | KT |

# APPENDIX C
# TOOL IDENTIFICATION LIST

## GENERAL

This appendix lists tools and equipment you will need to maintain the M109A2/M109A3/M109A4/M109A5 Howitzer.

CONTENTS


| | | PAGE |
|---|---|---|
| C-1 | EXPLANATION OF COLUMNS | C-2 |
| C-2 | TOOL IDENTIFICATION LIST | C-3 |

## C-1 EXPLANATION OF COLUMNS

**a. Column (1) — ITEM NO.**

This number is assigned to the entry in the listing and is referenced in the initial setup of procedures to identify the tool.

**b. Column (2) — NOMENCLATURE**

Indicates the Federal item name.

c. **Column (3) — NATIONAL STOCK NUMBER**

Indicates the national stock number assigned to the tool.

d. Column (4) — PN

Indicates the manufacturer's PN for the tool.

e. **Column (5) — REFERENCE**

Indicates the reference source where more detailed item information is located.

## C-2 TOOL IDENTIFICATION LIST

| (1) ITEM NO. | (2) NOMENCLATURE | (3) NATIONAL STOCK NUMBER | (4) PN | (5) REFERENCE |
|---|---|---|---|---|
| 1 | Adapter | 4730-00-266-0541 | MS39158-7 | TM 9-2350-311-24P |
| 2 | Calipers, vernier | 5210-00-234-8017 | GGG-C-111 | GSA Supply Catalog |
| 3 | Blocks, support | 5510-00-274-5381 | MM-L-736 | |
| 4 | Dial indicator | 5210-00-277-840 | 196A | SC 3470-95-A02 |
| 5 | Drill | 5130-00-889-9004 | WD0061 | SC 4910-95-CL-A74 |
| 6 | Drill bit | 5133-00-189-9324 | 10034 | GSA Supply Catalog |
| 7 | Drill set, twist | 5133-00-293-0983 | GGG-D-751 | SC 4910-95-CL-A74 |
| 8 | Extension, fuel hose | 4720-00-080-8586 | 8708306 | TM 9-2350-311-24P-1 |
| 9 | File, fine-mill | 5110-00-203-4645 | TEAX1FK | SC 4910-95-CL-A72 |
| 10 | Growler | 6625-00-828-5810 | TS965U | SC 4940-95-CL-B20 |
| 11 | Gun, soldering | 3439-00-618-6623 | D550-3 | SC 4910-95-CL-A72 |
| 12 | Hammer, 1 lb | 5120-00-061-8543 | GGG-H-86 | SC 5180-90-N26 |
| 13 | Hammer, 3 lb | 5120-00-900-6103 | A-A-1292 | SC 5180-90-N26 |
| 14 | General mechanic's tool kit | | | SC 5180-90-N26 |
| 15 | Micrometer, depth | 5210-00-542-4602 | 1JA1651H05 | GSA Supply Catalog |
| 16 | Multimeter | 6625-01-139-2512 | T00377 | SC 4910-95-CL-A72 |
| 17 | Lathe, engine | 3416-01-030-8195 | 1334-MIL | SC 3416-01-030-8195 |
| 18 | Riveter, hand-held | 5120-00-017-2849 | 200 | SC 4910-95-CL-A74 |
| 19 | Socket | 5120-01-255-8232 | 12268253 | TM 9-2350-311-24P |
| 20 | Socket wrench set | 5120-00-322-6231 | | GSA Supply Catalog |
| 21 | Sling, multiple leg lifting | 3940-01-977-7389 | 10930560 | TM 9-2350-311-24P |
| 22 | Sling, lifting | 3940-00-675-5003 | PD101-96 | TM 9-2350-311-24P |
| 23 | Stone, sharpening | 5345-00-198-8050 | SS-S-736 | GSA Supply Catalog |
| 24 | Welding shop kit, trailer-mounted | 3431-01-090-1231 | S04M2 | SC 3431-95-A04 |
| 25 | Wrench, prong | 5120-00-034-0867 | 109141193 | TM 9-2350-311-24P-1 |
| 26 | Wrench, torque | 5120-00-221-7983 | SW130-301 | SC 4910-95-CL-A72 |
| 27 | Wrench, torque | 5120-00-853-4538 | F200I | SC 4910-95-CL-A72 |
| 28 | Wrench, torque | 5120-00-640-6364 | 1753LDF | SC 4910-95-CL-A72 |

# APPENDIX D
# ILLUSTRATED LIST OF MANUFACTURED ITEMS

## GENERAL

This appendix includes complete instructions for making items authorized to be manufactured or fabricated at direct support and general support maintenance levels. All bulk materials needed for manufacture of an item are listed on the illustration. An index in alphanum eric order is provided for cross-referencing the item to be manufactured to the figure that covers fabrication criteria.


| ITEM NO. | NOMENCLATURE | FIGURE NO. |
|---|---|---|
| 1 | FAN DRIVE FABRICATED BRACKET | 1 |
| 2 | FINAL DRIVE FABRICATED STAND | 2 |
| 3 | FABRICATED PAD | 3 |
| 4 | FABRICATED REMOVAL/INSTALLATION TOOL | 4 |
| 5 | VANEAXIAL FAN GEAR BOX FABRICATED MEASURING BAR | 5 |

## ITEM 1 FAN DRIVE FABRICATED BRACKET

Material
0.75- by 0.080-in. (19.1-by 2.03-mm) steel

Fabricate bracket from steel according to specifications below.

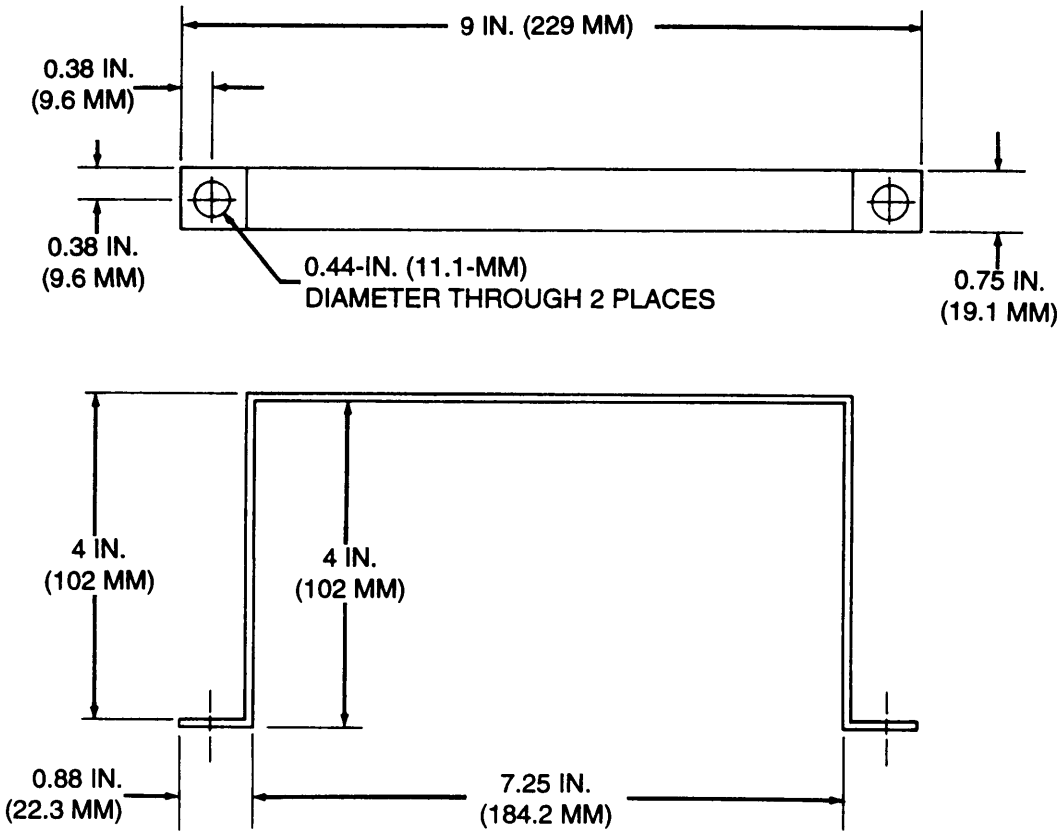


Figure 1

## ITEM 2 FINAL DRIVE FABRICATED STAND

**Material**
Old sprocket hub (NSN 2520-00-066-0239; PN 19207)
0.125- by 2.5-in. (3.2-by 64-mm) flat steel

1 Fabricate rack from steel to support weight of final drive.

2 Ensure final drive fits comfortably in rack. Bolt rack to upper ring or weld rack to hub (TM 9-237).

3 Before using stand, bolt stand securely to floor through lower ring.

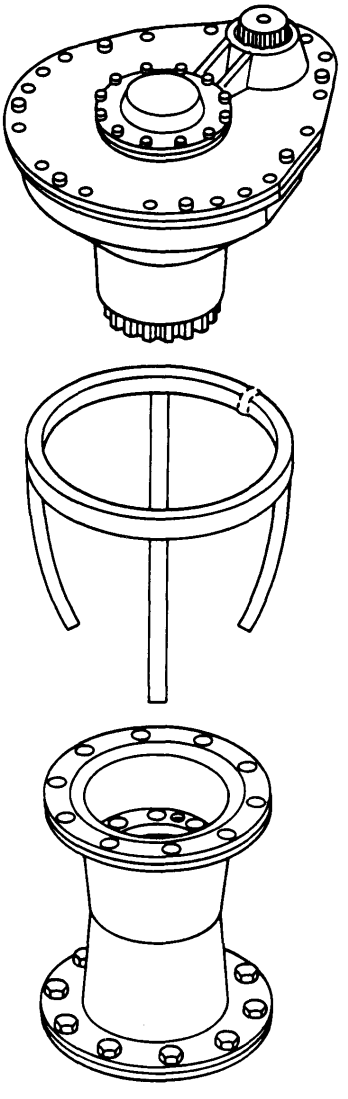

Figure 2

## ITEM 3 FABRICATED PAD

**Material**
0.5-in. (13-mm) thick thermal glass fiber felt insulation (type II; MIL-I-16411)
Glass cloth (type I; class 9; MIL-C-20079)
Fibrous glass cord (type SR-4-5; MIL-I-3158)

1 Fabricate pad according to specifications below.

2 Stitch with fibrous glass cord as required to maintain shape.

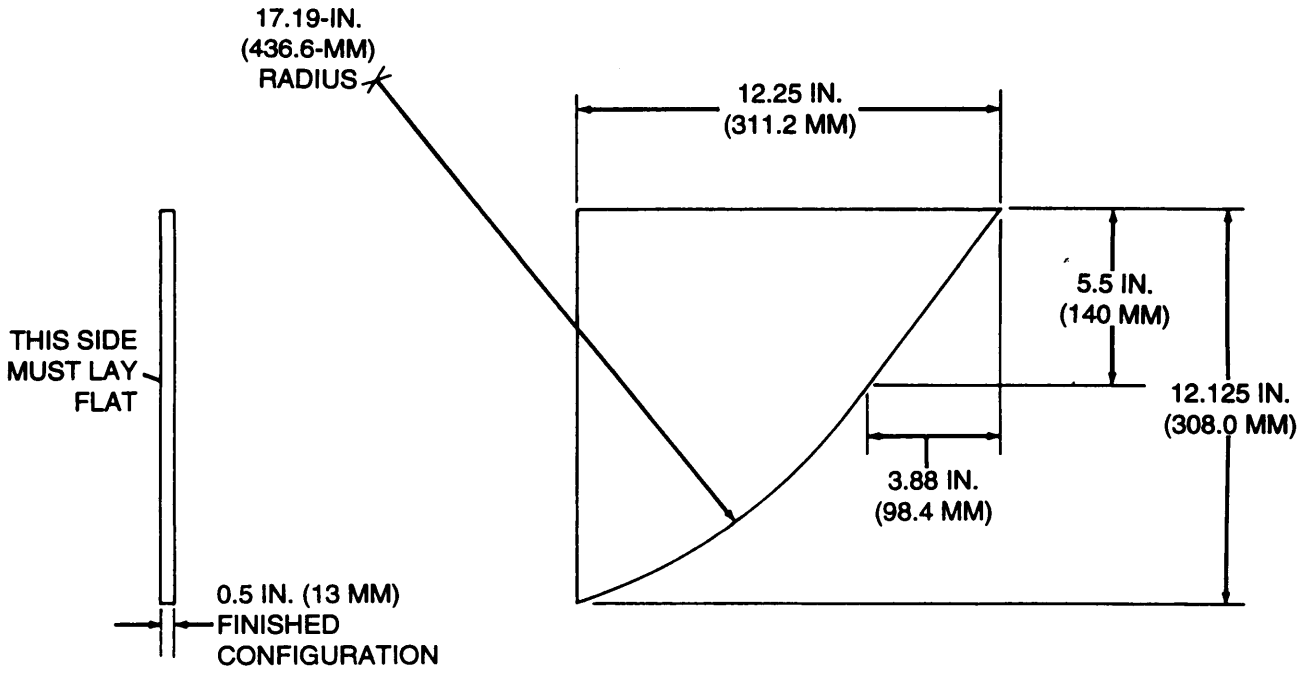


Figure 3

## ITEM 4 FABRICATED REMOVAL/INSTALLATION TOOL

**Material**
0.125- by 0.69-in. (3.2-by 17.5-mm) steel

Fabricate removal/installation tool from steel according to specifications below.

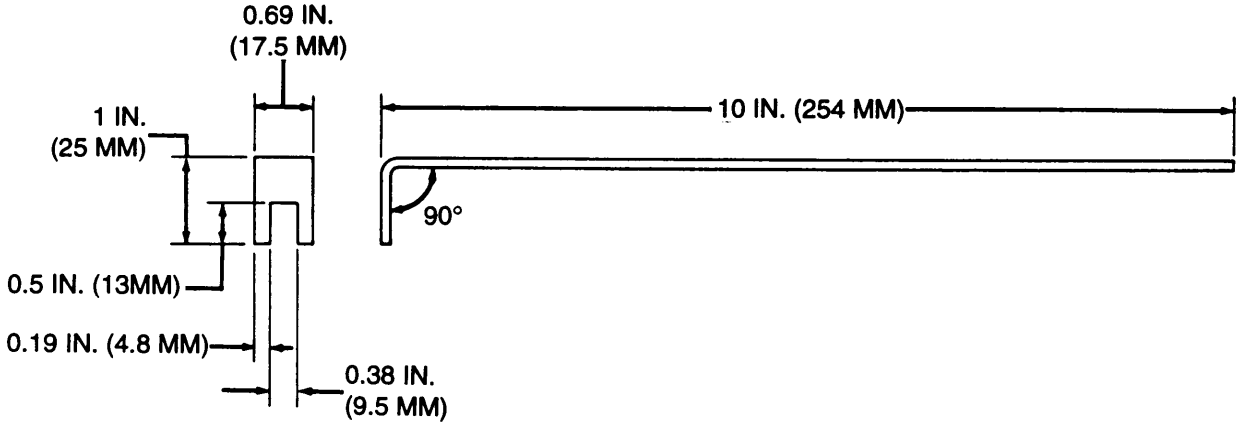


Figure 4

## ITEM 5 VANEAXIAL FAN GEAR BOX FABRICATED MEASURING BAR

**Material**
0.125- by 0.75-in. (3.2-by 19.1-mm) steel

Fabricate measuring bar from steel according to specifications below.

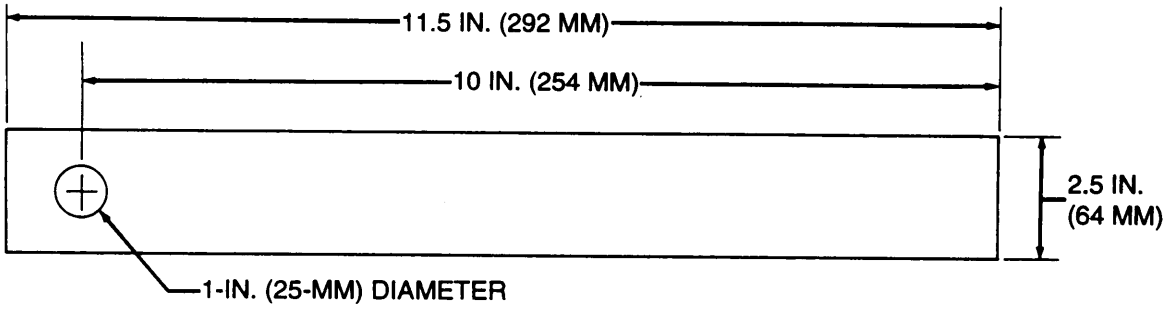


Figure 5

# APPENDIX E
# TORQUE LIMITS

## GENERAL

This appendix provides general wet torque limits for screws used on the M109A2/M109A3/M109A4/M109A5 Howitzer. Specific torque limits are indicated in the maintenance procedures for applicable components. The general torque limits given in this appendix shall be used when specific torque limits are not provided in the maintenance procedure.

These general torque limits cannot be applied to screws that retain rubber components; the rubber components will be damaged before the correct torque limit is reached. If a specific torque limit is not provided for screws that contain rubber components in the maintenance procedure, tighten the screw or nut until it touches the metal bracket, then tighten it 1 more turn.

This appendix also provides information on tightening metal fasteners, fastener size and thread pattern, and fastener grade.

CONTENTS


| | | PAGE |
|---|---|---|
| E-1 | TORQUE LIMITS | E-2 |
| E-2 | HOW TO USE TORQUE TABLE | E-2 |
| E-3 | TIGHTENING METAL FASTENERS | E-4 |
| E-4 | FASTENER SIZE AND THREAD PATTERN | E-4 |
| E-5 | FASTENER GRADE | E-5 |

## E-1 TORQUE LIMITS

Table E-1 lists wet torque limits. Wet torque limits are used on screws with high-pressure lubricants applied to threads.

## E-2 HOW TO USE TORQUE TABLE

1 Measure diameter of screw you are installing.

2 Count number of threads per in. or use a pitch gage.

3 Under heading “SIZE", look down "DIA IN.” column until you find diameter of screw being installed (there will usually be two lines beginning with same size).

4 Use “THREADS PER IN.” column under “SIZE” heading to find number of threads per in. that matches number of threads counted in step 2.

5 To find grade of screw you are installing, “SAE CAP SCREW HEAD MARKING” row to match markings on head to correct picture on torque table.

6 Look down column under picture found in step 5 until you find torque limit in Ib-ft or N•m for diameter and threads per in. of screw you are installing.

**NOTE**

Manufacturer’s cap screw head marking may vary. These are all Society of Automotive Engineers (SAE) grade 5 (3 line).

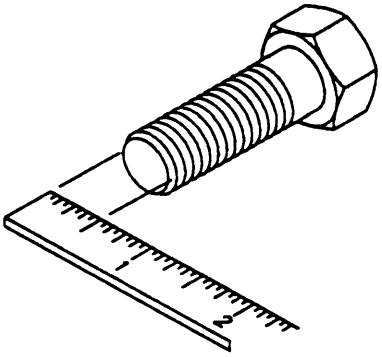

MEASURING DIAMETER

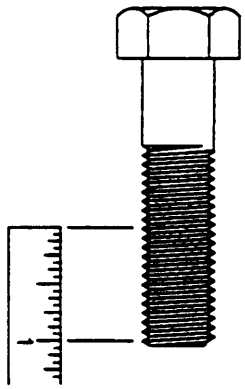

COUNTING THREADS/IN.

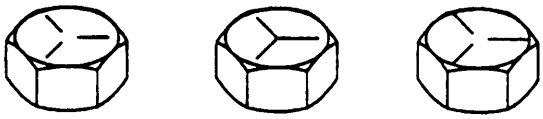

SAE GRADE 5 (3 LINE) MARKINGS

TABLE E-1 TORQUE LIMITS FOR WET FASTENERS

| SIZE | | | TORQUE | | | | | | | |
|---|---|---|---|---|---|---|---|---|---|---|
| SAE CAP SCREW HEAD MARKINGS | | | SAE GRADE NO. 1 OR 2 | | SAE GRADE NO. 5 | | SAE GRADE NO. 6 OR 7 | | SAE GRADE NO. 8 | |
| | | | 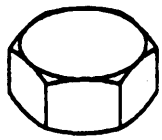 | | 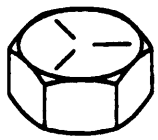 | | 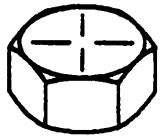 | | 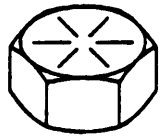 | |
| DIA IN. | THREADS PER IN. | DIA MM | LB-FT | N•M | LB-FT | N•M | LB-FT | N•M | LB-FT | N•M |
| 1/4 | 20 | 6.35 | 5 | 7 | 7 | 10 | 9 | 12 | 11 | 15 |
| 1/4 | 28 | 6.35 | 5 | 7 | 9 | 12 | — | — | 13 | 17 |
| 5/16 | 18 | 7.94 | 10 | 13 | 15 | 21 | 17 | 23 | 22 | 29 |
| 5/16 | 24 | 7.94 | 12 | 16 | 17 | 23 | — | — | 24 | 33 |
| 3/8 | 16 | 9.53 | 16 | 22 | 28 | 38 | 31 | 42 | 40 | 54 |
| 3/8 | 24 | 9.53 | 18 | 24 | 32 | 43 | — | — | 44 | 60 |
| 7/16 | 14 | 11.11 | 25 | 34 | 44 | 60 | 50 | 67 | 63 | 85 |
| 7/16 | 20 | — | 27 | 37 | 50 | 67 | — | — | 70 | 95 |
| 1/2 | 13 | 12.70 | 35 | 48 | 68 | 92 | 77 | 104 | 95 | 128 |
| 1/2 | 20 | — | 37 | 50 | 77 | 104 | — | — | 108 | 146 |
| 9/16 | 12 | 14.29 | 46 | 62 | 99 | 134 | 108 | 146 | 140 | 189 |
| 9/16 | 18 | — | 50 | 67 | 108 | 146 | — | — | 153 | 207 |
| 5/8 | 11 | 15.88 | 57 | 77 | 135 | 183 | 150 | 204 | 189 | 256 |
| 5/8 | 18 | — | 86 | 117 | 153 | 207 | — | — | 216 | 293 |
| 3/4 | 10 | 19.05 | 95 | 128 | 243 | 330 | 252 | 342 | 338 | 458 |
| 3/4 | 16 | — | 104 | 140 | 266 | 360 | — | — | 378 | 513 |
| 7/8 | 9 | 22.23 | 144 | 195 | 356 | 482 | 396 | 537 | 545 | 738 |
| 7/8 | 14 | — | 158 | 214 | 392 | 531 | — | — | 608 | 824 |
| 1 | 8 | 25.40 | 212 | 287 | 531 | 720 | 594 | 805 | 819 | 1110 |
| 1 | 14 | — | 225 | 305 | 594 | 805 | — | — | 891 | 1208 |
| 1-1/8 | — | 25.58 | — | — | 720 | 976 | — | — | 1152 | 1562 |
| | | | | | 792 | 1074 | | | 1296 | 1757 |
| 1-1/4 | — | 31.75 | — | — | — | — | — | — | 1638 | 2221 |
| | | | | | | | | | 1800 | 2440 |
| 1-3/8 | — | 34.93 | — | — | 1314 | 1782 | — | — | 2142 | 2904 |
| | | | | | 1512 | 2050 | | | 2448 | 3319 |
| 1-1/2 | — | 38.10 | — | — | 1746 | 2367 | — | — | 2844 | 3856 |
| | | | | | 1980 | 2684 | | | 3204 | 4344 |

## E-3 TIGHTENING METAL FASTENERS

When torquing fastener, select torque wrench with range (Table E-2) that fits required torque value. A torque wrench is most accurate from 25% to 75% of its stated range. A torque wrench with stated range of 0-100 Ib-ft (0-136 N•m) will be most accurate from 25-75 Ib-ft (34-102 N•m). Accuracy of readings will decrease as you approach 0 Ib-ft (0 N•m) or 100 Ib-ft (136 N•m). The following ranges (Table E-2) are based on this principle:

TABLE E-2 TORQUE RANGES

| STATED RANGE | MOST EFFECTIVE RANGE |
|---|---|
| 0-200 Ib-ft (0-271 N•m) | 4-13 Ib-ft (5-18 N•m) |
| 0-600 Ib-ft (0-813 N•m) | 50-50 Ib-ft (68-610 N•m) |
| 0-170 Ib-ft (0-230 N•n) | 44-131 Ib-ft (60-178 N•m) |
| 15-75 Ib-ft (20-102 N•m) | 30-60 Ib-ft (41-81 N•m) |

## E-4 FASTENER SIZE AND THREAD PATTERN

Threaded fasteners are categorized according to diameter of fastener shank. Thread styles are divided into broad groups; two most common ranges being coarse (Unified Coarse-UNC) and fine (Unified Fine-UNF). These groups are defined by the number of threads per in. on the bolt shanks. In addition, threads are categorized by thread class (Table E-3), which is a measure of the degree of fit between the threads of the bolt or screw (external threads) and the threads of the attaching nut or tapped hole (internal threads). The most common thread class for bolts and screws is class 2.

TABLE E-3 THREAD CLASSES AND DESCRIPTION

| EXTERNAL | INTERNAL | FIT |
|---|---|---|
| 1A | 1B | Loose fit |
| 2A | 2B | Medium fit |
| 3A | 3B | Close fit |

Thread patterns are designed as follows:

**NOTE**

Unless followed with -LH (e.g., 3/4-1 OUNC-2A-LH), threads are right-hand.

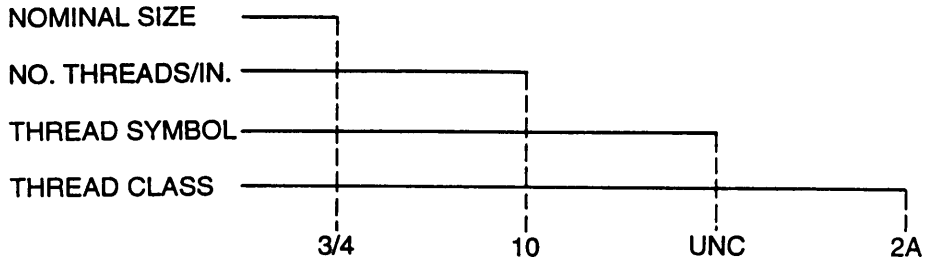

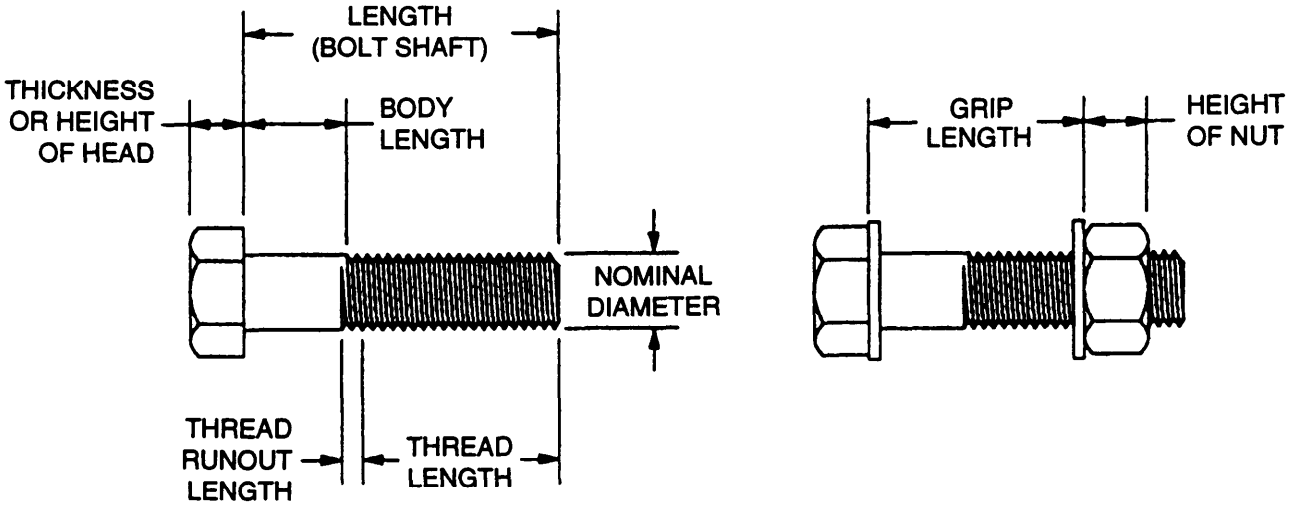


## E-5 FASTENER GRADE

In addition to thread type classification, threaded fasteners are also classified by material. The most familiar fastener classification system is the SAE grading system (Table E-4).

TABLE E-4 SAE SCREW AND BOLT MARKINGS

| SCREWS | BOLTS |
|---|---|
| SAE grade 2<br>No marking | SAE grade 6<br>Four radial dashes<br>90° apart |
| SAE grade 3<br>Two radial dashes<br>180° apart | SAE grade 7<br>Five radial dashes<br>72° apart |
| SAE grade 5<br>Three radial dashes<br>120° apart | SAE grade 8<br>Six radial dashes<br>60° apart |

**Markings on Hex Locknuts**

Grade A — no marks
Grade B — three marks
Grade C — six marks

Grade A — no notches
Grade B — one notch
Grade C — two notches

Grade A — no mark
Grade B — letter B
Grade C — letter C

# APPENDIX F
# MANDATORY REPLACEMENT PARTS

## GENERAL

This appendix provides a cross-reference list of mandatory replacement parts and is included for that purpose only.

CONTENTS PAGE

F-1 EXPLANATION OF COLUMNS . . . . . F-2
F-2 MANDATORY REPLACEMENT PARTS LIST . . . . . F-3

## F-1 EXPLANATION OF COLUMNS

**a. Column (1) — ITEM NO.**

This number is assigned to the entry in the listing for cross-referencing to the part number.

**b. Column (2) — PN**

Indicates the PN used by the manufacturer (individual, company, firm, corporation, or Government activity), that controls the design and characteristics of the item by means of its engineering drawings, specification, standards, and inspection requirements to identify an item or range of items.

**c. Column (3) — DESCRIPTION**

This column contains the nomenclature that appears on the first page of the task under the subheading “Materials/ Parts.”

## F-2 MANDATORY REPLACEMENT PARTS LIST

| ( 1 ) ITEM NO. | (2) PN | (3) DESCRIPTION |
|---|---|---|
| | M83248-1-235 | Seal |
| 2 | MS16562-35 | Spring pin |
| 3 | MS16624-1059 | Lockring |
| 4 | MS16624-1066 | Snap ring |
| 5 | MS16624-18 | Retaining ring |
| 6 | MS172281 | Key washer |
| 7 | MS190070-052 | Key washer |
| 8 | MS19070-152 | Key washer |
| 9 | MS20995-C41 | Lockwire |
| 10 | MS20995C20 | Lockwire |
| 11 | MS21042-5 | Self-locking nut |
| 12 | MS24665-229 | Cotter pin |
| 13 | MS24665-629 | Cotter pin |
| 14 | MS28775-222 | Preformed packing |
| 15 | MS29513 | Seal |
| 16 | MS29513-115 | Preformed packing |
| 17 | MS29513-15 | Preformed packing |
| 18 | MS29513-154 | Seal |
| 19 | MS29513-251 | Preformed packing |
| 20 | MS29513-261 | Preformed packing |
| 21 | MS29513-260 | Preformed packing |
| 22 | MS3367-5-9 | Strap |
| 23 | MS35334-21 | Lockwasher |
| 24 | MS35335-31 | Lockwasher |
| 25 | MS35335-35 | Lockwasher |
| 26 | MS35335-37 | Lockwasher |
| 27 | MS35335-91 | Lockwasher |
| 28 | MS35338-138 | Lockwasher |
| 29 | MS35338-42 | Lockwasher |
| 30 | MS35338-43 | Lockwasher |
| 31 | MS35338-44 | Lockwasher |
| 32 | MS35338-46 | Lockwasher |
| 33 | MS35338-60 | Lockwasher |
| 34 | MS35338-61 | Lockwasher |
| 35 | MS35338-63 | Lockwasher |
| 36 | MS35338-64 | Lockwasher |
| 37 | MS35338-65 | Lockwasher |
| 40 | MS35338-66 | Lockwasher |
| 39 | MS35338-67 | Lockwasher |
| 40 | MS35338-7 | Lockwasher |

## F-2 MANDATORY REPLACEMENT PARTS LIST — CONTINUED

| (1) ITEM NO. | (2) PN | (3) DESCRIPTION |
|---|---|---|
| 41 | MS35338-8 | Lockwasher |
| 42 | MS35358-63 | Lockwasher |
| 43 | MS35489-425 | Grommet |
| 44 | MS51007-10 | Gasket |
| 45 | MS51007-13 | Basket |
| 46 | MS51915-36-1 | Seal |
| 47 | MS9021-034 | Preformed packing |
| 48 | MS9021-037 | Preformed packing |
| 49 | MS9021-254 | Preformed packing |
| 50 | MA9021-263 | Preformed packing |
| 51 | 178768-22 | Preformed packing |
| 52 | 1730051-1 | Preformed packing |
| 53 | 10898034 | Gasket |
| 54 | 10898036 | Gasket |
| 55 | 10898038 | Gasket |
| 56 | 10900537 | Brushes |
| 57 | 10900571 | Gasket |
| 58 | 10900572 | Gasket |
| 59 | 10906665 | Gasket |
| 60 | 10920615 | Gasket |
| 61 | 10921767 | Seal |
| 62 | 10942143 | Gasket |
| 63 | 10954677 | Gasket |
| 64 | 11605391 | Gasket |
| 65 | 11669687 | Seal |
| 66 | 12268242 | Seal |
| 67 | 12268248 | Seal |
| 68 | 12289974 | Gasket |
| 69 | 20-12-5 | Lockwasher |
| 70 | 21-2-5 | Lockwasher |
| 71 | 360-8023-03 | Seal |
| 72 | 4-060115B | Compression sleeve |
| 73 | 475067 | Gasket |
| 74 | 488558 | Screw |
| 75 | 488755 | Blind rivet |
| 76 | 488756 | Nut |
| 77 | 50-099 | Gasket |
| 78 | 5162811 | Split cone |
| 79 | 5703549 | Lockwasher |
| 80 | 5703549 | Preformed packing |

| (1)<br>ITEM NO. | 2<br>PN | 3<br>DESCRIPTION |
|---|---|---|
| 81 | 6220-21 | Lockwasher |
| 82 | 703349 | Gasket |
| 83 | 7718488 | Gasket |
| 84 | 7962191 | Seal |
| 85 | 8712442 | Gasket |
| 86 | 8712448 | Gasket |
| 87 | 900010-32C | Lockwire |
| 88 | 9419742 | Screw |

# INDEX

CONTENTS PAGE

## A

Aircleaner . . . . . 1-9,5-25
Air cleaner blower motor . . . . . 5-25
Troubleshooting . . . . . 3-3
Air intake system . . . . . 5-1

## B

Ball and roller bearings . . . . . 2-3,2-5
Basic issue item, location of . . . . . 1-12
Bearings, ball and roller . . . . . 2-3,2-5
Bilge pump . . . . . 9-8
Troubleshooting . . . . . 3-12
Bleeding winterization kit lines. . . . . 10-22
Blower motor . . . . . 10-36
Bulkhead-to-driver's instrument panel wiring harness . . . . . 7-48
Bulkhead-to-headlights/bilge pump wiring harness . . . . . 7-24
Bulkhead-to-portable instrument panel wiring harness (engine model 7083-7391). . . . . 7-38
Bulkhead-to-portable instrument panel wiring harness (engine model 7083-7396). . . . . 7-28

## C

Channel group . . . . . 5-22
Circuit identification . . . . . 7-4,7-6
Cleaning . . . . . 2-5
Components
Engine-related. . . . . 4-4
Hull-related . . . . . 9-1
Location of major. . . . . 1-10
Transmission . . . . . 4-4
Coolant heater . . . . . 10-24
Coolant pump . . . . . 4-9
Cooling fan drive . . . . . 6-2,6-4
Cooling fan, vaneaxial . . . . . 6-11,6-13
Cooling system . . . . . 6-1
Troubleshooting. . . . . 3-9
Corrosion, prevention and control . . . . . 1-8
Coupler . . . . . 4-20
Crankshaft . . . . . 4-22

## D

Damper, vibration . . . . . ...4-22
Data plates . . . . . ...9-16
Data, equipment . . . . . ...1-15
Destruction of materiel and equipment . . . . . ...1-5
Differences between models . . . . . ...1-14
Draining fuel tanks . . . . . ...5-10

CONTENTS PAGE

## D — CONTINUED

Driver's bulkhead-to-master relay wiring harness (M109A4/M109A5) (engine model 7083-7391) . . . . . 7-20
Driver's bulkhead-to-master relay wiring harness (M109A4/M109A5) (engine model 7083-7396) . . . . . 7-16
Durable items. . . . . B-1

## E

Electric fuel pump. . . . . 5-2
Electrical system. . . . . 1-8,7-1
Testing and test equipment . . . . . 2-5
Troubleshooting . . . . . 3-4,3-15
Electrical testing and test equipment . . . . . 2-5
Engine disconnect bracket-to-bulkhead wiring harness (M109A2/M109A3) (engine model 7083-7391 ) . . . . . 7-12
Engine disconnect bracket-to-bulkhead wiring harness (M109A2/M109A3) (engine model 7083-7396). . . . . 7-8
Engine . . . . . 1-8,1-15,3-3,4-4
Parts . . . . . 4-3
Driven pump . . . . . 4-6
Related components . . . . . 4-4
Separation from transmission and transfer assembly . . . . . 4-15
Troubleshooting . . . . . 3-3
Equipment
Data . . . . . 1-15
Improvements and recommendations, reporting . . . . . 1-6
Operation and description . . . . . 1-17
Destruction of . . . . . 1-5
Electrical testing and test . . . . . 2-5
Expendable and durable items . . . . . B-1

## F

Fan drive gearbox . . . . . 6-13
Fan drive, cooling . . . . . 6-4
Fan, personnel airduct ventilating. . . . . 9-2
Fan, vaneaxial cooling . . . . . 6-11,6-13
Filters
Primary fuel . . . . . 4-6
Secondary fuel . . . . . 4-8
Final drive . . . . . 1-17,8-1,8-2
Troubleshooting . . . . . 3-4
Flame heater, troubleshooting.. . . . . 3-3
Forms, maintenance . . . . . 1-5
Fuel filter . . . . . 4-6
Primary . . . . . 4-6
Secondary . . . . . 4-8
Fuel pumps . . . . . 5-2
Fuel system . . . . . 5-1
Troubleshooting . . . . . 3-3

CONTENTS PAGE

Fuel tanks . . . . . 5-1
Draining . . . . . 5-10
Heat shield. . . . . 5-36
Pads . . . . . 5-20
Repair . . . . . 5-14
Straps . . . . . .
Lower. . . . . 5-13
Upper. . . . . 5-13

G

Gearbox, fan drive . . . . . 6-13
General hull maintenance instructions. . . . . 2-2
General information . . . . . 1-5
Glow plug system, troubleshooting . . . . . 3-5

H

Hanger assemblies . . . . . 5-2
Heat shield, fuel tank . . . . . 5-36
Heater, personnel . . . . . 3-8
Hull electrical components . . . . . 7-78
Hull-mounted pads . . . . . 5-20
Hull-related components . . . . . 9-1

I

Identification list, tool . . . . . C-1
Illustrated list of manufactured items . . . . . D-1
Instructions, general troubleshooting . . . . . 3-1

J

Joints, universal . . . . . 6-2

K

Kit, winterization . . . . . 10-1

L

Limits, torque . . . . . E-1
Location
Basic issue items . . . . . 1-12
Major components . . . . . 1-10
Lubrication . . . . . 2-7

**CONTENTS** PAGE

## M

Maintenance forms . . . . . 1-5
Mandatory replacement parts. . . . . F-1
Manufactured items . . . . . D-1
Massing . . . . . 4-20
Materiel, destruction of . . . . . 1-5
Motor, air cleaner blower . . . . . 5-25
Motor, blower . . . . . 10-36

## N

Nomenclature, names, and designations . . . . . 1-6

## 0

Operation and description, equipment . . . . . 1-17

## P

Pad
Fuel tank . . . . . 5-20
Hull-mounted . . . . . 5-20
Painting . . . . . 2-7
Parts
Engine . . . . . 4-3
Mandatory replacement . . . . . F-1
Repair . . . . . 2-2
Personnel airduct ventilating fan . . . . . 9-2
Personnel heater, troubleshooting. . . . . 3-11
Personnel ventilation blower . . . . . 9-2
Troubleshooting . . . . . 3-11
Plates, data . . . . . 9-16
Power lead (M109A2/M109A3) . . . . . 7-67
Power lead (M109A4/M109A5) . . . . . 7-72
Power lead wiring harness (M109A2). . . . . 7-60
Powerplant . . . . . 1-8
Principles of operation . . . . . 1-17
Pump
Bilge . . . . . 9-8
Coolant . . . . . 4-9
Engine-driven . . . . . 4-6
Electric fuel . . . . . 5-2

## Q

Quality assurance . . . . . 1-6
Quick guide to troubleshooting . . . . . 3-2

CONTENTS PAGE

## R

Records, maintenance . . . . . 1-5
Rectifier (M109A2/M109A3) . . . . . 7-78
Rectifier (M109A4/M109A5) . . . . . 7-89
References . . . . . A-1
Repair parts . . . . . 2-2
Repair, fuel tank . . . . . 5-14
Reporting, equipment improvements and recommendations . . . . . 1-6
Road wheel arm . . . . . 8-6

## S

Safety, care, and handling . . . . . 1-7
Scope . . . . . 1-5
Shield, fuel tank heat . . . . . 5-36
Shipment, preparation for . . . . . 1-6,4-2
Shipping and storage containers. . . . . 4-2
Shroud, vaneaxial cooling fan..... . . . . 6-11
Special tools . . . . . 2-2
Spindle, upper road wheel arm. . . . . 8-6
Sprockets . . . . . 1-17
Storage, preparation for . . . . . 1-6,4-2
Straps, fuel tank retaining . . . . . 5-22
Suspension . . . . . 1-9, 1-17,8-6
Troubleshooting . . . . . 3-5

## T

Tanks, fuel . . . . . 5-10
Thread inserts, screw . . . . . 2-4
Tool identification list . . . . . C-1
Tools, special . . . . . 2-2
Torque limits . . . . . E-1
Tracks . . . . . 1-17,8-1
Transfer assembly . . . . . 4-15
Transmission . . . . . 1-8,1-16,4-4,4-15
Troubleshooting . . . . . 3-3
Trunnion cap . . . . . 4-23
Troubleshooting . . . . . 3-1
Air cleaner blower motor . . . . . 3-3
Bilge pump . . . . . 3-5,312
Cooling system . . . . . 3-10
Electrical system . . . . . 3-4,3-15
Engine . . . . . 3-3,3-6
Final drive assembly . . . . . 3-4
Flame heater . . . . . 3-3,3-8
Fuel system . . . . . 3-3
General instructions . . . . . 3-2
Glow plug system . . . . . 3-5
Personnel heater . . . . . 3-5

CONTENTS PAGE

## T — CONTINUED

Personnel ventilation blower... . . . . .3-5,3-11
Quick guide to . . . . . 3-2
Suspension system . . . . . ...3-5
Transmission . . . . . ...3-3,3-7
Trunnion cap, replacement of . . . . . ...4-23

## U

Universal joints . . . . . ...6-2
Upper spindle, road wheel arm.. . . . . ...8-6

## V

Ventilation, equipment . . . . . ...9-2
Vibration damper, crankshaft . . . . . ...4-22

## W

Warranty information . . . . . ...1-7
Welding . . . . . ...2-5
Winterization kit . . . . . ...10-1
Components . . . . . ...10-24
Bleeding lines . . . . . ...10-22
Installation of . . . . . ...10-2
Wiring harness listing . . . . . ...7-2
Wiring harness
Power lead (M109A2) . . . . . .7-60
Bulkhead-to-driver's instrument panel . . . . . .7-48
Bulkhead-to-headlights/bilge pump . . . . . ...7-24
Bulkhead-to-portable instrument panel (engine model 7083-7391). . . . . ..7-38
Bulkhead-to-portable instrument panel (engine model 7083-7396). . . . . ..7-28
Driver's bulkhead-to-master relay (M109A4/M109A5) (engine model 7083-7391) . . . . . 7-20
Driver's bulkhead-to-master relay (M109A4/M109A5)(engine model 7083-7396) . . . . . ...7-16
Engine disconnect bracket-to-bulkhead (M109A2/M109A3)(engine model083-7391) . . . . . 7-12
Engine disconnect bracket-to-bulkhead (M109A2/M109A3)(enginemodel7083-7396) . . . . . 7-8

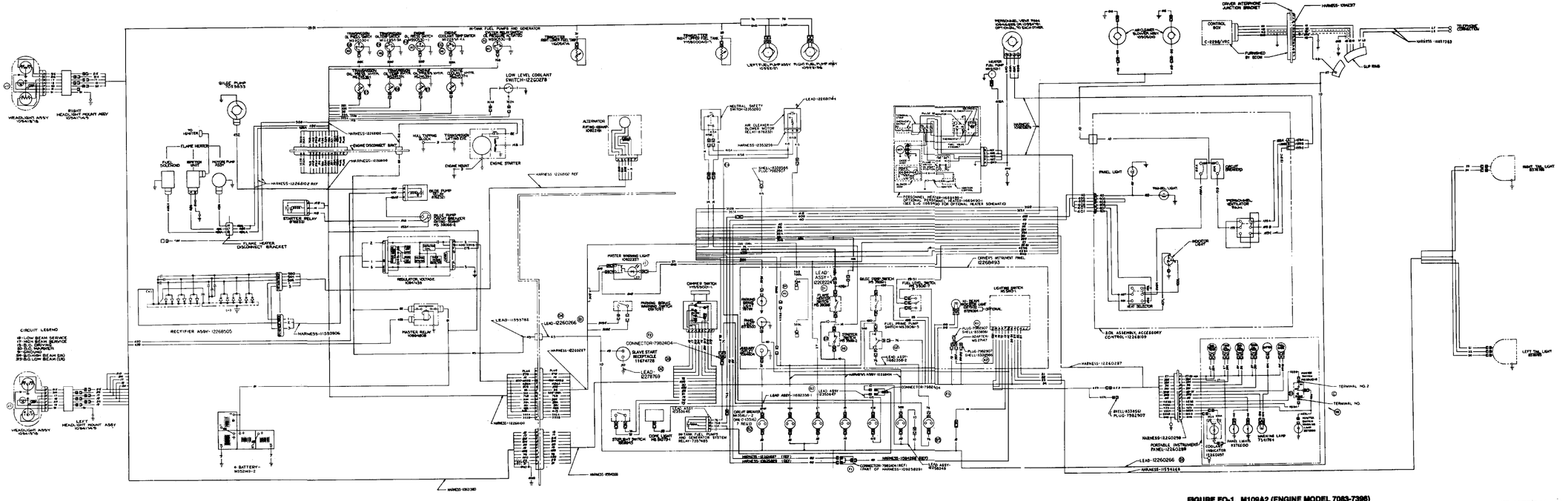


FIGURE FO-1. M109A2 (ENGINE MODEL 7083-7396) HULL ELECTRICAL SCHEMATIC.

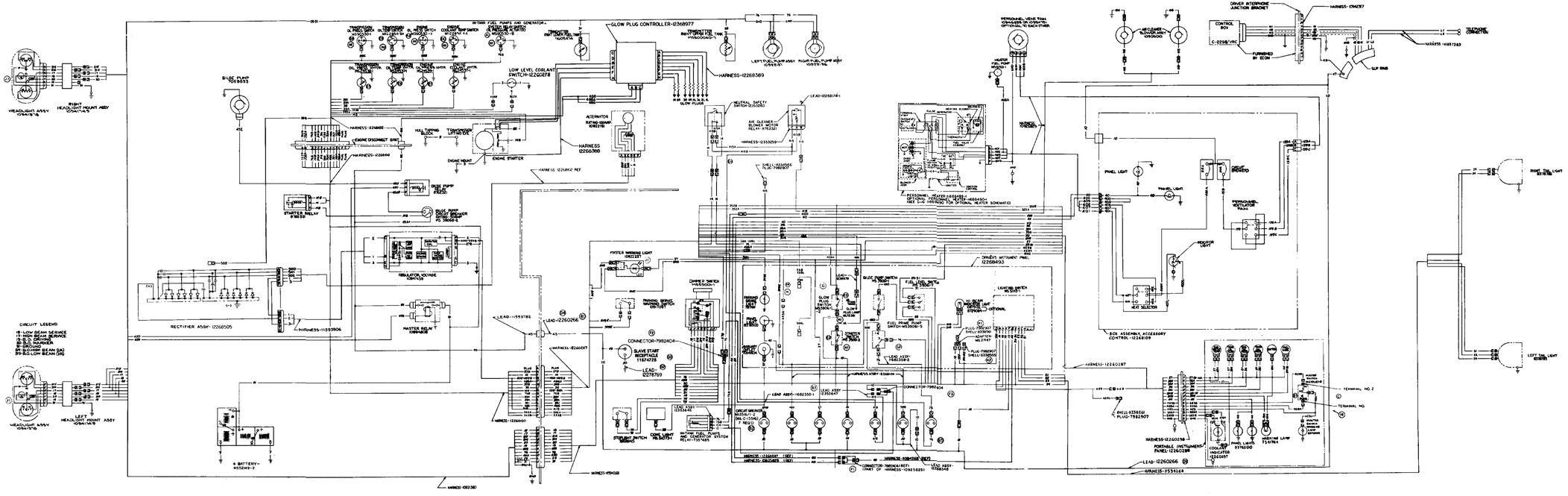
GLOW PLUG CONTROLLER-12368977
HARNESS-12268389
LOW LEVEL COOLANT SWITCH-12262278
BILGE PUMP 1069933
ENGINE STARTER
ALTERNATOR
STARTER RELAY 5962B
REGULATOR VOLTAGE 10041478
RECTIFIER ASSY-12268505
MASTER RELAY 10041478
MASTER WARNING LIGHT 10962387
CONNECTOR-7982404
SLAVE START RECEPTACLE 11674728
LEAD-12260266
HARNESS-12260287
DRIVER'S INSTRUMENT PANEL 12268493
PANEL LIGHT
TRAVEL LIGHT
VEHICLE LIGHT
INDICATOR LIGHT
HEAT SELECTOR
BOX ASSEMBLY ACCESSORY CONTROL-12268109
PORTABLE INSTRUMENT PANEL-12262288
HARNESS-P594164
LEAD-12260266
TERMINAL NO. 2
TERMINAL NO.
CIRCUIT LEGEND
B-LOW BEAM SERVICE
T-HIGH BEAM SERVICE
D-D.O. MARKER
D-D.O. MARKER
B-GROUND
B-LOW BEAM (SA)
B-LOW BEAM (SR)
HEADLIGHT ASSY 10941978
RIGHT HEADLIGHT MOUNT ASSY 10941479
LEFT HEADLIGHT MOUNT ASSY 10941479
RIGHT TAIL LIGHT 8978
LEFT TAIL LIGHT 8978
TELEPHONE CONNECTION
CONTROL BOX
FURNISHED BY ECM
SLIP RING
HARNESS-12260287
HARNESS-12260266
HARNESS-12260287 (REF)
HARNESS-12260266 (REF)
HARNESS-10962387 (REF)
HARNESS-10962387 (REF)
HARNESS-10962387 (REF)
HARNESS-10962387 (REF)
CONNECTOR-7982404 (REF)
CONNECTOR-7982404 (REF)
CONNECTOR-7982404 (PART OF HARNESS-10962387)
LEAD ASSY-9766348
LEAD ASSY-12262287
LEAD ASSY-12262287
LEAD ASSY-12262287

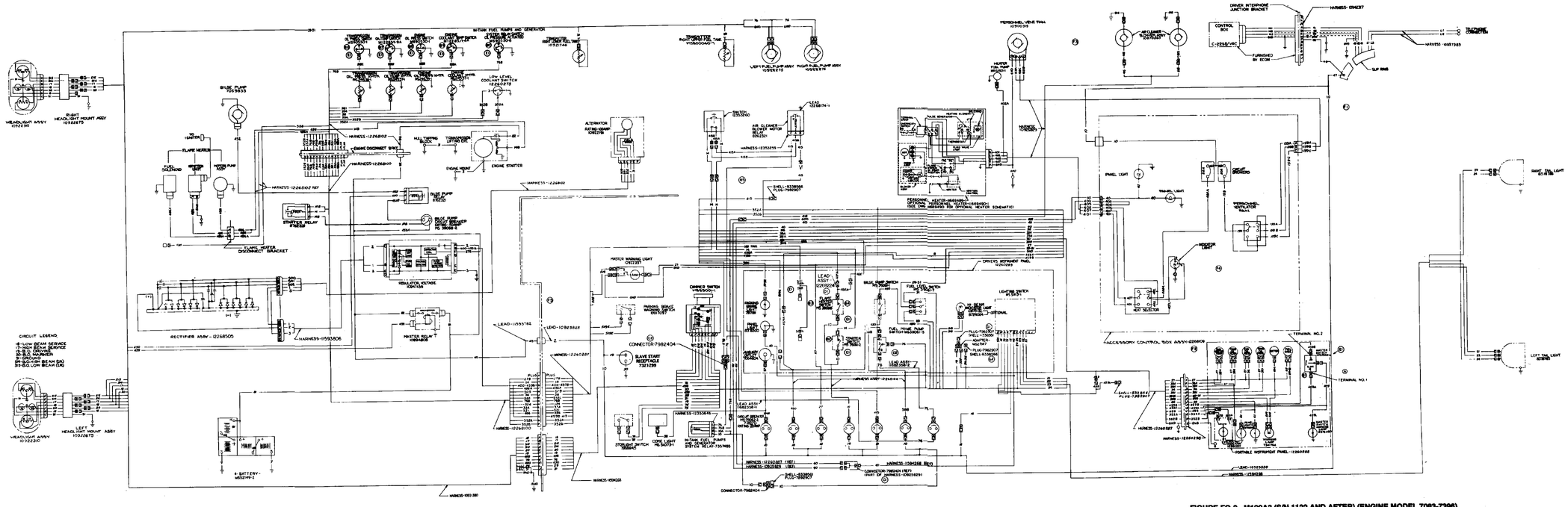


FIGURE FO-3. M109A3 (S/N 1122 AND AFTER) (ENGINE MODEL 7063-7396) HULL ELECTRICAL SCHEMATIC.

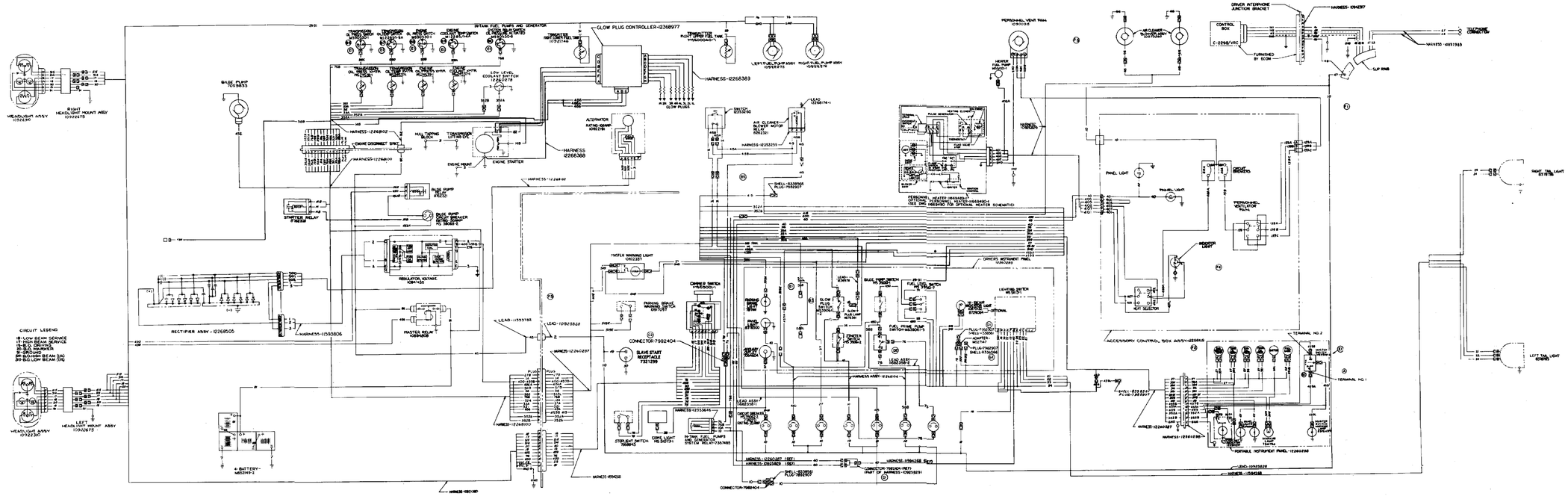


FIGURE FO-4. M109A3 (S/N 1122 AND AFTER) (ENGINE MODEL 7083-7391) HULL ELECTRICAL SCHEMATIC.

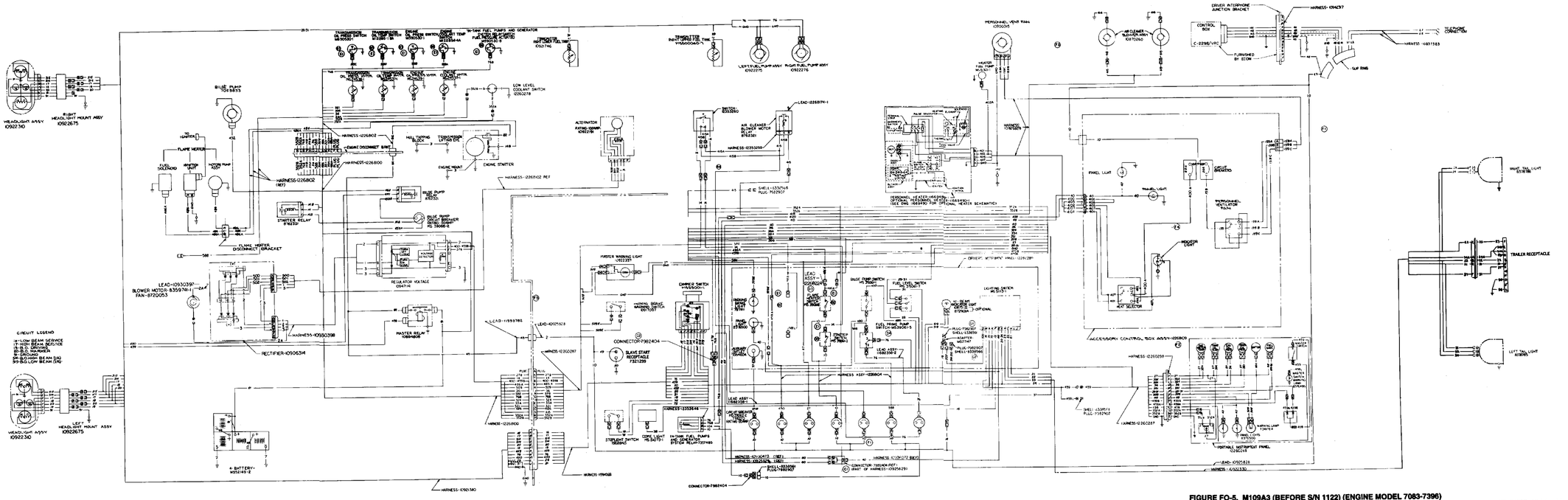
RIGHT HEADLIGHT ASSY 10922340
RIGHT HEADLIGHT MOUNT ASSY 10922675
LEFT HEADLIGHT ASSY 10922340
LEFT HEADLIGHT MOUNT ASSY 10922675
CIRCUIT LEGEND
BILGE PUMP
LOW LEVEL COOLANT SWITCH
ALTERNATOR
ENGINE STARTER
STARTER RELAY
ENGINE HEATER DISCONNECT BRACKET
BLOWER MOTOR
REGULATOR VOLTAGE
MASTER RELAY
RECTIFIER
BATTERY
HARNESS-1260380
HARNESS-1260287
HARNESS-1260280
HARNESS-1260259
HARNESS-1260330
HARNESS-1260829
HARNESS-1260804
HARNESS-1353246
HARNESS-1353250
HARNESS-1353252
HARNESS-1353254
HARNESS-1353256
HARNESS-1353258
HARNESS-1353260
HARNESS-1353262
HARNESS-1353264
HARNESS-1353266
HARNESS-1353268
HARNESS-1353270
HARNESS-1353272
HARNESS-1353274
HARNESS-1353276
HARNESS-1353278
HARNESS-1353280
HARNESS-1353282
HARNESS-1353284
HARNESS-1353286
HARNESS-1353288
HARNESS-1353290
HARNESS-1353292
HARNESS-1353294
HARNESS-1353296
HARNESS-1353298
HARNESS-1353300
HARNESS-1353302
HARNESS-1353304
HARNESS-1353306
HARNESS-1353308
HARNESS-1353310
HARNESS-1353312
HARNESS-1353314
HARNESS-1353316
HARNESS-1353318
HARNESS-1353320
HARNESS-1353322
HARNESS-1353324
HARNESS-1353326
HARNESS-1353328

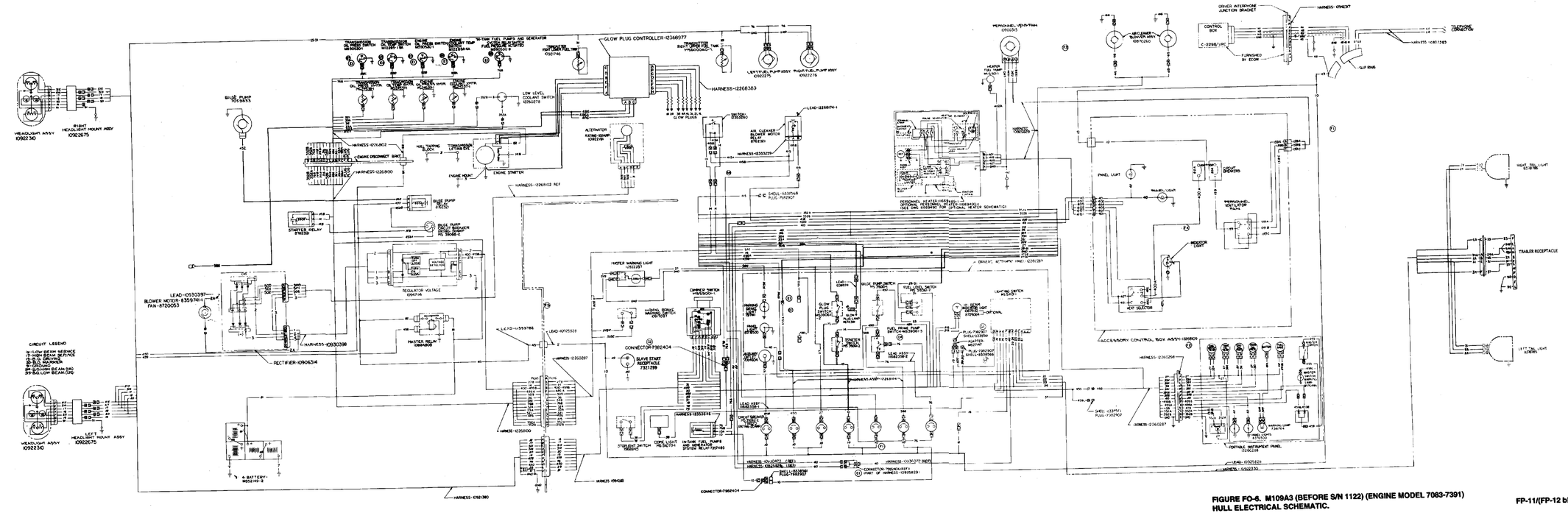
GLOW PLUG CONTROLLER-12368977
HARNESS-12268383
LEFT FUEL PUMP ASSY 10922275
RIGHT FUEL PUMP ASSY 10922276
LOW LEVEL COOLANT SWITCH 10962278
BILGE PUMP 10928833
WEADLIGHT ASSY 10922330
RIGHT HEADLIGHT MOUNT ASSY 10922675
LEFT HEADLIGHT MOUNT ASSY 10922675
ENGINE STARTER
ALTERNATOR
GLOW PLUGS
AIR CLEANER-BLOWER MOTOR 8757231
STARTER RELAY 8782230
REGULATOR VOLTAGE 10967116
LEAD-10930397-BLOWER MOTOR-8359741-1 FAN-8720053
HARNESS-10930398
RECTIFIER-10906314
MASTER WARNING LIGHT 10922231
MASTER BULB OVERDRIVE
CONNECTOR-7982404
SLAVE START RECEPTACLE 7321299
CIRCUIT LEGEND
4-BATTERY-M52/M2-2
HARNESS-10962130
HARNESS-10962100
HARNESS-12260287
HARNESS-12260258
HARNESS-12260269
HARNESS-12353246
HARNESS-12353244
HARNESS-12353259
HARNESS-12268102 REF
HARNESS-12268103
HARNESS-12268800
HARNESS-12268803
HARNESS-12268104
HARNESS-12268105
HARNESS-12268106
HARNESS-12268107
HARNESS-12268108
HARNESS-12268109
HARNESS-12268110
HARNESS-12268111
HARNESS-12268112
HARNESS-12268113
HARNESS-12268114
HARNESS-12268115
HARNESS-12268116
HARNESS-12268117
HARNESS-12268118
HARNESS-12268119
HARNESS-12268120
HARNESS-12268121
HARNESS-12268122
HARNESS-12268123
HARNESS-12268124
HARNESS-12268125
HARNESS-12268126
HARNESS-12268127
HARNESS-12268128
HARNESS-12268129
HARNESS-12268130
HARNESS-12268131
HARNESS-12268132
HARNESS-12268133
HARNESS-12268134
HARNESS-12268135
HARNESS-12268136
HARNESS-12268137
HARNESS-12268138
HARNESS-12268139
HARNESS-12268140
HARNESS-12268141
HARNESS-12268142
HARNESS-12268143

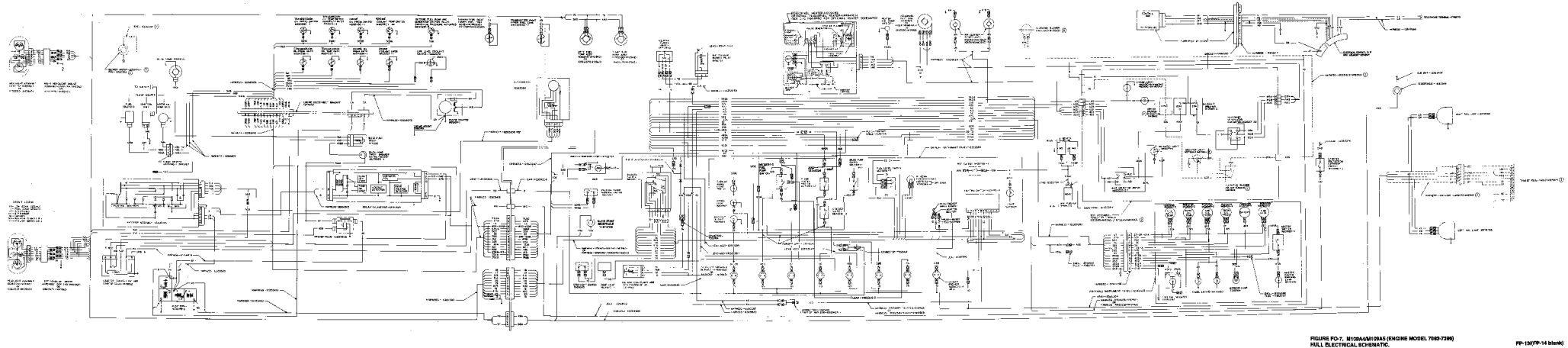

FIGURE FO-7. M109A6/M109A5 (ENGINE MODEL 7083-7396)
HULL ELECTRICAL SCHEMATIC.

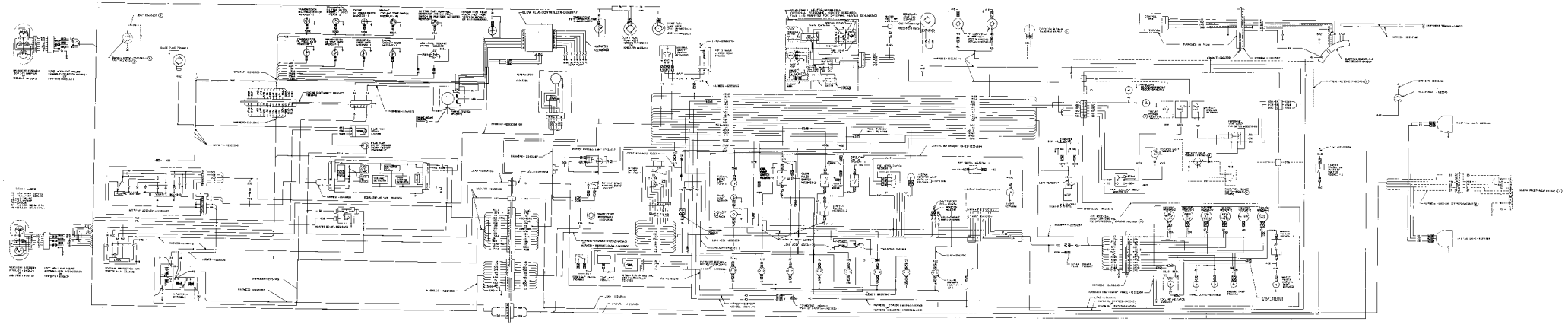

FIGURE FO-8. M109A4/M109A5 (ENGINE MODEL 7083-7391)
HULL ELECTRICAL SCHEMATIC.

By Order of the Secretary of the Army:

GORDON R. SULLIVAN
*General, United States Army*
*Chief of Staff*

Official:

MILTON H. HAMILTON
*Administrative Assistant to-the*
*Secretary of the Amy*
07482

DISTRIBUTION:

To be distributed in accordance with DA Form 12-37-E, block 1661, requirements for TM 9–2350-311-34-1 .

* U.S. GOVERNMENT PRINTING OFFICE: 1994-546-017/00171

RECOMMENDED CHANGES TO EQUIPMENT TECHNICAL PUBLICATIONS

**SOMETHING WRONG** WITH THIS PUBLICATION?

FROM: (PRINT YOUR UNIT'S COMPLETE ADDRESS)
Your mailing address

DATE SENT
Date you fill out this form

| PUBLICATION NUMBER | PUBLICATION DATE | PUBLICATION TITLE |
|---|---|---|
| TM X-XXXX-XXX-XX | Date of TM | Title of TM |

BE EXACT. PIN-POINT WHERE IT IS

| PAGE NO | PARA-GRAPH | FIGURE NO | TABLE NO | IN THIS SPACE TELL WHAT IS WRONG AND WHAT SHOULD BE DONE ABOUT IT: |
|---|---|---|---|---|
| 3 | | 2 | | Item 10. Change illustration. Reason: Tube end shown assembled on wrong side of lever cam. |
| 109 | | 51 | | Item 3. The NSN and P/N are not listed on the AMDF nor the MCRL. Request correct NSN and P/N be furnished. |
| 2-8 | | | 2-1 | Preventive Maintenance Checks and Services. Item 7 under "Items to be inspected" should be changed to read as follows: Firing linkage and firing mechanism pawl. |
| 12 | 1-6a | | | Since there are both 20- and 30- round magazines for this rifle, data on both should be listed. |

SAMPLE

PRINTED NAME, GRADE OR TITLE, AND TELEPHONE NUMBER

SIGN HERE

DA FORM 1 JUL 79 2028-2

PREVIOUS EDITIONS ARE OBSOLETE.

P.S.--IF YOUR OUTFIT WANTS TO KNOW ABOUT YOUR RECOMMENDATION MAKE A CARBON COPY OF THIS AND GIVE IT TO YOUR HEADQUARTERS

REVERSE OF DA FORM 2028-2

TEAR ALONG PERFORATED LINE

FILL IN YOUR UNIT'S ADDRESS

FOLD BACK

DEPARTMENT OF THE ARMY

OFFICIAL BUSINESS

SAMPLE

Commander
U.S. Army Tank-Automotive and Armaments Command
ATTN: AMSTA-MMAA
Warren, MI 48397-5000

RECOMMENDED CHANGES TO EQUIPMENT TECHNICAL PUBLICATIONS

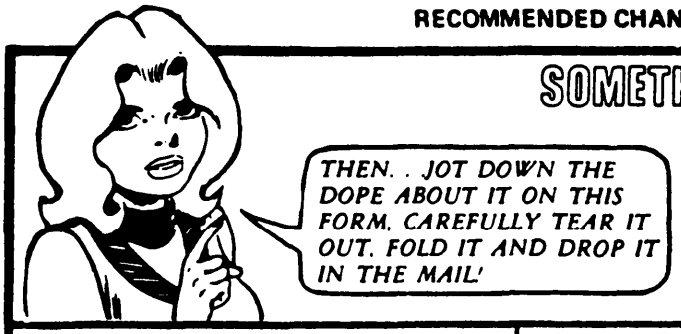


**SOMETHING WRONG WITH THIS PUBLICATION?**

FROM: (PRINT YOUR UNIT'S COMPLETE ADDRESS)

DATE SENT

| PUBLICATION NUMBER | PUBLICATION DATE | PUBLICATION TITLE |
|---|---|---|
| TM 9-2350-311-34-1 | 19 September 1994 | HULL, POWERPLANT, DRIVE HOWITZER, MEDIUM, SELF-PROPELLED, 155MM |

BE EXACT. . .PIN-POINT WHERE IT IS

| PAGE NO | PARA-GRAPH | FIGURE NO | TABLE NO |
|---|---|---|---|
| | | | |

IN THIS SPACE TELL WHAT IS WRONG AND WHAT SHOULD BE DONE ABOUT IT:

PRINTED NAME, GRADE OR TITLE, AND TELEPHONE NUMBER

SIGN HERE

DA FORM 1 JUL 79 2028-2

PREVIOUS EDITIONS ARE OBSOLETE.

P.S.--IF YOUR OUTFIT WANTS TO KNOW ABOUT YOUR RECOMMENDATION MAKE A CARBON COPY OF THIS AND GIVE IT TO YOUR HEADQUARTERS.

REVERSE OF DA FORM 2028-2

FILL IN YOUR UNIT'S ADDRESS

FOLD BACK

DEPARTMENT OF THE ARMY

OFFICIAL BUSINESS

Commander
U.S. Army Tank-Automotive and Armaments Command
ATTN: AMSTA-MMAA
Warren, MI 48397-5000

TEAR ALONG PERFORATED LINE

RECOMMENDED CHANGES TO EQUIPMENT TECHNICAL PUBLICATIONS

**SOMETHING WRONG WITH THIS PUBLICATION?**

FROM: (PRINT YOUR UNIT'S COMPLETE ADDRESS)

DATE SENT

| PUBLICATION NUMBER | PUBLICATION DATE | PUBLICATION TITLE |
|---|---|---|
| TM 9-2350-311-34-1 | 19 September 1994 | HULL, POWERPLANT, DRIVE HOWITZER, MEDIUM, SELF-PROPELLED, 155MM |

BE EXACT. PIN-POINT WHERE IT IS

| PAGE NO | PARA-GRAPH | FIGURE NO | TABLE NO |
|---|---|---|---|
| | | | |

IN THIS SPACE TELL WHAT IS WRONG AND WHAT SHOULD BE DONE ABOUT IT:

PRINTED NAME, GRADE OR TITLE, AND TELEPHONE NUMBER

SIGN HERE.

DA FORM 1 JUL 79 2028-2

PREVIOUS EDITIONS ARE OBSOLETE.

P.S.--IF YOUR OUTFIT WANTS TO KNOW ABOUT YOUR RECOMMENDATION MAKE A CARBON COPY OF THIS AND GIVE IT TO YOUR HEADQUARTERS.

REVERSE OF DA FORM 2028-2

FILL IN YOUR UNIT'S ADDRESS

FOLD BACK

DEPARTMENT OF THE ARMY

OFFICIAL BUSINESS

Commander
U.S. Army Tank-Automotive and Armaments Command
ATTN: AMSTA-MMAA
Warren, MI 48397-5000

TEAR ALONG PERFORATED LINE

# THE METRIC SYSTEM AND EQUIVALENTS

## LINEAR MEASURE

1 Centimeter=10 Milimeters=0.01 Meters=0.3937 Inches
1 Meter=100 Centimeters=1000 Millimeters=39.37 Inches
1 Kilometer=1000 Meters=0.621 Miles

## WEIGHTS

1 Gram=0.001 Kilograms=1000 Milligrams=0.035 Ounces
1 Kilogram=1000 Grams=2.2 Lb
1 Metric Ton=1000 Kilograms=1 Megagram=1.1 Short Tons

## LIQUID MEASURE

1 Milliliter=0.001 Liters=0.0338 Fluid Ounces
1 Liter=1000 Milliliters=33.82 Fluid Ounces

## SQUARE MEASURE

1 Sq Centimeter=100 Sq Millimeters=0.155 Sq Inches
1 Sq Meter=10,000 Sq Centimeters=10.76 Sq Feet
1 Sq Kilometer=1,000,000 Sq Meters=0.386 Sq Miles

## CUBIC MEASURE

1 Cu Centimeter=1000 Cu Millimeters=0.06 Cu Inches
1 Cu Meter=1,000,000 Cu Centimeters=35.31 Cu Feet

## TEMPERATURE

5/9 (° F – 32) = ° C
212° Fahrenheit is equivalent to 100° Celsius
90° Fahrenheit is equivalent to 32.2° Celsius
32° Fahrenheit is equivalent to 0° celsius
9/5 C° + 32 = F°

## APPROXIMATE CONVERSION FACTORS

| TO CHANGE | TO | MULTIPLY BY |
|---|---|---|
| Inches | Centimeters | [illegible]40 |
| Feet | Meters | 0.305 |
| Yards | Meters | 0.914 |
| Miles | Kilometers | 1.609 |
| Square Inches | Square Centimeters | 6.451 |
| Square Feet | Square Meters | 0.093 |
| Square Yards | Square Meters | 0.836 |
| Square Miles | Square Kilometers | 2.590 |
| Acres | Square Hectometers | 0.405 |
| Cubic Feet | Cubic Meters | 0.028 |
| Cubic Yards | Cubic Meters | 0.765 |
| Fluid Ounces | Milliliters | 29.573 |
| Pints | Liters | 0.473 |
| Quarts | Liters | 0.946 |
| Gallons | Liters | 3.785 |
| Ounces | Grams | 28.349 |
| Pounds | Kilograms | 0.454 |
| Short Tons | Metric Tons | 0.907 |
| Pound-Feet | Newton-Meters | 1.356 |
| Pounds per Square Inch | Kilopascals | 6.895 |
| Miles per Gallon | Kilometers per Liter | 0.425 |
| Miles per Hour | Kilometers per Hour | 1.609 |

| TO CHANGE | TO | MULTIPLY BY |
|---|---|---|
| Centimeters | Inches | 0.394 |
| Meters | Feet | 3.280 |
| Meters | Yards | 1.094 |
| Kilometers | Miles | 0.621 |
| Square Centimeters | Square Inches | 0.155 |
| Square Meters | Square Feet | 10.764 |
| Square Meters | Square Yards | 1.196 |
| Square Kilometers | Square Miles | 0.386 |
| Square Hectometers | Acres | 2.471 |
| Cubic Meters | Cubic Feet | 35.315 |
| Cubic Meters | Cubic Yards | 1.308 |
| Milliliters | Fluid Ounces | 0.034 |
| Liters | Pints | 2.113 |
| Liters | Quarts | 1.057 |
| Liters | Gallons | 0.264 |
| Grams | Ounces | 0.035 |
| Kilograms | Pounds | 2.205 |
| Metric Tons | Short Tons | 1.102 |
| Newton-Meters | Pound-Feet | 0.738 |
| Kilopascals | Pounds per Square Inch | 0.145 |
| Kilometers per Liter | Miles per Gallon | 2.354 |
| Kilometers per Hour | Miles per Hour | 0.621 |

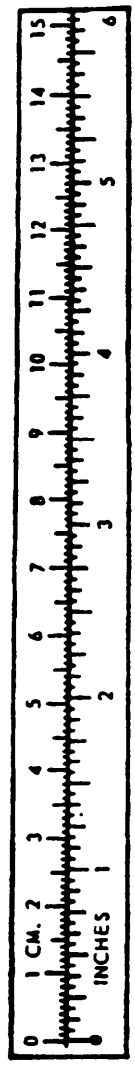

**PIN: 061100-000**