EPA/625/R-99/003
June 2001

Guide to Industrial Assessments for Pollution Prevention and Energy Efficiency

U.S. Environmental Protection Agency
Office of Research and Development
National Risk Management Research Laboratory
Center for Environmental Research Information
Cincinnati, Ohio

NOTICE

The U.S. Environmental Protection Agency through its Office of Research and Development funded and managed the research described here under Contract #68-C7-0011, Work Assignment 21, to Science Applications International Corporation. It has been subjected to the Agency's peer and administrative review and has been approved for publication as an EPA document. Mention of trade names or commercial products does not constitute endorsement or recommendation for use.

FOREWORD

The U.S. Environmental Protection Agency is charged by Congress with protecting the Nation's land, air, and water resources. Under a mandate of national environmental laws, the Agency strives to formulate and implement actions leading to a compatible balance between human activities and the ability of natural systems to support and nurture life. To meet this mandate, EPA's research program is providing data and technical support for solving environmental problems today and building a science knowledge base necessary to manage our ecological resources wisely, understand how pollutants affect our health, and prevent or reduce environmental risks in the future.

The National Risk Management Research Laboratory (NRMRL) is the Agency's center for investigation of technological and management approaches for preventing and reducing risks from pollution that threaten human health and the environment. The focus of the Laboratory's research program is on methods and their cost-effectiveness for prevention and control of pollution to air, land, water, and subsurface resources; protection of water quality in public water systems; remediation of contaminated sites, sediments and ground water; prevention and control of indoor air pollution; and restoration of ecosystems. NRMRL collaborates with both public and private sector partners to foster technologies that reduce the cost of compliance and to anticipate emerging problems. NRMRL's research provides solutions to environmental problems by: developing and promoting technologies that protect and improve the environment; advancing scientific and engineering information to support regulatory and policy decisions; and providing the technical support and information transfer to ensure implementation of environmental regulations and strategies at the national, state, and community levels.

This publication has been produced as part of the Laboratory's strategic long-term research plan. It is published and made available by EPA's Office of Research and Development to assist the user community and to link researchers with their clients.

E. Timothy Oppelt, Director
National Risk Management Research Laboratory

ACKNOWLEDGMENTS

This **Guide to Industrial Assessments for Pollution Prevention and Energy Efficiency** was prepared under the direction and coordination of Emma Lou George of the U.S. EPA's Office of Research and Development, National Risk Management Research Laboratory in Cincinnati, Ohio.

Science Applications International Corporation, (SAIC), of Hampton and Reston, Virginia, revised the original document, **Modern Industrial Assessments:** ***A Training Manual***, Version 1.0b, December, 1995, prepared by The Office of Industrial Productivity and Energy Assessment, at Rutgers, The State University of New Jersey. The training manual preparation was sponsored by an interagency agreement between the Department of Energy's Office of Industrial Technology and the United States Environmental Protection Agency's Office of Research and Development, Pollution Prevention Research Branch. Kelly L. Binkley was the primary SAIC contributor to its revision and reproduction. Brian Westfall of the U.S. EPA National Risk Management Research Laboratory's Sustainable Technology Division and Cam Metcalf of the Kentucky Pollution Prevention Center provided assistance in the development of this guide.

ABSTRACT

This document presents an overview of industrial assessments and the general framework for conducting an assessment. It describes combined assessments for pollution prevention and energy, "industrial assessments", providing guidance to those performing assessments at industrial or other commercial facilities. In addition, basic information about waste generating industrial operations and energy consuming equipment is provided. This guide can be used by both facility personnel to conduct in-house assessments of operations and by third parties who are interested in providing industrial assessments.

Traditionally, assessments have been performed on singular problem areas, focusing on either pollution prevention or energy. An interagency agreement between the USEPA and the Department of Energy combined pollution prevention and energy assessments into industrial assessments, looking at both areas for small and medium size facilities in SIC codes 20-39. A first draft of a training manual describing this industrial assessment methodology was prepared by Rutgers, The State University of New Jersey, in December of 1995.

This **Guide to Industrial Assessments for Pollution Prevention and Energy Efficiency** is organized into four basic sections:

Basic Concepts, Chapters 1- 4.	Assessment methodology, fundamentals of an assessment, and evaluation of pollution prevention and energy conservation opportunities.
Specific Waste Generation Information, Chapter 5.	Industrial operations, waste generated from each operation, and pollution prevention opportunities.
Specific Energy Consumption, **Information**, Chapters 6-10.	Types of energy consuming equipment including electrical equipment, heat generating equipment like boilers, and furnaces, prime movers of energy, thermal applications, and HVAC.
References and Case Studies,	Materials to be used repeatedly such as references, sources of information, and pollution prevention and energy conservation case studies.

This guide is an effort by EPA to contribute to an understanding of both pollution prevention and energy assessments at commercial facilities. Companies from large to small, and government at all levels, as well as assistance providers, could find the information contained in this directory useful.

This report was submitted in fulfillment of Contract #68-C7-0011, Work Assignment 21, by Science Applications International Corporation, under the sponsorship of the U.S. Environmental Protection Agency. This work covers a period from May to September, 1998.

Table of Contents

Executive Summary 1
Chapter 1 Introduction 11
1.1 Document Organization....11
1.2 What is an Industrial Assessment 11
1.3 Benefits of an Industrial Assessment....11
1.4 Who Should Participate in an Industrial Assessment....12
1.5 Establishing a Pollution Prevention Program....12
1.5.1 Management Support 13
1.5.2 Characterize Energy Usage and Waste Generation 13
1.5.3 Conduct Industrial Assessments 14
1.5.4 Review Program Effectiveness....14

Chapter 2 Energy and Pollution prevention Assessments 15
2.1 Pollution Prevention and Energy Conservation....15
2.1.1 Hierarchy 15
2.2 Assessment Methodology....16
2.2.1 Planning and Organization....17
2.2.2 Assessment Phase....18
2.2.2.1 Pre-Assessment Activities 18
2.2.2.2 Assessment....22
2.2.3 Feasibility Analysis Phase....24
2.2.3.1 Prioritization of Opportunities 24
2.2.3.2 Evaluation of Technical and Economic Feasibility 25
2.2.3.3. Generate an Assessment Report....25
2.2.4 Implementation 26
2.3 Example Facility Information Collection....26

Chapter 3 Evaluation Of Energy Conservation And Pollution Prevention Opportunities....39
3.1 Describe the Current Practices 39
3.1.1 Overview of Current Operations....39
3.1.2 Assumptions....40
3.1.3 Impacts....40
3.1.4 Raw Material Costs 40
3.1.5 Energy Costs....40
3.1.5.1 Electric Bills and Rates 40
3.1.5.2 Example of Gas Bills and Gas Rates 42
3.1.5.3 Fuel Oil Rates 43
3.1.6 Waste Management Costs 43
3.1.6.1 Hazardous and Regulated Non-hazardous Waste Disposal....44
3.1.6.2 Solid Waste Disposal....44
3.1.6.3 Air Emission Management Costs and Emission Fees 44
3.1.6.4 Sanitary and Storm Discharge Fees....44
3.2 Describe the Recommended Opportunity 45
3.3 Evaluate the Energy Conservation and Pollution Prevention Benefits 45
3.3.1 Energy Conservation Calculations....45
3.3.2 Pollution Prevention Calculations 46
3.4 Technical Evaluation of Energy Conservation and Pollution Prevention Projects....47
3.5 Economic Evaluation of Energy and Pollution Prevention Project Costs 39
3.5.1 Common Methods of Comparing Financial Performance....49
3.5.1.1 Payback Period 49
3.5.1.2 Net Present Value....49
3.5.1.3 Internal Rate of Return 50
3.5.2 Additional Economic Analysis Tools 51
3.5.2.1 Life-Cycle Cost Analysis 51

3.5.2.2 Total Cost Accounting....52
3.6 Energy Conservation and Pollution Prevention Project Examples....53
3.6.1 Adjust Air Fuel Ration to Improve Boiler Efficiency....53
3.6.1.1 Current Practice and Observations....53
3.6.1.2 Recommended Action....53
3.6.1.3 Anticipated Savings....53
3.6.1.4 Implementation....54
3.6.2 Use Less Hazardous Inks in the Screen Printing Process....54
3.6.2.1 Current Practice and Observations....54
3.6.2.2 Recommended Action....54
3.6.2.3 Anticipated Savings....54
3.6.2.4 Payback Periods....55
3.6.2.5 Implementation....57
3.6.2.6 Net Present Value....57
3.6.2.7 Internal Rate of Return....58

Chapter 4 Sources Of Energy And Pollution....61
4.1 Electric Energy....61
4.1.1 Reduce Electrical Use....62
4.1.1.1 Distribution System....62
4.1.1.2 Use of Electricity in the Industry....63
4.1.2 Power Factor....63
4.1.2.1 Power Factor Improvement....64
4.1.2.2 General Considerations for Power Factor Improvements....66
4.1.3 Electrical Demand/Load Factor Improvement....66
4.1.3.1 Potential Savings....66
4.1.3.2 System Analysis....67
4.1.3.3 Ways to Reduce Demand....67
4.1.4 Reading the Bill....68
4.1.4.1 Example of a Typical Electric Bill....69
4.1.5 The Energy Charge....70
4.1.6 The Demand Charge....71
4.1.7 Power Demand Controls....71
4.1.8 Demand Shifting....71
4.2 Fossil Fuels....72
4.2.1 Energy Conservation Measures for Fossil Fuels....72
4.3 Alternative Energy Sources....73
4.4 Pollution Prevention And Waste Generation....73
4.4.1 Regulatory Requirements....74
4.4.1.1 Air Emission....74
4.4.1.2 Water Discharges....74
4.4.1.3 Solid Waste....74
4.4.1.4 Hazardous Waste....75
4.4.1.5 Record Keeping....75
4.4.2 Sources of Manufacturing Wastes....75
4.4.2.1 Processes Generating Wastes and Types of Wastes Generated....76
4.4.2.2 Industry Compendium of Processes Producing Wastes....76

Chapter 5 Industrial Operations....87
5.1 Office Operations....87
5.1.1 Waste Description....87
5.1.2 Pollution Prevention Opportunities....87
5.1.2.1 Source Reduction....87
5.1.2.2 Recycling....90
5.2 Materials Management/Housekeeping....91
5.2.1 Process Description....91

5.2.2 Waste Description 92
5.2.3 Pollution Prevention Opportunities 92
5.2.3.1 Source Reduction 92
5.2.3.2 Recycling 98
5.3 Facility Maintenance 101
5.3.1 Process Description 101
5.3.2 Waste Description 101
5.3.3 Pollution Prevention Opportunities 101
5.3.3.1 Source Reduction 101
5.3.3.2 Recycling 103
5.4 Metal Working 106
5.4.1 Process Description 107
5.4.2 Waste Description 107
5.4.3 Pollution Prevention Opportunities 108
5.4.3.1 Source Reduction 110
5.4.3.2 Recycling 111
5.5 Degreasing 112
5.5.1 Process Description 112
5.5.2 Waste Description 112
5.5.3 Pollution Prevention Opportunities 112
5.5.3.1 Source Reduction 112
5.5.3.2 Recycling 133
5.6 Chemical Etching 137
5.6.1 Process Description 137
5.6.1.1 Phosphating 137
5.6.1.2 Chromate Conversion Coating 137
5.6.2 Waste Description 138
5.6.3 Pollution Prevention Opportunities 138
5.6.3.1 Source Reduction 139
5.6.3.2 Recycling 143
5.7 Plating Operations 143
5.7.1 Process Description 144
5.7.1.1 Surface Cleaning and Preparation 144
5.7.1.2 Surface Modification 144
5.7.1.3 Rinse 144
5.7.2 Waste Description 144
5.7.3 Pollution Prevention Opportunities 145
5.7.3.1 Source Reduction 146
5.7.3.2 Recycling 154
5.8 Paint Application 156
5.8.1 Process Description 156
5.8.2 Waste Description 156
5.8.3 Pollution Prevention Opportunities 156
5.8.3.1 Source Reduction 156
5.8.3.2 Recycling 166
5.9 Paint Removal 166
5.9.1 Process Description 166
5.9.2 Waste Description 167
5.9.3 Pollution Prevention Opportunities 167
5.9.3.1 Source Reduction 167
5.9.3.2 Recycling 177
5.10 Printing 178
5.10.1 Process Description 178
5.10.1.1 Image Processing 179
5.10.1.2 Proof 179
5.10.1.3 Plate Processing 179

5.10.1.4 Makeready....181
5.10.1.5 Printing....181
5.10.1.6 Finishing....181
5.10.2 Waste Description....181
5.10.3 Pollution Prevention Opportunities....183
5.10.3.1 Source Reduction....183
5.10.3.2 Recycling....186
5.11 Waste Water Treatment....188
5.11.1 Process Description....189
5.11.1.1 Trickling Filters....189
5.11.1.2 Oxidation....189
5.11.1.3 Activated Sludge....190
5.11.1.4 Chlorination and Other Disinfection Techniques....190
5.11.2 Waste Description....191
5.11.3 Pollution Prevention Opportunities....191
5.11.3.1 Source Reduction....191
5.11.3.2 Recycling....191

Chapter 6 Electric Equipment....193
6.1 Motors....193
6.1.1 Idle Running....193
6.1.2 Efficiency at Low Load....193
6.1.3 High-Efficiency Motors....195
6.1.4 Reduce Speed/Variable Drives....197
6.1.4.1 Variable Frequency AC Motors....197
6.1.4.2 Solid State DC Drives....199
6.1.4.3 Mechanical Drives....199
6.1.4.4 Single-Speed Reduction....200
6.1.4.5 Two-Speed Motors....200
6.1.5 Load Reduction....200
6.1.6 High-Starting Torque....200
6.1.7 Rewound Motors....201
6.1.8 Motor Generator Sets....201
6.1.9 Belts....201
6.2 Lighting....202
6.2.1 Lighting Standards....202
6.2.2 Light Meter Audit....205
6.2.3 Methods to Reduce Costs....205
6.2.3.1 Turn off Lights....205
6.2.3.2 Automatic Controllers....206
6.2.3.3 Remove Lamps....206
6.2.3.4 Maintain Lamps....206
6.2.3.5 Lower-Wattage Fluorescent Lamps and Ballasts....207
6.2.3.6 Fluorescent Retrofit Reflectors....208
6.2.3.7 Lamp Relocation....209
6.2.3.8 Lighting System Replacement....210
6.2.4 Summary of Different Lighting Technologies....210
6.2.4.1 Incandescent....211
6.2.4.2 Fluorescent....211
6.2.4.3 High Energy Discharge....211

Chapter 7 Heat....213
7.1 Boilers....213
7.1.1 Boiler Operation and Efficiency....213
7.1.1.1 Boiler Efficiency Tips....214
7.1.1.2 Combustion in Boilers....217

7.1.2 Typical Performance Improvements 220
7.1.2.1 Adjustment of Fuel and Air Ratio 220
7.1.2.2 Elimination of Steam Leaks 221
7.1.2.3 Variable Frequency Drives for Combustion Air Blowers 221
7.1.2.4 Maintenance of Steam Traps 222
7.1.2.5 High Pressure Condensate Return Systems 222
7.2 Heat Recovery Systems 223
7.2.1 General Considerations 223
7.2.2 Types of Heat Recovery Equipment 224
7.2.2.1 Economizers 224
7.2.2.2 Heat Pipes 225
7.2.2.3 Shell and Tube Heat Exchangers 225
7.2.2.4 Regenerative Unit (Heat Wheel) 225
7.2.2.5 Recuperators 225
7.3 Heating Systems 226
7.3.1 Destratification Fans 226
7.3.1.1 Ceiling Fans 226
7.3.1.2 Ducting 227
7.3.2 Electric Heating 227
7.3.2.1 Radiant Heaters 228
7.3.2.3 Types of Radiant Systems 228
7.3.2.4 Applications 228
7.4 Furnaces And Burners 229
7.4.1 Burner Combustion Efficiency 229
7.4.2 Premix Burner Systems 230
7.4.3 Nozzle Mix Burners 230
7.4.4 Furnace Pressure Controls 231
7.4.5 Furnace Efficiency 231
7.4.6 Furnace Covers 232
7.5 Cogeneration 232
7.5.1 The Economics of Cogeneration 232
7.5.2 Cogeneration Cycles 233
7.5.2.1 Cogeneration High-Spot Evaluation 234
7.5.2.2 Estimate of Savings 236
7.8 Thermoenergy Storage Systems 237
7.8.1 High Spot Evaluation 237
7.8.2 Electric Load Analysis 238

Chapter 8 Prime Movers of Energy 241
8.1 Pumps 241
8.1.1 Operation 241
8.1.1.1 Pump Survey 241
8.1.1.2 Energy Conservation Measures 241
8.1.2 Considerations for Installation Design 248
8.2 Fans 248
8.2.1 Inlet Vane Control 250
8.2.2 Reduced Speed 250
8.2.3 Variable Speed 250
8.3 Air Compressors 250
8.3.1 Waste Heat Recovery 251
8.3.2 Operating Pressure Reduction 251
8.3.3 Elimination of Air Leaks 252
8.3.4 Cooling Water Heat Recovery 255
8.3.5 Compressor Controls 255
8.3.6 Outside Air Usage 256
8.3.7 Compressor Replacement 256

8.3.8 Low Pressure Blowers 257
8.3.9 General notes on Air Compressors 257

Chapter 9 Thermal Applications 259
9.1 Cooling Systems 259
9.1.1 Cooling Towers 259
9.1.2 Typical Performance Improvements 263
9.1.3.1 Condenser Water Temperature Adjustments 263
9.1.3.2 Chilled Water Supply Temperature Adjustment 263
9.1.3.3 Variable Speed (or Two-Speed) Motors for Cooling Tower Fans 264
9.1.3.4 Hot Gas Defrost 264
9.2 Absorption Refrigeration 265
9.2.1 Operation 266
9.2.1.1 Capacity 267
9.2.1.2 Operating Problems 267
9.2.1.3 Direct-Fired two-Stage Absorption Refrigeration 268
9.3 Mechanical Refrigeration 268
9.3.1 Mechanical Compression 268
9.3.2 Methods to Reduce Costs 269
9.3.2.1 Use Refrigeration Efficiently 270
9.3.2.2 Reduce the Condensing Temperature (Pressure) 270
9.3.2.3 Raise the Evaporator Temperature (Pressure) 272
9.3.2.4 Operate Multiple Compressors Economically 272
9.3.2.5 Recover Heat 273
9.3.2.6 Reduce Operation of Hot-Gas Bypass 273
9.3.2.7 Optimize Refrigeration Performance 273
9.4 Insulation 274
9.4.1 Insulation of Pipes 274
9.4.1.1 Steam and Hot Water 275
9.4.1.2 Cold Water 275
9.4.2 Insulation of Tanks 275
9.4.2.1 Hot Media 276
9.4.2.2 Cold Media 276
9.4.3 Building Insulation 276
9.4.4.1 Dock Doors 277
9.4.4 Recommended Insulation Standards 277
9.4.5.1 Lowest Cost System 277
9.4.5.2 Economic Factors to be Considered in Basic Insulation Selection 277
9.4.5.3 Finish Factors Influencing Insulation Selection 278
9.4.5 Process Equipment 278
9.4.6.1 Injection Mold Barrels 278

Chapter 10 HVAC 281
10.1 Air Conditioning 281
10.1.1 Equipment 281
10.1.1.1 Fans 281
10.1.1.2 Coils 281
10.1.1.3 Air Washers 282
10.1.1.4 Air Cleaners 282
10.1.1.5 Humidifiers 283
10.1.1.6 Controls 283
10.1.1.7 Distribution System 283
10.1.2 Psychrometry 283
10.1.3 Computation 284
10.1.4 Energy Conservation 284
10.1.4.1 Operate Systems Only When Needed 285

10.1.4.2 Eliminate Overcooling and Overheating 286
10.1.4.3 Eliminate Reheat 288
10.1.4.4 Economizer Cycle 288
10.1.4.5 Minimize Amounts of Makeup and Exhaust Air 291
10.1.4.6 Minimize the Amount of Air Delivered to a Conditioned Space 291
10.1.4.7 Recover Energy 293
10.1.4.8 Maintain Equipment 293
10.2 HVAC Systems 293
10.2.1 Equipment Sizing Practices 294
10.2.1.1 Reducing Capacity by Fan/Pump Slowdown 294
10.2.1.2 Maximize HVAC Savings 295
10.2.2 Design for Human Comfort 295
10.2.2.1 Factors Affecting Comfort 297
10.2.3 General Types of Building Heating and Cooling 302
10.3 Ventilation 305
10.3.1 Losses 306
10.3.1.1 Room Air 306
10.3.1.2 High-Temperature Exhaust 306
10.3.1.3 Air-Water Mixture 307
10.3.2 Balance Air Flows 307
10.3.2.1 Shut off Fans 307
10.3.2.2 Reduce Volume 307
10.3.2.3 Reduce Temperature 308
10.3.2.4 Recover Heat 308
10.3.3 Types of Heat Exchangers 309
10.3.3.1 Rotary Heat Exchanger 309
10.3.3.2 Sealed Heat Pipe Exchanger 309
10.4.5.1 Plate Heat Exchanger 309
10.4.5.2 Coil-Run-Around System 309
10.4.5.3 Hot Oil Recovery System 310

Appendix A Information Resources A-1
EPA Regional Offices A-1
Energy Conservation Resources A-2
Pollution Prevention Publications A-3
Technology Transfer Information Sources A-9
Pollution Prevention Websites A-57

Appendix B Thermodynamic Analysis B-1
Psychrometrics B-1
Properties of Air B-2
Air Conditioning Processes B-6
Heat Loss Calculations B-10
Heat Gain Calculations B-12

Appendix C Energy and Waste Instrumentation for Audits C-1

Appendix D Definitions D-1

Appendix E Energy Conservation Opportunity Case Studies E-1
Case Study #1: Implement Periodic Inspection and Adjustment of Combustion in a Gas Fired Boiler E-3
Case Study #2: Implement Periodic Inspection and Adjustment of Combustion in a Oil Fired Boiler E-5
Case Study #3: Energy Saving From Installation of Ceiling Fans E-7
Case Study #4: Install Infrared Radiant Heaters E-9

Case Study #5: Repair Compressed Air Leaks E-13
Case Study #6: Install a Low Pressure Blower to Reduce Compressed Air Use E-17

Appendix F Pollution Prevention Opportunity Case Studies F-1
Case Study #1: Construction and Demolition Waste Recycling F-3
Case Study #2: Packaging Reuse F-5
Case Study #3: Oil Analysis Program F-7
Case Study #4: Maintenance Fluid Recycling F-9
Case Study #5: Metal Working Fluid Substitution F-11
Case Study #6: Install an Automated Aqueous Cleaner F-13
Case Study #7: Recycling of Cleaner Through Filtration F-15
Case Study #8: Efficient Rinsing Set-up For Chemical Etching F-17
Case Study #9: Waste Reduction in the Chromate Conversion Process F-19
Case Study #10: Plating Process Bath Maintenance F-21
Case Study #11: Closed-Loop Plating Bath Recycling Process F-23
Case Study #12: Water-Borne Paint As a Substitute for Solvent-Based Coatings F-25
Case Study #13: High Velocity Low Pressure (HVLP) Paint System F-27
Case Study #14: Replacing Chemical Stripping with Plastic Media Blasting F-29
Case Study #15: White Water and Fiber Reuse in Pulp and Paper Manufacturing F-31
Case Study #16: Chemical Substitution in Pulp and Paper Manufacturing F-33
Case Study #17: On-site Recycling F-35
Case Study #18: Solvent Reduction in Commercial Printing Industry F-37

List of Exhibits

Exhibit 2.1 Environmental Management Hierarchy 16
Exhibit 2.2 Assessment Procedures 17
Exhibit 2.3 Block Diagram Model 19
Exhibit 2.4 Example Facility Description 27
Exhibit 2.5 Mars Screen Printing Facility Layout 28
Exhibit 2.6 Example Process Description 29
Exhibit 2.7 Example Flow Diagram for the Mars Screen Printing, Screen Making Operation 30
Exhibit 2.8 Example Flow Diagram for the Mars Screen Printing, Printing Operation 30
Exhibit 2.9 Example Flow Diagram for the Mars Screen Printing, Cleaning Operation 31
Exhibit 2.10 Electrical Summary 31
Exhibit 2.11 Natural Gas Summary 32
Exhibit 2.12 Fuel Oil Summary 32
Exhibit 2.13 Summary of Energy Usage 33
Exhibit 2.14 Summary Energy Costs 33
Exhibit 2.15 Electrical Costs 34
Exhibit 2.16 Electricity Usage 34
Exhibit 2.17 Example Raw Material List for Mars Screen Printing 35
Exhibit 2.18 Example Waste Generation Data for Mars Screen Printing 35
Exhibit 2.19 Example Equipment List and Pertinent Information 36
Exhibit 2.20 Energy Conservation and Pollution Prevention Opportunities for Mars Screen Printing 36
Exhibit 2.21 Example Decision Matrix 37

Exhibit 3.1 Relation of Demand (kW) to Energy (kWh) 41
Exhibit 3.2 Sample Natural Gas Bill 42
Exhibit 3.3 Common Units of Measure and Conversions to BTUs (U.S. Dept of Commerce, 1974) 46
Exhibit 3.4 Units of Measure for Various Applications (U.S. Dept of Commerce, 1974) 46
Exhibit 3.5 Typical Technical Evaluation Criteria 48
Exhibit 3.6 TCA Cost Categories 53
Exhibit 3.7 Estimated Annual Cost of Environmentally Preferred Ink at Mars Screen Printing 55
Exhibit 3.8 Annual Cost of Current Ink Formulation at Mars Screen Printing 56
Exhibit 3.9 Estimated Annual Cost of Environmentally Preferred Ink at Mars Screen Printing 56
Exhibit 3.10 NPV Calculation for Mars Screen Printing 58
Exhibit 3.11 IRR Calculations for Mars Screen Printing 59

Exhibit 4.1 Components of Electrical Power 64
Exhibit 4.2 Power Factor Correction 65
Exhibit 4.3 Highest Demands for Hypothetical Billing Period of May 68
Exhibit 4.4 Example Electric Bill 69
Exhibit 4.5 Compendium of Processes Producing Waste 77

Exhibit 5.1 Available Technologies for Alternatives to Chlorinated Solvents for Cleaning and Degreasing 114
Exhibit 5.2 Available Technologies for Cleaning and Degreasing 124
Exhibit 5.3 CEVC Cleaning Cycle 128
Exhibit 5.4 Five-stage Iron or Zinc Phosphating Process 137
Exhibit 5.5 Typical Conversion Coating Process for Aluminum 138
Exhibit 5.6 Simplified Material Balance of a Chemical Etching Process Step 138
Exhibit 5.7 Immersion Rinse System Schematic 140
Exhibit 5.8 Schematic of a Conveyorized Paints and Coatings Operation 141
Exhibit 5.9 Major Metal Plating Wastes and Constituents 146
Exhibit 5.10 Waste Minimization Opportunities Available to the Metal Plating Industry 157
Exhibit 5.11 Waste Minimization/Pollution Prevention Methods and Technologies 148
Exhibit 5.12 Process Flow Diagram for a Typical Commercial Printing Operation 180

Exhibit 5.13 Wastes from Commercial Printing....182
Exhibit 5.14 One and Two Stage Trickling Filter Systems....190

Exhibit 6.1 Motor Efficiency....194
Exhibit 6.2 Typical Efficiency Comparison for 1800 rpm Motors: General Electric....196
Exhibit 6.3 Typical Efficiency Comparison for 1800 rpm Motors: Westinghouse....197
Exhibit 6.4 Fan Drive: Variable Speed vs. Valve Control....198
Exhibit 6.5 Results for a Fan Controlled by Damper....199
Exhibit 6.6 Fan Horsepower with Variable Speed Motor....199
Exhibit 6.7 Dupont Recommended Light Levels for Service Building Interiors....202
Exhibit 6.8 Dupont Recommended Illumination Levels for General Manufacturing....204
Exhibit 6.9 Dupont Recommended Illumination Levels for Outdoor Areas....205
Exhibit 6.10 Alternative Lighting Systems Approximate Initial Lumens per Watt Including Ballast....210

Exhibit 7.1 Optimal Flue Gas Composition....214
Exhibit 7.2 Boiler Efficiency (Natural Gas)....215
Exhibit 7.3 Effect of Scale Thickness in Boilers on Heat Transfer....216
Exhibit 7.4 Effects of Feedwater Preheat on Boiler System Efficiency....216
Exhibit 7.5 Efficiency Loss Due to Blowdown....217
Exhibit 7.6 Ultimate CO_2 Values....218
Exhibit 7.7 Boiler Combustion Mixtures....218
Exhibit 7.8 Combustion Efficiencies....219
Exhibit 7.9 Air/Fuel Ratio Reset: Costs and Benefits....220
Exhibit 7.10 Steam Leak Repair: Costs and Benefits....221
Exhibit 7.11 (ASD) – Variable Frequency Drives: Costs and Benefits....221
Exhibit 7.12 Steam Trap Repair: Costs and Benefits....222
Exhibit 7.13 Condensate Return Systems: Costs and Benefits....223
Exhibit 7.14 Fuel Savings Realized by Preheating Combustion Air....224
Exhibit 7.15 Stratification and Destratification of Air....227
Exhibit 7.16 Infrared Radiant Heater....229
Exhibit 7.17 Percent Excess Air From CO_2 Reading....230
Exhibit 7.18 Cogeneration Cycles....234
Exhibit 7.19 Gas-Turbine Cycle....235
Exhibit 7.20 Steam-Turbine Cycles....236
Exhibit 7.21 Thermal Storage High Spot Evaluation....238

Exhibit 8.1 Typical Centrifugal Pump Characteristics....244
Exhibit 8.2 Centrifugal Pump Curve....245
Exhibit 8.3 Typical Pump and System Curves, Driven by Adjustable Speed Drive....246
Exhibit 8.4 Typical Pump and System Curves for Pump with Throttling Valve....247
Exhibit 8.5 Pump Power Requirements for Throttling and Adjustable Speed Motors....247
Exhibit 8.6 Comparative Energy Usage with Various Methods of Control....248
Exhibit 8.7 Nominal Efficiency of Fans at Normal Operating Conditions....249
Exhibit 8.8 Effect of Volume Control on Fan Horsepower....249
Exhibit 8.9 Compressor Waste Heat Recovery: Costs and Benefits....251
Exhibit 8.10 Pressure Reduction: Costs and Benefits....252
Exhibit 8.11 Fuel and Air Losses Due to Compressed Air Leaks....252
Exhibit 8.12 Leakage Reduction: Costs and Benefits....252
Exhibit 8.13 Waste Water Heat Recovery: Costs and Benefits....255
Exhibit 8.14 Screw Compressor Controls: Costs and Benefits....255
Exhibit 8.15 Outside Air Usage: Costs and Benefits....256
Exhibit 8.16 Optimum Sized Equipment: Costs and Benefits....257
Exhibit 8.17 Reduce Compressed Air Usage: Costs and Benefits....257

Exhibit 9.1 Comparison of F. D. Blower Tower vs. Propeller Tower for 400 Tons....260
Exhibit 9.2 Mechanical Forced-Draft Cooling Tower....260

Exhibit 9.3 Induced Draft Cooling Tower....261
Exhibit 9.4 Free Cooling/Air Preheat....261
Exhibit 9.5 Indirect Free Cooling Loop....262
Exhibit 9.6 Free Cooling (Water Side Economizer) Define Operating Conditions....262
Exhibit 9.7 Condenser Water Supply Temperature Reset: Costs and Benefit....263
Exhibit 9.8 Chilled Water Supply Temperature Reset: Costs and Benefits....263
Exhibit 9.9 Two-Speed Motors on Cooling Tower Fans: Costs and Benefits....264
Exhibit 9.10 Temperature vs. Time of Blower Operation....265
Exhibit 9.11 Evaporator Coils Defrost: Costs and Benefits....265
Exhibit 9.12 Two-Stage Absorption Chiller....266
Exhibit 9.13 Capacity as Function of Temperature of Heat Source and Cooling Water....267
Exhibit 9.14 Cost Comparison of Mechanical and Absorption Refrigeration....268
Exhibit 9.15 Mechanical Compression Refrigeration System....269
Exhibit 9.16 Pressure-Enthalpy Diagram....270
Exhibit 9.17 Partial Load Requirement for Centrifugal Refrigeration Compressors....271
Exhibit 9.18 Recommended Thickness for Pipe and Equipment Insulation....274
Exhibit 9.19 Steam Lines and Hot Water Pipes: Costs and Benefits....275
Exhibit 9.20 Chilled Water Pipes: Costs and Benefits....275
Exhibit 9.21 Hot Tanks: Costs and Benefits....276
Exhibit 9.22 Cold Tanks: Costs and Benefits....276
Exhibit 9.23 Dock Doors: Costs and Benefits....277
Exhibit 9.24 Insulate Equipment: Costs and Benefits....278

Exhibit 10.1 Air Conditioning Equipment....282
Exhibit 10.2 Modified Air Conditioning System Controls....287
Exhibit 10.3 Economizer Cycle (Outdoor Temp. Switchover, Mixing Temp. Control)....289
Exhibit 10.4 Economizer Cycle (Outdoor Temp. Switchover, Chilled H_20 Control)....289
Exhibit 10.5 Economizer Cycle (Enthalpy Switchover, Chilled H_20 Control)....289
Exhibit 10.6 Total Savings....292
Exhibit 10.7 Effect of Volume Control on Horsepower....293
Exhibit 10.8 Energy Use in Buildings....293
Exhibit 10.9 Load vs. Efficiency....294
Exhibit 10.10 Control Valve Characteristics....295
Exhibit 10.11 Heating and Cooling Loads....296
Exhibit 10.12 Comfort Zone Detail....297
Exhibit 10.13 Biological Factors Affecting Comfort....298
Exhibit 10.14 Heat Flux Generated by Various Activities....298
Exhibit 10.15 Clothing Resistance....299
Exhibit 10.16 Garment Insulation Values....300
Exhibit 10.17 Convection Heat Transfer Coefficients....301
Exhibit 10.18 Sprayed Coil Dehumidifier....302
Exhibit 10.19 Evaporative Cooling & Air Washer....302
Exhibit 10.20 Humidity Control Through Cooling Override....303
Exhibit 10.21 Single Zone – All Direct Control from Space Thermostat....303
Exhibit 10.22 Dual Duct Air Handling System....304
Exhibit 10.23 Multizone Air Handling Unit....304
Exhibit 10.24 Hybrid VAV Control System....305

Exhibit E.1 Natural Gas Fuel Savings....E-4
Exhibit E.2 Liquid Petroleum Fuel Savings....E-6
Exhibit E.3 Condition of Pneumatic System at Time of Site Visit....E-13
Exhibit E.4 Cost of Compressed Air Leaks at This Plant....E-14
Exhibit E.5 Summary of Savings....E-14
Exhibit E.6 Implementation Costs....E-15

Exhibit F.1 Cost Analysis for a Demolition Waste Recycling Program....F-3
Exhibit F.2 Monthly Operating Cost Comparison for Polystyrene Packaging Peanuts and Shredded Paper Packaging....F-5
Exhibit F.3 Economic Comparison of Maintenance Schedule versus Oil Analysis Programs....F-7
Exhibit F.4 Annual Operating Cost Comparison for Waste Solvent Disposal and Waste Solvent Recycling....F-9
Exhibit F.5 Waste Volume Reduction by Using the Automated Aqueous Washer....F-13
Exhibit F.6 Annual Operating Cost Comparison for Single Use Rinse and Recycling Rinse....F-15
Exhibit F.7 Drag-out Recovery as a Function of Recycle Rinse Ratio....F-18
Exhibit F.8 Economic Comparison of Wet Sludge Disposal versus Dried Sludge Disposal....F-19
Exhibit F.9 Operating Cost Analysis for Recommended Bath Maintenance Practices....F-21
Exhibit F.10 Economic Evaluation of Evaporator Installation....F-24
Exhibit F.11 Annual Operating Cost Comparison for Water-Borne Paint Application and Solvent Based Paint Application....F-26
Exhibit F.12 Economic Comparison of Air-Assisted Paint Guns versus High Velocity Low Pressure Paint Application....F-27
Exhibit F.13 Operating Cost Comparison for Sodium Hydroxide Paint Removal and Plastic Media Blasting....F-29
Exhibit F.14 Summary of Financial Data for White Water and Fiber Reuse....F-31
Exhibit F.15 Summary of Financial Data for Aqueous/Heavy Metal Conversion....F-33
Exhibit F.16 Economic Comparison of On-Site versus Off-Site Ink Recycling....F-36
Exhibit F.17 Cost Analysis for a 5-Gallon In-Process Solvent Recycling....F-37

Notes

EXECUTIVE SUMMARY

This document is intended to provide guidance to those who are interested in performing industrial assessments at industrial or other commercial facilities. This document is not intended to be an all-encompassing guide to industrial assessments for pollution prevention and energy conservation but a general reference. The U.S. EPA would like to thank Dr. Michael Muller and staff of The Office of Industrial Productivity & Energy Assessment, Rutgers University, and the Department of Energy, Office of Industrial Technology, for their efforts in producing the first version of this document. In addition, the U.S. EPA would like to acknowledge and thank those who have performed the case study assessments.

This guide presents an overview of industrial assessments and the general framework for conducting an assessment. In addition, basic information about waste generating industrial operations and energy consuming equipment is provided. This guide can be used by both facility personnel to conduct in-house assessments of operations and those who are interested in providing industrial assessments to industrial and commercial facilities since the framework for an assessment will be the same for both.

E.1 What Is An Industrial Assessment

An industrial assessment is an in-depth review of existing operations to increase efficiency of the operation through pollution prevention and energy conservation. The industrial assessment is an essential and valuable tool used to:

- define the specific characteristics of a whole facility that consumes energy and generates wastes,
- identify a range of energy conservation and pollution prevention options,
- evaluate the options based on a set of criteria, and
- select the most promising options for implementation.

One should find the industrial assessment instrumental to systematically identifying opportunities to increase energy efficiency and decrease waste generation. Assessments can be divided into three types: energy, waste (hazardous and non-hazardous) or a combination of the two. Energy conservation and pollution prevention are complementary activities. That is, generally actions that conserve energy reduce the quantity of wastes produced by energy-generating processes, and actions that reduce production wastes lower the expenditure of energy for waste handling and treatment. It is a well used and proven approach to identifying cost saving energy conservation and pollution prevention technologies that enhance a facility's performance.

Benefits of Industrial Assessments

- Economics
- Reduced energy consumption
- Reduced waste generation
- Increased operation efficiency
- Reduced liability
- Reduced compliance issues
- Increased worker health and safety
- Improved public relations and public image
- Better monitoring of operation performance

Energy conservation and pollution prevention opportunities provide many benefits. An industrial assessment is intended to increase the efficient use of energy and materials. The process of performing an assessment provides useful information for facility personnel to evaluate a particular operation or the entire facility. Benefits resulting from industrial assessments include economics, reduced liability, reduced energy consumption, increased worker health and safety, improved public relations, and compliance with regulations.

Any facility that wishes to find opportunities to increase the efficiency of their operations should conduct an industrial assessment. Businesses have strong incentives to increase operation efficiency as this increases competitive edge. Operations that are more efficient can operate with lower expenses and decrease their cost per unit production. An industrial assessment is not something that is performed only once and options are implemented. Industrial assessments should be used

Notes

as a tool to periodically examine operation efficiency and re-evaluate current opportunities. As new technologies become available, an opportunity that was not economically or perhaps technically feasible when the last industrial assessment was performed can become a viable opportunity for a facility.

Pollution Prevention means "source reduction" as defined under the Pollution Prevention Act, and other practices that reduce or eliminate the creation of pollutants through:

- increased efficiency in the use of raw materials, energy, water, or other resources, or
- protection of natural resources by conservation.

A pollution prevention program provides the mechanism to a facility for continuous self-evaluation and improvement. Assessments are key components of a facility's pollution prevention program. A pollution prevention program provides the framework for a facility to develop goals, establish a working group, provide reports on energy usage and waste generation, and mechanisms to track results of implemented projects.

The most important element of a pollution prevention program is management support. Top management must demonstrate support for the program because employees who believe that the program is not supported by management get the attitude of "They don't care, why shoul
and should be demonstrated through several mechanisms:

- Circulating a written policy
- Establishing goals for reducing waste generation and energy consumption,
- Establishing a working group,
- Providing training on conservation techniques, and
- Publicizing and rewarding successes.

After a facility has established its goals and objectives for its pollution prevention program, it is ready to conduct industrial assessments.

E.2 Conducting an Industrial Assessment

The assessment process begins with the recognition of the need for pollution prevention and energy conservation. An industrial assessment consists of four general phases:

1. Planning and Organization
2. Assessment Phase
3. Feasibility Analysis Phase, and
4. Implementation

This document will focus on phases 1-3 and will briefly discuss phase 4.

The first step in an assessment is to establish the assessment team. The team should be composed of personnel from many areas of the facility. Core team members will include those that are involved with the operation or process, both supervisors and staff, as well as energy management and environmental staff. Other areas that may be included are health and safety, facility or civil engineering, quality control, accounting and finance, purchasing and contracting, and legal.

Once the assessment team is established, the team will need to determine:

- **What** processes will be assessed.
- **Who** will be involved with the assessment.
- **When** will the assessment take place.
- **How** will the team approach the assessment.

Notes

E.2.1 Planning and Organization

The planning and organization of an industrial assessment is important to obtain the desired results. The assessment team should decide on a data collection format for the assessment. The team may use standard worksheets provided in EPA's Facility Pollution Prevention Guide or may develop their own assessment worksheets, questionnaires, or checklists. The team should prepare an assessment agenda and schedule the assessment in advance to coincide with a particular operation of interest

E.2.2 Assessment Phase

The second phase is the assessment phase. This phase can be broken down into two parts: the pre-assessment and the actual assessment.

E.2.2.1 Pre-Assessment

Prior to the assessment it is a good idea to collect information, allowing the assessment team to review and prepare additional questions. Information that should be collected includes: a facility description, a process description, a process flow diagram, major energy consuming equipment, raw material information, and energy and waste data collection. The team should collect information for a 12-month period and all information should be for the same 12-month period. The energy information should be converted to a standard unit of measure such as the British Thermal Unit (BTU) and graphed to view energy usage trends. Waste data can be summarized in a table format for review and reference. Collection of this data prior to the assessment will also give the assessment team an idea of where its attention should be focused during the actual assessment.

E.2.2.2 Assessment

During the actual assessment, the team should begin with a review of operations and data collected prior to the assessment with persons who work in the area on a day-to-day basis. After the team has discussed the operations, the team should take a walk-through the facility to observe actual operations. During the walk-through team members should talk with personnel to confirm operational procedures and information collected prior to the assessment. After the walk-through, the team members should brain storm ideas for energy conservation and pollution prevention. This is the point where the team will generate a list of ideas without regard to cost or feasibility. Once the list of ideas has been generated, the team can collect information that it needs to complete a feasibility analysis.

E.2.3 Feasibility Analysis Phase

The third phase of the assessment is the feasibility analysis. This portion of the assessment is usually completed over several days after the assessment and will include both a technical feasibility analysis and an economic feasibility analysis.

The feasibility analysis should begin with a prioritization of the identified opportunities. Because of time and resource constraints many facilities will have to choose among opportunities for implementation. The team can develop a relative ranking of opportunities using a tool know as the decision matrix. The decision matrix tool can be used to rank the identified opportunities using a list of critical factors that are important to the facility allowing an "apples-to-apples" comparison of the options.

The feasibility analysis should be documented for presentation to other facility personnel or to management. This documentation should include a clear description of current operations and practices, a description of the opportunity, the benefits of that would result from implementation of the opportunity, as well as a technical and economic evaluation of the opportunity. The detail of the technical and economic evaluations will vary depending on facility requirements and the complexity of the opportunity.

E.2.3.1 Technical Feasibility

The technical feasibility analysis can include:

- Calculation of energy consumption and waste generation reductions,
- Determination of how much labor will be involved with the changes in operations or equipment,

Notes

- Evaluation of space constraints,
- Evaluation of safety and health aspects for employees,
- Compatibility with current operations and materials, and
- Changes in annual operating and maintenance costs.

There are many other factors that can be included in a technical evaluation. All of the factors listed above may not apply to every opportunity. The team should determine what criteria are applicable to a specific opportunity based on the complexity and applicability of implementation and impact on operations.

E.2.3.2 Economic Feasibility

An economic feasibility analysis is a process in which financial costs, revenues, and savings are evaluated for a particular project. This analysis is necessary to evaluate the economic advantages of competing projects and is used to determine how to allocate limited resources. Three methods of comparison are currently is widespread use: Payback Period, Net Present Value, and Internal Rate of Return. The method of economic evaluation is often determined by internal company requirements. In addition, Life Cycle Costing (LCC) and Total Cost Accounting (TCA) tools are used to establish economic criteria to justify energy conservation and pollution prevention. TCA is used to describe internal costs and savings, including environmental criteria. LCC includes all internal costs plus external costs incurred throughout the entire life cycle of a product, process, or activity.

E.2.4 Implementation

Management support is the most important element in successfully implementing energy conservation and pollution opportunities. Actions taken to implement energy conservation and pollution prevention projects vary greatly from project to project and company to company. One facility may decide to use in-house expertise to implement projects while another may find it beneficial to contract the work to an outside organization. After successful implementation of the project, it is beneficial to track and advertise the resulting cost savings and impacts to give feedback to facility personnel. This allows personnel to see the results of changes in procedures or installation of new equipment and to participate in the energy conservation and pollution prevention program.

E.3 Sources of Energy and Pollution

Sources of energy and pollution come in a great variety. Energy is generated from many sources including:

- Nuclear,
- Coal-fired electric generation plants,
- Fossil Fuels,
- Solar,
- Hydroelectric,
- Wind,
- Solid waste incinerators,
- Geothermal, and
- Biomass fuels including wood, peat, and wood charcoal.

These sources are used to generate energy mainly in the form of electricity, because it is more easily transmitted over long distances and can be used for more tasks. These sources are also used to generate steam and compressed air for use in industrial operations.

Energy generation, as well as many industrial operations, produce pollution. Energy generation operations impact the environment either through air emissions from the burning of fossil fuels, wastes from the maintenance of equipment and other operations, flooding of areas by hydroelectric dams, and mining or drilling of fossil fuels. Industrial operations also impact the environment in a similar manner.

Over the past three decades, the generation of wastes that are released to the environment through any media has become more stringently regulated. The regulations that have been enacted require much record keeping, documenting a facility's status for permitting discharges to the air, and water, and for

Notes

disposal. Regulations such as the Clean Air Act (CAA) and the National Pollutant Discharge Elimination System (NPDES) require facilities to apply for and obtain permits to discharge pollutants from their operations. The limits placed on a facility as a result of their discharge permits may impact a facility's production capabilities and the types of equipment that will be required to treat and monitor discharges.

E.4 Industrial Operations

There are many common applications that are applied in a variety of ways through out industry. Pollution prevention opportunities exist for a wide variety of industrial operations. Even though these operations are applied in a variety of ways there are many common opportunities for pollution prevention. The following twelve areas have widespread application in today's industrial operations.

- Office Operations
- Materials Management/ Housekeeping
- Facility Maintenance
- Metal Working
- Cleaning & Degreasing
- Chemical Etching
- Plating Operations
- Paint Application
- Paint Removal
- Paper and Pulp Manufacturing
- Commercial Printing
- Waste Water Treatment

These operations generate similar types of wastes without regard to the specific industry. As such, there are many common opportunities for pollution prevention that can be applied to many industrial operations. There are many sector guides that focus on these areas available from the U.S. EPA (see Appendix A of this document).

For example, every facility has some type of office operations to manage the purchase of materials, personnel, and other administrative tasks. Opportunities that can be implemented in any office include:

- Reducing lighting levels in certain areas,
- Using energy efficient bulbs and fixtures,
- Retrofitting plumbing with water saving devices
- Using electronic documents and mail, and
- Making double-sided copies.

While these opportunities will be common to many industries there will always be opportunities that are specific to a particular facility and it's operations. The assessment team should explore other opportunities that fit a facility's unique needs. This chapter of the document gives a description of each operation area, the types of wastes generated from each operation, and potential pollution prevention opportunities.

E.5 Energy Consuming Equipment

Industrial operations are very energy intensive. Equipment can be combined into a multitude of applications. There are common types of equipment used across industries such as boilers, air compressors, and lighting. There are many energy conservation opportunities that can be implemented for these types of equipment independent of application. Following are brief descriptions of common types of equipment used in industry and applicable energy conservation opportunities. Several energy conservation case studies are given in the appendices of this document.

E.5.1 Electric Equipment

Motors represent the largest single use of electricity in most facilities. The function of an electric motor is to convert electrical energy into mechanical energy. Motors are designed to perform this function

Notes

efficiently; the opportunity for energy savings with motors rests primarily in selection and use. The most direct power savings can be obtained by shutting off idling motors, eliminating no-load losses.

Often motors have a greater rating than required, operating at partial load. Reasons for oversized motors include:

- Personnel may not know the actual load; and to be conservative, select a motor larger than necessary.
- The designer or supplier wants to ensure that the unit will have ample power.
- The correct motor rating is not available when a replacement is needed.

Newer technologies have made motors more efficient and allow flexibility in motor loads such as reduce speed/variable drives and variable frequency AC motors.

Many lighting systems that represented good practice in the past are inefficient in view of today's higher electrical costs. A lighting conservation program not only saves energy but is a highly visible indication of management's interest in conserving energy in general. The importance of lighting conservation, therefore, should be considered not only for its dollar savings but also for its psychological effect on the facility's entire conservation program. Opportunities for conservation include:

- Using task specific lighting levels,
- Turning off unneeded lighting,
- Using lighting specifically designed for high ceiling area, and
- Using energy efficient lamps.

E.5.2 Heat

Boilers are common throughout industry to provide steam for applications as well as heat. A boiler system is comprised of four main parts: a boiler, a steam distribution system, steam traps and a condensate return system. There are several factors that can impact a boiler's efficiency. These include adjustment of air/fuel ratio for fuel combustion, make-up water pre-heat, frequency and amount of blowdown to clean the system of excess solids, percentage of condensate return, and maintenance of the system for leaks and proper operation. Many opportunities for increasing efficiency can be realized through simple maintenance of the system through cleaning, repair of leaks, and periodic adjustment of the air/fuel ratio for combustion.

Heating systems are an integral part of industry today. They are used for process heating, drying and comfort/space heating. The main purpose of industrial space heating is to provide a comfortable work environment for its employees. Destratification fans are used to push warm air that has risen to the ceiling back down to personnel level. This allows the air to mix and reduces the heating requirements for the facility. Stratification is a result of an increasing air temperature gradient between the floor and the ceiling in an enclosed area. Destratification fans can also be used to increase air circulation and cooling during the summer months.

Electric heating equipment is often in expensive and convenient to install. While electrical heating is efficient, the cost of electricity is significantly higher than other sources of energy such as steam or natural gas. Opportunities for increased energy efficiency can be realized by applying the correct type of heating for the application. For example, radiant heating systems are ideal for comfort heating since the infrared radiation elevates body temperature without heating the air through which it travels.

Furnaces are used to generate heat for application directly to a product for tempering, curing coatings, or drying. Furnaces can use electricity or a fossil fuel to generate heat. Opportunities for conservation in furnace operations include adjustment of combustion efficiency, installation of better insulation, improved product cycling, preheating of combustion air, and installation of furnace covers.

Cogeneration is the simultaneous production of electric power and use of thermal energy from a common fuel source. Interest in cogeneration derives from its inherent thermodynamic efficiency. Fossil fuel-fired central stations convert only about one-third of their energy input to electricity and reject two-thirds

Notes

in the form of thermal discharges to the atmosphere. Industrial plants with cogeneration facilities can use the rejected steam in their plant process and thereby achieve a thermal efficiency as high as 80 percent.

Thermoenergy storage systems are used to take advantage of lower cost electrical rates with nighttime operation to provide daytime thermal needs. There must be a significant difference between night and daytime electrical costs, and the daytime refrigeration load must result in high daytime costs in order for this system to be economically feasible.

E.5.3 Prime Movers of Energy

Pumps are widely used for the transfer of liquids from one place to another. Pumps are usually driven by electrical motors but can also be driven by compressed air or hydraulics. There are many types of pumps in use in industry and will vary depending on the application. A few types include:

- Centrifugal pumps used for transfer of large volumes;
- Metering pumps used for precise delivery of liquids to a point of application and ensuring the constant discharge regardless of back-pressure in the lines; and
- Progressive cavity pumps or peristaltic pumps used for delivery of very viscous materials.

Opportunities for energy savings in pump operation are overlooked because pump inefficiency is not readily apparent. These measures can improve pump efficiency:

- Shut down of unnecessary pumps,
- Restore internal clearances if performance has changed significantly,
- Trim or change impellers if head is larger than necessary,
- Control by throttle instead of running wide open or bypassing the flow,
- Replace oversized pumps,
- Use multiple pumps instead of one large pump, and
- Use a small booster pump.

Fans provide the necessary energy input to pump air from one location to another while they overcome the resistance created by equipment and the duct distribution system. Factors that can reduce fan efficiency are: excessive static-pressure losses through poor duct configuration or plugging, duct leakage, improperly installed inlet cone causing excessive air recirculation, oversized fan, and buildup of negative pressure. Reductions in exhaust airflows are usually obtained by adjustment of dampers in the duct. More efficient methods of volume control that can be used are to install inlet damper control, reduce the speed of the fan, and provide variable speed control for the fan.

Air compressors are often large consumers of electricity. There are two types of air compressors: reciprocating and screw compressors. Reciprocating compressors operate in a manner similar to that of an automobile engine, using a piston to compress the air. Screw compressors work by entraining the air between two rotating augers. The space between the augers becomes smaller as the air moves toward the outlet, thereby compressing the air. Screw type compressors, especially older models, use more energy than reciprocating compressors. This is especially true if the compressor is over sized because the screw compressor continues to rotate, whereas a reciprocating compressor requires no power during the unloaded state. There are many opportunities to reduce the amount of energy used by air compressors including:

- Repairing air leaks;
- Reducing the operating pressure;
- Recovering heat from compressor exhaust or cooling water;
- Using outside air; and
- Installing low-pressure blowers where applicable.

Notes

E.5.4 Thermal Applications

The most common types of cooling towers dissipate heat by evaporation of water that is trickling from different levels of the tower. Cooling towers conserve water, prevent discharge of heated water into natural streams and avoid treating large amounts of make-up water. Opportunities for energy reduction in cooling tower operations include adjustment of condenser water temperature, adjustment of chilled water supply temperature, installation of variable speed motors for cooling tower fans, and use of hot gas defrost for air cooler coils.

Absorption and mechanical chillers are used to produce chilled liquid for air conditioning and industrial refrigeration processes. These chillers are usually powered by low-pressure steam or hot water, which can be supplied by the plant boiler or by waste heat from a process. When prime energy is needed, mechanical refrigeration is usually preferable. Air leakage can be a serious operating problem for absorption chillers. Every effort must be made to keep the system airtight, as even very small leaks can cause problems and are difficult to detect. Air entering the machine causes the lithium bromide solution to become highly corrosive to metals, to crystallize, and causes the chilled water temperature to increase.

For mechanical chillers, greater energy efficiency can be achieved through the following steps:

1. Use refrigeration efficiently.
2. Operate at the lowest possible condenser temperature/pressure.
3. Operate at the highest possible evaporator temperature/pressure.
4. Operate multiple compressors economically.
5. Recover heat rejected in the condenser.
6. Use a hot gas bypass only when necessary.

Insulation is an important component in thermal applications to increase the efficient use of conditioned fluids and gases. Proper insulation allows the conditioned fluid or gas to retain its temperature or pressure longer and reduce losses in transportation to the point of use. For example, insulation of steam and hot water pipes reduces the heat loss prior to its intended use. Insulation is also an important consideration for other items such as heated tanks, refrigeration units, and general building insulation.

E.5.5 HVAC

Employee comfort as well as a healthful working environment is an important consideration for facility managers. A controlled working environment is also important for equipment or processes that are sensitive to temperature and humidity. Air conditioning is the process of treating air to control its temperature, humidity, cleanliness, and distribution to meet the given requirements. The basic components include a fan to move air; coils to heat an/or cool the air; filters to clean the air; humidifiers to add moisture; controls to maintain the specified conditions automatically; and a distribution system. Potential energy conservation can be realized from air conditioning operations by operating the system only when needed; eliminating over cooling and over heating;, eliminating reheat; minimizing amounts of makeup and exhaust air; minimizing the amount of air delivered to conditioned spaces; recovering energy, and maintaining equipment.

HVAC systems are typically used for conditioning of space for human comfort. Employee comfort has a great influence on productivity. However, all the comfort should be provided at the minimum expense. Factors that should be considered when controlling the HVAC settings include activities to be performed within the space and the types of clothing typically worn. There are several types of HVAC systems available today. The assessment team should base any recommended opportunities on the type of system installed at the facility.

Many operations require ventilation to control the level of dust, gases, fumes, or vapors. Excess ventilation for this purpose can significantly add to the heating and/or cooling load. Areas that require significant amounts of ventilation are not always cooled but will in most cases be heated. A common problem during the heating season is negative building pressure resulting from attempting to exhaust more air

Notes

than can be supplied. A facility can minimize the impact of ventilation during winter months by balancing airflow and recovering heat for reuse.

E.6 References and Resources

This guide is intended to be a starting point for those interested in increasing a facility's efficient use of materials and energy. References used in compilation of this document are listed for more in-depth information. Industry specific guides available from the U.S. EPA and other sources are also listed.

There are many agencies and organizations that are available to provide assistance to industrial and commercial facilities in the areas of energy conservation and pollution prevention. The agencies and organizations are presented by type (i.e., Federal, state, university, or non-profit). Information for web sites and email addresses are given when available.

Notes

THIS PAGE INTENTIONALLY LEFT BLANK

CHAPTER 1. INTRODUCTION

Notes

This document is intended to provide guidance to those who are interested in performing industrial assessments at industrial or commercial facilities. This document is not intended to be an all-encompassing guide to industrial assessments but a general reference for performing industrial assessments. This document was not intended to re-invent the wheel and therefore is a compilation of information gathered from various sources. The U.S. EPA would like to acknowledge and thank those who have performed the case study assessments. In addition, the U.S. EPA would like to thank Dr. Michael Muller and staff of The Office of Industrial Productivity & Energy Assessment, Rutgers University, for their efforts in producing the first version of this document.

1.1 Document Organization

This guide is organized in four basic sections: Basic Concepts, Specific Waste Generation Information, and Specific Energy Consumption Information, and References and Case Studies. Basic Concepts, Chapters 1-4, is comprised of assessment methodology, fundamentals of an assessment, and evaluation of pollution prevention and energy conservation opportunities. Specific Waste Generation Information, Chapter 5, will cover industrial operations, waste generated from each operation, and pollution prevention opportunities. Specific Energy Consumption Information, Chapters 6-10, covers different types of energy consuming equipment including: electrical equipment, heat generating equipment like boilers and furnaces, prime movers of energy, thermal applications, and HVAC. References and Case Studies, Appendices A-F, include materials that would be used again and again even after the basic concepts have been mastered such as references, sources of information, and pollution prevention and energy conservation case studies.

Document Organization

Basic Concepts - Chapters 1-4
- Introduction
- Assessment Fundamentals
- Evaluation of Pollution Prevention and Energy Conservation Opportunities
- Sources of Energy and Pollution Waste Generation - Chapter 5
- Industrial Operations
- Waste Generation
- Pollution Prevention Opportunities

Energy Consumption - Chapters 6-10
- Electric Equipment
- Heat
- Prime Movers of Energy
- Thermal Applications
- HVAC

Appendices & References
- Sources of Information
- Energy Calculations
- Equipment
- Definitions
- Energy Conservation Case Studies
- Pollution Prevention Case Studies

1.2 What Is An Industrial Assessment

An industrial assessment is an in-depth review of existing operations to increase efficiency of the operation through pollution prevention and energy conservation. The industrial assessment is an essential and valuable tool used to: (1) define the specific characteristics of a whole facility or operation that consumes energy and generates wastes, (2) identify a range of energy conservation and pollution prevention options, (3) evaluate the options based on a set of criteria, and (4) select the most promising options for implementation. An industrial assessment is also an integral component of a facility's Pollution Prevention Program as described below.

Facilities should find the industrial assessment instrumental to systematically identifying opportunities to increase energy efficiency and decrease waste generation. It is a well used and proven approach to identifying cost saving energy conservation and pollution prevention technologies that enhance a facility's performance.

1.3 Benefits of An Industrial Assessment

Energy conservation and pollution prevention opportunities provide many benefits. An industrial assessment is intended to increase the efficient use of energy and materials. The process of performing an

Notes

Benefits of Industrial Assessments

- Economics
- Reduced energy consumption
- Reduced waste generation
- Increase operation efficiency
- Reduced liability
- Reduced compliance issues
- Increased worker health and safety
- Improved public relations and public image
- Better monitoring of operation performance

assessment provides useful information for facility personnel to evaluate a particular operation or the entire facility. Benefits resulting from industrial assessments include economics and compliance with regulations.

One of the biggest motivators for implementing either energy conservation or pollution prevention measures is economics. While economics should not be the only factor considered when evaluating an opportunity for pollution prevention or energy conservation, it is by far one of the most influential factors for getting an opportunity implemented. Economic evaluations of opportunities should incorporate costs for labor, energy (electricity, natural gas, fuel oil, etc.), waste disposal, shipping and transportation. There will be other intangible factors that a cost cannot be applied to such as improved worker health and safety, improved public relations, and reduced liability for waste disposal. Additional economic benefits include increased operation efficiency and better monitoring of operation performance. While estimates of benefits resulting from these factors can be made, a facility should always measure the actual savings or cost versus the estimate. Economic evaluation of pollution prevention and energy conservation opportunities will be discussed in greater detail in Chapter 3.

Reduced energy consumption presents direct economic benefit to a facility through reduced energy costs for electricity, natural gas, fuel oil, etc. This economic benefit can be realized as a result of installing new energy efficient equipment, scheduling of facility operations to reduce charges from utility companies, and best management practices. Energy conservation does not always provide a direct benefit to the facility in terms of reduction of pollution but does provide indirect reductions to pollution generation at the energy generation facility. Pollution prevention opportunities also provide direct economic benefit to a facility through reduced waste generation, reduced labor to manage wastes, raw material purchases, and other unquantifiable benefits such as reduced liability for waste disposal and improved worker health and safety. In addition, a facility can improve compliance with OSHA and environmental regulations through best management practices as well as improve public relations. With increased public awareness of environmental issues, improved public relations and public image are increasingly appealing benefits.

1.4 Who Should Participate In An Industrial Assessment

Any facility that wishes to find opportunities to increase the efficiency of their operation should participate in an industrial assessment. Businesses have strong incentives to increase operation efficiency as this increases their competitive edge. Operations that are more efficient can operate with lower expenses and decrease their cost per unit production. An industrial assessment is not something that is performed only once and projects are implemented. Industrial assessments should be used as a tool to periodically examine operation efficiency and re-evaluate current opportunities. As new technologies become available, an opportunity that was not economically or perhaps technically feasible when the last industrial assessment was performed can become a viable opportunity for a facility.

The industrial assessment can be performed either by facility personnel or can be done by an industrial assessment expert. There are many universities and private firms that provide these services to industrial facilities. For a list of additional resources available see Appendix A.

1.5 Establishing a Pollution Prevention Program

An effective pollution prevention program is the key to reducing environmental impacts from an industrial facility. An industrial assessment alone cannot provide continued improvements to a facility with out planning and organization. A lack of planning and organization can lead to a low performance and higher cost to implement pollution prevention and energy conservation opportunities. Facilities can avoid this by

establishing a pollution prevention program. A program is simply an organized, comprehensive, and continual effort to systematically reduce or eliminate pollution and wastes.

Notes

There are four basic elements of a pollution prevention program.

1. Management Support
2. Characterization of Energy Usage and Waste Generation
3. Conducting Industrial Assessments
4. Review of Effectiveness

These elements provide the framework to obtaining effective results from industrial assessment efforts.

1.5.1 Management Support

A successful pollution prevention program begins with management support. Visible management support is important to ensure that employees understand that pollution prevention is a priority. This commitment can be demonstrated using several techniques including:

1. Written company policy,
2. Setting goals for reducing energy consumption and waste reductions,
3. Designating program coordinators or a working group,
4. Publicizing and rewarding successes, and
5. Providing employee training.

Goals should be developed to identify specific reductions and accomplishments for a pollution prevention program. By setting goals, the nature of the pollution prevention program will be defined and efforts will be directed toward a quantifiable objective. Once the goals are publicized, employees will know what the program is trying to accomplish and why they should participate. All published goals should set time limits, numeric goals, measurement units, and a mechanism to track progress. Setting pollution prevention goals, and tracking progress towards that goal, helps build a sense of accomplishment and reaffirms the reasons for implementing pollution prevention programs to facility personnel. In addition, setting goals will also help determine which pollution prevention projects should get priority and funding.

Program coordinators or a working group should be established to implement the pollution prevention program. Members should include representatives from each major affected group and include supervisors and shop level employees. The staff is not necessarily static; different personnel may be needed as the pollution prevention program progresses from the planning stages to implementation. Staff responsible for implementing pollution prevention options should be involved in the planning process.

The coordinators will be responsible for developing the pollution prevention plan, encouraging staff participation in the planning and implementation of the program, monitoring the program as it develops, acting as advocates for the pollution prevention program, and publicizing the program.

Group members can promote the pollution prevention program throughout the facility and generate moral support. They can educate personnel about what is being done and why. They can solicit ideas from the shop floor and suggest them at the next meeting. A pollution prevention newsletter giving periodic updates on the progress of certain projects can be started with group members contributing articles. The group can create incentives for employee participation or give awards for pollution prevention suggestions from employees.

1.5.2 Characterize Energy Usage and Waste Generation

In order to determine how well the facility's program and projects are being implemented, the facility should develop mechanisms to track measures of performance. These measures of performance should include the quantity and cost of utilities and waste generated as well as hazardous constituents. Measures of performance can be used to determine the true costs associated with energy and waste management including regulatory oversight compliance, paperwork, materials in waste stream, and loss of production potential.

Notes

The data elements identified and discussed below are some examples of information that could be regularly compiled (if applicable) and reviewed by the environmental office or an appointed environmental head. For each of these components, large uses should be identified and improved upon.

- *Toxic Release Inventory (TRI) Releases* – track the usage of TRI chemicals to provide data for identifying reduction opportunities. Material substitution and process changes can reduce TRI chemical usage.
- *Hazardous Waste Generation* – track and record hazardous waste generation for each group/process within the facility. The group's progress toward hazardous waste reduction should be reported.
- *Non-Hazardous Solid Waste* – track and record waste generation for each group within the facility. The group's progress towards reducing the amount of municipal solid waste generated should be reported.
- *Alternative-Fueled Vehicles* – document and promote use of alternatively fueled vehicles.
- *Pesticide Management* – track pesticide management practices. The information can be utilized to produce a baseline for a goal of pesticide reduction.
- *Ozone Depleting Chemicals* – track the purchase and usage of ozone depleting chemicals. A formal reduction plan can be formulated to eliminate the use of all ozone depleting substances.
- *EPA 17 Industrial Toxics* – tracking can identifying high volume uses of EPA 17 industrial toxics, and pollution prevention opportunity assessments can be conducted specifically targeting those products/chemicals.
- *Affirmative Procurement* – track procurement of materials, including the amounts of recycled content products purchased by the facility. To do this, office personnel can utilize the EPA Affirmative Procurement Guideline Items to identify particular products.
- *Energy Conservation* – track energy consumption sources (e.g., #2 and #6 fuel oil, natural gas, propane, electricity). This information should be utilized to track progress toward pollution prevention goals.
- *Water Conservation* – track water usage on a monthly basis to gauge progress toward pollution prevention goals. Water use data should be distributed to all involved groups.

1.5.3 Conduct Industrial Assessments

An industrial assessment is the tool used to systemically identify opportunities for energy conservation and pollution prevention. Facilities should periodically conduct assessments to identify opportunities for implementation not just one time. New technologies are being developed every day and becoming more economical to implement. Opportunities that were once not technically or economically feasible for implementation may become feasible two or three years later. Industrial assessments should be used as a tool to accomplish the pollution prevention goals.

1.5.4 Review Program Effectiveness

Periodic reviews of pollution prevention program goals and objectives as well as results from implemented projects are vital to obtaining continuous process efficiency. Managers as well as program coordinators should review goals to determine if goals and objectives are being reached. Results from implemented projects will help determine if the program is progressing toward the desired goals and identify areas for improvement.

Many guidance documents on establishing a pollution prevention program are available from the U.S. EPA, and many state environmental offices, as well as other organizations. This document provides only a brief overview of pollution prevention programs.

REFERENCES

1. *Federal Facility Pollution Prevention: Tools for Compliance*; 1994, U.S. Environmental Protection Agency. Office of Research and Development, Cincinnati, OH 45268. EPA/600/R-94/154.

Notes

CHAPTER 2. ENERGY AND POLLUTION PREVENTION ASSESSMENTS

The assessment process begins with the recognition for the need for pollution prevention and energy conservation. Facility personnel have many pieces of information available to them to evaluate operations. The assessment is a tool to systematically evaluate an operation using available information. This chapter will discuss general pollution prevention and energy conservation concepts, assessment methodology, as well as basic concepts and organization in conducting an industrial assessment.

2.1 Pollution Prevention and Energy Conservation

Pollution Prevention means "source reduction" as defined under the Pollution Prevention Act, and other practices that reduce or eliminate the creation of pollutants. It involves the judicious use of resources through source reduction, energy efficiency, reuse of input materials during production, and reduced water consumption. Pollution prevention does not include off-site recycling or waste treatment such as detoxification, incineration, decomposition, stabilization, and solidification or encapsulation, concentrating hazardous or toxic constituents to reduce volume, diluting constituents to reduce hazard or toxicity, or transferring hazardous or toxic constituents from one environmental medium to another.

Energy conservation and pollution prevention are complementary activities. That is, actions that conserve energy reduce the quantity of wastes produced by energy-generating processes, and actions that reduce production wastes lower the expenditure of energy for waste handling and treatment.

2.1.1 Hierarchy

Pollution Prevention Act of 1990 reinforces the U.S. EPA's Environmental Management Hierarchy as illustrated in Exhibit 2.1. The highest priorities are assigned to preventing pollution through source reduction and reuse, or closed-loop recycling. Source reduction is any practice which

- Reduces the amount of any hazardous substance, pollutant, or contaminant entering any waste stream or otherwise released into the environment (including fugitive emissions) prior to recycling, treatment, or disposal; and
- Reduces the hazards to public health and the environment associated with the release of such substances, pollutants, or contaminants. The term includes equipment or technology modifications, process or procedure modifications, reformulation or redesign or products, substitutions of raw materials, and improvements in housekeeping, maintenance, training, or inventory control.

Preventing or recycling at the source eliminates the need for off-site recycling or treatment and disposal. Elimination of pollutants at the source is typically less expensive than collecting, treating, and disposing of wastes. It also presents less risk to workers, the community, and the environment.

Also included in source reduction is energy conservation. Implementation of energy conservation reduces pollutants generated as a result of energy use. For example, a facility has a boiler to produce steam for operations. The steam pipes running throughout the facility are not insulated, therefore, more natural gas is needed to keep the steam at the needed temperature. Insulation of the steam pipes would help to keep the steam at the desired temperature for longer periods of time. This reduces the quantity of natural gas used to generate steam (energy conservation) and reduces the air pollutants generated from the burning of the natural gas in the boiler.

Recycling is also pollution prevention because this employs the reuse or reclamation of materials at the facility for reuse in the process. An example of this would be reuse of excess plastic from trimming operations in molding and extruding process. The excess plastic can be ground into chips and added back into the raw materials for the molding and extruding process. Another example would be the reclamation of solvents using a solvent distillation operation and reusing the solvents in the manufacturing operation.

Notes

Exhibit 2.1: Environmental Management Hierarchy

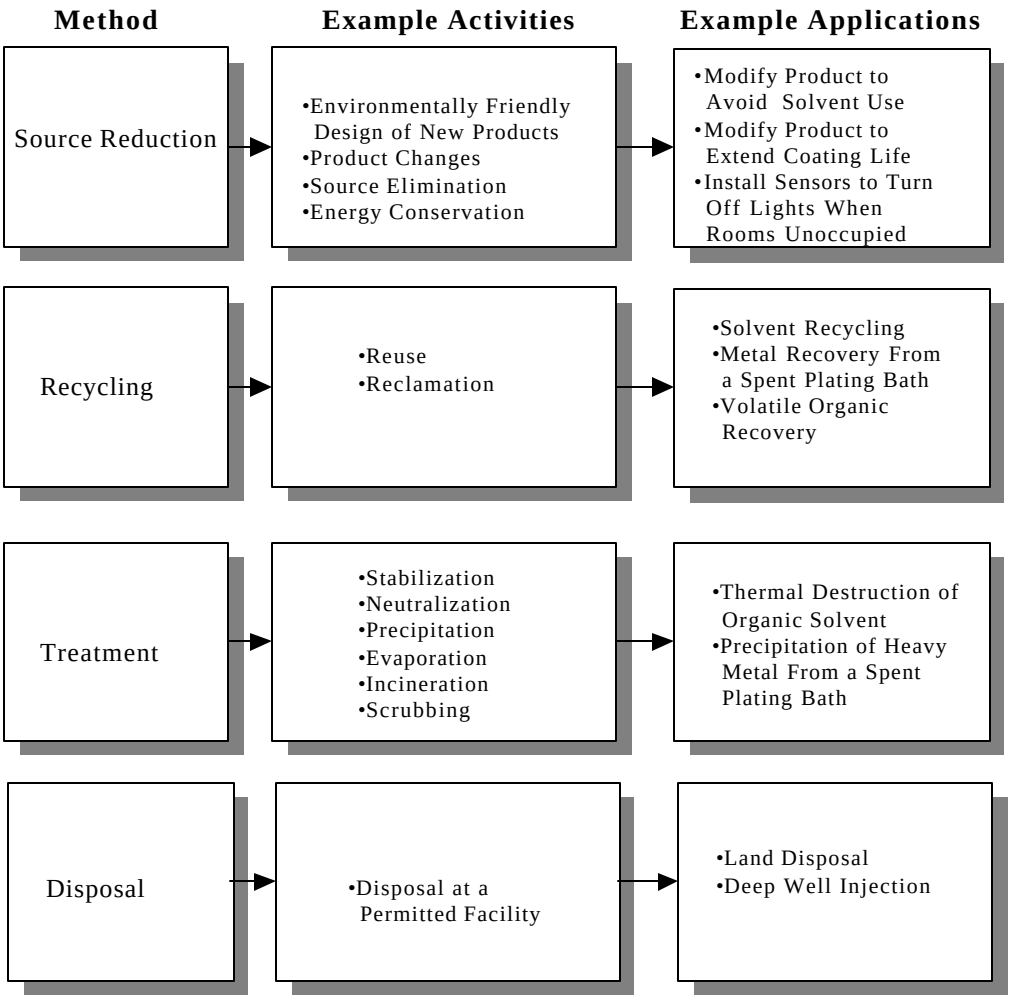

2.2 Assessment Methodology

An industrial assessment consists of four general phases:

1. Planning and Organization
2. Assessment Phase
3. Feasibility Analysis Phase
4. Implementation

This document will focus on phases 1-3 and will briefly discuss phase 4.

The procedures discussed in Phases 1-3 tend to be common to many types of facilities. Implementation procedures for projects will vary from facility to facility and as such will not be covered in depth here. Before an assessment can begin one must determine the type of assessment to be performed.

Notes

Industrial assessments are an in-depth review of existing operations to increase efficiency of the operation through pollution prevention and energy conservation. Assessments can be divided into three types: energy, waste (hazardous and non-hazardous) or a combination of the two. It is very important to remember that the goal of an industrial assessment is increased operation efficiency and that the assessments are not focused on environmental or safety compliance issues although improved compliance can be a benefit of the assessment. If a facility has particular issues it would like to resolve, the Assessment Team can choose to focus on that particular area. For example, a facility has had increasing waste generation from its operations. The Team can focus on the operations that are generating wastes with the end goal to reduce the pollution generated. Another example would be if a facility is having problems with electricity demand charges and the Assessment Team chooses to focus on energy consuming operations with the end goal to reduce the electrical charges.

Industrial assessments vary from facility to facility depending on the types of operations conducted. The assessment process will be the same for each facility but will vary in the details. This section will describe the basic concepts and organization of an industrial assessment. An example illustrating the concepts presented in this chapter is given in Section 2.3.

Exhibit 2.2: Assessment Procedures

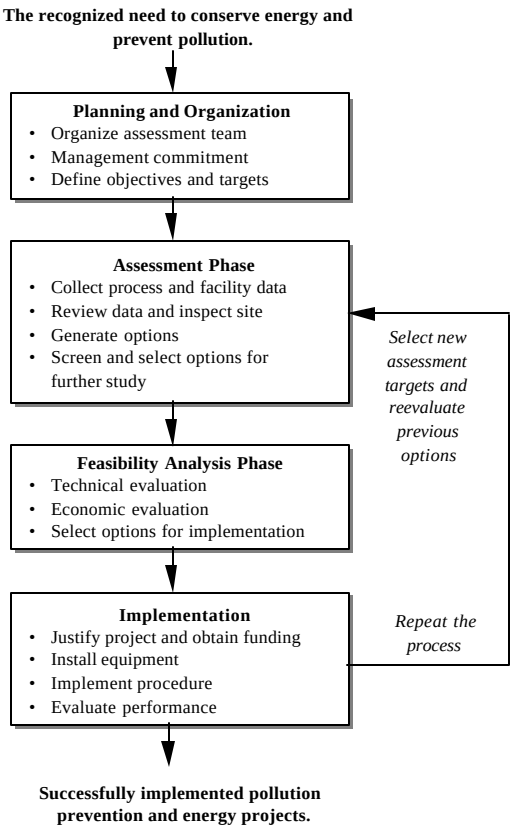

2.2.1 Planning and Organization

The industrial assessment requires planning and organization. This phase includes assemble of the Assessment Team, obtaining management commitment, and defining objectives and targets for the assessment.

The first step in conducting an industrial assessment is to assemble the Assessment Team. An industrial assessment is the examination of the entire operation and as such should include personnel from many areas of the facility. The size of the Team will vary on the size and complexity of the operation or process selected to assess. In addition, the composition of the Team may vary if the assessment is being performed in-house or is being conducted by a consultant. Core team members will include those that are involved with the operation or process, both supervisors and staff (e.g., line workers) as well as energy management and environmental staff. Other areas of expertise you may consider to augment the core Assessment Team include the following.

- Health and Safety
- Facilities or Civil Engineering
- Quality Control
- Accounting and Finance
- Purchasing and Contracting
- Legal

Each member of the Assessment Team provides key pieces of information necessary to get the entire picture of the operation. It is important to keep in mind that you want to look at the operation from all aspects and that the assessment is meant to provide constructive criticism to improve the entire operation.

Notes

Once the Assessment Team is established, you will need to meet to discuss the assessment strategy prior to the assessment. The Team should determine:

- **What** processes will be assessed.
- **Who** will be involved with the assessment (i.e., Team members and shop staff).
- **When** will the assessment occur.
- **How** will the Team approach the assessment.

An important part of planning is piecing together knowledge about the selected process to begin building an understanding of what may be involved in the assessment phase. Team members should contribute what they know about the process, especially those who work directly with the process. The Team should also obtain pollution prevention case studies, model shop descriptions, and other resources that can provide pollution prevention ideas for processes that are similar to the one being assessed.

The Team should decide on a data collection format for the assessment. The format can be a standard format, such as the worksheets provided in EPA's Facility Pollution Prevention Guide (EPA/600/R-92/088). Alternatively, the Team may want to develop their own assessment worksheets, questionnaires, or checklists that may be used to collect data and observations during the site visit. Examples of types of information to collect in worksheets, questionnaires, or checklists include the following items.

- Process descriptions/flow diagrams
- Energy consumption
- Input materials
- Waste streams
  - Air
  - Water
  - Hazardous waste
  - Solid waste
- General questions/observations
  - Material handling techniques
  - Storage procedures
  - Housekeeping
- Process specific questions/observations
  - Developed for the individual process
- List of major energy consuming and waste generating equipment

The Team should prepare an assessment agenda and schedule the assessment in advance to coincide with a particular operation of interest. Depending on the operation, multiple walk-throughs may need to be scheduled, particularly if there are several shifts. The Team may also want to conduct a pre-assessment whereby Team members begin collecting preliminary information about the process, such as process descriptions and flow diagrams.

2.2.2 Assessment Phase

The second phase is the assessment phase. This phase is broken in to two parts: pre-assessment and assessment.

2.2.2.1 Pre-Assessment Activities

It is a good idea to obtain information prior to the assessment. This will allow the Team to study the information and prepare additional questions. This part of the assessment is called pre-assessment activities.

Pre-assessment data collection should include general information about the facility. This information should include a facility description, a process description, a process flow diagram, and energy and waste data collection. The Assessment Team should collect data for a twelve-month period. Utility costs, raw material and waste generation data should be for the same 12-month period. The Team should be cautious about collecting data that is not necessary to complete the assessment. At this point, the Team should collect basic information that will give them the big picture and collect other information as necessary to complete opportunity analysis.

Notes

Facility Description

A facility description should include the following basic items: point of contact (if applicable), annual business volume, annual business sales, the number of employees, previous energy conservation and pollution prevention efforts, operational schedule, and general characteristics of plant facilities. This information will provide scale of operation and comparison for energy consumption and waste generation versus production. In addition, a general layout of the facility is helpful to provide orientation and scale of facility operations. A simplified drawing of the facility is helpful in determining measurements and logistical aspects of potential opportunities. An example facility description and facility layout is provided in Section 2.3.

Process Description

The process description is a very important part of the information collection process as it will provide the basic information needed to generate process flow diagrams and for opportunity analysis. A process description should include the following elements:

- Description of the products produced (i.e., tooth brushes, decals, blue jeans),
- Description or brief list of raw materials,
- Step-by-step description of unit operations from the beginning of the product manufacture following through to the finished product, and
- Notations of any energy consuming equipment ratings (i.e., ovens at 500°F, steam at 75 psi) and wastes generated (these can be made in the description or can be noted on the flow diagram).

Process Flow Diagram

Developing a flow diagram from scratch may require team members to discuss the process with the supervisor along with multiple members of the staff. The Team will need to visually observe the process and obtain an adequately detailed description of each step in the process in order to sketch a flow diagram. Block flow diagrams are useful tools for the assessment. A model block diagram is provided below in Exhibit 2.3.

Exhibit 2.3: Block Diagram Model

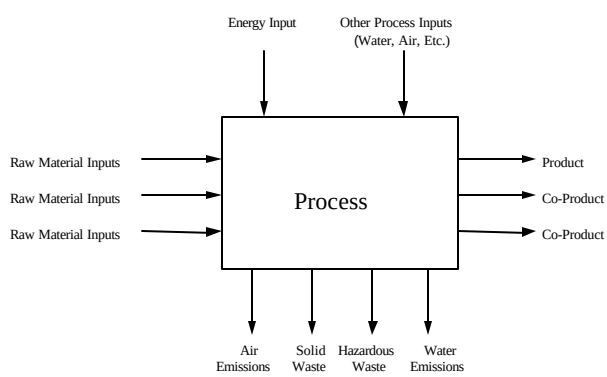

A flow diagram is simply a series of block diagrams that visually describe the process or flow of materials. For each block in the flow diagram, the Team should obtain data including raw material input, waste stream output, utilities, products, and co-products. All data should be based on the same time unit, e.g. annual, quarterly, or monthly. At a minimum, the Team should collect the data elements above.

In addition to the basic raw material and waste stream information described above, you should note other information pertinent to the assessment. For example, you should identify the following.

- Co-products that are recycled back into the process.

Notes

- Pollution control devices.
- Routine and non-routine input materials and waste streams.
- Environmental fate of waste stream (e.g., landfill, recycle, hazardous waste, etc.).
- Temperature settings of any operation that requires heat or cooling.
- Pressure settings for compressed air and requirements at the point of use.
- Pressure requirements for steam and actual steam generation pressure.

Example flow diagrams are given in Section 2.3. These diagrams should follow the process description and will visually illustrate the flow of materials and energy usage for specific operations. These diagrams can be used to determine where energy is being consumed and wastes are being generated.

Energy and Waste Data Collection

Information obtained prior to the assessment can become a springboard in the determination of possible energy conservation and pollution prevention opportunities. Collecting this information prior to the actual assessment allows the Team to analyze, graph, and review the information and generate more questions.

Information to collect prior to the visit includes raw materials, waste streams and environmental releases, and utility information. The Team should limit this information collection phase to only information that will be necessary for the assessment. If the Team has chosen to focus on a specific operation or on energy conservation, only information for those areas should be collected.

Raw Materials

- Weight and/or volume of procured raw materials, along with purchase costs.
- Inventory practices.

Waste Streams and Environmental Releases

- Volume and characteristics of hazardous wastes generated, waste management and disposal costs.
- Volume and characteristics of air emissions and waste management costs.
- Volume and characteristics of wastewater discharges and management costs.
- Other releases and environmental impacts.

Utilities

- Utility consumption and costs.
- Maintenance of on-site utilities (e.g., emergency generators).

Equipment and Operations

- List of major energy consuming equipment such as heaters, air conditioners, water heaters, and specific process-related equipment
- General Operation equipment information such as cleaning tanks, solvent recovery systems, and other equipment that have a secondary role in the main operation.

Sources of process information that the Assessment Team may refer to are:

- Permit and/or permit applications,
- Internal environmental audit reports,
- Biennial hazardous waste reports,
- Operator data logs,
- Waste handling, treatment and disposal costs,
- Water bills,

Notes

- Material safety data sheets (MSDSs),
- Product composition and batch sheets,
- Electric, natural gas, and/or fuel oil bills, and
- Standard operating procedures (SOPs).

Analysis of Energy Information

The Team should collect utility usage and cost data for the previous 12-month period prior to the assessment to allow the data to be summarized and graphed. There are three reasons for collecting energy information prior to the assessment: (1) to determine how much energy is consumed, (2) how much it costs, and (3) what are the trends in energy usage. Energy bills yield information that may provide recommendations before the assessment such as energy demand rescheduling, avoidance of late payment penalties, and energy ratcheting errors.

Once information for each energy source is collected the Team must convert the different energy types to BTUs to allow comparison and overall trending of energy usage. Presentation and reference to this information is usually done in a table and graphical format. Examples of energy usage information are presented in Section 2.3.

For electric utilities; the Team should collect the following key pieces of information.

- Electricity Usage
- Energy Charge
- Peak Demand
- Demand Cost
- Other Costs
- Reactive Costs
- Total Electric Cost
- Unit Electric Cost (calculated average)

Review of electricity and other utility use will enable the Assessment Team to determine trends for the heating season, the cooling season and possible seasonal trends in manufacturing.

The Assessment Team should collect natural gas usage information for the same 12-month period as for other energy sources. Examination of natural gas usage can reveal the following types of potential problems.

- Leaking Fuel Lines
- Faulty Temperature Measuring Devices
- Faulty Relief Valves
- Excessive Burner Cycling
- Warped Furnace Doors
- Deteriorating Furnace Insulation

Natural gas supplied to industrial operations is usually done on an interruptible basis. This allows the facility to obtain lower rates for their natural gas use. Interruption of gas service is done to meet demands for heating private homes during winter months. Facilities that have an interruptible gas supply must maintain a back-up fuel supply such as fuel oil.

The Assessment Team should collect fuel oil usage information for the same 12-month period as for other energy sources. In the United States three types of fuel are available. The most expensive oil is No. 2, 138,000 Btu/gallon. A little cheaper option is No. 4, 142,000 to 145,000 Btu/gallon and the cheapest is No 6, 149,690 Btu/gallon. It is important to keep in mind that the fuels are not interchangeable because the combustion equipment is designed for only one type of fuel. If a facility uses more than one type of fuel oil, the Team should make separate tables and graphs for each type of fuel.

Graphical representation of the data subsequently provides the Team the next logical step in the energy usage analysis progression. Experience indicates that graphical summaries are easily read and understood indicators of relative proportions. Usage patterns normalized for comparison to regional and like industries may indicate abnormalities worthy of investigation. A graph for each energy source and a summary graph with all energy sources should be prepared with the unit of measure for energy in BTUs

Notes

versus each month. It is important when comparing different energy types to use the same unit of measure. The type of graphs listed below will aid in trend analysis.

- Monthly Electric Usage
- Monthly Natural Gas Usage
- Monthly Fuel Oil Costs (make separate graphs for multiple types of fuel oil)
- Monthly Fuel Oil Usage (make separate graphs for multiple types of fuel oil)
- Monthly Itemized Electric Costs
- Monthly Natural Gas Costs
- Monthly Total Electric Costs
- Summary Cost Graph (with all energy types)
- Summary Graph (with all energy types

Raw Material and Waste Generation Data

Prior to the actual assessment, the Team should also collect raw material and waste generation data. Collection of this information will permit the assessment Team to become familiar with the types of materials used in the facility and the resulting waste streams that are generated. The Team should review this data prior to the actual assessment to begin generating additional questions. In addition to the basic raw material and waste stream information described above, other types of information pertinent to the assessment should be identified.

- Co-products that are recycled back into the process.
- Pollution control devices.
- Routine and non-routine input materials and waste streams.
- Environmental fate of waste stream (e.g., landfill, recycle, hazardous waste, etc.).

Raw materials can be provided in advance of the assessment in a table or can be provided in the flow diagrams. All material information collected should be for the same 12-month period. Facility personnel will find that collecting raw material information will be simpler using the table format and then use this information to break raw material information down into operations for the flow diagrams.

Equipment List

Equipment used in a facility are key to determining benefits and costs from potential pollution prevention and energy conservation opportunities. Prior to the assessment the Team should try to obtain information about major pieces of equipment. Information to collect about equipment will vary with the type of equipment. Chapter 5 describes industrial operations common in many types of facilities. Chapters 6-10 describe types of energy consuming equipment. Review of these chapters will provide a general understanding of common operations and equipment. This will provide some insight into what types of information are needed to evaluate a particular opportunity. Information to collect for various pieces of equipment includes the following.

- Equipment Rating
- Average Load
- Energy Source
- Hours of Operation
- How big is the tank?
- What are the operation requirements?
- At what pressure does the system generate steam or compressed air?
- How much liquid does the tank typically contain?
- What is the equipment used for?

At a minimum the Team should make a list of major pieces of equipment and collect specifics as needed for opportunity evaluation.

2.2.2.2 Assessment

This is the most important phase of the assessment as this is the opportunity for the Team to observe actual operations, talk with all levels of facility personnel, generate a list of possible opportunities, and collect

Notes

information to evaluate those opportunities. The assessment can be organized into the following six main steps.

1. Kick-off Meeting
2. Discussion of Operations
3. Walk-Through of Facility Operations
4. Brain Storming
5. Identify and Fill Data Gaps
6. Wrap-up Meeting to Discuss Opportunities

Kick-off Meeting

A kick-off meeting is a key element in presenting the assessment to facility personnel who will be involved in the actual assessment but are not on the Assessment Team. This is the Team's opportunity to present the goals of the assessment, discuss organization of the assessment, and anticipated results of the assessment.

Discussion of Operations

Directly following the kick-off meeting, the Assessment Team should review operations with facility personnel. This should include review of all data collected prior to the assessment, a step-by-step verbal walk-through of the process and review of the process flow diagrams. This will allow the Assessment Team to ask questions without straining to hear answers as they are walking through the facility. If preferred, the Team may wish to include a brief walk-through of the facility prior to these discussions.

Walk-Through of Facility Operations

During the walk-through, the Assessment Team should record observations about the operations and general appearance of the facility (e.g., evidence of leaks and spills). The Team should talk to several staff members, particularly if there are multiple shifts operating the process. The Team should take the time to explain the purpose and importance of the assessment to each staff member before asking questions. Team members should observe the workers performing their jobs and return to the process during different shifts, if possible.

After making real-time observations, the Team should compare written procedures with the observations. Written procedures will often contradict actual operations, and may indicate an energy conservation or pollution prevention opportunity such as a need for training and education.

During the walk-through, it is important to solicit assistance and input from all levels of staff on potential opportunities. The process operators are usually the best source of potential solutions, but may be reluctant to speak up about their ideas. If a staff member identifies an opportunity that is implemented, Team members should make sure that the employee is acknowledged and rewarded.

One should realize that the assessment and data gathering portion of the assessment might take considerable time and several iterations, depending on the size and complexity of the process. The Team should return to the process as often as necessary to gather adequate data to develop a list of opportunities.

Brain Storming

Once the data collection and process assessment is complete, the Team will need to evaluate the data and observations collected, and begin developing a list of energy and pollution prevention opportunities. It is important to perform this step as a team, with everyone contributing their ideas equally.

It is a good practice to allow the free flow of ideas at this point. The Team should begin developing a list of ideas, without regard to cost or feasibility. This process is called Brain Storming. This is the point where observations made during the walk-through are transformed into energy conservation and pollution prevention opportunities.

Notes

If the Team is experiencing difficulty identifying pollution prevention options, the Team should try tapping into other information sources and technical assistance. Appendix A- Sources of Information provides a number of technical assistance resources, such as pollution prevention clearinghouses, Internet resources, and technical support.

To begin developing a list of options, the Team should identify the most problematic areas such as compressed air leaks, increased monitoring of boiler efficiency, large volume or highly toxic waste streams, inconsistencies with written procedures, lack of environmental ethic, or poor housekeeping efforts.

Another method to identify energy conservation or pollution prevention opportunities is to evaluate each energy source or waste stream individually. First, the Team should determine the cause and effect of the waste stream by tracking the waste stream back through the process to input materials; and then identify potential ways to reduce the waste streams. For example, if the waste stream is dry absorbent contaminated with hydraulic oil, one may be able to back track to the cause for the usage of dry absorbent to a leaking valve. By fixing the leaking valve, there is an opportunity to (1) reduce hazardous waste generated, and (2) reduce the amount of hydraulic oil purchased.

One should also consider a wide range of projects. The following provides a list of potential pollution prevention approaches that should be considered during the option generating process.

- Policy Changes
- Procedural Changes
- Equipment Modifications
- Material Substitution
- Training
- Efficiency Improvements
- Waste Stream Segregation
- Housekeeping Practices
- Inventory Control
- Reuse of Materials
- Equipment Maintenance (i.e., repair compressed air, steam, and fluid leaks

Identify and Fill Data Gaps

Once the list of energy conservation and pollution prevention opportunities has been generated, the Team should review the data that has been collected. The purpose of this review is to ensure that the Team has all the data that it needs to complete a feasibility analysis for the all the options. This would include light or temperature measurements, counting light fixtures, etc. If any information has not been collected the Team should, make every attempt to collect it before leaving.

Wrap-up Meeting

Finally, the Team should sit down with the process supervisor and other management personnel to review the data collected. The Team should also discuss overall observations and general energy conservation and pollution prevention opportunities that will be addressed in the following phases of the assessment. Obtaining input from facility personnel at this point is key to gaining support for implementation of opportunities.

2.2.3 Feasibility Analysis Phase

The third phase of the assessment methodology is the feasibility analysis. The feasibility analysis phase consists of three post-assessment activities: (1) prioritization of opportunities, (2) evaluation of technical and economic feasibility, and (3) generation of an assessment report.

2.2.3.1 Prioritization of Opportunities

Because of time and resource constraints, most facilities have to set priorities among their energy conservation and pollution prevention options based on the original goals and criteria specific to the processes evaluated.

A relative ranking of opportunities can be developed by using a tool known as the decision matrix. The decision matrix tool can be used to rank the identified energy conservation and pollution prevention opportunities using a list of critical factors that are important to the facility. The decision matrix facilitates an

Notes

"apples-to-apples" comparison of options based on the selected list of critical factors, simplifying the group decision-making process.

Many companies have criteria for determining what projects will be implemented. For example, many companies have requirements that payback periods for all projects must be less than 1 year. The Team should consider common factors like payback period, cost savings, operational impact, compliance issues (both safety and environmental), and technical feasibility. Some opportunities will be easy to apply the criteria to, but more complex opportunities may require further analysis before a decision can be made.

To use the decision matrix, one should first assign either a numerical ranking to each of the critical factors, such as 1-10, or general terms such as "high," "medium," or "low." This approach can also be used if there is insufficient information for performing a quantitative ranking. In these cases, the Team should rely on best professional judgement to assign a ranking.

The Team can also decide on appropriate weighting factors. For example, the Team may decide that worker exposure issues are four times more important than future regulations. In this case, the Team would multiply the results of the criteria ranking by a factor of four to give this issue increased relative importance.

After the decision matrix ranking process is complete, you will have a ranked list of energy conservation and pollution prevention opportunities. The top ranked opportunities deserve the most immediate attention.

2.2.3.2 Evaluation of Technical and Economic Feasibility

Following the assessment it is necessary to evaluate the technical and economic feasibility of each energy conservation and pollution prevention project identified. A technical evaluation should include calculations of energy conservation or waste reduction and the associated costs, impacts on operations, and its advantages and disadvantages. Additionally, the technical evaluation should include an evaluation of the implementation aspects of the project including such things as: is there room in the facility for new equipment and will the new process affect the quality of the product.

The next step is to evaluate the economic feasibility of implementing each project identified. Three common financial performance indicators are used to determine the economic viability of energy conservation and pollution prevention projects: Payback Period, Net Present Value (NPV), and Internal Rate of Return (IRR) calculations. The Payback Period is the simplest of the three financial indicators and requires the least amount of data. The Payback Period calculations are normally used as a "rough" financial indicator in a decision matrix and for low risk projects. NPV and IRR calculations are detailed financial indicators that require additional data to be collected about the proposed projects. Both the NPV and IRR financial indicators are based on the time value of money over a specified period of time. Due to the complexity and importance of performing an economic feasibility, a detailed overview and example problem is provided in Chapter 3 "Evaluation of Energy Conservation and Pollution Prevention Opportunities."

2.2.3.3 Generate an Assessment Report

After the prioritization and evaluation of the identified opportunities is complete, the Team should generate a report from the data collected during the assessment and analysis of energy conservation and pollution prevention opportunities. This report should contain the following items:

- Executive Summary with a listing of energy conservation and pollution prevention measures recommended their estimated reduction of energy or waste, and an estimate of the payback period.
- General Facility Information as described in the pre-assessment activities above.
  - Process Description and Flow Diagrams
  - Utility information and Graphs
  - Raw Material and Waste Generation Listing
  - Equipment Listing

Notes

- Energy conservation and pollution prevention opportunity recommendations and analysis

The report should contain all the information needed to present the recommended opportunities to facility managers for possible implementation.

2.2.4 Implementation

Management support is the single most important element in successfully implementing opportunities from an industrial assessment. Regardless of the size or nature of the organization, top management must exhibit active and continuing leadership and interest in the results of the assessment. Facility employees will apply their best efforts to the opportunity only if their supervisors display a constant awareness of energy conservation and pollution prevention. With management support, the assessment be successfully implemented.

Actions taken to implement energy conservation and pollution prevention projects vary greatly from project to project and company to company. Some facilities may decide to use in-house expertise to implement projects while others may find it beneficial to contract the work to an outside organization. Either way, it is important that the Assessment Team tracks the progress of the project and the benefits realized from implementing them. Tracking implementation progress will prevent expensive equipment from being purchased but never installed, and help identify opportunities where equipment or programs may be modified to realize or improve the estimated cost and environmental savings.

After successfully implementing an energy conservation or pollution prevention project it is beneficial to advertise the cost savings and reductions in environmental impacts. Promoting the Team's successes will help build facility support (line operators to management) for the next project.

2.3 Example Facility Information Collection

This section illustrates the concepts presented in this Chapter using a fictitious manufacturing facility.

Assessment Scenario

The Assessment Team will be performing an industrial assessment at a medium size screen printing plant. Some of the products produced at the plant are truck decals and beverage dispensing machine colored panels. This facility is approximately fifteen years old. The facility is interested in an industrial assessment to find ways to increase operation efficiency. The aging equipment in the facility is increasing unit production costs and making it harder for the company to compete with newer facilities. The name of the facility will be Mars Screen Printing.

Exhibit 2.4 illustrates facility description information collected for Mars Screen Printing during a energy and waste assessment. This information can be used to gage the size of facility operations and make estimates for identified opportunities.

Notes

Exhibit 2.4: Example Facility Description

Company Name: Mars Printing Facility Description Information	
Address: 1678 Mars St. Anywhere, US 45609	**Contact Person:** John Smith **Contact Phone:** 619-123-4567
Annual Business Volume: 20 Million feet of printed material Production is not seasonal.	**Annual Business Sales:** Approximately $10 Million
Number of Employees: 250 **Employees per shift:** 1st - 150 7am-3pm 2nd - 100 3pm-11pm	**Operational Schedule:** 5 days per week, 50 weeks per year Facility closed one week in December and one week in July for facility maintenance.
Energy Conservation Measures Implemented: Installed ceiling fans in offices and break areas Installed occupancy sensors for lighting	**Pollution Prevention Measures Implemented:** None
General Facility Information:	
Age of Facility: 15 yr.	No. of Buildings: 1
Basic Construction: Concrete Block	Plant Size (ft^2 per building): 100,000 ft^2

Exhibit 2.5 is a layout of the Mars Screen Printing plant. The layout is not in great detail but does include general proportions of the facility and manufacturing areas. This will assist the Assessment Team when evaluating identified opportunities.

Notes

Exhibit 2.5: Mars Screen Printing Facility Layout

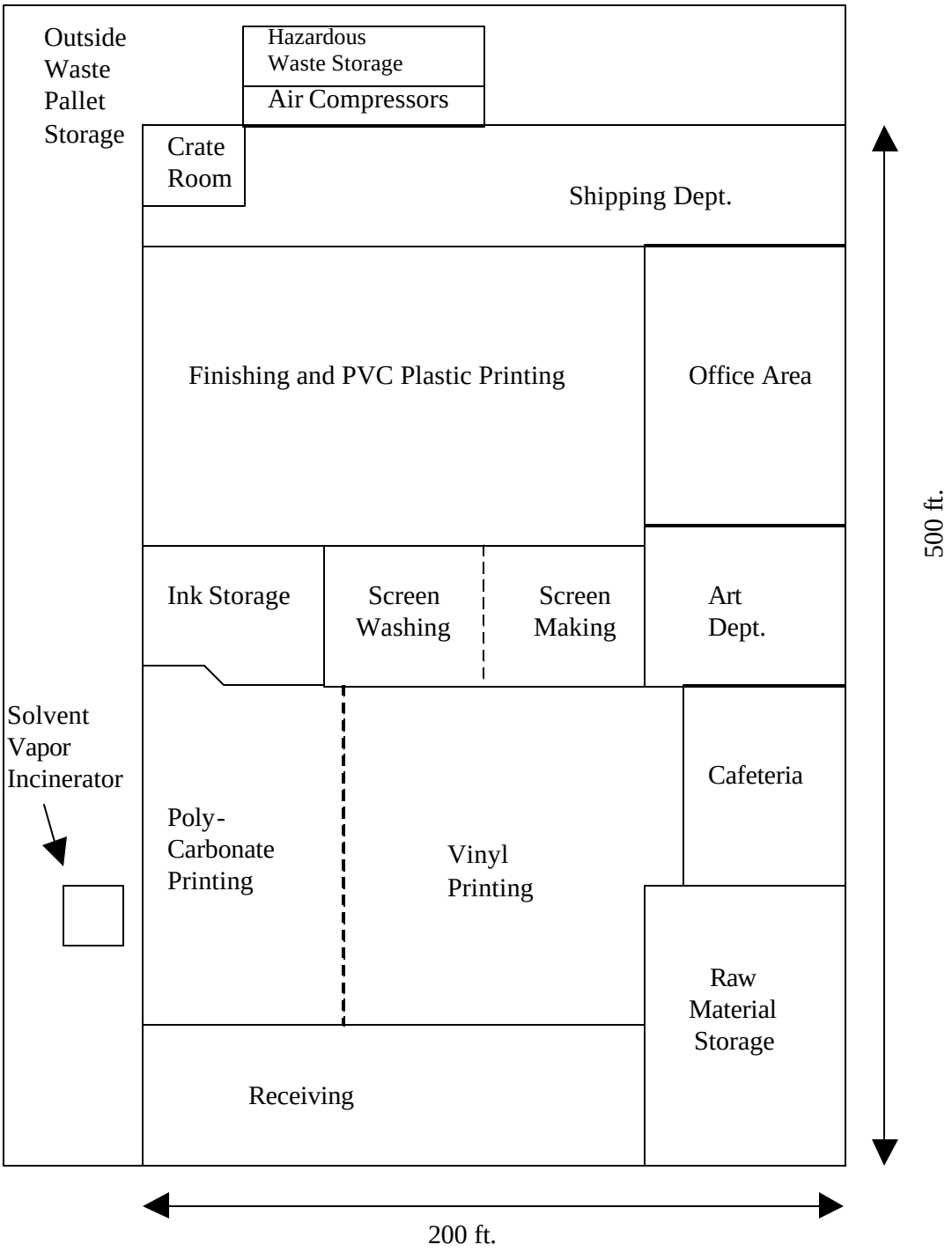

Exhibit 2.6 provides a brief process description of Mars Screen Printing operations. A process description should include enough detail to communicate current operations and support identified opportunities.

Exhibit 2.6: Example Process Description

Notes

Mars Screen Printing Process Description

This plant uses screen printing to produce, in several varieties and color schemes, fleet (transportation truck) decals, beverage dispensing machine colored panels and tooth brush backings. Raw materials include plastic sheets, rolls and spools of plastic stock, inks, adhesives, urethane and various other chemicals and solvents related to image production and printing operations.

The printing process begins with the plant receiving a mylar sheet with a positive image, paper copy or computer file from clients. Some artwork is done in-house. Images received on a computer disk, and other images developed on-site, are processed in a computerized system to yield a mylar positive. The image sheets are then transported to the screen-making department.

Screen images are produced in several steps. First, large screens are coated with a photo sensitive emulsion in an automated system. Emulsion is applied to smaller screens manually. Coated screens are then covered with mylar sheets containing positive images and are placed on a "burn table" which exposes the screen to ultraviolet light for a specified period of time which hardens the emulsion through transparent areas exposed to light. After exposure, screens are removed from the "burn table" and the uncured emulsion is washed away with a warm water high-pressure spray.

A prepared screen is mounted horizontally on a press, and ink is troweled into an above-screen reservoir. Ink is received in 3 to 5 gallon containers from which it is used directly or blended to customer specified colors in an ink-mixing area. During printing, a mechanical "wipe" moves across the screen and forces ink through porous areas onto the substrate sheets. Subsequent use of other screen images in a set produces a multi-colored image on the sheets. After printing, the substrate is placed on a conveyor for transport through an ink-curing oven. After curing, some of the printed substrates are coated with an adhesive or a thin urethane film-followed by heat curing. Finished materials are inspected, packaged and shipped to customers.

At the end of a printing run, screens are cleaned for reuse. Initially, excess ink is removed from screens with a putty knife. Next, they are hand-wiped with solvent-wetted paper towels while still positioned on the press. Then the screens are removed from the presses and are transported to a screen washing room. In this room, screens are positioned upright over a trough and dipped in ink-remover, and occasionally a "ghost" image remover is brushed into screen material, followed by a high pressure heated water rinse. In cases where it is not required to save a screen image, an emulsion remover is used to remove hardened emulsion. Clean screens are allowed to air dry and are returned to storage for future use.

Exhibits 2.7-2.9 are example flow diagrams for Mars Screen Printing operations. These flow diagrams use the block flow diagram method described in Section 2.2.2 of this chapter. These diagrams should include pertinent information to illustrate current operations and support identified opportunities. The Assessment Team should be cautioned to collect only information pertinent to identified opportunities and should not try to incorporate all available information into the flow diagrams or in the process description.

Notes

Exhibit 2.7: Example Flow Diagram for the Mars Screen Printing, Screen Making Operation

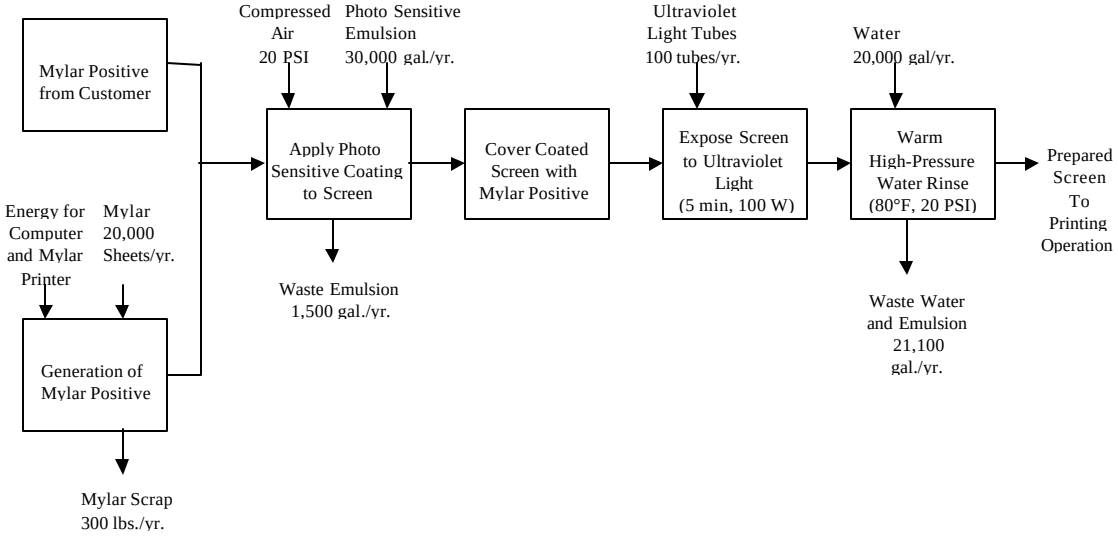

Exhibit 2.8: Example Flow Diagram for the Mars Screen Printing, Printing Operation

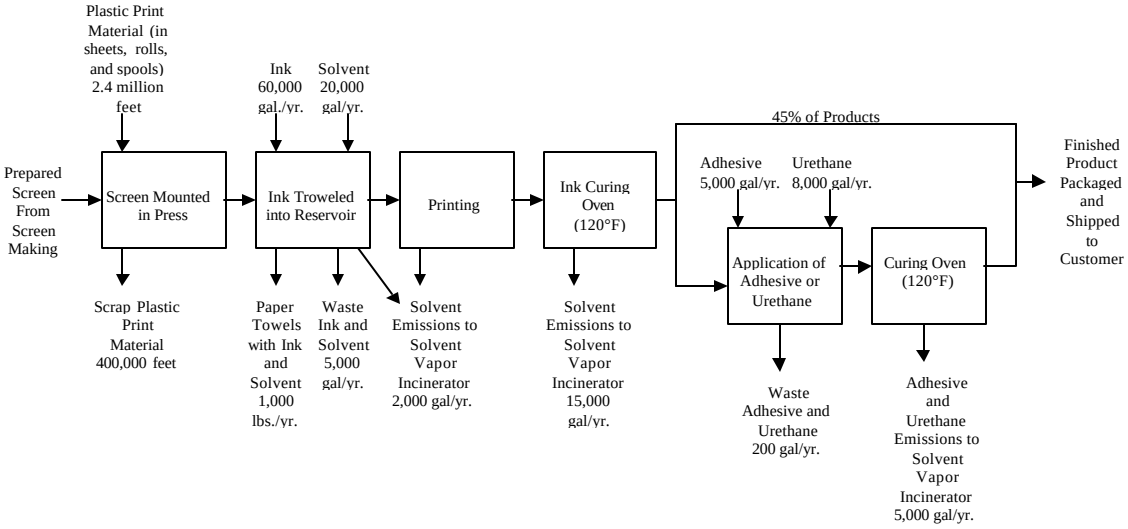

Notes

Exhibit 2.9: Example Flow Diagram for the Mars Screen Printing, Cleaning Operations

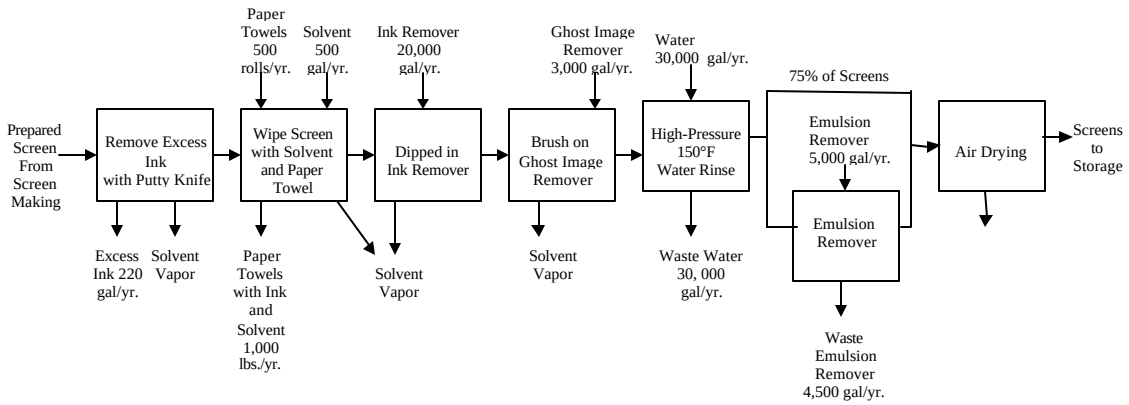

Exhibit 2.10 through Exhibit 2.12 are tables of energy consumption and cost information collected from Mars Screen Printing. Information collected for energy usage should be collected for each energy source for the same time period. The tabular format presented here provides a concise and uniform way to present information for review.

Exhibit 2.10: Example Electrical Summary

Month	Energy Usage (kWh)	Energy Charge ($)	Peak Demand (kW)	Demand Cost ($)	Other Costs ($)	Reactive Cost ($)	Total Elect. Cost ($)	Unit Elect. Cost ($/kWh)
Jan	250,000	19,185.42	584.0	7,965.82	215.13	110.15	27,476.52	0.078
Feb	254,400	19,495.87	556.4	7,595.74	214.97	116.98	27,423.56	0.077
Mar	246,800	18,979.84	552.8	7,530.38	213.21	111.22	26,834.65	0.077
Apr	247,600	16,077.64	551.6	4,245.78	194.66	113.77	20631.85	0.065
May	275,600	17,937.39	590.8	4,617.85	201.35	114.30	22,870.89	0.065
Jun	313,600	20,365.63	633.6	4,905.38	209.51	116.58	25,597.10	0.065
Jul	324,800	21,582.86	620.0	4,919.60	216.13	112.84	26,831.43	0.066
Aug	316,000	21,050.37	620.8	4,946.63	214.93	116.75	26,328.68	0.067
Sep	273,200	17,943.95	594.0	4,632.62	201.60	108.94	22,887.11	0.066
Oct	260,000	17,058.38	574.0	4,468.58	198.46	110.82	21,836.24	0.066
Nov	266,800	17,440.93	580.8	4,466.06	199.60	112.29	22,218.88	0.065
Dec	237,600	18,308.30	581.6	7,860.44	212.19	108.54	26,489.47	0.077

Notes

Exhibit 2.11: Example Natural Gas Summary

Month	Energy Usage (CCF)	Energy Usage (MMBtu)	Total Cost ($)	Unit Cost ($/MCF)
Jan	10,543	906.7	4,979	4.72
Feb	8,116	698.0	3,838	4.73
Mar	1,444	124.2	700	4.85
Apr	756	65.0	376	4.97
May	791	68.0	393	4.97
Jun	558	48.0	283	5.07
Jul	816	70.2	404	4.95
Aug	2,615	224.9	1,251	4.78
Sep	7,540	648.4	3,567	4.73
Oct	12,877	1,107.4	6,076	4.72
Nov	18,244	1,569.0	8,588	4.71
Dec	19,807	1,703.4	9,466	4.78

Gas Quality - 860 Btu/cf

Exhibit 2.12: Example Fuel Oil Summary

Month	Usage (gallons)	Usage (MMBtu)	Cost ($)	Unit Cost ($/gal)	Tax ($)
Jan	5,878	829	3,804.35	0.65	11.38
Feb	3,024	426	1,910.83	0.63	5.72
Mar	-	-	-	-	-
Apr	-	-	-	-	-
May	-	-	-	-	-
Jun	-	-	-	-	-
Jul	-	-	-	-	-
Aug	-	-	-	-	-
Sep	-	-	-	-	-
Oct	-	-	-	-	-
Nov	3,515	496	2,227.86	0.63	6.66
Dec	-	-	-	-	-

Some examples of graphical representations of data collected for Mars Screen Printing Company are presented on the following pages. Exhibits 2.13 and 2.14 are overall energy consumption and energy cost summaries. Exhibits 2.15 and 2.16 provide a graphical illustration of electricity usage and cost. Graphical illustration of natural gas and fuel oil usage have not bee included here but should be provided during assessment documentation to provide a complete picture of energy usage.

Notes

Exhibit 2.13: Summary of Energy Usage

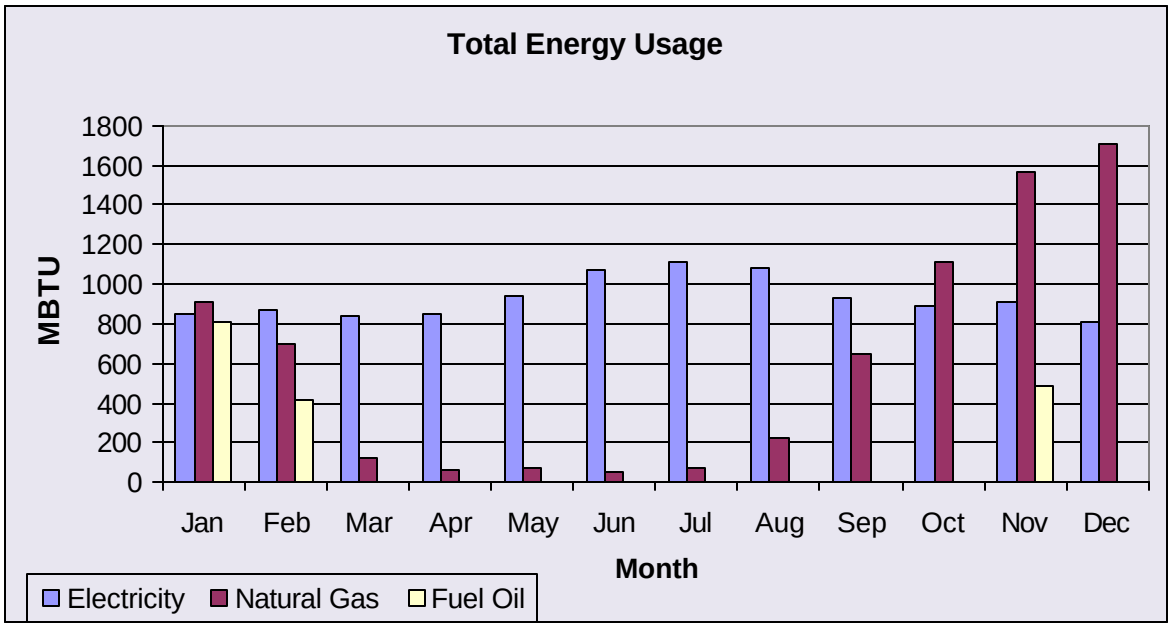

Exhibit 2.14: Summary Energy Costs

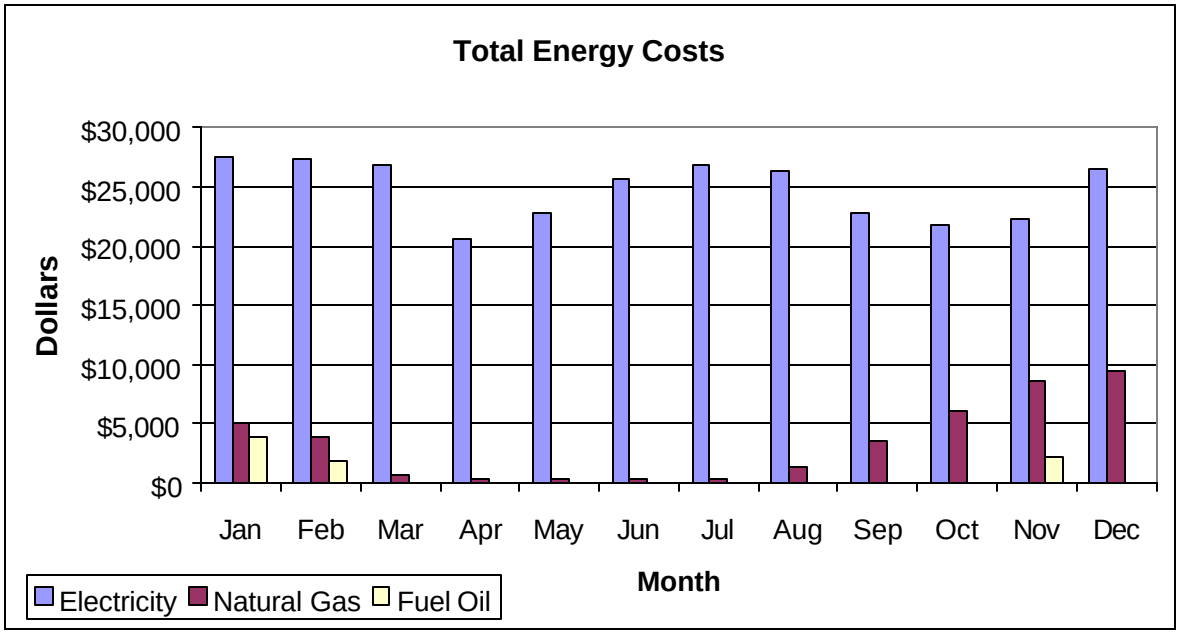

Notes

Exhibit 2.15: Electrical Costs

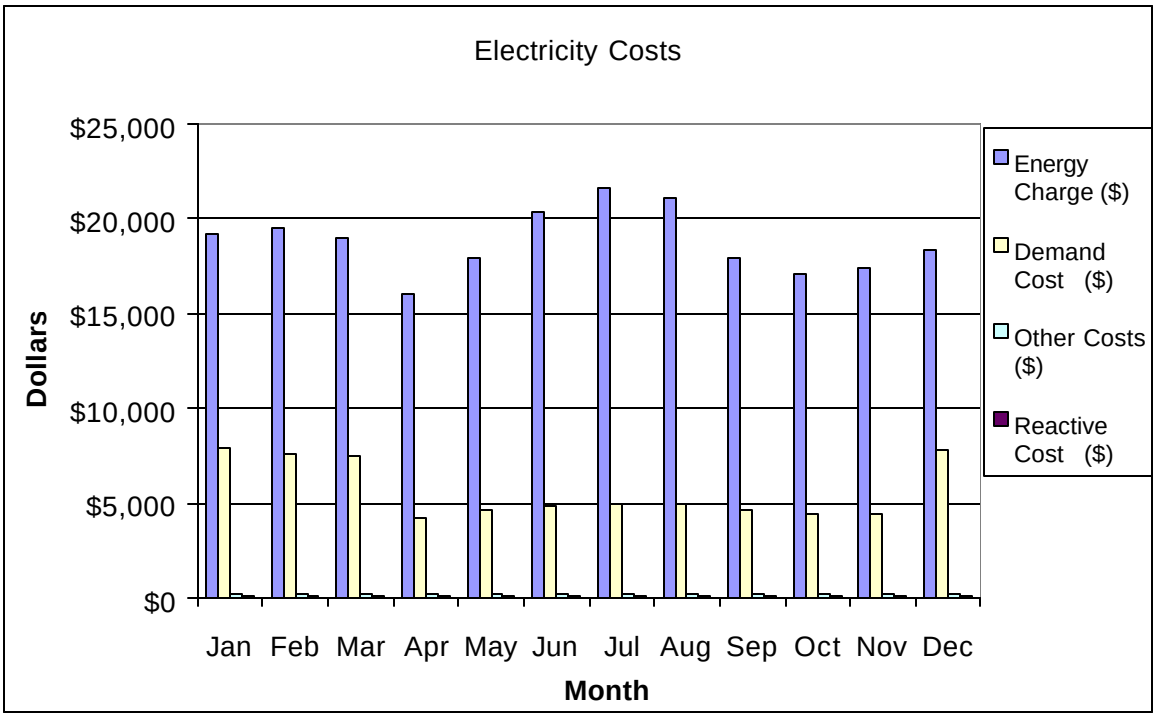

Exhibit 2.16: Mars Screen Printing Electricity Usage

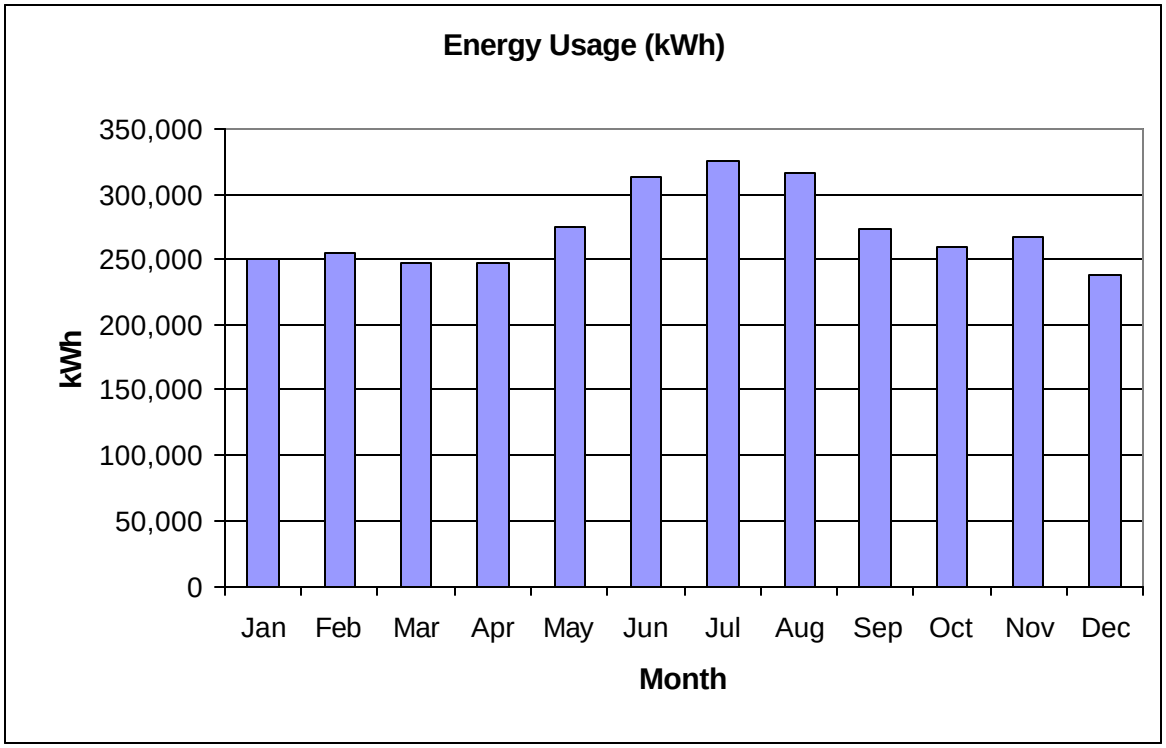

Notes

Raw material and waste generation information collected during an assessment should be compiled in an easy to reference format. Exhibit 2.17 presents one format for presenting raw material information. Raw material usage information should be collected for those materials that pertain to opportunities identified during the assessment to avoid unnecessary information collection. This will save time and labor for the more important task of evaluating opportunities.

Exhibit 2.17: Example Raw Material List for Mars Screen Printing

Material	Volume or Weight per Year	Cost per Unit or Total Cost
Adhesive	5,000 gal	$6,750
Emulsion Remover	5,000 gal	$9,750
Ghost Image Remover	3,000 gal	$4,800
Ink – various colors	60,000 gal	$156,000
Ink Remover	20,000 gal	$28,000
Mylar	20,000 sheets	$27,000
Paper Towels	500 rolls	$550
Photo Sensitive Emulsion	30,000 gal	$70,000 /yr.
Plastic Print Material – rolls	750,000 feet	$172,500 /yr.
Plastic Print Material – sheets	1 million feet	$200,000 /yr.
Plastic Print Material – spools	650,000 feet	$162,500 /yr.
Solvent	20,500 gal	$19,500 /yr.
Ultraviolet Light Tubes	100 tubes	$5,000 /yr.
Urethane	8,000 gal	$12,000 /yr.
Water	80,000 gal	$1,600 /yr.

Waste generation information can be collected from several sources at the facility. Waste generation information can be collected in the same format as raw material information. Facility personnel will find it much easier to collect data in a table format and then to apply that information to the process flow diagram.

Exhibit 2.18: Example Waste Generation Data for Mars Screen Printing

Material	Quantity	Disposal Type	Cost
Mylar Scrap	300 lbs./yr.	Landfill	$7
Waste Emulsion	1,500 gal/yr.	Landfill	$2,700
Waste Water and Emulsion	21,100 gal/yr.	Sanitary Sewer	$420
Plastic Scrap	400,000 feet	Landfill	$100
Paper Towels with Ink and Solvent	100 lbs./yr.	Off-site Incineration	$100
Waste Ink and Solvent	5,000 gal/yr.	Off-site Incineration	$13,600
Solvent Emission	17,000 gal/yr.	On-site Incineration	$51,000
Excess Ink	220 gal/yr.	Off-site Incineration	$600
Waste Emulsion Remover	4,500 gal/yr.	Landfill	$12,200

Notes

The assessment team should also collect information about equipment that will be necessary to evaluate identified opportunities. Exhibit 2.19 provides some example information collected for Mars Screen Printing. This information will be used to calculate energy usage and waste reductions as well as cost savings.

Exhibit 2.19: Example Equipment List and Pertinent Information

Boilers

- Fuel Source – Natural Gas and Fuel Oil #2
- 150 BHP
- Steam generated at 150 PSI
- Average Load – 75%
- No Condensate Return
- 18 hrs/day in summer, 24 hrs/day in winter
- Used for process heat and space heating

Emulsion Removal Tank

- 3 ft x 5 ft x 5 ft
- No cover
- Not heated

Curing Oven

- Natural Gas
- Operation Temperature 120°F
- Operation Hours 16 hrs/day

Air Compressors

- One Screw Type Compressor – 100 HP
- One Reciprocating Compressor – 50 HP
- Air Pressure 70 PSI
- Used for equipment actuation
- Intake temperature - 85°F
- Average Load – 80%
- Operation 18 hrs per day

Ink Curing Oven

- Steam heat from boilers
- Insulated
- No covered opening

The assessment team should brain storm possible opportunities to be implemented in the facility. After the team has developed its initial list of opportunities the team should list these out and collect information necessary to evaluate each opportunity. A list of potential opportunities for our fictitious facility, Mars Screen Printing is given in Exhibit 2.20.

Exhibit 2.20: Energy Conservation and Pollution Prevention Opportunities for Mars Screen Printing

Energy Conservation Opportunities

1. Increase Monitoring of Boiler Efficiency to Maximize Fuel Use
2. Repair Compressed Air Leaks
3. Repair Steam Leaks
4. Return Condensate for Supply Water Pre-heating
5. Schedule Use of Electrical Equipment to Minimize Peak Demand
6. Recover Oven Exhaust Heat for Space Heating
7. Replace Compressor Belts with V-Cogged Belts
8. Insulate Bare Steam Lines
9. Lower Pressure of Compressed Air to Minimum Necessary Level

Notes

Pollution Prevention Opportunities

1. Cover Cleaning Tanks to Minimize Evaporative Losses
2. Recover Solvent from Exhaust for Equipment Cleaning
3. Minimize Ink Mixing to Reduce Excess
4. Improve Housekeeping
5. Substitute Non-Hazardous Inks for Current Inks

Using the opportunity list generated for our fictitious facility, an example decision matrix is provided in Exhibit 2.21. Chapter 3 discusses methods to evaluate the pollution prevention and energy conservation opportunities identified during an opportunity assessment.

Exhibit 2.21: Example Decision Matrix

Opportunity	Payback Period	Cost Savings	Technical Feasibility	Operational Impact	Compliance Issues
Energy Conservation Opportunities					
1. Increase Monitoring of Boiler Efficiency to Maximize Fuel Use	<1 yr.	High	Easy	Positive	Improve Air Emissions
2. Repair Compressed Air Leaks	<1 month	High	Easy	Positive	Reduce electricity use
3. Repair Steam Leaks	<6 months	High	Easy	Positive	Reduce fuel use
4. Return Condensate for Supply Water Pre-heating	>2 yr.	Medium	Hard	Positive	Reduce fuel use
5. Schedule Use of Electrical Equipment to Minimize Peak Demand	>1 yr.	Medium	Hard	Unclear	None
6. Recover Oven Exhaust Heat for Space Heating	>2 yr.	Minimal	May cause condensation of solvent in exhaust stack	Negative	Reduce energy use for space heating
7. Replace Compressor Belts with V-Cogged Belts	<1 month	Minimal	Easy	Positive	Increase efficiency
8. Insulate Bare Steam Lines	<2 months	High	Easy	Positive	Reduce steam use
9. Lower Pressure of Compressed Air to Minimum Necessary Level	<2 months	Medium	Easy	Unclear	Reduce compressed air use

Notes

Exhibit 2.21: Example Decision Matrix (cont.)

Opportunity	Payback Period	Cost Savings	Technical Feasibility	Operational Impact	Compliance Issues
Pollution Prevention Opportunities					
1. Cover Cleaning Tanks to Minimize Evaporative Losses	<1 yr.	Minimal	Easy	So impact for cleaning operations.	Reduced Air Emissions
2. Recover Solvent from Exhaust for Equipment Cleaning	>5 yr.	Medium	Hard	Disruptive during const.	Reduced Air Emissions
3. Minimize Ink Mixing to Reduce Excess	<1 yr.	Medium	Easy	Positive	Reduced Waste Disposal
4. Improve Housekeeping	<1 yr.	Minimal	Easy	Positive	Reduced Waste and Improved
5. Substitute Non-Hazardous Inks for Current Inks	Unclear	Unclear	Hard	Unclear	Reduced Air Emissions and Waste Generation

REFERENCES

1. *Federal Facility Pollution Prevention: Tools for Compliance*; 1994, U.S. Environmental Protection Agency. Office of Research and Development, Cincinnati, OH 45268. EPA/600/R-94/154.
2. *Pollution Prevention Act of 1990*
3. *Facility Pollution Prevention Guide;* 1992, U.S. Environmental Protection Agency. Office of Research and Development, Cincinnati, OH 45268. EPA600R92088.
4. *Energy Conservation Program Guide for Industry and Commerce: NBS Handbook 115*; 1974, U.S. Department of Commerce. National Bureau of Standards, Washington DC 20402.
5. *Energy Conservation Program Guide for Industry and Commerce: NBS Handbook 115 Supplement 1*; 1974, U.S. Department of Commerce. National Bureau of Standards, Washington DC 20402.

Notes

CHAPTER 3. EVALUATION OF ENERGY CONSERVATION AND POLLUTION PREVENTION OPPORTUNITIES

Evaluation of identified opportunities is the essence of an industrial assessment. Evaluation of opportunities provides a facility with information needed to make decisions on opportunity selection and implementation. There are five basic steps in the evaluation of energy conservation and pollution prevention opportunities and determining their feasibility.

1. Clearly describe current practices.
2. Describe the recommended energy conservation or pollution prevention opportunity.
3. Evaluate benefits.
4. Technical feasibility analysis.
5. Evaluate economic benefits.

These steps provide the framework for the feasibility analysis of each opportunity. As the team follows these steps, it will be compiling information for the analysis of each opportunity as well as the information that will be needed to justify implementation of the opportunity to management. The remainder of this chapter describes the evaluation process using these five steps. Two examples of opportunity write-ups are given at the end of this chapter to illustrate these concepts.

3.1 Describe the Current Practices

The first step in the analysis of an energy conservation or pollution prevention opportunity is to clearly describe the current practice in simple language. This description should include:

- Overview of current operations and procedures
- Assumptions
- Impacts
- Raw material costs
- Energy costs
- Waste management costs

A simple description will provide readers unfamiliar with the operation information needed to understand what is happening without knowing all the technical details.

3.1.1 Overview of Current Operations

An overview should include a description of the operation, procedures, equipment used, materials used, and wastes generated by the operation as necessary to provide background information for an identified opportunity. The operation can be defined in many ways but in the evaluation the Team should describe only the functions associated with the specific opportunity. For example, if the identified opportunity is to adjust the air fuel ratio of the boiler, the Team should describe operations or procedures associated with boiler operation and maintenance. If the identified opportunity were to adjust the boiler steam pressure, the Team should include information about boiler operation and maintenance as well as information about facility steam requirements.

The amount of information included in a description of current practices will vary in content and in detail. The overview should include enough detail to give anyone who reads the analysis the background needed to understand the process and the identified opportunity.

Notes

3.1.2 Assumptions

Inevitably the Assessment Team will need to make assumptions or estimates when information is not available or simply doesn't exist. In these cases, the assessment team will be required to make reasonable estimates based on available information, observation and best professional judgement. Any time the assessment team is required to make estimates or assumptions it is important to document this in the analysis write-up for future reference. These estimates or assumptions may include any assumptions with regard to labor costs, utility or waste disposal costs, hours of operation, or loads, etc. Assumptions do not necessarily need to all be stated in the background information but should be clearly stated when made.

3.1.3 Impacts

The impact that the current operation has should be described as part of the current practice. This would be the impact that the current practice has on the facility or operation energy consumption, waste generation, air emissions, and etc. For example, ink is mixed manually and personnel responsible for ink mixing consistently mix too much ink. The impact of this practice would be excess raw material purchases, increased waste disposal, and air emissions. For energy conservation opportunities the impacts that would be described might include increased energy consumption and air emissions, or increased demand charges.

3.1.4 Raw Material Costs

Raw materials account for a large percentage of an industrial facility's expenses. Raw materials include any material purchased for the purpose of producing a product or items or to be used in clean-up and ancillary operations. The Assessment Team can obtain raw material cost information from purchase records at the facility. In addition, when accounting for raw material costs, the Team should account for material management costs when applicable. For instance, if an opportunity will greatly reduce raw material purchases and there is an associated labor cost for managing the material (i.e., moving it around the facility, managing the containers, etc.) the team should include the reduced labor costs when evaluating the opportunity.

3.1.5 Energy Costs

Energy costs or utility costs are also major operating expenses for industrial operations. Some operations are very energy intensive requiring large amounts of energy for heating of materials to produce a product. The Assessment Team should review and account for energy costs during the assessment. Chapter 2 discussed the collection of electric, natural gas, or other energy source information to allow graphs and summary tables to be prepared. The following sections will discuss how to read the utility bills and define some of the terminology used.

3.1.5.1 Electric Bills and Rates

The structure of electric bills differs from region to region. The rates and structure of utility bills cannot be set arbitrarily since all utility companies are regulated by a Public Utility Commission or Public Utility Board of the state in which it operates. Approval is needed for any change in rates or structure and any change is subject to reviews confirming the necessity of such change. The rates reflect the requirement to maintain a sound financial condition of a utility company and also to pay a "reasonable return" to the shareholders.

The Electric Bill: Its Components and Where the Money Goes

1. Components Of Your Electric Bill
   - Customer Charge
   - Demand Charge
   - Energy Charge
   - Reactive Demand Charge
   - Sales Tax

Notes

2. What Is Included In The Customer Charge?
   - Fixed monthly amount designed to recover:
     - Service drop - wires from transformer to connection on building.
     - Meter.
     - Billing, credit and collection and related costs.
     - Customer service - costs to encourage safe, efficient and economical use of electricity.
3. What Is Included In The Demand Charge?
   - Generally based on highest 15-minute integrated kW demand during month or 80% of highest demand during winter months.
   - Designed to recover:

     Investments in generating plants.

     Investments in transmission system - 345,000, 115,000 & 34,500 volt lines and sub-stations.

     Investments in distribution system - all voltages below 34,500 volts, including distribution transformer.
4. What Is Demand (Load)?

   A. Assume: Fifty (50) - 100 watt light bulbs.

   All 50 bulbs are on at the same time.

   50 bulbs x 100 watts each = 5000 watts

   B. Total Demand (Load) on System:

   5000 watts/1000 = 5 kilowatts (5 kW)

   This is illustrated in Exhibit 3.1.

Exhibit 3.1: Relation of Demand (kW) to Energy (kWh)

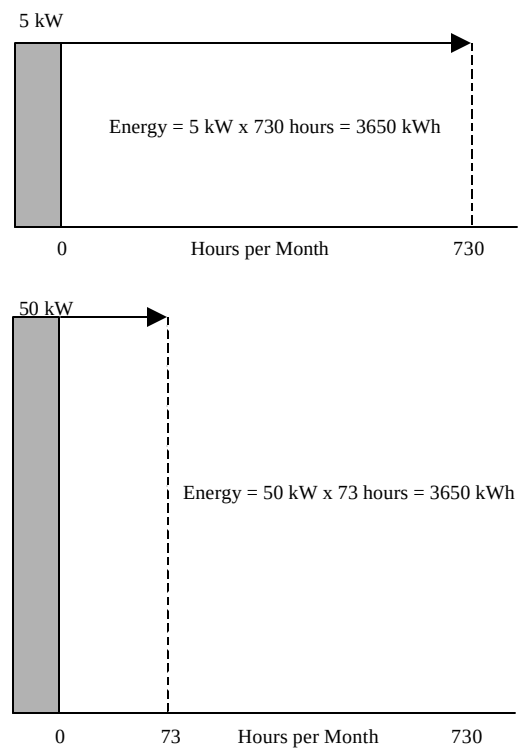

5. What Is Included In the Energy Bill?
   - Price per kWh designed to recover:

   Variable costs to generate electricity

   Oil costs

   Nuclear fuel costs

   Varies with voltage levels due to losses
6. What Is the Reactive Demand Charge?
   - An amount per kVAR of reactive demand in excess of 50% of monthly demand (LGS is 50% of first 1,000 kW of monthly on-peak kW demand and 25% of all additional monthly on-peak demand).
   - No kVAR billing unless power factor below 90% (higher for customers with demands in excess of 1,000 kW).
   - Designed to recover cost of capacitors used to offset effects of customers with poor power factor.

Notes

7. Sales Tax

   - If electricity is used in a manufacturing process, the customer can get an exemption for the majority of sales taxes. It is advantageous for the community to have the tax incentives in order to preserve or promote manufacturing in the area.

3.1.5.2 Example of Gas Bills and Gas Rates

Unlike electric charges, gas utility bills are very simple to read. In the following section a typical example of a monthly gas utility bill is introduced.

Terminology and the Bill

1. The service period on a monthly basis.
2. The rate schedule and terms used.

Gas company rates are based on the following priority schedule:

- GN-1 is for residential and small industrial users consuming less than 100,00 cubic feet of gas per day.
- GN-2 is for industrial users consuming over 100,000 cubic feet per day and who have standby fuel capability.

3. The actual month's consumption in cubic feet of gas.

- The billing factor is the actual heat content of the gas (can vary depending on location).
- The final column is the amount of therms used for the month.
- Meter units are 100 cu. ft. (i.e., example equals 3,806,000 cu. ft.).

Exhibit 3.2: Sample Natural Gas Bill

Service Address:_____

(1)

Service Period	
06-18-79	07-18-79

(2)

Rates	Therms
GN-1	
GN-2	17,667
GN-3	22,486
Total	40,153

$9,760.09

(3)

Meter Number	Meter Readings		Difference	Billing Factor	Therms
	Previous	Present			
2345678	917920	955980	38060	1,055	40,153

Our hypothetical bill is interpreted as follows:

1. Gas consumption @ GN-2 rate = 17,667 therms
2. Gas consumption @ GN-3 rate = 22,486 therms
3. Total gas consumption = 40,153 therms

Notes

4. Difference in meter readings = 3,806,000 cu. ft.
5. Btu content of gas = 1,055 Btu/cu. ft.
6. Amount of therms used per month

   = (3,806,000 x 1,055) / 1000,000 = 40,153 therms

1 therm = 100,000 Btu

Actual BTUs consumed = 40,153 x 10^5 Btu

In-Plant Metering

The monthly gas bills show how many Btu's have been expended to produce a product. However, the bill does not indicate where the Btu's where used in a particular gas consuming process.

As the nation's energy requirements grow, industry can expect to pay even more for gas in future years. Plants that remain dependent upon gas for their production processes will be placing even greater emphasis on in-house conservation efforts in order to achieve maximum production efficiency from this increasingly expensive fuel. Cost allocations within departments and fuel surcharges to customers will become commonplace. Close monitoring of allocated supplies will become a necessity in energy management. Gas consumption monitoring can also be advantageously used to control oven or furnace temperatures and prevent over-temperature damage.

A relatively low cost monitoring device is the "Annubar." This device is a primary flow sensor designed to produce a differential pressure that is proportional to the flow. The flo-tap annubar can be inserted and removed from operation without system shut down. It can be interfaced with secondary devices, a standard flow meter is available for rate of flow indication. It can also be used as a portable meter or permanently mounted one. Annubar connected to a differential pressure transmitter (electric or pneumatic) is used with a variety of standard secondary equipment for totalizing, recording, or controlling complex systems.

3.1.5.3 Fuel Oil Rates

A private contractor usually supplies fuel oil. The price is negotiated before the season or period of interest to both parties. The supplier is obligated to provide the oil to the customer for an agreed upon period (typically a year). The price is fixed for an estimated amount of consumption and provides for an adjustment if supplier's costs change during the period. The supplying company might require a minimum purchase, called "allotment," in order to maintain the required service as well as the price. It is noteworthy to point out that some customers may decide to burn more fuel than necessary for the operations just to preserve their pricing. The normal way of calculating the average cost of oil is simply the total money spent divided by volume purchased.

In the United States three types of fuel are available. The most expensive oil is No. 2 at 138,000 Btu/gallon. A little cheaper option is No. 4 with 142,000 to 145,000 Btu/gallon and the cheapest is No 6 with 149,690 Btu/gallon. It is important to keep in mind that the fuels are not interchangeable because the combustion equipment is designed for only one type of fuel. Different fuels also have to be handled differently, for example No. 6 fuel requires heating to flow. Detailed information about equipment, characteristics of fuel oils and exact Btu content is available from individual suppliers.

3.1.6 Waste Management Costs

Waste management costs include not only the actual disposal costs for waste materials but the on-site management costs like labor for drumming and moving the material, labor for waste treatment processes, and labor to file required paperwork. On-site costs may not be directly from a bill but can usually be closely estimated using information from various sources. This is often true for labor requirements for particular operations. The assessment team should use information from on-site interviews of facility personnel to make an estimate in these cases. The actual disposal cost information is available from hazardous waste manifests, bills for transportation, bills for solid waste disposal. The remainder of this

Notes

section briefly discusses the pertinent information that the assessment team will need to evaluate various opportunities.

3.1.6.1 Hazardous and Regulated Non-hazardous Waste Disposal

Hazardous and regulated non-hazardous waste disposal is a significant line item cost for facilities. When calculating hazardous waste disposal costs, the assessment team must include these items.

1. Disposal fees
2. Transportation costs
3. In-house labor for management (labor for drumming the waste, moving to hazardous waste storage, and filing paperwork)
4. Reduction in containers purchase for disposal

Not all of these costs will apply to every waste. For example if the facility is purchasing over pack drums for some of their wastes and not others. The team should use best professional judgement when applying these factors.

3.1.6.2 Solid Waste Disposal

Solid waste is what most people think of as trash. It would include waste paper, cardboard, personal items, food wastes, etc. While solid waste is not as expensive as hazardous waste to dispose of, it is still a significant expense. When calculating solid waste costs and cost savings, the team must include these items.

1. Tipping fees (fee for disposal in landfill or other similar fee)
2. Transportation costs, if any
3. Rental and pick-up fees for trash containers
4. In-house labor costs, if any

Again, the team should use best professional judgement to include or not include these and other costs.

3.1.6.3 Air Emission Management Costs and Emission Fees

Air emissions have become an increasingly important issue for industrial plants. Evaluation of opportunities that significantly reduce air emissions should include these items.

1. Air emission fees
2. Changes in air emission control costs
3. Changes in monitoring requirements for both environment and health and safety.
4. Changes in labor for management of air emissions.

3.1.6.4 Sanitary and Storm Sewer Discharge Fees

Sanitary and storm sewer discharge fees do not tend to be large line item costs for many facilities. Changes in fees as a result of implementing an opportunity should be accounted for or noted even if significant. Items that should be included in a cost evaluation are:

1. Discharge fee
2. Labor for on-site management of waste water or other solutions discharged to the sewer
3. Changes in treatment costs, if any.

There may be other items that may be added for various operations. The assessment team should include all significant items.

Notes

3.2 Describe the Recommended Opportunity

A description of the recommended action needed to accomplish the energy conservation or pollution prevention should be given in simple language with a minimum of technical details. The recommended action should include a description of the proposed change including equipment changes, process modifications, and changes in procedures. In addition, this description should point out the advantages and disadvantages in implementation of the opportunity. This description of the recommended action does not need to include calculations of energy and waste reduction, as these will be included in the next sections.

The advantages should include items like reduced waste generation, reduced energy consumption, improved efficiency of operations, etc. The disadvantages should include items like increased labor, noxious odors, extensive facility modifications, etc. The advantages for implementing an opportunity are sometimes obvious but often an assessment team will not account for the intangible benefits and likewise disadvantages. The benefits may include improved worker health from reduced exposure, improved public image, and reduced liability. Likewise, the disadvantages may include strong citrus odor from aqueous cleaner.

3.3 Evaluate the Energy Conservation and Pollution Prevention Benefits

The evaluation begins with the calculation of the current energy usage or waste generation for a particular piece of equipment or process associated with the identified opportunity. Information such as operation times, required pressures for steam and air, light levels, or waste generation information collected during the on-site assessment phase will be needed to complete the calculations. Next, the Team will estimate the energy conservation or pollution prevention potential from implementation of the opportunity. This may entail some initial research for information on equipment needed for implementation of the opportunity through literature searches or collection of vendor information to verify estimated reduction of energy consumption or wastes. It is important to note any assumptions made to complete calculations and where necessary conservative estimates should be made. The remainder of this section will discuss how to calculate energy consumption and conservation as well as waste generation and pollution prevention benefits.

3.3.1 Energy Conservation Calculations

When performing any type of comparisons between energy requirements for equipment of conservation alternatives; care should be taken to use the same unit of measurement for all types of energy in the analysis. Exhibit 3.3 lists several sources of energy and its common unit of measure. Usually as scrap material from a manufacturing process, wood is occasionally used as a fuel source in industrial boilers and is more commonly used in homes for space heating. Since the BTU value of wood varies significantly with its preparation and species, it has not been included in Exhibit 3.3.

Energy requirements for different applications also use diverse units of measure. For instance, cooling capacities of air conditioning units are usually measured in Tons, heating unit capacities are defined in BTUs, and motor capacities are measured in horse-powers or watts. Exhibit 3.4 lists the common units employed for various applications. It should be stressed that while these are the common units applied to these applications they are not the only units of measure used for these applications. For example, heating units and motors are sometimes measured in KW instead of BTUs and hp. This is especially true of equipment that is purchased from countries where the metric system is used.

Notes

Exhibit 3.3: Common Units of Measure and Conversions to BTUs (U.S. Dept of Commerce, 1974)

Type of Energy	Common unit of Measure	BTU Equivalent
Butane, Liquefied	Gallons (Gal)	91,600 BTU/Gal
Coal, Anthracite	Pound(s) (lb or lbs)	13,900 BTU/lb
Coal, bituminous	Pound(s) (lb or lbs)	14,000 BTU/lb
Coal, lignite	Pound(s) (lb or lbs)	11,000 BTU/lb
Coal, Sub-bituminous	Pound(s) (lb or lbs)	12,600 BTU/lb
Electricity	Kilowatts-hours (KW)	3,412 BTU/KWh
Fuel Oil #2	Gallons (Gal)	140,000 BTU/Gal
Fuel Oil #6	Gallons (Gal)	152,000 BTU/Gal
Kerosene	Gallons (Gal)	134,000 BTU/Gal
Natural Gas	Cubic Feet (CF) or Hundreds of Cubic Feet (CCF) Therms	1,000 BTU/CF 100,000 BTU/therm
Propane, Liquefied	Gallons (Gal)	103,300 BTU/Gal

Exhibit 3.4: Units of Measure for Various Applications (U.S. Dept of Commerce, 1974)

Application	Units of Measure	BTU Equivalent
Air Conditioning / Refrigeration	Tons	12,000 BTU/hr
Heating	BTUs	---
Motors	Horsepower (hp)	2545 BTU/hr
Boilers	Pounds of steam generated per hour or BTUs	Varies with specific characteristics of boiler
Lighting	Watts	3.412 BTU/hr

When calculating energy conservation opportunities you must be sure to account for these factors.

- Current energy usage
- Projected energy consumption reduction
- Energy consumption of new equipment
- Changes in energy requirements for associated equipment

Each of these factors should be clearly stated with any assumptions that have been made to complete the calculations. Chapters 6 - 10 discuss various types of equipment used in industrial and commercial applications. These chapters describe the equipment, energy usage and some energy conservation opportunities.

3.3.2 Pollution Prevention Calculations

There are many factors that the assessment team must account for in evaluating a pollution prevention opportunity. These factors are:

Notes

- Changes in raw material consumption
- Changes in hazardous waste generation
- Changes in solid waste generation
- Changes in air emission generation
- Changes in energy usage

Implementation of a pollution prevention opportunity may need to include all these factors or may include only a few. When performing any type of comparisons for pollution prevention opportunities; care should be taken to use the same unit of measure for all types of materials used in the analysis. This means that to ensure consistency in your calculations all raw materials should be converted to the same unit of measure if possible. For example, if a facility lists it raw materials for a printing operation as 60,000 gal of ink and 20,000 lbs. of ink remover, the unit should be converted to either both be pounds or both be gallons.

After performing these energy conservation and pollution prevention calculations, this information will then be used to calculate the cost savings for the given opportunity.

3.4 Technical Evaluation of Energy Conservation and Pollution Prevention Projects

A technical evaluation will determine whether a proposed energy conservation or pollution prevention option is technically feasible. Some technical evaluations will be straightforward, such as procedural or housekeeping changes, which may require little more than review, approval, and training of selected staff. Other technical evaluations will require the expertise of a variety of people. You may require significant coordination with the operators, vendors, and consultants before deciding whether a proposed pollution prevention solution is feasible. In some cases, you may need to test your proposed solution in a laboratory or perform a field demonstration. Also keep in mind that some equipment vendors are willing to validate their applicability to your process prior to purchase of the equipment. Exhibit 3.5 presents typical evaluation criteria that will apply to implementation of an opportunity at a specific facility. Depending on facility requirements there may be other criteria that should be included.

These criteria will be used to build the information for the implementation costs. Correct estimation of implementation costs is very important as implementation costs can have a significant impact on a facility. When evaluating implementation costs, the assessment the team should consider these items.

- Cost of equipment
- Cost for facility modifications
  - Expanded plant area
  - Improvements to utilities
  - Ventilation requirement
- Installation costs
- Employee Training
- Periodic Maintenance
- Annual Operating Costs
  - Utilities
  - Labor
  - Training
  - Maintenance
- Replacement parts and filters
- Cost of containers and other supplies associated with disposal

Notes

Exhibit 3.5: Typical Technical Evaluation Criteria

- Will it conserve energy or reduce waste?
- Is the system safe for our employees?
- Will the product quality be improved or maintained?
- Is there space available in the facility
- Are the new equipment, materials, or procedures compatible with our production operation procedures, workflow and production rates?
- Will more labor be required to implement the option?
- Will we need to train or hire personnel with special expertise to operate or maintain the new system?
- Do we have the utilities needed to run the equipment? Or, must they be installed at increased capital cost?
- How long will production be stopped during system installation?
- Will the vendor provide acceptable service?
- Will the annual operating and maintenance costs increase?
- Will the system create other energy consumption or environmental problems?

Also, if the opportunity will require installation of large pieces of equipment, the team should consider factors that will influence installation like will the equipment fit through existing doors. While this seems like an obvious question, several facilities have had equipment arrive for installation that wouldn't fit through the doors.

3.5 Economic Evaluation of Energy and Pollution Prevention Project Costs

An economic analysis is a process in which financial costs, revenues, and savings are evaluated for a particular project. This analysis is necessary to evaluate the economic advantages of competing projects and is used to determine how to allocate scarce resources. An accurate estimate of energy conservation and pollution prevention project costs is essential to decision making.

The easiest and most common economic evaluation is the one that compares the up-front purchase price of competing project alternatives. However, the up-front purchase price is typically a poor measure of a project's total cost. Other costs, such as labor, maintenance (including materials and wastes), reliability, disposal/salvage value, and training must also be accounted for in the financial decision making process. As a result, the type of economic evaluation tools and techniques used may vary from one facility to the next in order to perform a meaningful economic evaluation.

This section presents three methods commonly used to allow a comparison to be made between competing projects. These methods include:

- Payback Period,
- Net Present Value, and
- Internal Rate of Return.

Finally, two additional economic analysis tools are introduced at the end of this section: the Life Cycle Costing (LCC) tool and the Total Cost Assessment (TCA) tool. Both tools are used to establish economic criteria to justify energy conservation and pollution prevention projects. TCA is used to describe

Notes

internal costs and savings, including environmental criteria. LCC includes all *internal* costs plus *external* costs incurred throughout the entire life cycle of a product, process, or activity.

3.5.1 Common Methods of Comparing Financial Performance

Financial performance indicators are needed to allow comparisons to be made between competing project alternatives. Three methods of comparison are currently in widespread use: Payback Period, Net Present Value, and Internal Rate of Return.

3.5.1.1 Payback Period

The payback period is used most often. The purpose of the payback analysis is to determine the length of time it will take before the costs of a new project is recouped. The formula used to calculate the Payback Period is:

Equation: Payback period (in years) = I/(N-C)

where I = initial investment, start up costs (in dollars)

C = annual cost of current practice (in dollars/year)

N = annual cost of new practice (in dollars/year)

Although the payback period indicator is the simplest, there are certain limitations to the accuracy of the indicator. One limitation is that the payback period indicator does not account for all of the cash flows of a project. It considers the cash flows that take place before the start-up costs are paid back, but ignores all cash flows after this threshold. Ignoring these cash flows can skew the true profitability of implementing a proposed project.

As an example, when comparing two projects, A and B, and each requires an initial start-up cost or investment of $50,000 and project A generates $25,000 in revenues (or annual savings) for the next three years and project B generates $20,000 in revenues for the next 20 years. Using the principles of payback period, project A is more profitable than project B because you recover your start-up costs (or initial investment costs) earlier with project A. However, project A generates revenues for only three years, whereas project B continues to earn revenues for 20 years. This example illustrates that a projects payback period does not necessarily reflect its overall profitability because it only measures the time it takes to reach the break-even point for implementing a project. For pollution prevention projects, this can be an especially significant limitation because many annual operating costs may occur several years after the initial start-up costs have been incurred.

A second limitation is that complex scenarios can have multiple paybacks when annual operating costs vary significantly from year to year or when there are start-up costs in multiple years.

3.5.1.2 Net Present Value

The Net Present Value (NPV) method is based upon the concept that a dollar today is worth more than a dollar in the future, a concept known as the time value of money. This concept captures the cost of a given project, taking into consideration future value. The discount rate, similar to an interest rate, is the mechanism that equates today's dollar with its value in the future.

A simple illustration considers what the value of a dollar invested today will be worth in a year. At a simple interest rate of 5 percent, a dollar today is worth $1.05 one year from now. This is referred to as the "present value" of one dollar one year from now at an interest rate of 5 percent.

The selection of an appropriate discount rate is one of the most difficult aspects of a cost-benefit analysis, but it is also one of the most important. The discount rate is a function of what a business must pay to borrow money and what rate of return it must earn to satisfy a company's financial requirements. For evaluating multi-year and long-term projects, the identification of an accurate discount rate is crucial. For example, a project that looks favorable using a 3 percent discount rate may look very unattractive at a 10 percent rate.

Notes

For an investment to be cost beneficial, it must return more dollars in the future (i.e., benefit) than the amount of dollars spent in the present (i.e., the cost of the investment) to account for this difference in value. In other words, the dollar benefits gained in the future must be greater than the initial investment. This method progressively reduces (discounts) the value of costs and revenues occurring in future years. The formula for NPV is:

Equation: $I + [(AS - CE)_1(PVIF)_1 + (AS - CE)_2(PVIF)_2 + ... + (AS - CE)_n(PVIF)_n] = NPV$

where I = initial investment, start-up cost (expressed as a negative number)

AS = annual savings (cash inflows)

CE = capital expenses (cash outflows)

$(AS - CE)_1$ = net cash flow year 1

$(AS - CE)_2$ = net cash flow year 2

$(AS - CE)_n$ = net cash flow year n

$PVIF = 1/(1 + r)^t$ = present value interest factor

r = discount rate of money (i.e., current rate of return)

t = incremental time period, 0 thru n, normally expressed in years

The first step to determining the net present value of a proposed project is to determine the net difference (net cash flow) for each year over the specified time period $(AS\text{-}CE)_n$.

The second step is to calculate the present value interest factor (PVIF) based on the companies discount rate. The following equation is used to calculate the PVIF for each year of the specified time period.

Equation: $PVIF = 1/(1+r)^t$

where r = discount rate of money (i.e., current value of money to the company)

t = incremental time period (i.e., 1, 2, 3, etc.), normally expressed in years

The PVIF is calculated for each incremental time period. The PVIF always equals one, when n=0; the start-up costs. As the time period (n) increase the PVIF decreases.

The third step is to multiply the net difference in cash flows for each incremental time period determined in Step 1 one by the corresponding PVIF determined in Step 2 to calculate the present value (PV) of the money in today's dollars. The following equation is used to calculate the PV for each time period.

Equation: PV = (AS – CE) X (PVIF); at a given time period (n)

The last step is to sum the PV's for each incremental time period (0 through n) and then subtract the star-up cost (I) to obtain the net present value (NPV) of implementing the project.

A project is deemed profitable if its net present value is greater than zero. When the NPV is greater than zero a project is sufficient to (1) pay off the initial star-up costs, (2) pay off interest payments to creditors who lent the company money to pay for the start-up costs, (3) provide the required return to shareholders or a company's financial requirements, and (4) increase economic value in the company.

Net present value is a very useful indicator because it is a direct measure of a projects profitability in dollars and therefore most directly relates to a company's value of money. It does however, depend significantly on the value of the discount rate. In general, net present value is one of the strongest financial performance indicators because it has few limitations and can be used in all types of analyses.

3.5.1.3 Internal Rate of Return

The Internal Rate of Return (IRR) is another technique used in decision making. The purpose of the IRR is to determine the interest rate (r) at which NPV is equal to zero. If that rate exceeds the hurdle rate

Notes

(defined as the minimum acceptable rate of return on a project), the investment is deemed worthy of funding. The formula for IRR is:

Equation: $I + [(AS - CE)_1(PVIF)_1 + (AS - CE)_2(PVIF)_2 + ... + (AS - CE)_n(PVIF)_n] = 0$

where I = initial investment, start-up cost (expressed as a negative number)

AS = annual savings (cash inflows)

CE = capital expenses (cash outflows)

$(AS - CE)_1$ = net cash flow year 1

$(AS - CE)_2$ = net cash flow year 2

$(AS - CE)_n$ = net cash flow year n

$PVIF = 1/(1 + r)^t$ = present value interest factor

r = discount rate of money (i.e., current rate of return)

t = incremental time period, 0 thru n, normally expressed in years

In practice, IRR is usually calculated through trial and error, where different interest rates are tried until the IRR is found. Using the IRR financial performance indicator, projects are ranked according to their IRRs, and projects with IRRs in excess of the appropriate discount factor are accepted. Although, IRR and NPV methods will lead to the same accept – reject decisions for an individual project, they can give contradictory signals concerning choices between mutually exclusive projects. That is, a given project might have a higher IRR but a lower NPV than an alternative project. This problem arises because the IRR is the implied reinvestment rate (discount rate) for cash flows under the IRR method while the discount rate used in the NPV method is a company's cost of capital. If the IRR for a project is very different from the cost of capital, these differing reinvestment rates can lead to differences in project ranking. In most situations, reinvestment of cash flows at a rate close to the cost of capital is more realistic; therefore, the NPV method is generally superior.

3.5.2 Additional Economic Analysis Tools

Life Cycle Costing (LCC) tool and the Total Cost Assessment (TCA) tool are introduced below as concept overviews. Both tools can be used to establish economic criteria to justify energy conservation and pollution prevention projects. TCA is used to describe *internal* costs and savings, including environmental criteria. LCC includes all *internal* costs plus *external* costs incurred throughout the entire life cycle of a product, process, or activity.

3.5.2.1 Life-Cycle Cost Analysis

Life-cycle costing (LCC) has been used for many years by both the public and private sector. It associates economic criteria and societal (external) costs with individual energy and pollution prevention opportunities. The purpose of LCC is to quantify a series of time-varying costs for a given opportunity over an extended time horizon, and to represent these costs as a single value. These time varying cost usually include the following.

- *Capital Expenditures* - Costs for large, infrequent investments with long economic lives (e.g., new structures, major renovations and equipment replacements).
- *Non-recurring Operations and Maintenance (O&M)* - Costs reflecting items that occur on a less frequent than annual basis that are not capital expenditures (e.g., repair or replacement of parts in a solvent distillation unit).
- *Recurring O&M* - Costs for items that occur on an annual or more frequent basis (e.g., oil and hydraulic fluid changes).

Notes

- *Energy* - All energy or power generation related costs. Although energy costs can be included as a recurring O&M cost, they are usually itemized because of their economic magnitude and sensitivity to both market prices and building utilization.
- *Residual Value* - Costs reflecting the value of equipment at the end of the LCC analysis period. Considers the effects of depreciation and service improvements.

By considering all costs, a LCC analysis can quantify relationships that exist between cost categories. For example, certain types of capital improvements will reduce operations, maintenance, and energy costs while increasing the equipment's residual value at the end of the analysis period. When energy costs are broken out from recurring O&M costs, there is the potential for the application of environmental criteria, but this is generally not the focus of traditional LCC analysis.

Societal (external) costs include those resulting from health and ecological damages, such as those related to unregulated air emissions, wetland loss, or deforestation, can also be reflected in a LCC analysis either in a quantitative or qualitative manner. LCC includes the following cost components.

- *Extraction of Natural Resources* - The cost of extracting the material for use and any direct or indirect environmental cost for the process.
- *Production of Raw Materials* - All of the costs of processing the raw materials.
- *Making the Basic Components and Product* - The total cost of material fabrication and product manufacturing.
- *Internal Storage* - The cost of storage of the product before it is shipped to distributors and/or retail stores.
- *Distribution and Retail Storage* - The cost of distributing the products to retail stores including transportation costs, and the cost of retail storage before purchase by the consumer.
- *Product Use* - The cost of consumer use of the product. This could include any fuels, oils, maintenance, and repairs which must be made to the equipment.
- *Product Disposal or Recycling* - The cost of disposal or recycling of the product.

3.5.2.2 Total Cost Accounting

The total cost accounting (TCA) tool is especially interesting because it employs both economic and environmental criteria. As with the LCC analysis, the TCA study is usually focused on a particular process as it affects the bottom-line costs to the user. Environmental criteria are not explicit, i.e.; success is not measured by waste reduction or resource conservation, but by cost savings. However, since the purpose of TCA is to change accounting practices by including environmental costs, environmental goals are met through cost reductions.

Because of its focus on cost and cost effectiveness, TCA shares many of the features of LCC analysis by tracking direct costs, such as capital expenditures and O&M expenses/revenues. However, TCA also includes indirect costs, liability costs and less tangible benefits—subjects that are not customarily included in LCC analysis. A summary of costs included in TCA is presented in Exhibit 3.6. By factoring in these indirect environmental costs, TCA achieves both economic and environmental goals. Because of its private sector orientation, TCA uses Net Present Value (NPV) and Internal Rate of Return (IRR) as well as other economic comparison methods.

Notes

Exhibit 3.6: TCA Cost Categories

Direct Costs	Indirect or Hidden Costs	Liability Costs
Capital Expenditures • Buildings • Equipment • Utility connections • Equipment Installation • Engineering *Operations and Maintenance Expenses/Revenues* • Raw materials • Labor • Waste disposal • Utilities • Value of recovered materials	*Compliance Costs* • Permitting • Reporting • Monitoring • Manifesting *Insurance* *On-Site Waste Management* *Operations of On-Site Pollution Control Equipment*	*Penalties and Fines* *Personal Injury and Property Damage*

3.6 Energy Conservation and Pollution Prevention Project Examples

This section presents two energy conservation and pollution prevention projects from the fictitious manufacturing facility discussed in Chapter 2 to illustrate the technical and economic concepts presented in this chapter. They are presented in a simple format that could be used for a report. The assessment team can set up a format that suits their need or particular report style requirements. The important point in opportunity write-ups is to be consistent in format and content.

3.6.1 Adjust Air Fuel Ratio to Improve Boiler Efficiency

This example uses the total cost accounting and simple payback tools discussed above.

3.6.1.1 Current Practice and Observations

During the audit, the exhaust from the boilers was analyzed. This analysis revealed excess oxygen levels that result in unnecessary energy consumption.

3.6.1.2 Recommended Action

Many factors including environmental considerations, cleanliness, quality of fuel, etc. contribute to the efficient combustion of fuels in boilers. It is therefore necessary to carefully monitor the performance of boilers and tune the air/fuel ratio quite often. Best performance is obtained by the installation of an automatic oxygen trim system that will automatically adjust the combustion to changing conditions. With the relatively modest amounts spent last year on fuel for these boilers, the expense of a trim system on each boiler could not be justified. However, it is recommended that the portable flue gas analyzer be used in a rigorous program of weekly boiler inspection and adjustment for the boiler used in this plant.

3.6.1.3 Anticipated Savings

The optimum amount of O_2 in the flue gas of a gas-fired boiler is 2.0%, which corresponds to 10% excess air. Measurements taken from the stack on the 300 HP boiler gave a temperature of 400°F and a

Notes

percentage of oxygen at 6.2%. By controlling combustion the lean mixture could be brought to 10% excess air or an excess O_2 level of 2%. This could provide a possible fuel savings of 3%.

The 300 HP natural gas boiler is used both for production and heating. It is estimated that 100% of the natural gas is consumed in the boiler.

Therefore the total savings would be:

Savings in Fuel (therms/yr): = (% burned in boilers) x (annual therms per year) x (percent possible fuel savings)

= (1.0 x (56,787 therms/yr) x (0.02)

= 1,136 therms/yr

Savings in Dollars ($/yr): = (therms Saved/yr) x (cost/therm)

= 1,136 therms/yr x $0.644/therm

= $732/yr

3.6.1.4 Implementation

It is recommended that you purchase a portable flue gas analyzer and institute a program of monthly boiler inspection and adjustment of the boiler used in the plant. The cost of such an analyzer is about $500 and the inspection and burner adjustment could be done by the current maintenance personnel. The simple payback is:

$500 cost / $732 = 8.2 months

3.6.2 Use Less Hazardous Inks in the Screen Printing Process

This example uses the total cost accounting and will also illustrate the simple payback, net present value and internal rate of return tools discussed above. All three economic evaluation methods are presented here to demonstrate the difference results for obtained by the three methods for the same project.

3.6.2.1 Current Practice and Observations

The inks currently used in the screen printing operation contain large quantities of methyl ethyl ketone (MEK). These inks are a major source of hazardous air pollutants and hazardous waste at the facility. Approximately 60,000 gal/year of ink are purchased and used in screen printing. Clean up of ink presses and screens requires the use of an ink remover (20,000 gal/year) and paper towels (500 rolls/year).

3.6.2.2 Recommended Action

The facility should substitute less hazardous screen printing ink for the currently used inks.

3.6.2.3 Anticipated Savings

Assumptions

- The new "environmentally preferred" ink is a two-component ink, as opposed to the current ink which is a one-component formulation. Two-component ink mixing equipment is required to use the new ink. Start-up costs to purchase, install, and train staff is estimated at $75,000. Start-up costs were determined from vendor literature and price estimates from a local distributor.
- Methyl ethyl ketone (MEK) is the main solvent carrier used in the current and "environmentally preferred" ink. MEK is a listed hazardous air pollutant and is one of several reasons that Mars Screen Printing is required to have a Title V Permit, under the Clean Air Act

Notes

- A 75% reduction in solvent emissions (MEK from the ink) will be achieved by using the "environmentally preferred" ink over the current ink formulation.
- A 25% reduction in the usage of ink remover will be achieved by using the "environmentally preferred" ink over the current ink formulation.
- A 20% reduction in paper towel usage will be achieved by using the "environmentally preferred" ink over the current ink formulation.
- Current material usage and waste generation annual volumes and costs are identified in Chapter 2.
- The "environmentally preferred" ink costs an additional $0.25 per gallon to purchase in comparison to the current ink. Annual usage in gallons is anticipated to remain unchanged.
- Raw material purchase and disposal costs for ink remover and paper towels will remain unchanged from the current practice, as well as, the disposal cost for solvent emissions.

Material purchase and waste generation volume and disposal costs for the current operation were obtained from the data collection effort conducted during the assessment phase at the Mars Screen Printing company. Exhibit 3.7 summarizes the material purchase and waste generation costs directly related to the use and disposal of the current ink formulation.

Exhibit 3.7: Estimated Annual Cost of Environmentally Preferred Ink at Mars Screen Printing

Cost Element	Units Purchased	Unit Cost	Annual Cost
Raw Materials Purchased			
Ink	60,000 gal.	$2.85/gal.	$171,000
Ink Remover	15,000 gal.	$1.40/gal.	$21,000
Paper Towels	400 rolls	$1.10/roll	$440
Waste Disposal			
Ink Remover	3,750 gal.	$2.72/gal.	$10,200
Solvent Emissions	4,250 gal.	$3.00/gal.	$12,750
Paper Towels	75 lbs.	$1.00/lb.	$75
Estimated Annual Cost of New Practice =			$215,465

3.6.2.4 Payback Period

To calculate the payback period for substituting an "environmentally preferred" ink for the current ink for the current ink formulation three values must be determined: (1) the start-up cost (i.e., capital equipment purchases and installation and training costs), (2) the annual cost to operate the current practice (i.e., using the hazardous ink formulation), and (3) the estimated annual cost of the new practice (i.e., using the "environmental preferred" ink formulation).

Start-up Cost

The start-up cost to change ink formulations is identified as $75,000 in the key assumptions.

Annual Cost of Current Practice

Material purchase and waste generation volume and disposal costs for the current operation were obtained from the data collection effort conducted during the assessment phase at the Mars Screen Printing company; see Chapter 2 for additional information on data collection efforts. Exhibit 3.8 summarizes the

Notes

material purchase and waste generation costs directly related to the use and disposal of the current ink formulation.

Exhibit 3.8: Annual Cost of Current Ink Formulation at Mars Screen Printing

Cost Element	Units Purchased	Unit Cost	Annual Cost
Raw Materials Purchased			
Ink	60,000 gal.	$2.60/gal.	$156,000
Ink Remover	20,000 gal.	$1.40/gal.	$28,000
Paper Towels	500 rolls	$1.10/roll	$550
Waste Disposal			
Ink Remover	5,000 gal.	$2.72/gal.	$13,600
Solvent Emissions	17,000 gal.	$3.00/gal.	$51,000
Paper Towels	100 lbs.	$1.00/lb.	$100
Annual Cost of Current Practice =			$249,250

Estimated Annual Cost of New Practice

The key assumptions, identified above, were developed from vendor literature and price estimates from distributors. According to the post-site visit research conducted, the proposed two-component ink formulation will reduce total solvent emissions from the printing operation by 75%, as well as, reduce the amount of ink remover used by 25% per year. Paper towel usage, a secondary material in the printing process, was also estimated to be reduced by 20% from the reduction in ink remover. Although, the volume of ink required to print one square foot of surface area is the same for either type of ink, the "environmentally preferred" ink formulation costs an additional $0.25 per gallon. Exhibit 3.9 summarizes the estimated material purchase and waste generation costs directly related to the use and disposal of the "environmentally preferred" ink formulation.

Exhibit 3.9: Estimated Annual Cost of Environmentally Preferred Ink at Mars Screen Printing

Cost Element	Units Purchased	Unit Cost	Annual Cost
Raw Materials Purchased			
Ink	60,000 gal.	$2.85/gal.	$171,000
Ink Remover	15,000 gal.	$1.40/gal.	$21,000
Paper Towels	400 rolls	$1.10/roll	$440
Waste Disposal			
Ink Remover	3,750 gal.	$2.72/gal.	$10,200
Solvent Emissions	4,250 gal.	$3.00/gal.	$12,750
Paper Towels	75 lbs.	$1.00/lb.	$75
Estimated Annual Cost of New Practice =			$215,465

Payback Period Calculation

The formula for Payback Period is:

Equation: Payback period (in years) = I/(C-N)

where I = initial investment, start up costs (in dollars) = $75,000

Notes

C = annual cost of current practice (in dollars/year) = $249,000/year

N = annual cost of new practice (in dollars/year) = $215,465/year

Therefore Payback period (in years) = $75,000/($249,000/yr. - $215,465/yr.) = 2.2 years

3.6.2.5 Implementation

Implementation of this opportunity will require the purchase and installation of two–component ink mixing equipment and switch over to the new inks. The vendor for the new equipment has estimated that the equipment, installation, and training of employees will be $75,000. No modifications to the facility structure are required and labor requirements are expected to remain the same. The facility will have to make electrical and compressed air connections for the equipment and this is included in the installation costs.

The formula for Payback Period is:

Equation: Payback period (in years) = I/(C-N)

where I = initial investment, start up costs (in dollars) = $75,000

C = annual cost of current practice (in dollars/year) = $249,000/year

N = annual cost of new practice (in dollars/year) = $215,465/year

Therefore Payback period (in years) = $75,000/($249,000/yr. - $215,465/yr.) = 2.2 years

The economic evaluation for this opportunity is also presented using the Net Present Value and the Internal Rate of Return methods.

3.6.2.6 Net Present Value (NPV)

The net present value financial performance indicator looks at the profitability of a project over a specified time period, usually expressed in years, in contrast to the payback period method which only looks at the time period to recover the start-up costs. Simply, the NPV calculation takes into consideration the net difference between the annual benefit received from implementing the project in comparison to the annual cost to operate the process (including O&M cost, replacement parts, and equipment replacement based on its anticipated life-span) each year of operation over the specified time period and calculates the net present value by discounting the value of future expenses and income to today's dollars.

In order to calculate the NPV for the substitution of "environmentally preferred" ink at the Mars Printing Company additional information about the life-span and replacement cost of the current ink application equipment and the two-component ink mixing system is required. The following key assumptions will be used to illustrate the use of net present value with the Mars Screen Printing company.

- The material substitution project will be analyzed over the life-span of the two-component ink mixing system; 5 years.
- The life-span of secondary equipment (holding tanks, pumps, and propellers) used with the two-component ink mixing system is 2 years; and therefore must be replaced at a cost of $25,000.
- The current ink application system requires a complete overhaul every two years at a cost of $1,000 to replace pumps, seals, and valves.
- Over a five year period the annual savings from the project are anticipated to remain constant at $33,785 by off-setting increases and decreases in material purchase and waste disposal costs.
- Mars Screen Printing's financial advisors have determined that the value of money to the company is approximately 3%, i.e. the discount rate, therefore the project must have a return on investment of greater than 3%, which is equivalent to a net present value of zero.

Notes

The formula for NPV is:

Equation: $NPV = I + [(AS - CE)_1(PVIF)_1 + (AS - CE)_2(PVIF)_2 + ... + (AS - CE)_n(PVIF)_n]$

where I = initial investment, start-up cost (expressed as a negative number)

AS = annual savings (cash inflows)

CE = capital expenses (cash outflows)

$(AS - CE)_1$ = net cash flow year 1

$(AS - CE)_2$ = net cash flow year 2

$(AS - CE)_n$ = net cash flow year n

$PVIF = 1/(1 + r)^t$ = present value interest factor

r = discount rate of money (i.e., current rate of return)

t = incremental time period, 0 through n, normally expressed in years

A detailed explanation of how to use the equation is provided in Section 3.5.1, Common Methods of Comparing Financial Performance. Using the additional information supplied about the proposed project for Mars Screen Printing, a small cash flow spreadsheet was developed to calculate the NPV; see Exhibit 3.10.

Exhibit 3.10: NPV Calculation for Mars Screen Printing

Year	Annual Savings (cash inflows)	Capital Expenses (cash outflows)	Net Difference (net cash flow)	PVIF (DR=5%)	PV Cash Flow
0 = I	NA	- $75,000	- $75,000	1.00	- $75,000
1	$33,785	$0	$33,785	0.95	$32,176
2	$33,785	- $26,000	$7,785	0.91	$7,061
3	$33,785	$0	$33,785	0.86	$29,185
4	$33,785	- $26,000	$7,785	0.82	$6,405
5	$33,785	$0	$33,785	0.78	$26,471
Net Present Value (NPV) = Sum of "PV Cash Flows" from Year 0 to Year 5 =					$26,298

The net present value of the "environmentally friendly" ink project is estimated to be a positive $26,298 over the life of the project for Mars Screen Printing, therefore, implementing this project is anticipated to be a financially profitable endeavor.

3.6.2.7 Internal Rate of Return

The internal rate of return calculation is mathematically similar to the NPV calculation. Except, the purpose of the IRR calculation is to determine the rate of return (r), the equivalent to the discount factor which is known for the NPV calculation, and the NPV is set at zero.

In order to calculate the IRR for the substitution of "environmentally friendly" ink at the Mars Screen Printing company the same information is used as for the NPV calculation, except for the discount factor , which is unknown. The IRR equation is solved using an iterative process of trial and error to determine the internal rate of return (r). The equation used to calculate the IRR is:

Equation: $I + C_1 (1/1+r) + C_2 (1/1+r)^2 + ... + C_n (1/1+r)^n = 0$

where r = Internal Rate of Return (IRR)

I = initial cost

C_1 = net cash flow year 1

Notes

C_2 = net cash flow year 2

C_n = net cash flow year n

The first step is to develop a cash flow spread sheet, as in the NPV calculation, to determine the net cash flow. The second step is to pick an initial IRR percentage (an educated guess) and calculate the present value (PV) cash flow. The third step is to sum the PV cash flows for each time period to determine if it equals zero. The process of choosing an IRR value is repeated until the sum of the PV cash flows equals zero. Exhibit 3.11 demonstrates the iterative process to calculate the IRR for the Mars Screen Printing project.

Exhibit 3.11: IRR Calculation for Mars Screen Printing

Year	Net Difference (net cash flow)	PVIF (r = 5%)	PV (r = 5%)	PVIF (r = 20%)	PV (r = 20%)	PVIF (r = 17%)	PV (r =17%)
0	- $75,000	1.00	- $75,000	1.00	-$75,000	1.00	-$75,000
1	$33,785	0.95	$32,176	0.83	$28,154	0.85	$28,876
2	$7,785	0.91	$7,061	0.69	$5,406	0.73	$5,687
3	$33,785	0.86	$29,185	0.58	$19,552	0.62	$21,094
4	$7,785	0.82	$6,405	0.48	$3,754	0.53	$4,154
5	$33,785	0.78	$26,471	0.40	$13,577	0.46	$15,410
Sum of "PV Cash Flows" =			$26,298		-$4,556		$222

For the iterative process of calculating the IRR, a value of plus or minus $500 is normally considered acceptable. Therefore, the internal rate of return for implementing "environmentally friendly" ink at the Mars Screen Printing is calculated to be 17%. Mars Screen Printing should implement the "environmentally friendly" ink project because the actual IRR, 17%, is greater than the company's required 5% IRR on all projects.

Notes

REFERENCES

1. *Federal Facility Pollution Prevention: Tools for Compliance*; 1994, U.S. Environmental Protection Agency. Office of Research and Development, Cincinnati, OH 45268. EPA/600/R-94/154.
2. *Pollution Prevention Act of 1990*
3. *Facility Pollution Prevention Guide;* 1992, U.S. Environmental Protection Agency. Office of Research and Development, Cincinnati, OH 45268. EPA600R92088.
4. *Energy Conservation Program Guide for Industry and Commerce: NBS Handbook 115*; 1974, U.S. Department of Commerce. National Bureau of Standards, Washington DC 20402.
5. *Energy Conservation Program Guide for Industry and Commerce: NBS Handbook 115 Supplement 1*; 1974, U.S. Department of Commerce. National Bureau of Standards, Washington DC 20402.

CHAPTER 4. SOURCES OF ENERGY AND POLLUTION

Notes

Renewable energy sources account for approximately ten percent of the U.S. annual energy production. About half of this goes to generate electricity while the remaining half is used for transportation, space heating, and water heating. Much research has been done in the area of renewable energy. In 1991, the Solar Energy Research Institute located in Golden, Colorado was designated as the National Renewable Energy Laboratory demonstrating a commitment to renewable energy technology.

Non-renewable energy sources supply the majority of energy in the U.S. Nuclear power plants generate about twenty percent of electricity and Petroleum products, natural gas, and coal each supply twenty-five percent of the total energy generated in the United States.

The generation of energy more often than not results in the generation of pollution in the form of air emissions, ash, spent nuclear fuel or other wastes. Pollution is also generated from industrial, commercial, and residential facilities throughout the nation. This chapter will discuss common sources of energy and sources of pollution from industrial and commercial operations.

4.1 Electric Energy

During the 70's energy crisis, there was a drive, mainly from energy consumers, to conserve energy and reduce costs because of the skyrocketing price of oil from the Middle East. These efforts began what is today called demand-side management. DSM activities include customer load control, strategic conservation, thermal storage, heat pumps, electrification, and innovative rate programs. These activities help the utilities keep a balance between electricity supply and demand from customers.

Industry now spends more money on electricity than any other fuel source. The Assessment Team continually monitors electrical usage in manufacturing processes to ensure the greatest amount of source conservation, although electricity as compared to other production expenses appears relatively low. A large amount of dollar savings can be realized through small changes in electrical consumption practices thus producing a greater ratio between pounds of product to dollars of energy cost. Indeed, the industrial assessment may reveal instances where substitution of energy sources indicates a greater amount of energy used but lower energy costs incurred as in the case of natural gas conversions.

Cogeneration of electricity moves generative power out of the hands of regional utilities feeding massive electrical grids into the hands of the company utilizing large amounts of heat and generating an excessive amount of steam. This steam has been found to turn turbines as well as nuclear energy so instead of venting waste heat into the atmosphere, electrical power is generated and either fed into the power grid or sold directly to other consumers. Indeed, cogeneration has led to a new cottage industry - threatening to cogenerate. A cash revenue stream provided by the utility and its rate payers can provide a major incentive against cogeneration.

Providing electrical power will soon be no longer in the purview of the local or regional power. Recent Congressional legislation intends to link producers and consumers from across the country. A manufacturer in New York City will be able to buy Pacific Gas and Electric Power at a fraction of the current Consolidated Edison price. Another cottage industry will spring up in the electrical brokerage business as industrial consumers battle for the lowest price. No longer limited to large facilities, industrial manufacturers will pay third parties to scout the markets for the lowest price or purchase computer software to electronically perform the same function without the human overhead. Greater attention will have to be paid to the formerly simple utility bills as rate structures and delivery mechanisms diverge leaving the manufacturer prey to inconsistency potential heretofore unheard of. The utility assessment market will grow as will opportunities for the industrial assessors prepared for the chaos.

There are five basic ways to reduce electric costs.

1. Reduce Electrical Use.
2. Power Factor Improvements.
3. Load Factor Improvements.

Notes

4. Electricity Billing Verification.
5. Rate Structure Corrections.

Of these, only the first involves a reduction in energy consumption while the remainder detail some special situations not directly related to the quantity of electricity consumed but rather the cost of consumption.

4.1.1 Reduce Electrical Use

The detailed use of electricity will be discussed under the separate sections in this manual, but the conservation message can never be delivered too many times. Basically, electricity should be conserved, like any other source, and not wasted as in the simple but common example whereby lights or equipment consume energy during periods when rooms remain unoccupied or production lines experience downtime. Corrective action requires cognizant, conscientious employees cooperating with energy-minded management to identify areas of waste and suggest conservation practices.

4.1.1.1 Distribution System

The electrical power distribution system, from the source to utilization points, consists of electric lines of varying sizes, switches and circuit breakers designed for carrying capacity maxima, transformers and protective equipment. As related to the total consumption at any industrial plant, this system usually involves losses of 3 percent or less. Consequently, rarely does any practical savings potential in transmission systems appear to warrant investment in conservation.

The voltage in an electric circuit will drop in proportion to the circuit resistance. Resistance varies with wire size, temperature and metallic material. Thus, as conductor losses increase, the current necessary to deliver a given amount of power increases at any point in the circuit, as power derives from the product of the voltage and current. This principle applies likewise to switches, circuit breakers, and protective equipment.

The question of energy conservation possibilities should be examined in relation to the individual components in the system. In the case of the transmission lines it can be shown that doubling the conductor sizes reduces resistance losses by 75 percent. However, savings do not usually justify the expense as conductor cost in relation to the total electric investment only comes to about 10 percent. Because doubling the conductor sizes essentially doubles cost, the savings potential deserves little attention.

As previously mentioned, energy losses from switches, circuit breakers, and protective equipment also deserve minimal attention as replacement with more energy-efficient devices equalizes costs with benefits. However, in the case of defective contacts or other parts, malfunction may cause overheating and imminent failure of the part(s) causing an outage. Monitoring and inspection to diagnose abnormally high temperature operation of these items will help prevent costly power outages and subsequent downtime. Replacement with more energy efficient devices when failure occurs incrementally improves energy conservation with little or no expense over normal, less efficient practices. To sum up, the distribution system will offer few opportunities unless monitoring and replacement of parts before failure practices are observed saving on future electricity costs and preventing expensive downtime.

Transformers do represent an area of potential savings during the condition of lightly loaded equipment. Shrinking loads or incorrectly forecasted plant expansions often manifest themselves during transformer examination by the Assessment Team. Unloaded motors incur no-load losses continually, as do transformers, although newer model transformers adjust based upon loading conditions. Older transforms incur continual power losses on the basis of full-load rating, not that of the load served. The Assessment Team can investigate the possibilities of redistributing existing loads to permit scrapping of under-loaded transformers. Implementation decisions must compare of the cost of installing new connecting cables and disposal of existing equipment with power savings from the elimination of no-load transformer losses. For the case involving older transformers disposal cost should be compared with not removing the equipment, later removal and future growth of waste disposal costs, and the cost of emergency disposal if an explosion damages the transformer. Close examination of the materials within the transformers for hazardous and poisonous substances for inclusion in the energy conservation and pollution prevention write-up will help present the entire picture and consequence scenario.

Notes

4.1.1.2 Use of Electricity in the Industry

Electrical energy use, commonly found in the following systems and operations, presents significant opportunities for exploration during the industrial assessment.

- Mixing operations
- Melting and refining metallic and non-metallic materials
- Holding molten material
- Material Transportation
- Cleaning and finishing (air compressors)
- Miscellaneous assembly equipment
- Computers and other controls
- Material handling
- Packaging operations
- Environmental controls
- Lighting
- Heating, Ventilation, and Air Conditioning

4.1.2 Power Factor

Power factor quantifies the reaction of alternating current (AC) electricity to various types of electrical loads. Inductive loads, as found in motors, drives and fluorescent lamp ballasts, cause the voltage and current to shift out of phase. Electrical utilities must then supply additional power, measured in kilovolt-amps (kVA), to compensate for phase shifting. To see why, power must be examined as a combination of two individual elements.

The total power requirement constituents can be broken down into the resistive, also known as the real component, and reactive component. Useful work performance comes from the resistive component, measured in kilowatts (kW) by a wattmeter. The reactive component, measured in reactive kilovolt-amps (kVAR), represents current needed to produce the magnetic field for the operation of a motor, drive or other inductive device but performs no useful work, and does not register on measurement equipment such as the watt meter. The reactive components significantly contributes to the undesirable heating of electrical generation and transmission equipment formulating real power losses to the utility.

Power factor derives from the ratio of real, usable power (kW), to apparent power (kVAR). During the industrial assessment recommendations toward reduction of the power factor in fact indicate reduction of reactive losses. To accomplish this goal, the industrial electricity user must increase the power factor to a value as close to unity as practical for the entire facility. The supplying utility should be consulted for the determination of the requisite amount of capacitance necessary for correction to the desired power factor. For example, The number in Exhibit 4.1 is multiplied by the current demand (kW) to get the amount of capacitors (kVAR) needed to correct from the existing to the desired power factor. Mathematically, power factor is expressed as

$$PF = \frac{kW}{kVA}$$

Power factor can also be defined as the mathematical factor by which the apparent power is multiplied in order to obtain active power.

Notes

Exhibit 4.1: Components of Electrical Power

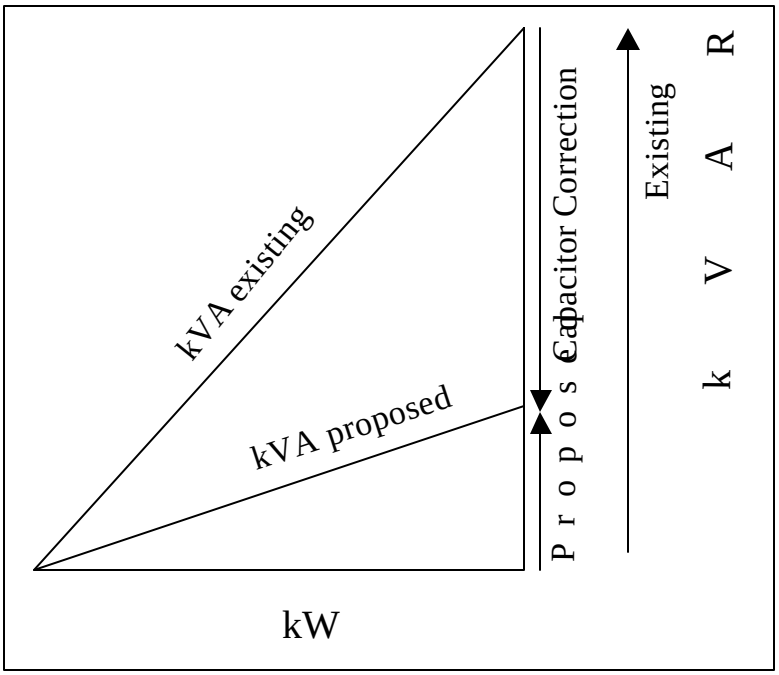

Example: Consider a 480 volt 3-phase system with an assumed load and instrument readings as follows: the ammeter indicates 200 amps and wattmeter reads 120 kW. The power factor of the load can be expressed as follows:

The apparent power for a 3-phase circuit is given by the expression

$$kVA = \frac{E \times I \times \sqrt{3}}{1000} = \frac{480\ volts \times 200\ amps \times 1.73}{1000} = 166.08\ kVA$$

Therefore:

$$PF = \frac{kW}{kVA} = \frac{120}{166.08} = 72.25\%$$

From the above example it is apparent that by the decreasing power drawn from the line (kVA) the power factor can be increased.

4.1.2.1 Power Factor Improvement

Preventive measures involve selecting high-power-factor equipment. For example, when considering lighting, only high-power factor ballasts should be used for fluorescent and high intensity discharge (HID) lighting. Power factor of so-called normal-power factor ballasts is notoriously low, on the order of 40 to 55 percent.

When induction motors are being selected, the manufacturer's motor data should be investigated to determine the motor power factor at full load. In the past few years, some motor manufacturers have introduced premium lines of high-efficiency, high-power-factor motors. In some cases, the savings on power factor alone can justify the premium prices charged for such motors. Motors should also be sized to operate as closely as possible to full load, because the power factor of an induction motor suffers severely at light loads. Power factor decreases because the inductive component of current that provides the magnetizing force, necessary for motor operation, remains virtually constant from no load to full load, but the in-phase current component that actually delivers work varies almost directly with motor loading.

Notes

Corrective measures for poor power factor involve canceling the lagging current component with current that leads the applied voltage. This cancellation can be done with power-factor-improvement capacitors, or by using synchronous motors. Capacitors have the effect of absorbing reactive current on a one-to-one basis, because almost all of the current flowing through a capacitor leads the applied voltage by 90 degrees. A capacitor rated at 100 kilovolt-amperes capacitive (kVAC) will cancel 100 kilovolt-amperes reactive (kVAR).

Synchronous motors provide an effective method of improving power factor because they can be operated at the leading power factor. Moreover, power factor of a synchronous motor to serve a load with actual power requirements of 1,000 kW, improves power factor on the load center from 80 percent to 89 percent. This improvement at the load center contributes to an improvement in overall plant power factor, thereby reducing the power factor penalty on the plant electric bill. The burden on the load center, plant distribution system, and entire electric-utility system is 400 kVA less than if an induction motor with a power factor of 85 percent were used. Power factor can be improved still more by operating the synchronous motor at the leading power factor.

Exhibit 4.2 can also be used to determine the amount of capacitors needed to correct a power factor. The amount of capacitors needed in (kVAR) can be determined from:

$$kVAR = D \times CF$$

where

D = maximum annual demand, kW

CF = correction factor

Exhibit 4.2: Power Factor Correction

EXISTING POWER FACTOR	NEW POWER FACTOR					
	1.00	0.95	0.90	0.85	0.80	0.75
0.66	1.138	0.810	0.654	0.519	0.388	0.256
0.68	1.078	0.750	0.594	0.459	0.328	0.196
0.70	1.020	0.692	0.536	0.400	0.270	0.138
0.72	0.964	0.635	0.480	0.344	0.214	0.082
0.74	0.909	0.580	0.425	0.289	0.159	0.027
0.76	0.855	0.526	0.371	0.235	0.105	
0.78	0.802	0.474	0.318	0.183	0.052	
0.80	0.750	0.421	0.266	0.130		
0.82	0.698	0.369	0.214	0.078		
0.84	0.646	0.317	0.162	0.026		
0.86	0.593	0.265	0.109			
0.88	0.540	0.211	0.055			
0.90	0.484	0.156				
0.92	0.426	0.097				
0.94	0.363	0.034				
0.96	0.292					
0.98	0.203					
0.99	0.142					

Notes

4.1.2.2 General Considerations for Power Factor Improvements

Poor power factor penalizes the user in three ways.

1. It robs the distribution system of capacity that could be used to handle the work-performing load.
2. It results in currents higher than necessary to perform a given job, thereby contributing to higher voltage drop and electrical system losses.
3. It can result in electric power billing penalties depending on the schedule terms. A plant's power factor penalty can be determined from the monthly utility bills. The method of billing for low power factor varies widely among utilities. Often no penalty is imposed unless the power factor falls below a certain minimum, typically 85 percent to 90 percent. In other situations, a penalty is involved for any reduction below 100 percent. For this reason, each rate schedule must be studied separately to determine the potential savings involved for improving power factor.

Some equipment, such as high power factor lighting ballasts or synchronous motors, has inherent power factor improvement. With other equipment, notably induction motors, power factor is a function of the mode of operation. Operation of an induction motor below full load will significantly reduce the power factor of the motor. Therefore, motors should be operated close to full load for the best power factor. Power factor also becomes progressively lower for slower speed motors. For example, the decline in power factor below 90 percent for a 1,200-rpm motor is 1.5 times greater than for an 1,800-rpm motor; for a 900-rpm motor, the decrease is more than double that for an 1,800-rpm motor.

The use of power factor improvement capacitors is the simplest and most direct method of power factor improvement. Capacitors can be bought in blocks and combined to provide the required amount of capacitive reactance or individual capacitors can be installed at each motor. Capacitors already in use should be checked annually to ensure all units are operating. Inoperative capacitors negate the power factor improvement for which their installation was intended. Diminishing returns are realized as power factor approaches 100 percent. Generally, 95 percent (based on normal full load) is the economic break-even point in a power factor improvement program; up to this point, improvements usually show a good return on investment.

4.1.3 Electrical Demand / Load Factor Improvement

The plant's load factor should be analyzed to determine the opportunity for improvement. Load factor improvement is synonymous with demand control.

Load factor is defined as the ratio of the average kilowatt load over a billing period to the peak demand. For example, if a facility consumed 800,000 kWh during a 30-day billing period and had a peak demand of 2,000 kW, the load factor is:

Load Factor = (800,000 kWh/720 hrs) / 2,000 kW = 0.55 or 55%

A high-load factor usually indicates that less opportunity exists for improvement because the load is already relatively constant.

4.1.3.1 Potential Savings

The potential savings for demand limiting depends on such factors as:

- The plant's profile (Variations in kW demand.),
- The availability of sheddable loads, and
- The rate schedule.

Together these factors determine the relative importance of the demand charge to the plant's total electric bill. Controlling demand becomes more important if the schedule includes a ratchet clause that involves payment based on the highest peak occurring in the previous 12 months.

Notes

4.1.3.2 System Analysis

The user will obtain the lowest electric cost by operating as close to a constant load as possible (load factor 100 percent). The closer a plant can approach this ideal situation, the lower the monthly demand charge will be. The key to a high-load factor and corresponding lower demand charge is to even out the peaks and valleys of energy consumption.

To analyze the opportunity for demand reduction, it is necessary to obtain data on the plant's demand profile. The demand profile is best obtained from the utility's record of the kW demand for each 15- or 30-minute interval. If no demand recording is made as a routine part of the billing procedure, the utility will usually install an instrument temporarily to provide the customer with this information. A plot of this data will show the extent of the peaks and valleys and indicate the potential for the limiting demand. If sharp peaks or an unusually high demand for one shift or short period occur, the opportunity for demand control should be investigated further. If the demand curve is relatively level, little opportunity exists for reducing demand charges by peak shaving.

In order to level out peaks in the demand profile, it is necessary to reduce loads at peak times. Consequently it is necessary to identify the various loads that could be reduced during periods of high demand. The major users of electricity will provide the most likely sources for limiting demand. Accordingly, a list of the largest users, their loads, and their operating schedules should be prepared. The smaller loads can be ignored, as they will not be able to affect the demand significantly. An examination of this list will often suggest which loads do contribute or are likely to peak demands. When the load pattern is not easily determined, a recording wattmeter can be installed at individual loads to provide a more detailed record of load variations.

4.1.3.3 Ways to Reduce Demand

Consideration of demand control often begins with automatic demand controllers. However, several other approaches should be considered first.

- *Stagger Start-Up Loads* - If a high-peak load is determined to result from the simultaneous start-up of several loads, such as might occur at the beginning of a shift, consideration can be given to staggering start-up of equipment to span two or more demand intervals.
- *Reschedule Loads* - Peak demands are usually established at particular times during the day shift. A review of the operating schedule may show individual loads can be rescheduled to other times or shifts to even out demand. This technique can provide significant gains at little or no cost. For example, operation of an electric oven might be rescheduled to the evening shift if the oven is not needed full-time. Another example is conducting routine testing of the fire pump during periods when peak demands are not likely to occur.
- *Increase Local Plant Generation* - When some electricity is generated by the plant, plant generation can be temporarily increased to limit demand. In some cases, any venting of excess low-pressure steam from the turbo-generator for short periods may represent a lesser penalty than the increased demand charge.
- *Install Automatic Demand Control* - After an investigating the above approaches, if an application for automatic demand control still appears to exist, a more detailed analysis of conditions should be made. The minimum peak demand that can be established will depend on the downtime that is acceptable without undue interference with normal operations and the available sheddable load.

To determine the extent of downtime necessary to achieve a given kW reduction, it is necessary to tabulate the size and frequency of peak demands. A sufficient number of months should be similarly studied to develop a representative profile. Seasonal or production variations may also exist although it is likely the variations in peak demands will remain relatively the same.

A suggested method of analysis is to tabulate the 10 to 20 highest peak demands occurring during a typical month in descending order, as shown in the example given in Exhibit 4.3. In this case, limiting the demand to the lowest value shown (5,990 kW) would reduce the electrical demand by 330 kW. The monthly saving based on $9.40/kW would be $3,100, or on an annual basis, $37,200.

Notes

Exhibit 4.3: Highest Demands for Hypothetical Billing Period of May

Date	Time	kW	kW Above 5990 kW
May 10	10:00a.m.	6320	330
May 24	10:30a.m.	6220	230
May 14	11:00a.m.	6145	155
May 5	1:30p.m.	6095	105
May 20	2:30p.m.	6055	65
May 15	10:30a.m.	6025	35
May 15	10:00a.m.	6010	20
May 8	2:00p.m.	6000	10
May 9	2:00p.m.	5995	5
May 13	1:30p.m.	5995	5
May 5	2:00p.m.	5990	--

To effect this reduction requires a total sheddable load of at least 330 kW. If additional sheddable loads are available, a greater reduction in peak demand can be considered. It should be noted that the task of eliminating a peak becomes progressively harder as the demand limit is set lower because the frequency of the peaks increases. For example, limiting the demand to 6,220 kW for a reduction of 100 kW from the peak demand requires shedding a total of 960 kW for 30 minutes over 10 separate occasions. In other words, in the second case it was necessary to shed a load almost three times longer for an equivalent reduction in demand. As further limiting of demand is attempted, progressively longer periods of equipment outage are required. A point is eventually reached where the interference with normal operation outweighs the benefits or no more sheddable loads are available.

To determine the sheddable loads, review the list of the larger electrical loads which have already been identified. These loads should be divided into two major categories.

1. *Essential* - Loads that are essential to maintain production or safety. Unscheduled shutdowns on these loads cannot be tolerated.
2. *Nonessential or sheddable* - Loads in this category can be shut down temporarily without significantly affecting operations or worker comfort. Examples of such loads are air conditioning, exhaust and intake fans, chillers and compressors, water heaters, and battery charges. Electric water heaters represent a load that can usually be shed.

The practical extent of peak shaving can now be determined based on the schedule of sheddable loads and the pattern of peak demands. The number and type of loads to be controlled will determine the type of demand controller needed. Automatic demand controllers are offered in a wide range of prices from several thousand dollars to tens of thousands of dollars. For different applications, the more sophisticated controllers may be necessary. For normal demand control, the less expensive controllers will be more than adequate.

Annual savings can be calculated and compared to the costs of installing a demand control system. As part of the installation, demand controllers will require a pulse signal from the utility to synchronize the utility's demand interval with the demand controller's.

4.1.4 Reading the Bill

The cost of purchasing electrical power from utility companies is derived from four major factors; energy charge, fuel-adjustment charge, demand charge, and low power factor penalty.

Other incidental items which will affect the power charges are character of service, service voltage, and equipment charges. These are fixed charges.

Notes

4.1.4.1 Example of a Typical Electric Bill

1. The utility rate schedule A-7 is the key to analyzing the electric bill. It is normally included as part of the contract.

2. The energy used expressed in kilowatt-hours (kWh) is determined by the difference of two monthly meter readings times the billing constant (2A). The billing constants (2A) and (3A) are also described as "Meter Multipliers". They are determined by the product of the current and potential transformer ratios installed at the particular location.

3. The reactive power used, sometimes called "wattless power", expressed reactive kilowatt ampere hours (kVARh) is determined from a separate reactive meter similar to the kWh meter (2) above.

4. The maximum demand in kilowatts for the current month is read from a separate register on the kWh meter. The value is the largest quantity of kilowatts consumed during a time interval prescribed in the contract.

Exhibit 4.4: Example Electric Bill

Billing Demand: 3840 (6)

Billing Constants: kWh (2A) 12000; kVARh (3A) 12000

Kilowatt-Hour Meter

Service From		Service To		Readings From	Readings To	kWh
05	24 (7)	06	25	1352	1415	756,000 (2)

Reactive- Hour Meter

Service From		Service To		Readings From	Readings To	kVARh
05	24 (7)	06	25	0941	0981	480,000 (3)

Total kWh 756,000 Year 1979 Total kVARh 480,000

Maximum Demand: 3840 (4)

Reactive Demand: 2438 (5)

Rate Schedule A-7 (1)

(9) Inclu. Sstate Tax @ 1 Cent/100 kWh

Demand Customer or Service Charge: $3,615.70 (8)

Energy Charge: $29,010.33

Gross Bill: (10) $32,626.03

Voltage Discount: $706.77 Cr (11)

Power Factor Adjustment: $266.38 Cr (12)

Net Bill: (13) $31,652.88

Service Address

Previous Balance

Deposit Refund

Amount Due: $31,652.88 (14)

5. The reactive demand in kVAR is calculated from the formula kVAR - kW (kVARh/kWh).

6. The billing demand is the average of the maximum demand for the past 11 months and the current month's demand. The minimum is half of the past 11-month value.

7. Date and time span of the current billing.

8. The service charge, as specified in the rate schedule, is based on the billing demand item 6 and the service charge, is also used as the minimum billing if the energy usage falls to a low value.

9. The electrical energy charge is based on the kilowatt hours used as shown in item (2). Certain adjustments are made to the energy charge determined from the meter readings as follows:

   a) Energy cost adjustment known as "ECAC" varies with the change in fuel cost to the utility.

Notes

b) Fuel balance factor is usually a credit.

c) Load management factor.

d) State tax as indicated on the mo nthly bill.

10. The gross bill is the summation of items (8) and (9).
11. The voltage discount is available for services that are metered on the high voltage or primary side of the power company transformer. This discount is made to compensate for the utility transformer losses which are now included in item (2).
12. The power factor adjustment may be a penalty or a discount depending on the amount of reactive power, item (3), required by a plant. Power factor is defined as the ratio of the kW to kVA, sometimes stated as the ratio of "real power to the apparent power". This value is not read directly from the utility meters but must be calculated. A simpler method, using a hand calculator, is to solve as a right angle triangle where power factor (PF) is:

$$PF = \frac{kW}{kVA} = \frac{kWh}{RkVAh}$$

$$RkVAh = (kWh)^2 + (RkVAh)^2$$

$$PF = \frac{756{,}000}{(756{,}000)^2 + (480{,}000)^2} = 0.849$$

%PF = 100 x 0.849 = 85.9% Power Factor

On this rate schedule a power factor over 70.7% provides a credit; below a penalty, however, other utilities may use a different break even point - 85% is used by many.

13. City taxes where applicable.
14. Net bill is the summation of all of the above charges, adjustments and credits.

4.1.5 The Energy Charge

Energy charge is based on the number of kilowatt hours (kWh) used during the billing cycle. The total kilowatt hours are multiplied by the energy charge for total energy billing. The energy charges can vary with the type of service, voltage, and energy consumption. Example energy rate schedules are as follows:

Example 1: General service schedule is applied to electrical load demand of up to 8,000 (kWh) kilowatt hours per month. Thus a non-demand charge schedule, the cost of energy and demand are one charge.

Example 2: Rate schedule A-12 is applied to electrical load demand of 30 to 1,000 kilowatt of demand per month. This schedule has an energy charge, fuel-adjustment charge, demand charge, and low power factor penalty.

Example 3: Rate schedule A-22 is applied to electrical load demands of 1,000 to 4,000 kilowatt of demand per month. This schedule has an energy charge, fuel-adjustment charge, demand charge, and low power factor penalty. The rate schedule has a "time of day" billing rate for energy and demand for both summer and winter. The summertime hour periods are from May 1 to September 30; the energy and demand charges change between the following hours:

Partial peak hours - 8:30 am to 12:30 pm = 4 hours

Peak hours - 12:30 pm to 6:30 pm = 6 hours

Partial peak hours - 6:30 pm to 10:30 pm = 4 hours

Off peak hours - 10:30 pm to 8:30 am = 10 hours

Notes

The wintertime hour periods are from October 1 to April 30; the energy demand charges change between the following hours:

Partial peak hours - 8:30 am to 4:30 pm = 8 hours

Peak hours - 4:30 pm to 8:30 pm = 4 hours

Partial peak hours - 8:30 pm to 10:30 pm = 2 hours

Off peak hours - 10:30 pm to 8:30 am = 10 hours

Example 4: Rate schedule A-23 is applied to electrical load demands of 4,000 and above 5 kilowatts (kW) of demand per month. All other charges and "time of day" billing hours and periods are the same as rate schedule A-22. Additional rates are available for the purchase of supply voltage of 4,500 or 12,000 volts, this schedule provides for a high voltage discount of the total energy and demand charges.

4.1.6 The Demand Charge

This charge compensates the utility company for the capital investment required to serve peak loads, even if that peak load is only used for a few hours per week or month. The demand is measured in kilowatts (kW) or kilovolt amperes (kVA). These units are directly related to the amount of energy consumed in a given time interval of the billing period. The demand periods vary with the type of energy demand; the high fluctuating demand has a short demand period, which can be as short as five minutes, but generally demand periods are of 15 or 30 minutes. The period with the highest demand is the one used for billing demand charges.

Example: If the demand for a plant is 70 kilowatts for the first 15-minute period and for the next 15-minute period the demand increases to 140 kilowatts and then drops back to 70 kilowatts for the remainder of the billing period (one month), the billing demand for that month is then 140 kilowatts. This represents the interval of maximum energy demand from the utility company for the month.

Demand charges can be a significant portion of the total electric bill; in some cases, demand charges can amount to as much as 80 percent of the bill. The demand charge can be reduced by smoothing out the peaks in energy demand by rescheduling of work or through a demand control program to shed loads when a demand limit is approached. This concept is particularly important for plants using electricity for major processes such as melting.

4.1.7 Power Demand Controls

The power demand controller automatically regulates or limits operation in order to prevent set maximum demands from being exceeded. The role of such a power demand controller has been widely recognized, the "time of day" billing rates will make it far more necessary in the future. The type of controller best suited for a plant operation is that which will predetermine the demand limit and the demand interval.

The overall usage of power is constantly monitored from the power company meter, the power usage of all the controlled loads is also monitored. By having this information the controller can calculate when an overrun of the desired demand limit will occur. The controller will delay any shed action to allow time for loads to shed normally. When it is determined that it will be necessary to shed one or more loads to keep from exceeding the demand, the controller, at the last possible moment, will shed the necessary loads. This means that shedding will occur only once during a demand interval and maximum use of available power will be realized.

4.1.8 Demand Shifting

Due to the lack of availability and the increased cost of natural gas and petroleum products, industry has come to rely on electrical power as a major source of energy. The use of electrical energy has increased at a greater rate than was anticipated and therefore a critical shortage has also been created in some areas.

Notes

This is particularly true during the normal working day hours. Over the past few years this condition has caused situations known as "brown-outs", which is controlled curtailment of power.

Even with power companies doing their best to cope with the problem by building new generating stations, installing additional equipment in existing facilities, and operating all equipment at maximum capacity, they still have not been able, in some cases, to keep up with the rapid growth in the demand for electrical energy.

The demand for electrical energy is not constant, but occurs in peaks and valleys. Power companies are obligated to have enough equipment available to meet a customer's peak demand, even though this equipment is only used during the peak periods and is not in use during most of the working day. In order to finance the equipment necessary to provide this peak demand service for industrial users, the power demand charge was created. In some localities this high demand rate is the rate, which is paid for the next year, even if it is never reached again, and the price paid for power demand can be very high.

With peaks and valleys in electrical demand caused by electrical melting during the normal work day, maximum demand peaks should be controlled by sequencing the furnace's operation and maximum power input to each furnace. By applying this procedure, the revised operation would level out the peak demands and produce a flat demand profile during normal daytime melting. With this melting operation the "load factor" would be improved, thus preventing high maximum demand peaks, which are developed through operating all machines at full load at the same time.

4.2 Fossil Fuels

Fossil fuels including petroleum products and coal supply about sixty percent of the U.S. energy requirements. Petroleum products and coal are used in industrial boilers and power generation stations to produce steam for manufacturing and electric generators. Domestic petroleum production is on a steady decline while the U.S. has the largest coal reserves in the world. About ninety percent of domestic coal is used for electricity generation.

Natural gas supplies a fourth of the U.S. energy needs. Natural gas use is expected to grow in the next twenty years with most of this consumption met by domestic supplies. Natural gas is used in a variety of operations such as steam generation, space heating, and cooking.

Fossil fuel generation and use creates a variety of wastes. The gaseous and particulate byproducts of fossil fuel combustion include carbon dioxide, carbon monoxide, and nitrogen and sulfur oxides. The processes used to treat the gases create other wastes. Water used in generating energy from fossil fuels is contaminated with the chemicals used to control scale and corrosion. Before discharge, the water must be treated to remove these contaminates. Burning fossil fuels creates solid waste in the form of ash and slag. In addition, the treatment of waste gases and water causes the formation of solid waste.

4.2.1 Energy Conservation Measures for Fossil Fuels

In many ways energy conservation for fossil fuel usage is much less complicated and has a more directly visible impact on the environment. Conservation opportunities can range from the very simple opportunities like repairing steam leaks to more complex equipment replace projects. Common energy conservation opportunities for fossil fuel using operations are included below.

- *Monitor Air/Fuel Ratio* - Monitoring the air/fuel ratio for boilers and other similar equipment to ensure the optimum mixture will allow more efficient use of fossil fuels and reduce usage.
- *Insulate Steam Pipes* - Insulation of steam pipes will keep steam at the needed temperature allowing the steam pressure to be lowered thus minimizing the energy needed to generate the steam.
- *Repair Steam Leaks* – Repair of steam leaks to minimize unnecessary steam loss will reduce the quantity of fuel used to generate steam
- *Preheat Combustion Air with Waste Process Heat* – Use of waste process heat to preheat combustion air for furnaces requires less fuel to heat the air to the needed temperature.

Notes

4.3 Alternative Energy Sources

Renewable energy sources account for approximately eight percent of the U.S. annual energy production. About half of this goes to generate electricity while the remaining half is used for transportation, space heating, and water heating.

Hydroelectric power generation comprises the largest percentage of the renewable energy category at more than fifty percent. Hydropower generation is used primarily for generation of electricity. Electricity generated from hydroelectric plants has increased as a result of increased water availability and improved efficiency.

Solar energy comprises about one percent of the renewable energy. Solar energy is used in three processes; heliothermal, heliochemical, and helioelectrical. Heliothermal is the absorption of the sun's radiation to produce heat for processes such as water heating. Applications of heliothermal processes are called active solar systems. Heliochemical solar energy is when the sun's radiation causes chemical reactions like photosynthesis. Helioelectrical is the conversion of the sun's radiation into electrical energy. Application of helioelectrical processes is usually termed photovoltaic systems. Solar energy can be accumulated in a number of solar collectors, which vary according to application. Solar energy has cost constrains, but recently there has been a resurgence in interest in solar energy, especially with environmental concerns.

Wind has been used for centuries as a power source to turn windmills for grinding grains and pumping water. Due to the variability of wind, generation of electricity using wind turbines is fairly expensive, the more wind the cheaper electricity generation. Energy generated from wind comprises less that half a percent of renewable energy. The use of wind turbines is limited to those areas with a more constant supply of wind.

Geothermal energy generation, approximately five percent of renewable energy generation, is limited to certain areas of the world where there are geysers, hot springs, or access to the earth’s internal thermal energy. Geothermal sources which are rich in hot water and steam from these sources is used to power low pressure turbines to generate electricity either directly or through a binary process. The "direct process" is to use the heated water and steam directly to power turbines while the "binary process" is to use a secondary fluid such as freon to power the turbine.

Biomass fuels include a wide variety of materials such as wood, peat, wood charcoal, bagasse, biogas, and liquid fuels produced by biological processes. Biomass fuels are the second largest source of renewable energy generation at about forty-one percent. Wood materials are usually burned in fireplaces and boilers to produce heat with little preprocessing. Wood charcoal is wood, which has been heated to remove most of the moisture resulting in a higher BTU value. Peat is a material in the early stages of transformation to coal and is generally low in sulfur, nitrogen, and ash. Peat, before harvesting, is greater than 90 percent water so drying is necessary before use. Bagasse is a fibrous residue material from sugarcane processing and is burned in boilers like wood. Biogas is generated from anaerobic digestion of waste materials. This gas is a useful source of energy and the remaining sludge materials are used for fertilizer. Much research has been done on waste to ethanol processes. These are biological processes that are used to generate liquid fuels. The waste to ethanol process is not yet economically competitive with current energy sources and is not commercially practiced.

Municipal solid waste incinerators have increased in popularity over the past few years. Heightened interest is a result of the closing of many landfills and the increasing capacity requirements for waste disposal. There are hundreds of municipal solid waste incinerators in the U.S.

4.4 Pollution Prevention and Waste Generation

All of the above energy sources impact the environment either through emissions of pollution causing materials, flooding of areas by hydroelectric dams, mining, or drilling. The U.S. has reduced energy related air pollution through regulations requiring better emission control and cleaner fuels. In addition, other wastes and pollution generated as the result of energy generation such as ash from the burning of solid waste and other materials is also regulated. As these regulations become more stringent, pollution prevention and waste generation from energy generating operations will be critical.

Notes

4.4.1 Regulatory Requirements

Over the past three decades, the generation of wastes that are released to the environment through any media have become more stringently regulated. Environmental compliance and waste management costs increase in proportion to the number, volume, and complexity of a facility's waste streams. Simply stated, the less waste a facility generates the lower the treatment and disposal costs; not generating wastes is the wisest approach to waste management. This section gives an overview of major environmental requirements the Assessment Team should refer to the Code of Federal Regulations or the U.S. EPA web site for specific information on these regulations.

4.4.1.1 Air Emissions

The 1990 amendments to the CAA significantly affect facilities in several ways. Facilities located in nonattainment areas may be subject to more stringent emission levels on existing permitted sources such as painting/degreasing operations, power plants, or incinerators, and new regulations on many small sources that were not regulated previously such as print shops, dry cleaning operations, and gasoline stations. The air toxics provisions are likely to mandate new or additional control equipment for new and existing sources. The list of air toxics to be regulated has grown beyond the original list of seven, to a new list of 189 substances. The expanded list of air toxics, coupled with the new provisions to reduce emissions in nonattainment areas nation wide, means that many small sources typically found at facilities must now have permits.

Sources of air emissions in industrial facilities include but are not limited to cleaning and degreasing operations, painting or paint removal processes, heaters, furnaces, boilers, and printing. These operations are common in many types of facilities. Control technologies are available to help reduce the release of regulated emissions from many of these sources. For example, technologies available to reduce emissions from boilers include low NOx burners and flue gas recirculation. In addition, many facilities have changed the types of fuels that are used for boilers and furnaces to low sulfur fuels. For instance, conversion of boiler burners from Fuel Oil No. 4 to Fuel Oil No. 2 would significantly reduce emissions.

4.4.1.2 Water Discharges

The primary regulation for wastewater management is the National Pollutant Discharge Elimination System (NPDES), developed in accordance with the Clean Water Act. The CWA requires NPDES permits for the discharge of pollutants from any point source into waters of the United States. Permits are required for industrial facilities as well as facilities treating domestic wastewater. NPDES permits typically contain limits on the quantities of specific pollutants that can be discharged from the facility. The NPDES permit system encourages facilities to restrict their usage of regulated substances in order to comply with the discharge limits.

EPA has established 34 NPDES Primary Industry Categories. Any permit issued to a facility included in one of these categories contains specific effluent limitations and a compliance and sampling schedule to meet the limitations. Technology-based treatment limits form the basis of most effluent limitations.

The pretreatment program sets standards for the control of industrial wastewater discharged to publicly-owned treatment works (POTWs). The goal of the pretreatment program is to protect human health and the environment by reducing the potential harmful substances from entering POTWs.

Point source discharges are those that originate from a specific location such as an outlet pipe or open channel that carries wastewater from sewage treatment or industrial process plants. Typically, all point source discharges are required to have NPDES permits that specify the maximum quantity of toxins allowed to be released. Point sources at facilities include photo labs, medical clinics, cafeterias, and electroplating operations. Non-point source discharges are from operations such as agriculture, golf courses, and forest operations.

4.4.1.3 Solid Waste

Municipal solid wastes, in general terms, include all items that are discarded and are, or could be, taken to a sanitary landfill. According to an EPA report, the average office worker individually contributes more than 100 pounds of high quality paper to landfills every year. Paper and paperboard products were the

Notes

largest components of municipal solid wastes by weight (37 percent) and volume (about 32 percent), totaling nearly 66.5 million metric tons in 1990. Construction and demolition debris wastes accounts for more 25 percent of all municipal solid waste in the United States. The majority of these wastes are landfilled

Many State and local regulations prohibit the disposal of specific wastes at sanitary landfills. Wisconsin, for instance, bans tires and used oil. The Assessment Team should refer to State or local regulations for the most up-to-date landfill regulations.

Apart from regulatory incentives, the greatest incentive for applying pollution prevention to municipal solid wastes is the cost savings from reduced disposal fees. In addition, recycling programs may generate a small profit depending on local market conditions and the volume generated.

4.4.1.4 Hazardous Waste

The hazardous waste regulations promulgated to implement RCRA and the Comprehensive Environmental Response Compensation and Liability Act (CERCLA) specify requirements for the identification, storage, treatment, and disposal of hazardous waste. RCRA offers facilities four incentives for pollution prevention.

1. Under the cradle to grave liability provisions, generators remain legally and financially responsible for any environmental damage from their wastes from generation to disposal. In fact, generators remain responsible for their wastes even after they have been disposed of (e.g., at a landfill).
2. As a result, hazardous waste management, treatment, and disposal costs have risen dramatically, giving waste generators a financial incentive to produce the least amount of waste possible.
3. RCRA requires hazardous waste generators to certify that they have waste minimization programs in place whenever they sign off on a manifest.
4. Generators are asked to voluntarily report their waste minimization achievements on the waste minimization form of the Biennial Report, which they are required to file under 40 CFR § 262.41.

Sources of hazardous waste in industrial operations are abundant. An extensive list of these operations is given in Exhibit 4.5. Pollution prevention opportunities for reduction of hazardous waste can be as simple as better housekeeping or complex process or product modifications. Suggestions for common pollution prevention opportunities are listed in the following sections.

4.4.1.5 Record Keeping

Industrial facilities are required to keep records to document hazardous waste generation, air emissions, and water discharges. In some cases facilities are required to do regular monitoring of emissions or discharges. Records for hazardous waste disposal are required by law to allow tracking of individual substances according to the needs, should they arise. The record of movement of all hazardous substances through the plant, from one manufacturing cell to another, or simply as a material flow, is a very useful tool. It is always in the company's interest to deal with the issue of hazardous waste according to all the regulations. The penalties for noncompliance are high, and in serious cases could even cause shutdown of the operation. In the beginning of this manual it is emphasized that the industrial assessments are not compliance audit and this holds true. But it is to the benefit of the company to be informed of the consequences of noncompliance and the Assessment Team's job to help in solving problems related to waste and hazardous waste in particular.

4.4.2 Sources of Manufacturing Wastes

Almost any operation will generate some type of waste or release pollutants to the environment. Even a non-industrial type of a business will have a waste in terms of paper, cardboard, etc. If the waste is landfilled, it is rather obvious that the space available is limited. If the waste is incinerated, a secondary waste whether in the form of unwanted, though more acceptable, substances or at least heat is created. Waste generators need to concentrate on source reduction, if that is not possible, recycling is the second choice, and as the last resort, treatment of waste that will reduce the toxicity of the waste.

Notes

4.4.2.1 Processes Generating Wastes and Types of Wastes Generated

In order to be able to deal successfully with any waste issues, the Assessment Team has to know what usually constitutes waste and where and how it is generated. Nothing can be as valuable as personal experience but even an inexperienced person performing the assessment can get a good idea from the following list of waste materials for various operations.

• Raw Materials	Containers, packing	Spoiled batches
	Off-spec and expired lots	
• Processes	Cleaning	Coating/Painting
	Reactions	Planting/Anodizing/Chromating
	Machining	Casting/Molding
	Testing	Extracting/Refining
	Printing	Packaging
• Cleaning	Alkaline baths	Acidic baths
	Solvents	Rags
	Sludges	Oil and Grease
	Grit	Rinse water
• Painting	Thinner	Paint sludge
	Overspray	Filters
	Containers	Unused paint
	Paint stripper	Masking
• Machining	Metal chips	Trimming waste
	Cutting coolants	Tapping oil
	Hydraulic oil	Tramp oil
	Filters	Rags
• Printing	Lithographic plates	Plate process solutions
	Silver	Photo process solution
	Press washes	Rags
	Paper	Inks

4.4.2.2 Industry Compendium of Processes Producing Waste

Processes that generate wastes can be categorized by the standard industrial classification (SIC) code for easy of reference as shown in Exhibit 4.5. These processes are not limited to the industrial operations classified into the given classification code but can be part of processes in other industrial facilities. The assessment team should be aware that the opportunities listed may be applied to industrial operations in other SIC codes.

Exhibit 4.5: Compendium of Processes Producing Waste

General Industrial Category	Unit Operation	Common Waste Streams	Pollution Prevention Measures
Chemical processing (SIC: 28,29)	• Blending/mixing • Reaction to form product • Vessel cleaning	• Tank clean-out solutions • Tank clean-out solids • Reagent (liquid and powder) spills to floor • Reaction by products • Air emissions- Dust from powdered raw material	• Use Teflon lined tanks • Clean lines with "Pigs" instead of solvents or aqueous solutions • Use squeegees to recover clinging product prior to rinsing • Use Clean In Place (CIP) systems • Clean equipment immediately after use • Treat and reuse equipment cleaning solutions • Use cylindrical tanks with height to diameter ratios close to one to reduce wetted surface • Use tanks with a conical bottom outlet section to reduce waste associated with the interface of two liquids • Increase use of automation • Convert from batch operation to continuous processing • Use dry cleaning methods whenever possible • Use squeegees, mops and vacuums for floor cleaning • Use pumps and piping to decrease the frequency of spillage during material transfer • Install dedicated mixing equipment to optimize re-use of used rinse and to preclude the need for inter-run cleaning • Use in process recycling whenever possible • Install floating covers on tanks of volatile materials to reduce evaporation • Order paint pigments in paste form instead of dry powder to eliminate hazardous dust waste
Food processing (SIC: 20)	• Mixing/blending • Cooking/baking	• Equipment cleaning waste waters • Floor washing waste waters • Solid materials from mixer cleaning (e.g. dough) • Spent cooking oils	• Use dry cleaning methods whenever possible • Use high pressure washing equipment • Use squeegees and mops and for floor cleaning • Use continuous processing to eliminate the need for inter-run cleaning

Exhibit 4.5: Compendium of Processes Producing Waste (cont.)

General Industrial Category	Unit Operation	Common Waste Streams	Pollution Prevention Measures
Metal working (SIC: 33-39)	• Melting	• Air emissions • Hazardous slag • Non-hazardous slag • Metal dust • Scrubber sludge	• Recycle non ferrous dust • Alter raw materials to reduce air emissions • Use induction furnaces instead of electric arc r cupola furnaces to reduce dust and fumes • Reuse high ferrous metal dust as raw material • Use high quality scrap (low sulfur) to reduce hazardous sludge generation • Use an alternative desulfurizing agent to eliminate hazardous slag formation • Alter Product Requirements to eliminate unnecessary use of desulfurizing agent (calcium carbide) • Separate iron from slag and remelt • Treat disulfurization slag in a deep quench tank in-stead of spraying water onto an open pile to reduce air emissions
	• Casting	• Spent sand • Flashing • Reject castings	• Recycle casting sand • Use sand for other purposes (e.g. construction fill, cover for municipal landfills) • Avoid contamination of flashing and reject castings and reuse as feed stock • Recover metals from casting sand
	• Extrusion	• Scrap end pieces	• Avoid contamination of end pieces and reuse as feed stock
	• Cold working (bending, pulling)	• Scrap metal	• Recycle scrap metal to foundry
	• Machining (cut-ting, lathing, drilling, tapping)	• Metal scrap • Spent hydraulic oils • Spent lubricating oils • Leaked oils • Dirty rags or towels	• Segregate metals for sale to a recycler • Reprocess spent oils on site for reuse • Install shrouding on machines to prevent splashing of metal working fluids • Utilize a central coolant system for cleaning and re-use of metal working fluid • Maintain machines with a regular maintenance pro-gram to prevent oil leaks • Implement a machine and coolant sump cleaning program to minimize coolant contamination
	• Grinding	• Metal and abrasive dust	• Separate (flotation, magnetic) and recycle scrap to foundry
	• Heat treatment	• Air emissions	• Improve furnace control

Exhibit 4.5: Compendium of Processes Producing Waste (cont.)

General Industrial Category	Unit Operation	Common Waste Streams	Pollution Prevention Measures
Printing (lithography, gravure, flexography, letterpress, screen) (SIC: 27)	• Image production	• Scrap film • Spent film processing solutions	• Use glass marbles to raise fluid levels of chemicals to the brim to reduce contact with atmospheric oxygen • Recycle film for silver recovery • Use electronic imaging and laser plate making • Use water-based image processing chemicals • Closely monitor chemical additions to increase bath life • Use squeegees to prevent chemical carry-over in manual processing operations • Use counter current washing in photo processors • Recycle processing baths for nickel recovery • Use silver free films • Use "washless" processing equipment
	• Plate, cylinder and screen making	• Spent plate processing solutions	• Use water-based developers and finishers • Use an automatic plate processor • Use counter-current rinsing to reduce rinse water volume (gravure) • Use drag-out reduction methods (gravure)-see surface coating • Sell used plates to an aluminum recycler
	• Make-ready	• Scrap paper • VOC emissions	• Automate ink key setting system • Reuse scrap printed paper for make-ready • Use ink water ratio sensor • Computerized registration • Use automated plate benders
	• Printing	• Scrap paper • VOC emissions • Damaged rubber blankets • Waste ink • Waste printing press oils	• Install web break detectors to prevent excessive waste paper • Eliminate chemical etching and plating by using alternative printing technologies (Presensitized lithographic, plastic or photopolymer, hot metal, or • flexographic) • Use a waterless plating system • Use automatic ink levelers • Schedule jobs to minimize the need for cleanup (light colors before dark) • Use dedicated presses for each color • Use less toxic solvents • Use soy or water-based inks • Automate ink mixing • Cover ink containers when not in use

Exhibit 4.5: Compendium of Processes Producing Waste (cont.)

General Industrial Category	Unit Operation	Common Waste Streams	Pollution Prevention Measures
Printing (lithography, gravure, flexography, letterpress, screen) (SIC: 27) continued	• Clean-up	• VOC emissions • Left over ink from fountains • Waste roller cleaning solution • Dirty rags • Paint skin from open ink containers • Used plates	• Use press cleanup rags as long as possible before • disregarding • Recycle waste ink and cleanup solvent • Use automatic cleaning equipment • Remove rollers from the machines and clean in a closed solvent cleaner • Prevent excessive solvent usage during cleaning (operator training) • Segregate spent solvents (by color) and reuse in sub-sequent washings • Improve cleaning efficiency by maintaining cleaning system (rollers, cleanup blade)
Surface coating (SIC: 24, 25, 34-39)	• Painting	• Off-specification or out-dated paint • Empty paint and solvent containers • Paint sludge • Spent paint filters • Booth clean-out waste (overspray) • Spent cleaning sol-vent • VOC emissions	• Use tight fitting lids on material containers to reduce • VOC emission • Convert to higher efficiency technologies • Convert to electrostatic powder coating • Convert from water curtain spray booths to a dry system • Convert to robotic painting • Use low VOC or water based paint • Purchase high volume materials in returnable bulk containers • Train operators for maximum operating efficiency • Automate paint mixing
	• Painting continued	•	• Use compressed air blowout for line cleaning prior to solvent cleaning • Shorten paint lines as much as possible to reduce line cleaning waste • Schedule production runs to minimize color changes • Recycle cleaning solvent and reuse • Use paint without metal pigments
	• Plating (electro electroless-) • Anodizing	• Spent alkaline cleaning solutions • Spent acid baths • Spent cyanide cleaning solutions • Spent plating solutions • Filter sludge • Waste rinse water • Waste water treatment sludge • Vent scrubber waste	• Use high purity anodes to increase solution life • Lower the concentration of plating baths • Reduce drag-in with better rinsing to increase solution life • Use deionized water for make-up and rinse water to increased solution life • Extend solution life with filtering or carbonate freezing • Use cyanide free solutions whenever possible • Replace cadmium-based solutions with zinc solutions • Replace hexavalent chromium solutions with trivalent solutions • Return spent solutions to the manufacturer • Use lower concentration plating baths • Reduce drag-out by racking parts for maximum drainage • Reduce drag-out by slowing withdrawal speed and increasing drain time • Rack parts for maximum drainage • Use drain boards between tanks for solution recovery

Exhibit 4.5: Compendium of Processes Producing Waste (cont.)

General Industrial Category	Unit Operation	Common Waste Streams	Pollution Prevention Measures
Surface coating (SIC: 24, 25, 34-39) (cont.)			• Reduce water use with counter current rinsing • Use fog nozzles over plating tanks and spray rinsing instead of immersion rinsing • Use reactive rinsing • Mechanically and air agitate rinse tanks for complete mixing • Use a still rise as the initial rinsing stage • Use automatic flow control • Recovery metals from rinse water (Evap., Ion ex-change, R.O., Electrolysis, Electrodialysis) and reuse rinse water • Use precipitating agents in waste water treatment to reduce waste generation • Use separate treatments for each type of solution and sell sludge to a recycler
Surface Stripping (SIC: 24, 25, 34-39)	• Stripping of paint, varnish, lacquer	• Spent solvents • VOC emissions • Spent caustic solutions • Spent sand and other blasting media • Paint dust	• Use mechanical stripping methods • Use cryogenic stripping • Use non-phenolic strippers to reduce toxicity associated with phenol and acid additives • Maintain clean conditions before painting to avoid surface contamination resulting in paint defects
	• Metal plating removal	• Spent acid solution • Tank sludge	• Recover metals from spent solutions and recycle
Surface preparation/ cleaning (SIC: 24, 25, 34-39)	• Chemical etching • Solvent cleaning (vapor degreasing, solvent dip)	• Spent acidic solution • Tank sludge • Waste rinse water • Spent solvents • Solvent recycle still bottoms • VOC emission • Solvent tank sludge	• Reduce solution drag-out from process tanks • Prevent solution drag-out from upstream tanks • Use deionized water in upstream rinse tanks • Treat and reuse rinse waters • Recover and reuse spent acid baths • Use tight-fitting lids on material containers and sol-vent cleaning tanks to reduce VOC emissions • Convert to aqueous cleaning system • Convert to less toxic hydrocarbon cleaners • Use peel coatings on raw materials to eliminate need for cleaning • Use water-based cutting fluids during machining to eliminate need for solvent cleaning • Increase freeboard space and install chillers on vapor degreasers • Distill contaminated solvents for reuse • Remove sludge from tanks on a regular basis • Slow insertion and withdrawal of parts from vapor degreasing tank to prevent vapor drag-out • Maintain water separator and completely dry parts to avoid water contamination of solvent • Convert to aqueous cleaning

Exhibit 4.5: Compendium of Processes Producing Waste (cont.)

General Industrial Category	Unit Operation	Common Waste Streams	Pollution Prevention Measures
Surface preparation/ cleaning (SIC: 24, 25, 34-39) continued			• Use silhouette entry covers to reduce evaporation area • Avoid inserting oversized object to reduce piston effect • Allow drainage before withdrawing object • Eliminate the need for cleaning with improved handling practices
	• Aqueous cleaning	• Spent cleaning solutions • Waste rinse waters • Oil sludge • Tank sludge	• Remove sludge from tanks on a regular basis • Minimize part contamination before washing • Eliminate the need for cleaning with improved handling practices • Extend solution life by minimizing drag-in • Use alternatives for acid and alkaline (e.g. water, steam, abrasive) • Pre-inspect parts to prevent drag-in of solvents and other cleaners • Install mixers on each cleaning tanks • Closely monitor solutions and make small additions to maintains solution strength instead of lathe infrequent additions • Implement a regular maintenance program to keep racks and tanks free of rust, cracks, or corrosion • Apply a protective coating to racks and tanks • Reduce solution drag-out to prevent solution loss • Use counter current rinsing to reduce waste water • Use reactive rinsing to extend bath life
	• Abrasive cleaning	• Used buffing wheels • Spent compound	• Use water based or greaseless binders to increase wheel life • Use liquid spray (water based) adhesive instead of bar abrasives to prevent over use of material and easier part cleaning • Carefully control water level in Mass Finishing • Equipment
	• Dry and wet rag cleaning	• Spent solvent wetted rugs • Oil soaked rags	• Wash and reuse rags on-site • Use an off-site rag recycling service • Minimize use of rags through worker training

Exhibit 4.5: Compendium of Processes Producing Waste (cont.)

General Industrial Category	Unit Operation	Common Waste Streams	Pollution Prevention Measures
Paper and pulp manufacturing (SIC: 26)	• Wood Preparation • Pulping • Screening • Washing • Thickening • Bleaching • Stock preparation • Paper machine • Finishing and • Converting	• Wood waste (saw dust, bark) • Acid and Alkaline waste waters • Toxic waste waters and sludges • Wood fiber waste • Non-hazardous waste water treatment sludge	• Use diffusion pulp wash systems to maximize efficiency • Maintain spray water temperature of 60- 70F to maximize rinse efficiency • Employ a closed cycle mill process to minimize waste water production • Reuse rich white water in other applications • Use felt showers to minimize the amount of fresh water use • Recycle white water • Develop segregated sewer systems for low suspended solids, high suspended solids, strong wastes, and sanitary sewer • Improve process control to prevent spills of material • Minimize overflows or spills by installing level controls in process tanks and storage tanks • Install redundant key pumps and other equipment to avoid losses caused by equipment failure and routine maintenance • Provide a storage lagoon before the biological treatment system to accept long-term shock loads • Replace the chlorination stage with an oxygen or ozone stage • Recycle chlorination stage process water • Use water from the counter current washing system in the chlorination stage • Perform high consistency gas phase chlorination
Textile processing (SIC: 22)	• Fabric weaving • Milling • Sewing • Pressing • Dying	• Waste thread, yarn and material • Dye contaminated waste water	• Market waste material as clean-up rags • Recover dye from waste waters
Waste water treatment (SIC: 20, 22, 26, 28, 29, 31, 33-39)	• pH adjustment • Filtration • Mixing • Flocculating • Clarification • Polishing	• Treated effluent • Hazardous treatment sludge • Non-hazardous treatment sludge	• Use alternative flocculants to minimize sludge volume. • Use filter a filter press and drying oven to reduce sludge volume • Automatically meter treatment chemicals • Minimize contamination of water before treatment
Plastic formation (SIC: 30)	• Injection Molding	• Machine clean-out waste (pancakes) • Scrap plastic parts • Plastic pellet spill to floor • Spent hydraulic oil • Oil-soaked absorbent	• Maintain machines with a regular maintenance program to prevent oil leaks • Regrind and reuse scrap plastic parts • Filter and reuse hydraulic oil • Use and industrial vacuum for spill cleanup instead of absorbent
	• Extrusion	• Scrap end pieces	• Avoid contamination of end pieces and reuse as feed stock

Exhibit 4.5: Compendium of Processes Producing Waste (cont.)

General Industrial Category	Unit Operation	Common Waste Streams	Pollution Prevention Measures
Plastic formation (SIC: 30) continued	• Foaming	• Fugitive air emissions • Stack releases • Scrap foam	• Improved material handling (mixing and transfer) to avoid spills • Implement a regular maintenance program to reduce fugitive emissions from leaky valves and pipe fit-tings
	• Composite materials	• Empty resin and • solvent containers • Spent cleaning sol-vents • Waste wash-down water • Cleanup rags • Waste fabric • Gelcoat and resin overspray • VOC emissions • Waste resins • Resin and solvent contaminated floor sweeping	• Maximize production runs to reduce cleanings • Regenerate cleaning solvent on-site and reuse • Use less toxic and volatile solvent substitutes • Reduce transfer pipe size • Use more efficient spray method for gelcoat application • Modify material application methods to prevent material spillage • Cover solvent and resin container to minimize evaporative losses
Glass processing (SIC: 32)	• Melting • Blowing • Molding	• Scrap glass • Contaminated • granular raw materials	• Avoid contamination of scrap glass and reuse as feed stock
Leather processing (SIC: 31)	• Tanning • Finishing	• Scrap leather material • Waste processing solution	• Recycle spent tanning solution
Fastening/ joining/ assembly (SIC: 24, 25, 27, 34-39)	• Gluing (adhesive) • Mechanical fastening • Welding • Part testing • Fluid filing	• Used adhesive container • Adhesive solvent • air emissions • Dried adhesive • Shielding gas emissions • Metal slag • Gasoline (motor test) • Oil and grease spilled to floor • Spent clean-up rags or towels	• Purchase adhesive in bulk containers • Use water-based adhesives • Use more efficient adhesive applicators • Use a rag recycle service • Reuse rags until completely soiled • Use rags sized for each job

Notes

REFERENCES

1. *Federal Facility Pollution Prevention: Tools for Compliance*; 1994, U.S. Environmental Protection Agency. Office of Research and Development, Cincinnati, OH 45268. EPA/600/R-94/154.
2. *Pollution Prevention Act of 1990*
3. *Facility Pollution Prevention Guide;* 1992, U.S. Environmental Protection Agency. Office of Research and Development, Cincinnati, OH 45268. EPA600R92088.
4. *Energy Conservation Program Guide for Industry and Commerce: NBS Handbook 115*; 1974, U.S. Department of Commerce. National Bureau of Standards, Washington DC 20402.
5. *Energy Conservation Program Guide for Industry and Commerce: NBS Handbook 115 Supplement 1*; 1974, U.S. Department of Commerce. National Bureau of Standards, Washington DC 20402.
6. *Annual Energy Review 1997,* July 1998, U.S. Department of Energy. Energy Information Administration, Washington, D. C. 20585. DOE/EIA-0384(97)
7. *Electric Power Annual 1995, Volume I,* July 1996, U.S. Department of Energy. Energy Information Administration, Washington, D. C. 20585. DOE/EIA-0348(95)
8. *Renewable Energy Annual 1997, Volume I,* February 1998, U.S. Department of Energy. Energy Information Administration, Washington, D. C. 20585. DOE/EIA-0630(97)

Notes

THIS PAGE INTENTIONALLY LEFT BLANK

Notes

CHAPTER 5. INDUSTRIAL OPERATIONS

Pollution prevention opportunities exist for a wide variety of industrial operations. The intent of this chapter is to provide a resource for common pollution prevention techniques for a broad range of industrial applications. The following twelve areas have been selected based on their widespread use in today's industrial operations.

- Office Operations
- Materials Management/Housekeeping
- Facility Maintenance
- Metal Working
- Cleaning & Degreasing
- Chemical Etching
- Plating Operations
- Paint Application
- Paint Removal
- Paper and Pulp Manufacturing
- Commercial Printing
- Waste Water Treatment

A process description, waste description, and pollution prevention opportunities are provided for each industrial operation highlighted. The information provided is not to be considered completely inclusive of all processing steps or wastes generate, nor is its intent to be completely exhaustive of all pollution prevention opportunities available to the reader.

5.1 Office Operations

Offices are the backbone of many industrial operations. Office personnel often handle procurements, administrative issues, contracting issues, legal issues, and the design and implementation of new procedures at industrial operations.

5.1.1 Waste Description

Office operations impact the amount of waste generated by industrial operations. Decisions made by office operations effect pollution prevention plans, the type of materials purchased, the types of materials disposed of, water usage, energy usage, paper usage, construction materials, demolition techniques, and recycling plans.

Besides affecting the wastes produced by industrial operations, offices also often utilize high amounts of energy and produce large quantities of waste through daily operations. Most of the office operations energy is spent on electrical equipment such as computers, fans, printers, lights, and calculators and HVAC equipment. Paper, cardboard boxes, and packaging materials usually compose the majority of solid waste produced by an office.

5.1.2 Pollution Prevention Opportunities

Pollution prevention opportunities for office operations are classified according to the waste management hierarchy in order of relevance; first, source reduction techniques, then secondly, (in-process) recycling options.

5.1.2.1 Source Reduction

Source reduction offers a number of pollution prevention opportunities including:

- Water Conservation,
- Energy Conservation,
- Paper Reduction, and
- Construction and Demolition Waste Reduction.

These four source reduction techniques are explained in greater detail below.

Notes

Water Conservation

Water conservation reduces pollution by reducing the demands on water and wastewater treatment plants. This, in turn, reduces the energy requirements, chemical usage, and the potential for environmental impacts from improperly treated wastewater effluent discharge.

Staff should request water usage statistics on a quarterly or monthly basis to track and identify increases in consumption. As the facility implements specific water conservation activities, water usage reductions can be documented.

The following list of water conservation strategies can be implemented to help reduce total water usage.

- Retrofitting plumbing with water saving devices (including faucet aerators and low-flow toilets).
- Performing regular water system leak detection and repair activities.
- Altering landscaping activities to reduce water use, including planting species that require less water (also known as xeriscaping) and reusing wastewater.

Benefits of Water Conservation

- Reductions in water use will reduce energy consumption and generation.
- Water conservation practices will create corresponding reductions in wastewater treatment, energy requirements, chemical use, and effluent discharge.
- Reducing water usage can help reduce operating costs associated with both the purchases of water and energy for water heating and treatment.

Limitations of Water Conservation

- Water saving devices can have higher capital costs than regular equipment.
- Re-landscaping a large facility can be a costly change.

Energy Conservation

A comprehensive facility audit or energy use tracking data can determine energy conservation opportunities. Lighting, heating, ventilating, air conditioning, office equipment and other systems should be examined. At many facilities, energy conservation strategies can be economically implemented with very little capital costs.

Lighting costs can be drastically reduced by:

- Reducing lighting levels and the number of fixtures,
- Using energy efficient bulbs or fixtures,
- Turning off light switches when not in use,
- Installing motion sensors or timers to automatically switch lights off when an area is unoccupied,
- Replacing incandescent bulbs with fluorescent bulbs,
- Taking advantage of natural sunlight by using top-silvered blinds and light colored finishes to reflect light, and
- Installing skylights in office areas.

Heating, ventilating, and air conditioning (HVAC) energy consumption can be reduced by:

- Keeping HVAC systems serviced;
- Setting core air temperature at the maximum allowable temperature for proper equipment cooling;
- Setting office thermostats to 68°F in winter;

Notes

- Properly insulating walls, floors, and ceilings with weather stripping, caulking, storm doors, and windows;
- Installing solar energy systems to reduce electric demand from HVAC systems; and
- Planting shrubs on the windward side of the building to block wind and decrease building heat loss.

Energy consumption by office equipment can be drastically reduced by:

- Considering energy efficiency when purchasing new equipment,
- Turning off electrical machines such as fans, typewriters, calculators, and copiers when not in use, and
- Using *Energy Star* computer and copier equipment designed to go into a "sleep mode" when idle.

Other practices that facilitate energy savings include:

- Insulate hot water pipes, heating ducts and steam pipes. The cost for heating systems is directly related to the heat they produce; this economic investment is wasted if the heat is allowed to radiate from uninsulated pipes or duct work.
- Perform routine leak checks on pneumatic lines. High-pressure leaks often result from cracked lines or loose fittings and can easily be detected with inexpensive leak detection equipment.

Benefits of Energy Conservation

- Energy conservation can help to reduce operating costs.
- Energy conservation reduces the demand for electricity and therefore smaller amounts of greenhouse gases, heavy metals, boiler ash, scrubber residue, and spent nuclear fuel are produced.

Limitations of Energy Conservation

- Energy efficient systems often come with a higher capital cost.

Paper Reduction

A facility-wide program can encourage staff to reduce paper consumption. Posters should be placed throughout the facility to remind and encourage staff to reduce their paper use. Some suggested methods to reduce paper consumption include:

- *Implementing a Facility-Wide Double-Sided copying Policy* - In those offices that have copiers with double-sided printing capabilities, personnel should be encouraged to make double-sided copies whenever possible. Instructions on making double-sided copies should be placed near the copier for ease and increased participation in the program. This practice reduces the generation of office paper waste and can greatly reduce the amount of paper purchased.
- *Expanding and Encouraging the Use of Electronic Mail* - Staff members should be encouraged to use electronic mail in place of paper memos and distribution copies.
- *Identifying Opportunities to Reuse Paper and Paper Products* - Corrugated cardboard boxes, jiffy bags, manila envelopes and other packaging materials are reusable for their original function. In addition, used paper can be reused as scrap paper.
- *Using the Blank Side of Used Paper* - Staff members should use the blank side of used paper for items such as internal memos, notes, phone messages, and scrap paper.

Benefits of Reducing Paper Consumption

- Significant reduction in the amount of paper products purchased, thereby generating substantive cost savings.
- Reduced solid waste disposal costs of bulky paper products such as coated cardboard boxes and packaging materials.

Notes

Limitations of Reducing Paper Consumption

There are no significant limitations to reducing paper consumption.

Construction and Demolition Waste Reduction

Although it may not be possible to modify existing construction contracts, the facility staff should consider inserting language requiring recovery or recycling of construction and demolition debris to the greatest extent possible, and include the language when negotiating future contracts.

Examples of typical construction and demolition debris that may be segregated for reuse or recycling are: wood products, cardboard, glass, carpeting, carpet pads, plumbing, hardware, and insulated wire.

Construction and demolition debris can be reduced or recycled at the construction site and earlier during the design and purchasing stages. For example:

- During the design stage, the contractor can select designs that utilize standard sizes (i.e., 8-foot lengths) to reduce off-cuts of lumber and wallboard,
- Evaluate design plans to ensure the efficient use of materials, and
- Wood, wallboard and other biodegradable materials can be composted.

Waste can be reduced during the purchasing stage by:

- Improving the accuracy of estimating procedures to ensure that the correct amount of each material is brought to the site, and
- Negotiating with suppliers to buy back unused materials. Ask for their assistance to identify materials that contain the least amount of hazardous products. In addition, ask suppliers to deliver supplies on returnable pallets and containers.

Waste can be reduced on-site by:

- Improving storage and handling procedures to reduce and prevent materials loss from weather and other damage,
- Salvaging reusable items, such as windows and doors for remodeling projects, and
- Segregating wood, wallboard and other biodegradable materials and send them to a composting facility.

Benefits of Construction and Demolition Waste Reduction

- Reduction in quantity of solid waste produced.
- Reduction in disposal costs.

Limitations of Construction and Demolition Waste Reduction

- Recycled materials may be more expensive than non-recycled.
- Separating waste from usable materials can be labor intensive and time consuming.

5.1.2.2 Recycling

Implement a Solid Waste Recycling Program

Many large facilities face the problem of low participation in the recycling program. Often large amounts of recyclables are thrown away and non-recyclable materials are found in the recycling bins. Improvements in the recycling program can often be made through the following activities.

- *Establishing Written Recycling Program Guidance and Distributing to Section Heads/Process Supervisors* – Recycling awareness can be improved within the facility through a written program. A written recycling program that clearly outlines materials that are recyclable, in what form (triple rinsed, crushed, baled, etc.), and where to recycle will educate personnel to the opportunities

Notes

available. Participation in recycling programs can be enhanced by through rewards and recognition of personnel.

- *Make Recycling Convenient* – This can be accomplished by providing bins in all areas where materials are generated. These bins can be purchased or can be fabricated using empty drums, crates, boxes, wood, or metal depending on the material to be collected.
- *Schedule Regular Collections* - to insure that personnel will have sufficient space for their recyclables. To do this, the facility engineer should work with the building managers to ensure they routinely collect recyclables and place materials in the correct dumpsters marked for recyclables.
- *Expand the Number of Waste Streams Recycled* – by forming a regional alliance with other facilities and private businesses in the local area or work with local recycling firms to expand services to include new waste streams.
- *Make Trash Disposal Less Convenient than Recycling* - in order to reduce the amount of recyclable material that is placed in trash containers. This can be accomplished by reducing the number of trash receptacles in buildings, limiting access to trash dumpsters, or decreasing the frequency of trash pickups. However, trashcans should not be too hard to find; otherwise the recycling bins will fill up with trash. Placing trashcans and recycling bins right next to each other sometimes helps reduce incorrect disposal practices.
- *Institute a "Clear Bag" Program for Trash Pickup* - A clear bag program requires facilities to dispose of all trash in clear plastic bags. The waste disposal contractor visually inspects bags before picking them up and does not pick up bags that contain recyclable materials. This places the burden of recycling on the generator.

Benefits of Implementing a Solid Waste Recycling Program

- Reduces the mass of materials entering the waste stream and the associated disposal costs.
- The sale of recyclable materials can be financially rewarding.

Limitations of Implementing a Solid Waste Recycling Program

There are no significant limitations to implementing a solid waste recycling program.

5.2 Materials Management/Housekeeping

The following section provides a process description, waste description and a broad range of pollution prevention opportunities that can be implemented to improve materials management and housekeeping operations.

5.2.1 Process Description

Materials mangers have a chance to generate economic, safety, and environmental benefits within an individual department as well as entire corporations. Efficient and effective materials management includes:

- Materials Purchasing
- Materials Tracking
- Material Mixing
- Managing Materials Requirements
- Spill Prevention and Clean-Up
- Improving Use and Reuse of Materials
- Materials Handling
- Materials Distribution
- Packaging and Shipping Concerns
- Minimizing On-Site Storage
- Employee Training on Materials Concerns

The duties of materials management represent the heart of any effective waste reduction and pollution prevention plan.

Notes

5.2.2 Waste Description

The goal of any materials management program is to reduce the waste generated through materials purchasing, handling, distribution, and clean up. Decisions about the purchasing of materials affect wastes due to under- or over-purchasing and packaging wastes. Decisions affecting materials handling affect spills and other losses. Distribution decisions affect the amount of waste generated due to spills and man-power. Clean-up decisions affect the amount of waste released to the environment versus the amount properly contained.

5.2.3 Pollution Prevention Opportunities

Pollution prevention opportunities for materials management/housekeeping operations are classified according to the waste management hierarchy in order of relevance; first, source reduction techniques, then secondly, (in-process) recycling options.

5.2.3.1 Source Reduction

Source reduction offers a number of pollution prevention opportunities including:

- Affirmative Procurement Program,
- Hazardous Material Control Centers,
- Bulk Fluids Distribution Systems,
- Automated Mixing Systems
- Packaging Design,
- Hazardous Materials Management,
- Spill Clean-Up Procedures, and
- Employee Education.

These eight source reduction techniques are explained in greater detail below.

Affirmative Procurement

Affirmative procurement refers to the purchase and use of materials containing recycled or recovered content in the greatest amounts practical, given resource and performance constraints. The EPA has established the Comprehensive Procurement Guidelines that identify categories of items to be purchased with recycled content and the recycled content level these items should contain. EPA guideline items include paper and paper products, retread tires, re-refined lubricating oil, building insulation, cement and concrete containing fly ash, engine coolants, structural fiberboard, laminated paperboard, carpet and floor tile, patio blocks, cement and concrete containing granulated blast furnace slag, traffic cones and barricades, playground surfaces and running tracks, hydraulic mulch, yard trimmings compost, office recycling containers and office waste receptacles, plastic desktop accessories, toner cartridges, binders, and plastic trash bags.

The facility should implement an affirmative procurement program. Typically, the steps to implement an affirmative procurement program include:

- Obtain EPA's Comprehensive Procurement Guidelines,
- Distribute a list of affirmative procurement items to purchasing staff,
- Train purchasing staff on affirmative procurement,
- Identify items to be procured with various levels of recycled content,
- Develop and implement a tracking program to monitor compliance and progress.

When establishing the affirmative procurement program, purchasing staff must require that vendors:

Notes

- Certify that the percentage of recovered materials to be used in the performance of the contract will be at least the amount required by applicable specifications, and
- Estimate the percentage of total material utilized for the performance of the contract which is recovered materials.
- Affirmative procurement requirements should be included in future construction agreements, so contractors will have to use recycled materials in the beginning phase of building.

Benefits of Developing an Affirmative Procurement Program

- Purchasing products with recycled content "closes the recycling loop."
- Affirmative procurement programs help to ensure that there will be a viable market for recyclables.

Limitations of Developing an Affirmative Procurement Program

- Implementing an affirmative procurement program can be man-hour intensive to set-up, especially if it is a new concept to the facility.
- Efforts have to be made to ensure that product quality and/or work efficiency are not comprised by the use of materials comprised of recycled content.

Implement a Hazardous Material Control Center

Proper materials management can suppress chemical losses and spills thereby reducing costs and waste stream outputs. Records of chemical purchases, inventory, bath analyses, dumps and additions, water usage, wastewater treatment chemical usage, and spent process bath and sludge analyses must be kept in order to gather an overview of an operations material balance and waste costs. From these records, data can be gathered and used to determine the success of an overall minimization policy. Process-specific material balance block diagrams can be drawn and shared with operators. These diagrams illustrate origins of waste production clearly and can be used to re-engineer operations to reduce chemical loss.

Standardization of materials used throughout a facility can greatly reduce chemical inventory, thereby reducing costs. Decisions to purchase one chemical rather than another must consider technical requirements, environmental impacts, and cost.

The initiation of a facility-wide hazardous material control center (HMCC) will help reduce hazardous material purchases and reduce the generation of hazardous wastes due to improper storage and expiration of shelf life. One of the primary purposes of implementing an HMCC is to centralize the purchase, storage, distribution, and management of hazardous materials (HM) throughout the facility, as well as to allow for enhanced tracking of the movement of hazardous materials and wastes. The following concepts are good building blocks for a successful HMCC program.

- *Proper Coordination* - can centralize the purchase, storage, and distribution of materials through a single location within the facility. To do this, it is critical that the staff establishing the HMCC talk with facility staff that use chemicals to document exact usage patterns of all materials. The end result of the entire HMCC is to purchase only the amount of materials needed by each activity.
- *Standard Operating Procedures (SOP)* - are a set of written guidelines or standards for operating the HMCC.
- *Review and Approval* – of the purchase of all materials that contain hazardous components should be handled by the HMCC. A list of approved hazardous chemicals and applications should be developed for each shop at the facility. Materials that are hazardous to human health or the environment should require approval for each purchase. The HMCC should continually strive to identify and purchase substitutes for these hazardous materials. This process would include the evaluation of specific hazardous materials on an annual basis to determine if approved substitutes are available.
- *Inventory Tracking* - can be improved by using a bar-coding system for all hazardous materials used at the facility. The bar-coding system can be used to track the purchase and receipt of chemicals and

Notes

materials at the facility, as well as the requisition of chemicals from the HMCC area to individuals or shops. Inventory tracking can also be improved with the aid of a tracking system.

- *Inventory Controls* - should be establish through central storage and inventory points for chemicals and materials used in various locations at the facility. These storage points (or satellites) could coincide with flammable lockers already located throughout the facility and could be used to store the hazardous materials issued to each shop. Further, each satellite should maintain a written inventory of materials that would be updated as materials are used and stocked. These inventories would be cross checked against the computer tracking system to verify the location and usage of materials purchased. Materials used could be stored (daily or weekly) after use.
- *Purchase* - of hazardous materials routinely used in large quantities should be available for quick delivery.
- *Review and Inspection* – of procedures ensures proper usage of lockers and compliance with the HMCC guidelines outlined by the facility.

Successful implementation of a HMCC will require that select facility personnel, particularly supply personnel, receive specialized training in the administration of a HMCC. Furthermore, all personnel whose jobs require the use of hazardous materials or result in the generation of hazardous wastes will require training on how the HMCC will operate, why it was implemented, and what their roles and responsibilities will be.

Benefits of Implementing a Hazardous Material Control Center

- A HMCC can identifying and quantifying the types and amounts of hazardous materials purchased and used in order to create a baseline.
- Improves accountability, tracking, and control of hazardous materials.
- Reduces overuse of hazardous materials.
- Reduces occurrences of shelf-life expiration.
- Provides shops with the opportunity to return unneeded or unused requisitioned materials for use by others.
- Ensures timely substitutions of accepted environmentally preferable products.
- Allows the purchase of some materials in refillable and/or bulk containers to reduce packaging waste.

Limitations of Implementing a Hazardous Material Control Center

- Planning and organization requires extensive man-hours.
- Capital costs for computerized tracking systems can be expensive.
- Program requires all levels of staff acceptance to function properly.

Install a Bulk Fluids Distribution System

Bulk fluid distribution systems should be purchased and installed to significantly decrease material costs. Typically, petroleum, oil, and lubricant (POL) products cost up to 30 percent less when purchased in bulk rather than in quarts or gallons, and the labor required to triple rinse 5-gal pails prior to disposal is eliminated. Purchasing fluids in bulk also eliminates the costs associated with landfill disposal of non-recyclable containers. Following installation of a bulk dispensing system, products should be purchased in larger units of issue (i.e., 55-gal drums) and dispensed.

There are four basic types of bulk distribution systems including portable tank units, 55-gallon drum pumps, bulk distribution racks, and overhead bulk distribution systems. The determination of which system is appropriate is dependent on the volume of fluids dispensed per year and the space available to install the equipment. The following is a brief explanation of each type of bulk oil distribution system and the advantages of each.

Notes

- *Portable Tank Unit* - consists of a 24.5-gal tank (oil dispenser), hose assembly (with 50 feet of hose), and electronic control handle. Nitrogen gas (or an acceptable substitute) can be used to discharge the oil from the tank. Pressurizing the tank eliminates the need for an external power source to operate the pump (air, electricity). The unit can be mounted on a movable cart for use in various areas. The portable tank is sealed and pressurized to eliminate the possibility of contamination of the oil tank during servicing of vehicles or machinery.
- *55-Gallon Drum Pump* - connects directly to a 55-gallon drum and includes a trolley, air pump, bung screw, connecting hose, hose reel, and control handle. The hose is 33 feet in length, but can be rigged as long as 50 feet. The unit can also be equipped with stainless steel recoil hose reels, which may be needed in colder climates. Manufacturers recommend ordering the system with an electronic oil meter because they are much better than the older style mechanical meters and cost the same. They also recommend using an air regulator inside the drum. This system works well in shops with limited overhead space. Since fluid is dispensed from the same container as it is received, it eliminates the possibility of spill during transfer of fluid from a 55-gal drum to a secondary container.
- *Bulk Distribution Rack* - dispenses fluids from pre-set containers organized in a rack system. Each container holds 65 gallons, and is equipped with a site glass to monitor stock levels. Fluid is gravity-fed to a fixed dispensing point. A second container is required to transfer the fluids from the rack to a portable container. The transfer pump removes the fluids from the original 55-gal container and fills the container on the rack so there is no heavy lifting required. The number of containers and size of the rack can be ordered to meet the specific needs of the shop area. The system works well in shop areas with limited floor space. The downside of bulk distribution is that a small amount of cross contamination of products may occur when switching transfer pumps from one fluid type to a second.
- *Overhead Bulk Distribution System* - is custom designed to the user's specifications to dispense fluids from transfer lines suspended above the shop floor. This system reduces labor costs by placing commonly used fluids within the operator's reach. The volume of fluid dispensed can be metered to achieve accurate volumes. Fluids are dispensed from a central location, either in the maintenance area or in an adjacent room from 55-gal drums or storage tanks with air driven pumps. Electronic tracking devices can be installed to monitor and record fluid usage. Typically air, grease, hydraulic fluid, gear oil, motor oil, and antifreeze are dispensed with this system. The system eliminates the labor required to retrieve the fluid product from a drum or dispensing rack.

Benefits of Installing a Bulk Fluids Distribution System

- Reduces disposal of empty containers.
- Cost savings associated with purchasing in bulk.
- Reduces loss of product.
- View windows on the fluid containers provide a constant reading of fluid amounts, so a shortage or overstock of fluids is minimized or eliminated.
- Increased operating efficiency.
- Conservation of valuable shop floor space.

Limitations of Installing a Bulk Fluids Distribution System

- Cross contamination may occur when switching transfer pumps from one fluid to a second.
- Spills may occur when transferring fluids from a 55-gallon drum to a portable unit.

Minimize Packaging Waste Through Design

Without compromising health, safety, or product-integrity standards or violating regulatory requirements, preferred packaging design practices should be implemented. Looking at total cost,

Notes

environmental impacts and site-specific considerations is critical to making a competent decision. Preferred packaging practices are discussed below.

- *Reduce Packaging Size* – to eliminate unnecessary solid waste. The ultimate goal of packaging elimination is often not technologically feasible, but should be attempted, provided product integrity will not be jeopardized. Computer aided design programs can be used to devise efficient systems to protect and package almost any product. Besides reducing the amount of packaging entering the waste stream, decreasing the packaging size can also reduce shipping, disposal, and raw material costs.
- *Environmentally Benign Materials* – should be utilized whenever possible. Toxic, non-biodegradable, and hazardous materials in the packaging often can be eliminated or reduced through the use of environmentally friendly products. For example, items such as starch-based water-soluble packing peanuts may replace environmentally detrimental non-biodegrade polystyrene packaging.
- *Bulk and Concentrated Materials* – should be utilized whenever possible. Products shipped in the concentrated form are reduced in size, which reduces the amount of packaging required, while bulk containers give more product with less packaging, therefore reducing the overall waste.
- *Multi-Use Items* – can reduce the mass of packaging material used by decreasing the total number of items shipped. Reducing the number of items shipped also reduces shipping, disposal, and raw material costs.
- *Readily Recyclable Packaging* – reduces the amount of manual labor required to prepare materials for recycling, and insures that recycling is economically feasible. In order to create readily recyclable packaging dissimilar materials such as foam and corrugated cardboard cannot be bonded, and packaging is composed of as few materials as possible.
- *Durable or Repairable Packaging* – can reduce the mass of waste entering the waste stream. Items such as broken wooden pallets or reels should be fixed whenever possible, or replaced with more durable materials. Durable and fixable items also save the cost of disposal and replacement of packaging materials.
- *Recycled Products* – should be used in packaging whenever possible in order to complete the cycle. Recycled packaging materials can work as well, if not better than, non-recycled products. The use of recycled products is necessary for the recycling process to work.

Benefits of Minimizing Packaging Waste Through Design

- All packaging waste entering the waste stream is ended with packaging elimination.
- Packaging size reduction reduces shipping, disposal, and raw material costs.
- Environmentally benign materials can eliminate or reduce the amount of toxic, non-biodegradable, and hazardous materials being produced and disposed of.
- Bulk containers give more product with less packaging, therefore reducing the overall mass of wastes.
- Multi-use items can reduce the amount of packaging entering the waste stream by decreasing the total number of items shipped.
- Durable or repairable packaging can reduce the mass of unnecessary packaging waste entering the waste stream, disposal costs, and replacement costs.
- The use of recycled products is necessary for the recycling process to be profitable.

Limitations of Minimizing Packaging Waste Through Design

- Packaging waste elimination is not technologically feasible in most applications.
- Packaging redesign to reduce the size may be economically impracticable.

Notes

- There may be many conflicts between competing goals, such as recyclability and cost reduction.
- Recycled packaging can be more expensive than new materials.

Improve Hazardous Materials and Waste Management, Secondary Containment, and Labeling Procedures

Not only should substitutes be found and used in place of the hazardous materials, but also on-hand supplies should be reduced. Ensure proper hazardous waste storage and labeling procedures are being followed and train personnel to insure compliance with local, State, and Federal regulations. Containers used to store hazardous waste (e.g., paint waste, batteries, waste flammable liquids) must be properly identified with a hazardous waste label. The specific information required to be on the label includes the generator's USEPA identification number, the words "hazardous waste", USEPA hazardous waste number, substance name, and generation date or start/ending accumulation dates.

It is generally good practice to store other wastes (i.e., waste oil, waste antifreeze, used oil absorbent pads) in well-labeled containers with secondary containment. It is also a good practice to make sure all containers are labeled, especially if they contain hazardous materials. In addition, metal drums stored outside should be covered so the integrity of the drums will not be compromised.

Benefits of Improved Hazardous Materials and Waste Management, Secondary Containment, and Labeling Procedures

- Helps to avoid future liabilities from regulatory agencies.
- Reduces the potential generation of waste through mislabeling, improper storage and handling, and exposure to weather.
- Reduces the quantity of hazardous waste generated.
- Reduces the reporting burden and cost of hazardous waste disposal.

Limitations of Improved Hazardous Materials and Waste Management, Secondary Containment, and Labeling Procedures

There are no direct limitations to improving hazardous materials and waste management, secondary containment, and labeling procedures.

Improve Spill Clean-up Procedures

All industrial operations should improve their spill prevention and cleanup practices to reduce waste generation. This involves a hierarchy of options that are listed below.

- *Use drip pans* - to collect the fluids during the draining process and to collect minor drips and leaks during servicing. This will prevent the leaks from dripping to the floor that will reduce the need to use absorbent material or rags to clean the spills. This will also reduce labor time to clean the floors.
- *Shop Vacuum for Oil Spills* - provide the most environmentally sound way of managing uncontained oil. This process ensures recoverability of the spilled oil for future recycling prospects. Several vacuums are commercially available for use in wet or dry situations.
- *Reusable pads and wringers* – can be used to clean the spills and leaks. These pads are highly absorbent and can be used several times 4 –10 before having to be disposed. Once the absorbent pads are saturated with oil, the pads can be passed through a wringer that sits on top of a 55-gallon drum which removes a large amount of the oil, allowing the pad to be reused. Facilities should discuss what materials the reusable pads and wringer can be used with to avoid any safety issues.
- *Collect and reuse dry sweep* - if it is not possible to use absorbent pads. It is recommended that the shops purchase or construct a dry sweep "sifter". This device is simply a mesh screen which filters usable dry sweep from saturated dry sweep. The saturated dry sweep forms clumps that cannot pass through the screen, whereas the unclumped, clean dry sweep can be reused. A small trap door located at the bottom of the drum is then used to distribute the reusable dry sweep. Once the dry sweep is spent, the dry sweep can be compacted. Compaction of spent sorbents can be accomplished

Notes

using mechanical compactors. Mechanical compactors compress liquids from the sorbent and also serve to reduce the volume of the absorbent material such that a much smaller number of containers are required for disposal. Mechanical compactors are typically designed to compact the contents of drums, and may be fitted with pumps to transfer the liquid to a separate collection container. Sorbents are typically not reusable after compaction.

- *Hydrophobic Mops* - have a high viscosity oil mop head composed of 100 percent polypropylene, which makes it very effective at absorbing and containing oil spills. The advantage of using this type of mop head is that it is water resistant and will absorb only oil if other materials (i.e. water, engine coolant) are part of the spill. The mop can be reused up to 7 times or more before disposal.
- *Reuse Rags and Absorbent Materials* - to wipe, absorb, or clean-up spills. The rags should be saturated with the substance before being laundered or disposed. Applicable materials include rags, floor sweeps, absorbent pads, or any disposable towel. Designate two separate containers for partially-used rags and saturated rags to be laundered or disposed. When finished cleaning a spill, decide whether the rag is partially or entirely saturated and place it in the proper bin. Ensure that all shops follow these procedures.

Benefits of Improved Spill Clean-up Procedures

- Reduces raw material costs and waste generation.
- Reduces labor time required to clean up unnecessary spills and leaks.

Limitations of Improved Spill Clean-up Procedures

- It is hard to predict leaks, so drip pan placement is difficult.
- Clean-up equipment can be expensive.

Employee Education

A high level of employee awareness and education is an essential part of any company's overall pollution prevention program. The success or failure of specific procedures depends largely on employee attitudes toward that policy. The employees must discern a company-wide effort supported at all levels of management that affords the tools and data to ensure success.

Employee training should cover minimization or prevention of waste generation at the source, routine process chemistry additions and sampling, handling of spills and leaks, and operating of pollution prevention and control technologies. Background information should be available to employees, such as a background of the applicable regulations, overall benefits to health and safety in and out of the workplace, and overall cost of waste disposal before and after the successful implementation of waste minimization procedures. This training should be integrated with normal operator training, and pollution prevention and control procedures should be included in the written operating procedures of each process.

Benefits of Employee Education

- Can create enthusiasm about programs.
- Can reduce chemical usage and losses.

Limitations of Employee Education

- Requires extra man-hours for training.

5.2.3.2 Recycling

Recycling and reuse opportunities exist both on and off-site for facilities. Recycling and reuse have innumerable benefits both financially and environmentally.

Notes

On-Site Recycling

Internal Supply Reuse

Material reuse can be an environmentally friendly effective solution to excess materials. Reuse curtails the flow of material into the waste stream, and does not require the energy necessary for recycling. Disposal costs and packaging materials costs can also be reduced through reuse. Packaging materials such as barrels, crates, polystyrene peanuts, bubble-wrap, and cardboard boxes can be reused internally in many operations. Packaging materials are often reused for storage, internal mail, internal freights, or shipping product externally.

Benefits of Reusing Supplies

- Packaging reuse decreases the mass of materials entering the waste stream.
- Reduces the amount of toxic and non-biodegradable materials entering the waste stream.
- Decreasing mass of material entering the waste stream can decrease disposal costs.
- Raw material costs may decrease.

Limitations of Reusing Supplies

- Sources for unwanted materials may be difficult to find.
- Separating packaging materials for reuse can be time consuming and labor intensive.

Off-Site Recycling

Returnable Containers

Returnable containers (returnables) are containers that are shipped back to the original supplier when empty. Examples include metal racks, rigid plastic racks, metal skids, returnable bins, and totes. Returnables often contain expendable materials to protect the parts.

Returnables usually have a greater tare weight, which may increase transportation costs and have negative ergonomic impacts if the containers are manually handled. If a part is changed significantly, the returnable containers may have to be altered or completely changed at a relatively high cost. With a large number of suppliers, plants may find returnables create a logistical problem requiring detailed tracking and at-plant storage. Costs to return these containers may be large, especially if the containers do not break down or nest and if the distance traveled is great. Returnables need periodic cleaning, repair, and maintenance, which is an on-going expense. Returnables often have features such as "feet," ribs, or other protrusions that may inhibit plant materials handling systems. Obviously, these containers do not require disposal, therefore use of returnables avoids the ever-increasing expense. Despite some of the drawbacks mentioned, returnables are an attractive option for many situations, especially if the suppliers are relatively close. Also, when damaged or obsolete, the racks can be sold back to the manufacturer and recycled into new racks.

Benefits of Returnable Containers

- The initial costs for returnables can be recovered.
- Greatly reduces the mass of packaging materials entering the waste stream.
- Reduces land disposal costs.
- Racks can typically be recycled when damaged or obsolete.
- Racks are often composed of recycled material.

Limitations of Returnable Containers

- Returnable containers require a high initial investment.
- Logistical problem may require detailed tracking and at-plant storage.
- Costs to return these containers may be prohibitive.

Notes

- Periodic cleaning, repair, and maintenance and an on-going expense to utilizing returnables.
- Design of returnable containers may inhibit handling systems.
- The added tare weight of returnables may increase transportation costs and have negative ergonomic impacts if the containers are manually handled.
- Part changes can require that the returnable containers be altered or completely changed at a prohibitively high cost.

Recycling Expendable Packaging

Expendable packaging is used once and then discarded or the material content is recycled. These include corrugated boxes, shrink-wrap, styrofoam peanuts, wood skids, plastic, and metal banding. Expendable packaging is lightweight and may reduce shipping costs. It can be easily modified if parts are changed, which provides greater flexibility. Recycling of expendable packaging is a good option, but involves internal labor to sort and handle. If the packaging is well thought out and the proper systems are in place in a plant, sorting and handling costs can be greatly reduced. The markets for recycled materials must be located and prices vary from location to location and from year to year. Expendable packaging may not be suited near operations sensitive to fiber contamination or near ignition sources.

Benefits of Recycling Expendable Packaging

- Avoids some logistical problems since expendable packaging is not returned to the supplier.
- Avoids increasing disposal costs.
- Reduces mass of packaging material entering the waste stream.
- Expendable packaging has virtually no initial investment.
- The lightweight characteristics of expendable materials can reduce shipping prices.

Limitations of Recycling Expendable Packaging

- Markets for the recycled materials must be located.
- Recycling involves internal labor to sort and handle the expendable materials.
- Expendable materials are not suited for areas sensitive to fiber contamination or areas near ignition.
- The recycling market is highly variable.

Materials Management

Proper materials management can suppress chemical losses and spills thereby reducing costs and waste stream outputs. The main methods of materials management are below.

Employee Education

A high level of employee awareness and education is an essential part of any company's overall environmental program. The success or failure of specific procedures depends largely on employee attitudes toward that policy. The employees must discern a company-wide effort supported at all levels of management that affords the tools and data to ensure success.

Employee training should cover minimization or prevention of waste generation at the source, routine process chemistry additions and sampling, handling of spills and leaks, and operating of pollution prevention and control technologies. Background information should be available to employees, such as a background of the applicable regulations, overall benefits to health and safety in and out of the workplace, and overall cost of waste treatment before and after the successful implementation of waste minimization procedures. This training should be integrated with normal operator training, and pollution prevention and control procedures should be included in the written operating procedures of each process.

Notes

Chemical Tracking, Inventory, and Purchasing

Records of chemical purchases, inventory, bath analyses, dumps and additions, water usage, wastewater treatment chemical usage, and spent process bath and sludge analyses must be kept in order to gather an overview of the shop's material balance and waste costs. From these records, data can be gathered and used to determine the success of an overall minimization policy. Process-specific material balance block diagrams can be drawn and shared with operators. These diagrams illustrate origins of waste production clearly and can be used to re-engineer plating lines to reduce chemical loss.

Standardization of materials used throughout a shop can greatly reduce chemical inventory, thereby reducing costs. Decisions to purchase one chemical rather than another must consider technical requirements, environmental impacts, and cost.

Optimize Mixing Operations

Optimize mixing operations so that only the needed amount of materials is mixed. Limiting the volume of chemicals mixed to the exact amount required to perform the job reduces the volume of excess chemicals disposed per shift.

5.3 Facility Maintenance

The following section provides a process description, waste description and a broad range of pollution prevention opportunities that can be implemented to improve facility maintenance activities.

5.3.1 Process Description

Facility maintenance assures that the facility is able to achieve a performance level consistent with design and engineering. Maintenance personnel typically:

- Perform routine maintenance on machines,
- Maintain the facility grounds,
- Fix or replace broken parts, and
- Keep the facility and machinery clean.

5.3.2 Waste Description

Through daily tasks, maintenance personnel encounter many different waste streams. Potentially hazardous lubricants, fluids, and filters are produced as a result of routine maintenance. Maintaining facility grounds often produces large quantities of yard waste, and brings personnel in contact with potentially hazardous chemicals. Fixing and replacing parts can produce wastes such as light bulbs, while keeping the facility clean can produce large quantities of water.

5.3.3 Pollution Prevention Opportunities

Pollution prevention opportunities for facility maintenance operations are classified according to the waste management hierarchy in order of relevance; first, source reduction techniques, then secondly, (in-process) recycling options.

5.3.3.1 Source Reduction

Source reduction opportunities for facility maintenance exist for routine oil changes, ground maintenance, and material substitution.

Establish an Oil Analysis Program

The quality of the oil from a facility's machinery should be tested before scheduled changes and only changed when tests indicate that it is needed. There are two options to implement this opportunity: (1) purchase oil analysis equipment, or (2) pay an outside company to test the oil. The cost for implementing the oil-testing program will depend on the detail of analysis needed and the availability of facility personnel to perform the tests. Acquiring the services of an outside vendor is generally more economically beneficial if a detailed analysis of oil is needed. Often the more detailed the analysis needed the more economical it is to

Notes

have outside vendors perform the analysis. However, there is a time delay in obtaining results (1 day to 7-14 days) when an outside vendor is used.

Oil analysis equipment tests the physical and/or chemical constituents of the oil to determine its quality level. There are two types of oil analysis -equipment that can be purchased to test the oil. The first is a hand-held oil analyzer that provides limited information on the level of water and fuel contamination. The second type of equipment is a PC-based program that uses a particle separator and viscometer to determine oil quality. The parameters that are typically evaluated in determining oil quality include viscosity, total base number (a measure of the oil's ability to neutralize acids), and the concentration of some metal ions (e.g., calcium, magnesium, phosphorus, sodium, and zinc), which are components of many additives. Regardless of which system is purchased, operator training is minimal.

Benefits of an Oil Analysis Program

- Oil changes potentially reduced by 50% or more.
- Decreases the volume of oil and number of filters used.
- Reduces quantity of oil wastes and oil filter wastes.
- The manpower spent changing oil can be drastically reduced.

Limitations of an Oil Analysis Program

- Off-site testing can take as long as 14 days.
- Not following maintenance schedules can void equipment warranties.

Implement Environmentally Preferred Grounds Maintenance Practices

Many facilities have grounds maintenance activities on a daily basis that include landscaping, leaf and brush removal, pesticide and fertilizer application, turf maintenance, lawn trimming and mowing. Implementing the following pollution prevention activities can reduce the impacts associated with grounds maintenance activities.

- *Reduce/Eliminate Chemical Use* - pesticides and herbicides wherever possible. The negative long-term effects of the applications of these chemicals on the environment have been well documented. In addition, improper use and mismanagement of chemical pesticides can result in human health concerns. Over-mixing and over-application of landscaping chemicals leads to the generation of unnecessary waste and environmental degradation. Application near environmentally sensitive areas such as wetlands and tidal basins should be avoided.
- *Practice Environmentally Sound Pesticide Management* - use pesticides with low mobility, high adsorption, and low persistence. Training employees in proper pesticide preparation, application, and safe handling procedures to maximize product effectiveness and reduce the risk of accidental spills. Use proper lawn care product application equipment and techniques to minimize excessive spraying. Practice Integrated Pest Management (IPM) to minimize use of pesticides by utilizing organic equivalents, beneficial insects and pest tolerant plant species. Practice strict inventory control to prevent material expiration.
- *Avoid Unnecessary Pesticide Use* – through spot application practices. This practice ensures that the smallest amount of chemical is applied to the ground and that the chemical is applied only in areas where it is needed. Spot application reduces contamination of surrounding soil and local groundwater supplies. Timely application ensures that applied chemicals do the most good when application is needed. This includes applying chemicals at times when they are most likely to be absorbed by the target species and not spraying in windy conditions or immediately before predicted precipitation events, which could blow or wash the applied chemical into the surrounding environment.
- *Employ Environmentally Sound Fertilizer Management* - to avoid applying excess fertilizer. Use the rates that are recommended for the product by the manufacturer. Understand the needs and growth requirements of the plants, and use the minimum amount of fertilizer necessary to meet the plant needs.

Notes

- *Replace Turfgrass with Native Plants* - which are hearty and require low maintenance.
- *Improve Mowing Practices* – to reduce waste. Mowers should be set so that no more than 1/3 of the lawn height (no more than 1 inch total) is removed with each mowing. Also, keep mower blades sharp and leave grass clippings in place after mowing.
- *Compost Yard Waste* – and substitute it for organic matter such as mulch and topsoil, normally purchased for grounds maintenance.
- *Develop Standard Operating Procedures (SOPs)* - and other outreach materials for contractors and/or staff that are involved in grounds maintenance activities. SOPs and other materials should describe and promote environmentally sound approaches to landscaping.

Benefits of Implementing an Environmentally Preferred Grounds Maintenance Practices

- Reduces the total solid waste disposal costs by decreasing the waste stream.
- Minimizes the hazardous waste stream by reducing potentially toxic fertilizer, pesticide, and herbicide use.
- Potential hazardous waste disposal costs can be decreased.
- Reduces water usage, energy usage, and labor costs.

Limitations of Implementing an Environmentally Preferred Grounds Maintenance Practices

- Re-landscaping can be economically prohibitive.
- Outside contractors often handle facility maintenance.

Substitute Low Mercury Fluorescent Tubes for Standard Tubes

Low mercury fluorescent tubes can be directly substituted for many standard fluorescent tubes. The mercury content of these tubes is much lower than standard tubes and the many of the tubes will meet TCLP testing for non-hazardous waste.

5.3.3.2 Recycling

There are many recycling opportunities available to facility maintenance personnel. Recycling programs can be utilized to recycle or reuse:

- Steel containers and Oil filters,
- Scrap Metal and Wood (pallets),
- Fluorescent light bulbs and Lamp ballasts,
- Shop towels,
- Antifreeze, and
- Wash water.

These recycling opportunities and their associated benefits and limitations are discussed in further detail below.

Implement a Used Oil Filter/Steel Container Recycling Program

Used oil filters and steel containers, such as empty aerosol cans and paint cans are often disposed of in the municipal solid waste stream, when they can be recycled. A comprehensive used steel container recycling program for industrial and shop operations can reduce non-hazardous solid waste and environmental liability from landfilling of containers that once contained petroleum based products. Used oil is removed from oil filters either via crushing, shredding or dismantling for use in fuel blending operations, waste to energy recovery, or oil reclaiming operations. The steel recovered from used oil filters, aerosol cans, and paint cans, are crushed into dense cubes, and used by steel mills as a raw material.

Notes

- *Steel Container/Used Filter Recycler* – should be able to handle several or all miscellaneous steel waste streams in order to simplify the management oversight required to handle the contract, and may allow the waste streams to be commingled at the point of generation for enhanced recyclability. Certification that 100 percent of the waste stream received is recycled and cradle-to-grave tracking to eliminate future liability from the waste stream are two important qualities to look for in any recycler.
- *Place Recycling Containers in Convenient Locations* – such as near the point of generation is important for increased recycling participation of any waste stream. The service contract established with a steel recycler should provide timely removal of full containers.
- *Awareness Training* - is the key to any successful recycling program. Personnel must properly understand what is and what is not recyclable, and where to recycle it. When personnel are unsure of whether or not an item is recyclable, 9 out of 10 times it will end up in the waste steam. Monthly updates in the newsletter and recycling posters promoting the recycling of new waste streams will help educate personnel on proper procedures and an environmentally friendly alternative disposal method to landfilling.

Benefits of Implementing a Used Oil Filter/Steel Container Recycling Program

- Recycling will reduce the quantity of solid waste generated by the facility.
- Disposal costs will be reduced.
- Sale of recyclable materials can be economically beneficial.

Limitations of Implementing a Used Oil Filter/Steel Container Recycling Program

- A recycling program is limited staff participation.
- A local recycler has to be able to handle the types and amounts of materials generated.

Establish a Recycling Program for Fluorescent Lights and Ballasts

Fluorescent and high-intensity discharge lamps contain mercury to conduct the flow of the electric current. Historically, fluorescent lights have been discarded in landfills, where they can break and release mercury into the environment. This potential hazard has caused many states to classify fluorescent light tubes as hazardous waste and require that they be managed in accordance with applicable hazardous waste laws and regulations. There are recyclers across the nation who accept fluorescent light tubes for recycling.

Lamp ballasts can also be recycled. Fluorescent lighting ballasts manufactured before 1980 contain polychlorinated biphenyls (PCBs), which also have disposal problems associated with them. In fluorescent fixtures, PCBs were usually found in ballasts within small capacitors or in the form of a black, tar-like compound. The useful life of ballasts is approximately 15 years, so disposal of ballasts containing PCBs should not be a problem much longer since ballasts produced after 1980 do not have PCBs. If a ballast is not labeled “NO PCBs,” it should be assumed that it contains PCBs.

Diethylhexylphthalate (DEHP) was used to replace PCBs in certain ballast capacitors beginning in 1979. DEHP is considered a human carcinogen. Ballasts designed for the following fixtures contained DEHP: four foot fluorescent fixtures manufactured between 1979 and 1985; eight foot fluorescent fixtures manufactured between 1979 and 1991; and high intensity discharge fixtures manufactured between 1979 and 1991. To determine if a ballast contains DEHP, the manufacturer should be contacted or the capacitor should be sent to a laboratory for tests.

Facilities are encouraged to manage all ballasts as hazardous because of the possible PCB or DEHP content. Recyclers remove the PCB- or DEHP-containing materials for incineration or land disposal. Metals can be reclaimed from the ballasts for use in manufacturing other products.

Fluorescent bulb recycling costs range from $0.06/ft to $0.15/ft, not including packaging, transportation, or profile fees. Disposal costs at a hazardous waste landfill range from $0.25-$0.50 per four foot fluorescent tube and $0.33-$0.83 per ballast, not including packaging, transportation or profile fees.

Notes

Recycling the light bulbs intact instead of crushing them at the facility is preferable in order to reduce possible employee exposure to mercury vapors. After accumulating a number of tubes, the facility should ship them to a vendor for recycling or arrange for a recycler to pick them up. Some vendors prefer the lights be boxed in their original packaging; others provide special shipping boxes which comply with DOT specifications. Lamp ballasts should also be recycled.

Fluorescent lights with lower concentrations of mercury should be purchased. A new low-mercury fluorescent light tube became available in late 1995. The four-foot tube contains 10 milligrams of mercury compared with 22.8 milligrams in currently produced lamps, down from an industry average of 38.4 milligrams per tube in 1990.

Benefits of Establishing a Recycling Program for Fluorescent Lights and Ballasts

Recycling spent fluorescent lighting tubes offers an environmentally sound alternative to solid or hazardous waste disposal.

- Shipping the tubes intact reduces the risk of employee exposure to mercury.
- Permitting should not be required if tubes are sent for recycling.

Limitations of Establishing a Recycling Program for Fluorescent Lights and Ballasts

- Tubes must be collected until enough are collected to be economically efficient to send.
- All employees must participate in the recycling program.

Implement a Shop Towel Laundry Service

A facility-wide shop towel laundry program with a commercial laundry should be developed. Industrial laundry services generally pick up the dirty shop towels and drop off clean ones each week. Most laundries will accept all shop towels except those contaminated with hazardous waste. Depending on the vendor, shop towels may be provided with the service.

Personnel should ensure that all shop towels are used to their maximum potential before sending them to the laundry service to be washed. Extending the service life of the shop towels through improved operating procedures can reduce program operating costs and reduce water consumption at the laundry. Therefore, each shop should designate one container each for clean, used, and partially used shop towels.

Benefits of Implementing a Shop Towel Laundry Service

- Up to a 90% reduction in waste generation can be noticed with laundered towels versus disposable.
- Environmental liabilities associated with improper disposal practices are reduced.

Limitations of Implementing a Shop Towel Laundry Service

- Laundry services can be more expensive than disposable shop towels.

Establish an Antifreeze Recycling Program

Facilities should establish an antifreeze recycling program to recover used antifreeze. Facilities can purchase either a bulk recycler for processing large amounts of antifreeze or smaller units that can simultaneously filter fluid and flush cooling systems of machines, automobiles, and small trucks. Bulk recyclers have a higher initial cost but lower operating costs than the smaller ones.

Currently, there are two popular reclamation systems. One system uses ion exchange and the other uses vacuum distillation as the primary separation/purification process. These systems filter solids from the spent antifreeze and remove the metal ion contaminants from the solution. The recovered coolant solution often requires blending with an inhibitor package to restore it to its initial state. The two recycling systems work with either ethylene glycol or propylene glycol, but each must be processed separately. These systems are relatively simple to operate, compact (~4’ x 4’), portable (on wheels or can be mounted on a trailer or truck), and are easy to maintain.

The distillation system produces the larger quantity of waste residue. Residue production is approximately 3 gallons of residue per 75 gallons of spent antifreeze. This residue is probably a hazardous

Notes

waste since the lead contamination is often greater than 5 ppm, but only a Toxicity Characteristics Leaching Procedure [TCLP] analysis can determine whether the waste has this hazardous characteristic. The manufacturer of this unit claims that a batch of accumulated residue can itself be processed to further reduce the total volume of waste produced.

The ion exchange unit does not produce any liquid hazardous waste residue; however, it does require filter replacement. Spent filters accumulate metals and may be considered hazardous waste if disposed. Once the ion exchange filters are spent they must be shipped back to the manufacturer for regeneration. The spent filters are not generally treated as a hazardous waste since they are re-used after regeneration and are not disposed. This system is recommended.

Benefits of Establishing an Antifreeze Recycling Program

- Reduces purchasing, materials handling, and waste disposal costs.
- Reduces the mass of materials entering the waste stream.
- The recycling systems can be portable.

Limitations of Establishing an Antifreeze Recycling Program

- The residue from the distillation recycler may be considered hazardous waste.

Install a Wastewater Recycling System & High Pressure Low Volume Washers for Vehicles and Equipment Cleaning

Facilities that regularly wash machinery or fleet vehicles should consider the installation of a wash water recycling system. A wastewater recycling system, or recycling wash rack, removes oils, grease, soils, and most other contaminants from the wash water through a closed loop system, greatly reducing the burden placed on the oil water separators and the wastewater treatment plant. Additionally, water consumption from washing operations can be reduced by an estimated 90 percent. Some systems require construction of an inclined wash pad and installation of a submersible processing pump. If applicable, wash water from current washing operations may need to be tested for metal concentrations to determine if a pre-metal isolation filter for the system is necessary. Depending on the design of the model, an open pool of dirty water is visible.

High Pressure Low Volume (HPLV) washer options should be chosen when selecting the water delivery system for each type of wastewater recycling unit. When combined with the wastewater recycling unit, the total consumption of water can further be reduced. If HPLV washers are not available, they can be purchased separately.

Benefits of Installing a Wastewater Recycling System & High Pressure Low Volume Washers for Vehicles and Equipment Cleaning

- Water consumption and cost can be greatly reduced.
- The strain on the municipal wastewater treatment plant and oil water separators is reduced.

Limitations of Installing a Wastewater Recycling System & High Pressure Low Volume Washers for Vehicles and Equipment Cleaning

- Water recycling equipment is expensive.
- Washing operations must be very high volume in order to be cost efficient.
- An open pool of dirty water may be visible with the recycler

5.4 Metal Working

The following section provides a process description, waste description and a broad range of pollution prevention opportunities that can be implemented to improve metal working operations.

Notes

5.4.1 Process Description

Metal working includes processes that machine, treat, coat, plate, paint and clean metal parts. There are two major segments of the industry: job shops that process materials owned by other parties on a contractual basis, and captive shops that are part of larger manufacturing facilities. Metal fabrication processes are integral parts of aerospace, electronic, defense, automotive, furniture, domestic appliance, and many other industries. Metal working operations involve various metal cutting processes that include the following.

- Turning
- Drilling
- Milling
- Reaming
- Threading
- Broaching
- Grinding
- Polishing
- Planing
- Cutting and shaping

Metal working processes use cutting tools of some sort that travel along the surface of the work piece, shearing away the metal ahead of it. Most of the power consumed in cutting is transformed into heat, the major portion of which is carried away by the metal chips, while the remainder is divided between the tool and work piece.

Turning processes and some drilling are done on lathes, which hold and rapidly spin the work piece against the edge of the cutting tool. Drilling machines are intended not only for making holes, but for reaming (enlarging or finishing) existing holes. Reaming machines using multiple cutting edge tools also carry out this process. Milling machines also use multiple edge cutters, in contrast with the single point tools of a lathe. While drilling cuts a circular hole, milling can cut unusual or irregular shapes into the work piece.

Broaching is a process whereby internal surfaces such as holes or circular, square or irregular shapes, or external surface like keyways are finished. A many-toothed cutting tool called a broach is used in this process. The broach's teeth are graded in size in such a way that each one cuts a small chip from the work piece as the tool is pushed or pulled past the work piece surface, or through a leader hole. Broaching of round holes often gives greater accuracy and better finishing than reaming.

Metal working processes often apply a liquid (or sometimes gases) to the work piece and cutting tool in order to aid in the cutting operation. A metalworking fluid is used:

- To keep tool temperature down, preventing premature wear and damage;
- To keep work piece temperature down, preventing it from being warped;
- To provide a good finish on the work piece;
- To wash away chips; and
- To inhibit corrosion or surface oxidation of the work piece.

Also, metalworking fluids are frequently used to lubricate the tool-work piece interface, in additional to simply cooling it.

Metalworking fluids can be air-blasted, sprayed or drawn through suction onto the tool-work piece interface. Types of fluids include water (either plain or containing an alkali); an emulsion of soluble oil; and "straight" oils (those that are not water-based) such as mineral, sulphurized, or chlorinated oil.

Air drafts are often used with grinding, polishing and boring operations to remove dust and chips, and to cool to a certain extent. Aqueous solutions containing approximately one percent by weight of an alkali such as borax, sodium carbonate or trisodium phosphate exhibit high cooling properties and also provide corrosion prevention for some materials. These solutions are inexpensive and sometimes are used for grinding, drilling, sawing, and light milling and turning operations.

5.4.2 Waste Description

The major wastes from metal working operations are spoiled or contaminated metalworking fluids and metal chips. The spent metalworking fluids are often treated as hazardous wastes because of their metal

Notes

and oil content, as well as other chemical additives such as chlorine, sulfur and phosphorus compounds, phenols, creosols and alkalies. While fresh metalworking fluids contain varying degrees of oil depending on their function, "tramp" hydraulic and lubricating oils also find their way into the fluids during the course of operations. Spent metalworking fluids can be either disposed of or recycled on- or off-site. Metal chips can be collected for recycling.

While metalworking fluid purchases typically account for less than 0.5 percent of the cost of operating a machine tool, the problems that contaminated and degraded fluids can cause can be expensive and troublesome. Proper coolant and cutting oil maintenance is necessary to prevent excessive machine tool downtime, corrosion, and rancidity problems.

Rancid metalworking, perhaps the most common problem, can affect productivity and operator morale. Rancid odors are produced in contaminated fluids due to bacterial action. The odors are especially strong when machines are started up after periods of downtime. The odors are frequently unpleasant enough that the fluid must be changed.

Insufficient maintenance of cutting fluids, especially water-based fluids, can result in work piece and machine tool corrosion. Cutting fluids are needed to protect in-process parts from corrosion, but they will not offer this protection if they have deteriorated due to rancidity, or if they are not maintained at the recommended concentrations. Cutting fluids also must not be allowed to penetrate into gear boxes or into lubricating oil reservoirs, or internal damage to machines can result.

Contamination of water miscible metalworking fluids by "tramp" lubricating and hydraulic oils constitutes one of the major causes of fluid deterioration. The tramp oils interfere with the cooling effect of the fluids, promote bacterial growth, and contribute to oil mist and smoke in the shop environment. Tramp oils impair the filterability of metalworking fluids through both disposable and permanent media filters, and thus inhibit recycling. Tramp oils also contribute to unwanted residues on cutting tools and machine parts.

A serious problem caused by tramp oils is the promotion of bacterial growth, primarily pseudomonas oleovorans, in the metalworking fluid. Such bacteria degrade lubricants, emulsifiers and corrosion inhibitors in the metalworking fluids, and liberate gases, acids and salts as byproducts of their growth. Bacterial growth also interferes with the cooling effect of metalworking fluids.

The tramp oils that most contribute to bacteria growth are hydraulic oils (used in hydraulic assist systems), due to their high water miscibility compared to lubricating oils, and to the phosphorus antiwear compounds they contain, which catalyze microbe growth. Lubricating and machine ramp oils create fewer problems, because their lower miscibility causes them to float to the surface of the coolant.

Solvent wastes resulting from cleaning of parts and equipment also comprise a sizable waste stream. This waste stream is examined in Section 5.5, Cleaning and Degreasing.

5.4.3 Pollution Prevention Opportunities

Pollution prevention opportunities for metal working operations are classified according to the waste management hierarchy in order of relevance; first, source reduction techniques, then secondly, (in-process) recycling options.

5.4.3.1 Source Reduction

As identified in the Waste Description section, the primary problem in metalworking fluid management is contamination with tramp oil and the problems that result from this. While the best solution for tramp oil problems is to prevent the oils from entering the metalworking fluid, some contamination will occur as the machines and their oil seals and wipes wear. This can be reduced through the following activities:

- Preventive Maintenance Program,
- Improved Housekeeping Procedures, and
- Fluid Selection.

Notes

The following provides a brief description of each type of source reduction activity identified to reduce waste metalworking fluid.

Preventive Maintenance Program

Preventive maintenance activities such as periodic seal and wiper replacement can extend the working life of the fluid by preventing contamination with tramp oils. Metalworking fluid performance starts with a preventive maintenance program that includes:

- Use of high quality, stable cutting and grinding fluids;
- Use of demineralized water for mixing purposes;
- Fluid concentration control;
- Control of fluid chemistry (pH, dissolved oxygen, etc.);
- Fluid contamination prevention;
- Periodic sump and machine cleaning;
- Period gasket, wiper and seal inspections and replacements to minimize tramp oil contamination;
- Regular cleaning of metalworking fluid through filtering or centrifugation, in order to minimize microbe growth by controlling tramp oil buildup; and
- Assignment of responsibility for fluid control to one person.

A periodic schedule of metalworking fluid testing can also alert plant staff to deteriorating fluid qualities in time to prevent failure of the fluid. Tests might include analyses for pH, specific component concentration including additives, particulate matter, tramp oil, rust inhibitor, biocide concentrate, and dissolved oxygen. Low pH values indicate low product concentrations, and thus related problems such as increase in metal fines or other suspended solids, and heightened vulnerability to microbe growth and tramp oil contamination.

Improved Housekeeping Procedures

An irritating problem in many shops is the contamination of fluids with trash such as cigarette butts, food or food wrappers that find their way into sumps. Better housekeeping procedures, including operator training and coverage of sumps with screens or solid covers, can help reduce this ongoing problem.

Fluid Selection

It is important to carefully select the metalworking fluid most suitable for the particular application, in order to maximize performance and long fluid life. Fluid selection should be done from an overall, plant-wide perspective, in order to find the best products as well as to minimize the number of different fluids in use. With the broad applications of some high quality fluids, it is sometimes possible to employ only one type in an entire plant, although different applications in the plant may require different proportions of water and concentrate.

In order to make informed choices of fluids, it is important to know not only about the fluids' cutting and grinding abilities, but also about factors such as their resistance to bacterial attack, the residues they leave on machine tools and work-pieces, the corrosion protection they offer, the health dangers they present, such as skin or respiratory irritation, and the environmentally hazardous chemicals they contain. For instance, chemically active lubricants contain chlorine, sulfur or phosphorus may be used. Fluids can also contain phenols, creosols, and harsh alkalies. Tramp oils often carry other hazardous contaminants into metalworking fluid, and can lead to breakdown of the fluid and formation of hydrogen sulfide.

Use of synthetic metalworking fluids can sometimes result in dramatically increased fluid life. Synthetic fluids are made up of chemicals such as nitrites, nitrates, phosphates, and borates. Synthetic fluids contain only zero to one percent soluble oils in the fluid concentrate, compared to 30 to 90 percent soluble oil in non-synthetic metalworking fluid concentrates. While the lubricity of synthetic fluids is lower than many non-synthetic fluids, an advantage of synthetic fluids is that tramp oils are not able to contaminate them as easily as non-synthetic fluids, because they are not able to readily enter the fluid emulsion, which leads to

Notes

breakdown of the fluid's qualities. Many synthetic fluids offer greater thermal stability at high temperatures, resisting oxidation better than non-synthetic fluids.

Gases can sometimes be used in place of coolants, because they can cool work pieces and tools with no work piece contamination. Air is the most frequently used gas, and is employed both in dry cutting and with other fluids. Nitrogen and carbon dioxide are occasionally used as well, but their cost is high and therefore their applications are limited.

Benefits of Source Reduction Opportunities for Metal Working

- Decreased waste generation from the cross-contamination of metal working fluids.
- Increased facility production from decreased down time to replace metal working fluids.
- Lower maintenance and labor costs associated with change-out and cleaning of metal working fluids.
- Reduced operating costs for new metal working fluids.

Limitations of Source Reduction Opportunities for Metal Working

- No limitations were identified.

5.4.3.2 Recycling

Recycling of deteriorated or contaminated fluids can reduce costly hauling and disposal charges. Also, recycling will minimize the need for purchase of high priced fluid concentrates. While many shops engage off-site recycling companies to handle their spent fluids, it is very feasible for larger shops to recycle in-house. Off-site recyclers employ processes to separate oily wastes from water. The water is released to the sewer while the oil is refined or used as fuel. In-house recycling typically focuses on extending the usable life of metalworking fluids, rather than to separate and refine the oils it contains. Continuous in-house filtration of fluids in machine sumps reduces the requirement for new fluids, avoids recycling charges, and saves money by reducing machine downtime for cleaning and coolant recharge.

Methodologies for recycling metalworking fluids include:

- Gravity & Vacuum Filtration,
- Separation By Dissolved Air Flotation,
- Coalescing,
- Hydrocycloning,
- Centrifuging, and
- Pasteurization and Downgrading.

The following provides a brief description of each recycling method identified to reduce the disposal of waste metalworking fluids. Each option can be employed either on-site or by an off-site contractor.

Gravity and Vacuum Filtration

In gravity pressure and vacuum filtration technologies, the waste coolant is passed through a disposable filter to remove solid particles. Diatomaceous earth filters are also used at times, but their adsorptive properties are so high that they can actually remove additives from a metalworking fluid. In skimming separations, the metalworking fluid is allowed to sit motionless until immiscible tramp oil floats to the surface, where it is manually removed or skimmed automatically using oil-attracting belts, floating ropes or wheels. If the oil contaminants are fairly miscible, as is the case with hydraulic oils, or if the coolants in the fluid have emulsified the oils, they will not rise to the surface on their own, and other separation techniques must be used.

Separation by Dissolved Air Flotation

Separation of oil contaminants can sometimes be enhanced through dissolved air flotation. In this method, the metalworking fluid waste stream is put under high pressure and air is injected. When the

Notes

pressure is released, the air comes out of the solution, attaches to the oil and grit in the fluid, and floats it to the surface, where it can be skimmed off.

Coalescing

In coalescing techniques, the fluid is brought into contact with an aleophilic ("oil loving") medium formed into a high surface area shape such as corrugated plates or vertical tubes. Oil droplets impinge on the media and cling to it, eventually coalescing to form large droplets that float to the surface of the fluid and are skimmed off by adjustable weirs. Coalescers are not effective for removing water-miscible hydraulic oils or emulsified lubricating oils, because they do not readily separate from the metalworking fluid.

Hydrocycloning

A hydrocyclone uses centrifugal force to separate solid contaminants from the fluid. Waste fluid is pumped under pressure into the top of a cone-shaped compartment in which a vortex is set up. As the spinning fluid accelerates down the cone, solids are forced to the outer wall. The solids move downward and are discharged, while the clean fluid is forced by back pressure to move upward through the center of the cone. Hydrocyclones can remove particles down to about 5 microns; they cannot, however, efficiently remove small quantities of tramp oil. The advantage of this type of system is that it is mechanically very simple and relatively easy to operate.

Centrifuging

Centrifuging involves mechanical rotation of the metalworking fluid, providing several thousand G's of separating force. Centrifugation is able to remove hydraulic oils and other emulsified tramp oils as well as "free" oils. Low RPM centrifuges are also used as "chip wringers" to separate reusable oil clinging to metal chips.

Pasteurization & Downgrading

Another recycling method is the combination of pasteurization and low speed centrifuging. While this method is promising for certain applications, pasteurization is a tremendously energy intensive process, and is only marginally successful in controlling microbe growth. *Pseudomonas aeruginosa* and *Pseudomonas oleovorans* are two coolant-attacking bacteria that are notoriously hard to kill. Pasteurization can also cause de-emulsification of oils, and if the metalworking fluid has degraded to the point where it has a gray color and emits a hydrogen sulfide odor, pasteurization and centrifugation can only remove the odor and color, but often cannot restore the fluid's lubricity and corrosion inhibition.

Used high performance hydraulic fluid that no longer fulfills exacting specifications can often be downgraded and employed as cutting oils. For instance, certain mil spec hydraulic oils cannot be employed in their original application once their viscosity has dropped due to polymer shearing, but if the oils have been kept clean, additives can be mixed into them to make excellent metalworking fluids.

Benefits of Recycling Metal Working Fluids

- Decreased waste generation from the reuse of metal working fluids.
- Increased facility production from decreased downtime to replace metal working fluids.
- Lower maintenance and labor costs associated with change-out and cleaning of metal working fluids.
- Reduced operating costs for new metal working fluids.

Limitations of Recycling Metal Working Fluids

- Potentially high capital cost depending on the required quality level for the fluid.
- Additional maintenance and labor expense to maintain and operate the recycling equipment.

5.5 Cleaning & Degreasing

The following section provides a process description, waste description and a broad range of pollution prevention opportunities that can be implemented to improve cleaning and degreasing operations.

Notes

5.5.1 Process Description

Cleaning and degreasing processes are applied in a variety of industries to remove dirt, soil, and grease (often referred to together as soil). Cleaning and degreasing are done as a final step in manufacturing a product, as a preliminary step in preparing a surface for further work (e.g., electroplating), or as a cleaning step for forms or equipment between uses.

In preparing metals for finishing, the cleaning process is the most important. Finishing processes depend on a clean surface as a foundation. In selecting a cleaning operation, the process to be performed, as well as the type of metal and contaminant, are important considerations.

Many parts manufacturers clean their own products, whereas others send them out to companies with the sole business of parts cleaning. Currently, the common cleaning processes for metals include liquid solvent cleaning (cold cleaning) and vapor degreasing. Liquid solvent cleaning usually is done in large tanks containing solvent solutions in which the parts are immersed. This usually is an automated process. Vapor degreasing generally involves chlorinated solvents such as methylene chloride, 1,1,1-trichloroethane, trichloroethylene, or perchloroethylene. Parts are immersed in the vapors of these solvents for degreasing. In the dry cleaning industry, perchloroethylene is commonly used for washing clothes.

In the electronics industry, parts generally are cleaned after soldering to remove contaminants. These contaminants originate from the fluxes used to promote the wetting necessary for good solder joints to be formed. The flux residue can interfere with future processes and reduce the aesthetics and reliability of a part. Traditionally, chlorinated, fluorinated, and other halogenated solvents have been used to remove these residues.

5.5.2 Waste Description

Cleaning and degreasing technologies generally involve applying some form of a solvent to a part. Solvents are used in virtually every industry to some extent. During the cleaning process, there is often an environmental problem with air emissions from the solvents. After the cleaning process, a waste stream composed of the solvent combined with oil, debris, and other contaminants is left for disposal.

Halogeneated solvents, which are known for their stability, ease of drying, and effectiveness in removing oils, have detrimental environmental effects. Solvent evaporation has been investigated for its role in stratospheric ozone depletion, global warming potential, and ground smog formation.

Using halogeneated solvents to clean and degrease not only generates hazardous solvent wastes but also create work conditions that may be detrimental to the health and safety of workers. Questions concerning safety and health issues include chronic and acute effects, carcinogenicity, and teratogenicity.

Because environmental laws restrict the use of such solvents, many industries are attempting to reduce or eliminate their use of halogenated solvents. Additional restrictions can be expected in the future.

5.5.3 Pollution Prevention Opportunities

Pollution prevention opportunities for cleaning and degreasing operations are classified according to the waste management hierarchy in order of relevance; first, source reduction techniques, then secondly, (in-process) recycling options.

5.5.3.1 Source Reduction

Cleaner technologies now exist or are being developed that would reduce or eliminate the use of solvents for many cleaning and degreasing operations. There are two main focuses in describing cleaner technologies for cleaning and degreasing:

- *Alternative Cleaning Solutions* - (e.g., aqueous-based) can directly replace existing solvents with little or no process modifications.
- *Process Changes* - use different technologies for cleaning or eliminate the need for cleaning. The capital costs may be greater for process changes, but the reduced cost of buying and disposing of solvents often makes up for this.

Notes

Both alternative cleaning solutions and process changes may have limitations that should be carefully evaluated by potential users for their specific applications.

Alternative Cleaning Solutions

Alternative cleaning and degreasing solutions are non-ozone depleting or lower ozone depleting substances that are non-hazardous; have low toxicity, low odor, and high flash points; produce low emissions of volatile organic compounds; and are effective for removing contaminants. Alternative cleaning solutions present a sound option to reduce or eliminate the use of hazardous cleaning and degreasing chemicals from the workplace through source reduction.

The following seven common alternative cleaning solutions are presented below: (1) aqueous cleaners, (2) semi-aqueous cleaners, (3) petroleum hydrocarbons, (4) hydrochlorofluorocarbons (HCFCs), (5) miscellaneous organic solvents, (6) supercritical fluids, and (7) carbon dioxide snow.

Exhibit 5.1 describes each available cleaner technology. It lists the pollution prevention benefits, reported application, operational benefits, and limitations of each technology to allow preliminary identification of those technologies that may be applicable to specific situations.

Aqueous Cleaners

Aqueous cleaning and degreasing can be performed for a wide variety of applications, including those that once were considered the domain of vapor degreasing or cold solvent cleaning. However, some ferrous metals may exhibit flash rusting in aqueous environments; therefore, such parts should be tested prior to full-scale use.

Many kinds of aqueous cleaning products are available. Thus, some investigation is required to find cleaners that are most effective against the contaminants typically encountered and to find cleaners that give the best performance with the process equipment that will be used. Whereas solvents depend largely on their ability to dissolve organic contaminants on a molecular level, aqueous cleaners utilize a combination of physical and chemical properties to remove macroscopic amounts of organic contaminants from a substrate. Aqueous cleaning is more effective at higher temperatures, and normally is performed above 120°F using suitable immersion, spray, or ultrasonic washing equipment. For this reason, good engineering practices and process controls tend to be more important in aqueous cleaning than in traditional solvent cleaning to achieve optimum and consistent results.

When switching from solvent cleaning to aqueous cleaning, one should be aware that parts usually need to be rinsed and will remain wet for some time unless action is taken to speed up the drying process.

The ability of aqueous cleaners to remove most contaminants has been demonstrated in numerous tests. Aqueous cleaners are capable of removing inorganic contaminants, particulates, and films. They also exhibit considerable flexibility in application because their performance is strongly affected by formulation, dilution, and temperature. The formulation that gives the best results can be found through some investigation, and the user can select the dilution factor and temperature that give the best results.

Benefits of Aqueous Cleaners

- The primary pollution prevention benefit of aqueous cleaners is that they are non-ozone depleting and may not contain VOCs.
- Aqueous cleaners that are non-hazardous initially remain so unless they become contaminated with hazardous materials during cleaning operations.
- In some cases, spent cleaner can be treated to remove contaminants, which may allow them to be discharged to sewers, provided that the effluents meet local discharge requirements.
- Aqueous cleaners are nonflammable, therefore, there is no risk of fire.
- Aqueous cleaners are available in a wide variety of formulations, strengths, and materials compatibility properties.

Exhibit 5.1: Available Technologies for Alternatives to Chlorinated Solvents for Cleaning and Degreasing

Technology Type	Pollution Prevention Benefits	Reported Application	Operational Benefits	Limitations
Aqueous Cleaners	• No ozone depletion potential • May not contain VOCs • Many cleaners reported to be biodegradable	• Excellent for removing inorganic and polar organic contaminants • Used to remove light oils and residues left by other cleaning processes • Used to remove heavy oils, greases, and waxes at elevated temperatures (>160°F)	• Remove particulates and films • Cleaner performance changes with concentration and temperature, so process can be tailored to individual needs • Cavitate using ultrasonics	• Nonflammable and nonexplosive, relatively low health risks compared to solvents; consult Material Safety Data Sheet (MSDS) for each cleaner • Contaminant and/or spent cleaner may be difficult to remove from blind holes and crevices • May require more floor space, especially if multi-stage cleaning is performed in line • Often used at high temperatures (120 to 200°F) • Metal may corrode if part not dried quickly; rust inhibitor may be used with cleaner and rinsewater • Stress corrosion cracking can occur in some polymers
Semi-Aqueous Cleaners	• Some have low vapor pressure and so have low VOC emissions • Terpenes work well at low temperatures, so less heat energy is required • Some types of cleaners allow used solvent to be separated from the aqueous rinse for separate recycling or disposal	• High solvency gives cleaners good ability for removing heavy grease, waxes, and tar • Most semi-aqueous cleaners can be used favorably with metals and most polymers • NMP used as a solvent in paint removers and in cleaners and degreasers	• Rust inhibitors can be included in semi-aqueous formulations • Nonalkaline pH; prevents etching of metals • Low surface tension allows semi-aqueous cleaners to penetrate small spaces • Glycol others are very polar solvents that can remove polar and nonpolar contaminants • NMP used when a water-miscible solvent is desired • Esters have good solvent properties for many contaminants an are soluble in most organic compounds	• NMP is a reproductive toxin that is transmitted dermally; handling requires protective gloves • Glycol ethers have been found to increase the rate of miscarriage • Mists of concentrated cleaners (especially terpenes) are highly flammable; hazard is overcome by process design or by using as water emulsion • Limonene-based terpenes emit a strong citrus odor that may be objectionable • Some semi-aqueous cleaners can cause swelling and cracking of polymers and elastomers • Some esters evaporate too slowly to be used without including a rinse and/or dry process • May be aquatic toxins

Exhibit 5.1: Available Technologies for Alternatives to Chlorinated Solvents for Cleaning and Degreasing (cont.)

Technology Type	Pollution Prevention Benefits	Reported Application	Operational Benefits	Limitations
Petroleum Hydrocarbons	• Produce no wastewater • Recyclable by distillation • High grades have low odor and aromatic hydrocarbon content (low toxicity) • High grades have reduced evaporative loss	• Used in applications where water contact with parts is undesirable • Used on hard-to-clean organic contaminants, including heavy oil and grease, tar, and waxes • Low grades used in automobile repair and related service shops	• No water used, so there is less potential for corrosion of metal parts • Compatible with plastics, most metals, and some elastomers • Low liquid surface tension permits cleaning in small spaces	• Flammable or combustible, some have very low flash points, so process equipment must be designed to mitigate explosion dangers • Slower drying times than chlorinated solvents • The cost of vapor recovery, if implemented, is relatively high
Hydrochloro-fluorocarbons (HCFCs)	• Lower emissions of ozone-depleting substances than CFCs • Produce no wastewater	• Used as near drop-in replacements for CFC-113 vapor degreasing • Compatible with most metals and ceramics, and with many polymers • Azeotropes with alcohol used in electronics cleaning	• Short-term solution to choosing an alternative solution that permits use of existing equipment • No flash point	• Have some ozone depletion potential and global warming potential • Incompatible with acrylic, styrene, and ABS plastic • Users must petition EPA for purchase, per Section 612 of CAAA
Miscellaneous Organic Solvents	• Do not contain halogens, so they do not contribute to ozone depletion • Most are considered biodegradable • Generate no waste-water when used undiluted	• Most are used in small batch operations for spot-cleaning	• Alcohols are polar solvents and are good for removing a wide range of inorganic and organic contaminants; soluble in water and may be used to accelerate drying • Ketones have good solvent properties for many polymers and adhesives; they are soluble in water and may be useful for certain rapid drying operations • Vegetable oils are used to remove printing inks and are compatible with most elastomers • Lighter alcohols and ketones have high evaporation rates and therefore dry quickly	• Most evaporate readily and therefore contribute to smog • Alcohols and ketones have low flash points and present a fire hazard • Inhalation of these solvents can present a health hazard • Some have vapor pressures that are too high to be used in standard process equipment • MEK and MIBK are on EPA list of 17 substances targeted for use reduction

Exhibit 5.1: Available Technologies for Alternatives to Chlorinated Solvents for Cleaning and Degreasing (cont.)

Technology Type	Pollution Prevention Benefits	Reported Application	Operational Benefits	Limitations
Supercritical Fluids (SCFs)	• Nonpolluting when CO_2 is used as the supercritical fluid • Generate no wastewater • Use natural or industrial sources of CO_2, so no net production of carbon	• Remove organic contaminants of moderate molecular weight and low polarity • Precision clean instrument bearings, electromechanical assemblies, direct access storage devices, optical components, polymeric containers, porous metals, ceramics • Low viscosity and high diffusivity permit cleaning in very small cracks and pore spaces	• Compatible with metals, ceramics, and polymers such as Teflon™, high-density polyethylene, epoxies, and polyimides • No solvent residue left on part • May be very useful for cleaning oxygen equipment • Solvent properties can be altered by adding a cosolvent	• Cosolvents used to improve the solvent power of CO_2 may have a pollution potential • Danger of a pressure vessel explosion or line rupture • Causes swelling in acrylate, styrene polymers, neoprene, polycarbonate, and urethanes • Components sensitive to high pressures and moderate temperatures should not be cleaned by SCF methods • Ineffective in removing inorganic and polar organic contaminants; for example, does not remove fingerprints
Carbon Dioxide Snow	• No polluting emissions released • Replaces CFCs and solvents • Does not generate wastewater • Uses natural or industrial sources of CO_2, so no net production of CO_2 occurs • Carries contaminants away in a stream of inert CO_2	• Cleans critical surfaces on delicate fiber optic equipment • Cleans radioactive-contaminated components • Used in hybrid circuits to remove submicron particles • Used on the largest, most expensive telescopes • Removes submicron particles and light oils from precision assemblies • Removes light fingerprints from silicon wafers and mirrors • Prepares surface for surface analysis	• Generates no media waste, thus no media disposal cost • Does not create thermal shock • Is nonflammable and nontoxic • Noncorrosive • Leaves no detectable residue • Can penetrate narrow spaces and nontrubulent areas to dislodge contaminants • Adjustable flake size and intensity • More effective than nitrogen or air blasting • Can clean hybrid circuits without disturbing the bonding wire	• CO_2 must be purified • Requires avoidance of long dwell times • Particulates such as sand may be carried by the gas stream and scratch the surface • Heavier oils may require the addition of chemicals and heat to be completely removed

Notes

Limitations of Aqueous Cleaners

- Some aqueous cleaners contain organic substances that may be hazardous.
- Aqueous cleaners are generally not as fast or effective as traditional halogenated solvents.
- Material Safety Data Sheets (MSDSs) for individual products should be consulted before use.
- Metal corrosion may occur if parts cannot be dried quickly enough.
- Stress corrosion cracking can occur in some polymers as a result of contact with alkaline solutions.
- Compatibility of the product/process with water must be carefully investigated.

Semi-Aqueous Cleaners

Semi-aqueous cleaners comprise a group of cleaning solutions that are composed of natural or synthetic organic solvents, surfactants, corrosion inhibitors, and other additives. The term semi-aqueous refers to the use of water in some part of the cleaning process, such as washing, rinsing, or both. Semi-aqueous cleaners are designed to be used in process equipment much like that used with aqueous cleaners. The commonly used semi-aqueous cleaners include water-immiscible types (terpenes, high-molecular-weight esters, petroleum hydrocarbons, and glycol ethers) and water-miscible types (low-molecular-weight alcohols, ketones, esters, and organic amines).

Semi-aqueous cleaners are designed to be water-rinsable or non-water-rinsable. After washing in a water-rinsable type, cleaned parts may be rinsed in water to remove residue. If a non-water-rinsable type is used, cleaned parts may be rinsed in alcohol, such as isopropyl alcohol, or other organic solvent, or the residue may be allowed to remain on the parts. If rinsing is the desired option, it is common practice to rinse in secondary tank to capture dragout cleaner.

If the semi-aqueous cleaner is diluted with water to form an emulsion, the cleaner can be coalesced into its aqueous and nonaqueous components by gravity separation or by advanced membrane separation techniques. These techniques permit used cleaner to be recycled back into the wash tank or discharged for treatment and disposal. Vacuum distillation can be used to purify single-component solvents. Reclaimed rinsewater also can be reused or discharged.

Proper use of these cleaners is required to reap their full pollution prevention benefits. Good engineering design is essential so that air emissions can be kept low. For example:

- The cleaning bath should be operated at the minimum temperature where acceptable cleaning performance is obtained.
- Low-vapor-pressure cleaning agents should be used.
- Dragout should be minimized by the use of air knives.
- The air exhaust rate should be maintained at a minimum level.

Terpene semi-aqueous cleaners are normally used at ambient temperature or heated to no higher than 90°F. However, many high-molecular-weight esters have flash points in excess of 200°F. Also, the glycol ethers generally have flash points above 200°F and can be heated for improved solvency.

N-methyl-2-prrylidone (NMP) has been used for removing cured paint and hence is a substitute for methylene chloride. NMP is better suited for immersion tanks than other application methods, because elevated temperatures are required to enhance its chemical activity. Usually, NMP immersion cleaning or paint removing is done at 155°F in an open tank, or up to 180°F if a mineral oil seal is present.

In general, the semi-aqueous cleaners have excellent solvency for a number of difficult contaminants, such as heavy grease, tar, and waxes. The cleaners have low surface tension, which decreases their contact angles and allows them to penetrate small spaces such as crevices, blind holes, and below-surface-mounted electronic components. Rinsing is necessary to avoid leaving a residue on the cleaned parts. If water rinsing is performed, the parts must be dried.

Notes

Benefits of Semi-Aqueous Cleaners

The primary pollution prevention benefit of semi-aqueous cleaners is that they are non-ozone depleting. However, they may be partly or completely composed of VOCs. In addition, their use commands substantially more concern about aquatic toxicity and human exposure than does the use of aqueous cleaners. Most semi-aqueous cleaners are reported to be biodegradable. One benefit of semi-aqueous cleaners is that distillation and membrane filtration technologies are being developed that will permit recycling and reuse of the products.

The following benefits have been identified with semi-aqueous cleaners.

- May be more aggressive in removing heavy organic contaminants.
- May have lower corrosion potential with water-sensitive metals.
- Penetrate small spaces more easily because they have lower surface tensions.
- Semi-aqueous cleaners are noncorrosive to most metals and generally are safe to use with most plastics.

Limitations of Semi-Aqueous Cleaners

- Mists of concentrated semi-aqueous cleaners can be ignited at room temperature.
- Terpenes have flash points as low as 115°F, therefore, the low flash point restricts safe operating temperatures to no more than 90°F in some cases.
- Strong odors may become objectionable to workers, thus requiring additional ventilation in areas where they are used.
- Reproductive health problems associated with glycol ethers are a cause for serious concern.
- Although semi-aqueous cleaners are biodegradable, the capacity of treatment facilities to treat the wastewater properly should be explored.
- Terpenes generally are not recommended for cleaning polystyrene, PVC, polycarbonate, low-density polyethylene, and polymethylpentene; nor are they compatible with the elastomers natural rubber, silicone, and neoprene. Likewise, NMP dissolves or degrades ABS, Kynar™, Lexan™, and PVC and it causes swelling in Buna-N, Neoprene, and Viton™.

Petroleum Hydrocarbons

Hydrocarbon solvents dissolve organic soils. Some solvents that have flash points as low as 105°F must be used at ambient temperature to avoid a fire hazard. Many high-grade hydrocarbon solvents have flash points above 140°F. Higher flash points are achieved using higher-molecular-weight compounds. Some formulations contain non-petroleum additives such as high-molecular-weight esters to improve solvency and raise the flash point.

When the cleaning lifetime of a hydrocarbon solvent expires, the entire bath must be replaced. Used hydrocarbon solvents commonly are blended with other fuels and burned for energy recovery.

Petroleum hydrocarbons are available in two grades, the basic petroleum distillates and the specialty grade of synthetic paraffinic hydrocarbons. Products of the petroleum distillate grade include mineral spirits, kerosene, white spirits, naphtha, Stoddard Solvent, and PD-680 (military designation; types I, II, and III). These are technologically less advanced, as they contain components that have a broad range of boiling points and may include trace amounts of benzene derivatives and other aromatics.

Petroleum hydrocarbons typically are used when water contact with the parts is undesirable. Cleaning with petroleum distillates lends itself to simple, inexpensive one-step cleaning in situations where a high level of cleanliness is not essential.

Benefits of Petroleum Hydrocarbons

The primary pollution prevention benefits of petroleum hydrocarbon solvents are that they produce no wastewater and they are recyclable by distillation. Paraffinic grades have very low odor and aromatic

Notes

content and low evaporative loss rates. However, planned recovery of VOCs is an important part of pollution prevention if these solvents are to be used.

The following benefits of petroleum hydrocarbon solvents have been identified.

- No water is used with petroleum hydrocarbon cleaners, so there is no potential for water corrosion or for water to become trapped in cavities.
- Hydrocarbon solvents can easily be recycled on- or off-site.

Limitations of Petroleum Hydrocarbons

- Petroleum hydrocarbons are flammable or combustible, and some have very low flash points, as low as 105°F.
- Process equipment, including drying ovens, must be designed to mitigate explosion dangers.
- The toxicity level of hydrocarbon solvents is considered low: 8-hour PELs for Stoddard Solvent and VM & P naphthas are 100 ppm and 400 ppm, respectively.
- Residues may remain on the parts long after they are cleaned.
- Hydrocarbons are VOCs, and hence they are photochemical smog producers.
- Businesses choosing this alternative must consider the expenses of possible requirements for recovering VOCs from exhaust equipment.

Hydrochlorofluorocarbons (HCFCs)

HCFCs are designed to be near term replacements to CFC-113 for vapor degreasing. However, the properties of the HCFCs differ somewhat from those of CFC-113, so that vapor degreasing equipment that was designed for CFC-113 would have to be retrofitted to accommodate HCFCs.

It is important to realize that HCFCs are being developed for interim use only. The London Amendments to the Montreal Protocol call for a ban of HCFCs between 2020 and 2040. The main reason for choosing this technology is to enable an existing CFC-113 vapor degreasing system to continue in use until a long-term alternative is found. The long-term alternative could be a completely enclosed vapor degreaser or a non-HCFC technology discussed in this section.

Hydrochlorofluorocarbons, or HCFCs, were developed to lower emissions of ozone-depleting substances that are used in cleaning, foam-blowing agents, and refrigerants. Although HCFCs accomplish the goal of reducing emissions, they have some ozone depleting potential; about 0.15 for HCFC-141b and 0.033 for HCFC-225cb--relative to CFC-113, which is 1.0. Therefore, HCFC-141b depletes ozone at a rate about 6 to 7 times less than that of CFC-113, but about equal to that of TCA. The ozone depletion rate for HCFC-225cb is about 30 times lower than that of CFC-113.

Benefits of HCFC's

- HCFCs provide a short-term solution to choosing an alternative solvent and allow use of existing equipment.

Limitations of HCFC's

- Because HCFCs have lower boiling points than CFC-113, HCFC solvent vapors may be lost too quickly in older degreasers, and these vapors may be a health risk.
- Some emission control features may have to be added, such as extending freeboard height, adding secondary condensers, or completely enclosing the system.
- HCFC cleaners are incompatible with acrylic, styrene, and ABS plastic.

Notes

Miscellaneous Organic Solvents

This group covers a wide range of solvents that may be beneficial as a replacement technology, particularly on a small scale, such as bench-top or spot cleaning. Types of miscellaneous organic solvents that are commonly used include alcohols, liner methyl siloxanes, vegetable oils, ketones, esters, and ethers.

Alcohols are polar solvents and have good solubility for a wide range of inorganic and organic soils. The lighter alcohols are soluble in water and may be useful in drying operations.

Ketones have good solvent properties for many polymers and adhesives. Lighter ketones, such as acetone, are soluble in water and may be useful for certain rapid drying operations. Heavier ketones, such as acetophenone, are nearly insoluble in water. Ketones generally evaporate completely without leaving a residue. Some ketones such as methyl ethyl ketone (MEK) and methyl isobutyl ketone (MIBK) once were widely used, however, they now are considered Hazardous Air Pollutants (HAPs) and thus are not favorable solvent substitutes.

Esters and ethers also have good solvent properties. Low-molecular-weight compounds dry readily without leaving a residue.

A new class of organic solvents is the volatile methyl siloxanes. Their molecular structure is either linear or cyclic. The linear methyl siloxanes are nonpolar and are most effective in removing nonpolar and nonionic contaminants. The most volatile methyl siloxane can function as a drying agent.

Vegetable oils are finding use in removing printing inks. They are also compatible with elastomers. Vegetable oils contain triglycerides of fatty acids, typically oleic, linoleic, palmitic, and stearic fatty acids.

Benefits of Miscellaneous Organic Solvents

The miscellaneous organic solvents do not contain halogens; therefore, they do not contribute to ozone depletion. However, all of these compounds are VOCs and evaporate readily, thereby contributing to smog formation. The solvents discussed in this section normally are used in small quantities for niche applications.

Most of these solvents are well developed and some have been used as cleaners for a century or more. Many of them have reached their full potential for development. The lighter alcohols and ketones have high evaporation rates and, therefore, fast drying times. The more volatile solvents are best suited for spot cleaning, where rapid evaporation is desired. Users should consult MSDS literature for safe handling practices.

The benefits of each type of miscellaneous solvent are discussed below.

- Ethyl and isopropyl alcohols are commonly used in spot cleaning and touch-up applications. Because they are slightly polar, they tend to be good, general-purpose solvents for nonpolar hydrocarbons, polar organic compounds, and even ionic compounds. Ethyl and isopropyl alcohols are fully miscible in water.
- Benzyl alcohol is a solvent for gelatin, casein (where heated), cellulose acetate, and shellac, and is used as a general paint softener (when heated). The good solvent properties of benzyl alcohol can be enhanced by heating; its flash point is 101°C, or 213°F (closed cup). Mixtures composed of 90% benzyl alcohol and 10% benzoic acid are also used for solvent cleaning applications. Pure benzyl alcohol is 4% soluble in water, but is miscible in lighter alcohols and with ether.
- Furfuryl alcohol forms a miscible, but unstable solution in water. It is used as a general cleaning solvent and paint softener. Furfuryl alcohol is soluble in water and is miscible in lighter alcohols and in ether. The solvent properties of furfuryl alcohol can be enhanced by moderate heating; its flash point is 75°C, or 167°F (closed cup).
- N-butyl alcohol is a solvent for fats, waxes, resins, shellac, varnish, and gums. It is 9% soluble in water at 25°C, but forms an azeotrope with water (63% n-butyl alcohol/37% water) that boils at 92°C. N-butyl alcohol is miscible in lighter alcohols, ether, and many other organic substances.
- N-butyl acetate is a solvent used in lacquer production. It is less than 1% soluble in water at 25°C. The solvent activity of n-butyl acetate is enhanced by mixing with n-butyl alcohol. A mixture of

Notes

80% n-butyl acetate and 20% n-butyl alcohol is used to dissolve oil, fats, waxes, metallic resinates, and many synthetic resins such as vinyl, polystyrene, and acrylates. Also, the mixture dissolves less highly polymerized alkyd resins and shellac.

- Ethyl lactate is another ester that has useful solvent properties. The use of ethyl lactate is relatively new to cleaning and degreasing. Recently, it has been shown to have good solubility for skin oils, cutting fluids, coolants, mold release compounds, and marking inks. Ethyl lactate has a flash point of 47°C, or 117°F (closed cup).
- Acetone is a solvent for fats, oils, waxes, resins, rubber, some plastics, lacquers, varnishes, and rubber cements. It is completely miscible in water and in most organic solvents.
- Volatile methyl siloxanes have been found to remove contaminants in precision metalworking, optics, and electronics processing. They remove cutting fluids, greases, and silicone fluids. They have low odor and evaporate in the range of butyl acetate, without leaving a residue. They can be used in cleaning equipment designed for use with isopropyl alcohol.

Limitations of Miscellaneous Organic Solvents

Limitations of some of these cleaners is that some have vapor pressures that are too high to be used in standard process equipment, whereas others evaporate too slowly to be used without including a rinse and/or dry process. The following specific limitations have been noted with these solvents.

- Low flash points that present a fire hazard.
- Inhalation of these solvents can present a health hazard.
- The more volatile solvents will not be able to meet VOC emission restrictions in highly regulated areas of the country.

Supercritical Fluids

Supercritical fluids (SCF) cleaning exploits the marked improvements of the solvent power of CO_2 or other substances after they undergo a phase transition from a gas or liquid phase to become supercritical fluids. Supercritical CO_2 has been used very successfully to remove organic soils of moderate molecular weight and low polarity. Supercritical CO_2 does not give good results for soils that are ionic or polar in nature, such as fingerprints.

SCF cleaning is probably best reserved for removing small amounts of soil from parts that require a high degree of cleanliness. For example, precision cleaning operations have been performed successfully on the following devices: gyroscope parts, accelerometers, thermal switches, nuclear valve seals, electromechanical assemblies, polymeric containers, optical components, porous metals, and ceramics.

The main advantage of using carbon dioxide (CO_2) as a supercritical fluid (SCF) is that CO_2 is derived from the atmosphere and is not created for use as a solvent. Furthermore, the small quantity of CO_2 released would have an insignificant effect on global warming. On the other hand, cosolvents, which may be used to improve the solvent power of CO_2, may have pollution potential and should be investigated before use. Energy is required to operate the pumps and temperature control equipment that are needed in supercritical cleaning equipment.

Benefits of Supercritical Fluids

- No solvent waste stream.
- Low viscosity and high diffusivity permit SCFs to clean within very small cracks and pore spaces.
- The solvent power of SCFs is pressure-dependent, making it possible to extract different soils selectively and precipitate them into collection vessels for analysis.
- SCFs are compatible with metals, ceramics, and polymers such as Teflon™, high-density polyethylene, epoxies, and polyimides.

Notes

Limitations of Supercritical Fluids

- The only major safety concern is the danger of a pressure vessel or line rupture.
- SCFs cause swelling in acrylates, styrene polymers, neoprene, polycarbonate, and urethanes.
- Components that are sensitive to high pressures and temperatures should not be cleaned by SCF methods.
- SCFs are not effective in removing inorganic and polar organic soils, nor do they remove loose scale or other particulates.

Carbon Dioxide Snow

CO_2 snow gently removes particles smaller than 10 microns in diameter down to 0.1 micron that are difficult to remove using high-velocity liquid nitrogen. It is used to remove light oils and fingerprints from mirrors, lenses, and other delicate surfaces, and from precision assemblies, without scratching the surface.

Cleaning action is performed when the snow particles impact a contaminated surface, dislodge adherent contaminant particles, and carry them away in the gas stream. The process is effective in removing very small (submicron) particles, where fluid drag normally restricts the performance of liquid phase cleaning. The CO_2 snow cleaning process is also believed to attack hydrocarbon film by dissolving hydrocarbon molecules in a temporal liquid CO_2 phase at the film-substrate interface. The dissolved film is then carried away by subsequent flow of snow and gas.

CO_2 snow can clean hybrid circuitry and integrated circuits without disturbing the bonding wires. This unique ability cannot be duplicated by any other cleaning mechanism. In the disc drive industry, CO_2 snow is used to remove particles from discs without damage to the operation.

The process is used to remove paste fluxes in soldering. If the grease cannot be removed with CO_2 snow alone, combination of CO_2 snow and ethyl alcohol is effective, followed by CO_2 snow alone to remove the impurities from the alcohol.

CO_2 is used to remove hydrocarbons and silicone grease stains from silicon wafers. Wafers artificially contaminated with a finger print, a nose print, and a thin silicone grease film were found to have surface hydrocarbon levels 25 to 30% lower after CO_2 snow cleaning than the original wafer surfaces.

CO_2 snow is also used to clean surfaces exposed to contaminants in air prior to surface analysis. The process was found to work better than solvents to clean vacuum components. Because the aerosol could penetrate narrow spaces, no disassembly was required, greatly shortening the time required for cleaning. Furthermore, CO_2 cleaning is effective on some plastic parts that cannot be cleaned by solvents.

Chilled CO_2 is a nontoxic, inert gas that replaces solvent use to eliminate ozone-depleting substances. Because the CO_2 is recycled, there is no need for disposal, nor is any wastewater produced. It generates no hazardous emissions.

Benefits of Carbon Dioxide Snow

- CO_2 snow performs ultrapure cleaning of light oils down to submicron size on the most delicate, sensitive materials ranging from bonding wires to precision mirrors in telescopes.
- The CO_2 snow crystals generated by the snow gun are extremely gentle.
- The CO_2 snowflakes are adjustable to a wide range of size and intensity.
- The process does not create thermal shock, is nonflammable and nontoxic, and causes no apparent chemical reactions.
- Cleaning by CO_2 snow is noncorrosive and leaves no residue.
- CO_2 snow does not crack glass or other ceramics.
- No media separation system is needed, nor is there a media disposal cost.
- CO_2 snow can penetrate the nonturbulent areas to dislodge contaminants and can be used on

Notes

components without disassembly that otherwise must be disassembled because the aerosol penetrates narrow spaces.

Limitations of Carbon Dioxide Snow

- Heavier oils, alone or mixed with light oils, may require chemical precleaning and/or heating to be completely removed.
- The CO_2 must be purified because of its tendency to dissolve contaminants from the walls of tanks in which it is stored. Purification equipment adds expense to the CO_2 snow cleaning process.
- When surfaces are excessively chilled by long dwell times, airborne impurities may condense and settle on the clean surface.
- CO_2 snow has low Mohs hardness and will not scratch most metals and glasses. However, hard particulates such as sand that may be present on a surface potentially could cause scratching when carried by the gas stream.

Process Changes

Process changes can either eliminate the need for cleaning or apply techniques that eliminate or reduce the use of solvents.

Another possibility is to combine an alternative cleaning solution with a process change. Sometimes the cleaning effectiveness of a solvent substitute is not adequate, and a process change can improve the effectiveness of the substitute. In such a case, a process change is combined with solvent substitution to create a cleaner technology. In other cases, the process change may involve reducing the amount of solvent or making it amenable to recycling.

The following five common process changes for cleaning and degreasing are presented below:

- Add-on controls to existing vapor degreasers,
- Completely enclosed vapor cleaner,
- Automated aqueous cleaning,
- Aqueous power washing, and
- Ultrasonic cleaning.

Exhibit 5.2 summarizes the Pollution Prevention Benefits, Reported Application, Operational Benefits, and Limitations of each to provide a range of technologies to allow preliminary identification of those that may be applicable to specific situations.

Add-on Controls to Existing Vapor Degreasers

Add-on controls are features that can be incorporated into an existing degreaser to reduce air emissions. These process changes include the following:

- Operating controls,
- Covers,
- Increased freeboard height,
- Refrigerated freeboard coils, and
- Reduced room draft/lip exhaust velocities.

Operating Controls

The add-on controls limit air emissions through changes in operating practices or through equipment modifications. Operating controls are practices that reduce work load-related losses. These can be easily incorporated into the operating procedure, but their impact on emission reduction is significant. Air emissions can be reduced by slowing down the rate of entry of the work load into the (open-top vapor

Exhibit 5.2: Available Technologies for Cleaning and Degreasing

Cleaning/Degreasing Technology	Pollution Prevention Benefits	Reported Application	Operational Benefits	Limitations
Add-on Controls to Existing Vapor Degreasers	• Reduce solvent air emissions	• Retrofitted on existing vapor degreasers	• Allow gradual phase-in of emission controls • Major process modifications not required • Cleaning principle remains the same • Relatively inexpensive	• Reduce but cannot eliminate air emissions • Performance depends on other features of existing degreaser • Dragout on parts cannot be eliminated
Completely Enclosed Vapor Cleaner	• Virtually eliminates solvent air emissions	• Same as conventional open-top vapor degreasers	• Virtually eliminates air emissions and workplace hazards • Cleaning principle remains the same; user does not have to switch to aqueous cleaning • Significant recovery of solvent • Reduced operating costs	• High initial capital cost • Slower processing time • Relatively high energy requirement
Automated Aqueous Cleaning	• Eliminates solvent use by using water-based cleaners	• Cleaning of small parts	• Eliminates solvent hazards • Reduces water consumption • Cleaning chemicals are reused • Easy to install and operate	• May not be able to replace vapor degreasing for some delicate parts, and requires more space than vapor degreasing • Wastewater treatment required • Relatively higher energy requirement
Aqueous Power Washing	• Eliminates solvent use by using water-based cleaners	• Cleaning of large and small parts	• Eliminates solvent hazards • Reduces cleaning time	• Pressure and temperature may be too great for some parts • Wastewater treatment required

Exhibit 5.2: Available Technologies for Cleaning and Degreasing (cont.)

Cleaning/Degreasing Technology	Pollution Prevention Benefits	Reported Application	Operational Benefits	Limitations
Ultrasonic Cleaning	• Eliminates solvent use by making aqueous cleaners more effective	• Cleaning of ceramic, aluminum, plastic and metal parts, electronics, glassware, wire, cable, rods	• Eliminates solvent hazards • Can clean in small crevices • Cost effective • Faster than conventional methods • Inorganics are removed • Neutral or biodegradable detergents can often be employed	• Part must be immersible • Testing must be done to obtain optimum solution and cavitation levels for each operation • Thick oils and grease may absorb ultrasonic energy • Energy required usually limits parts sizes • Wastewater treatment required if aqueous cleaners are used
Low-Solids Fluxes	• Eliminates need for cleaning and therefore eliminates solvent use	• Soldering in the electronics industry	• Eliminates solvent hazards • Little or no residue remains after soldering • Closed system prevents alcohol evaporation and water absorption	• Conventional fluxes are more tolerant of minor variations in process parameters • Possible startup or conversion difficulties • Even minimal residues are unacceptable in many military specifications
Inert Atmosphere Soldering	• Eliminates need for flux and therefore eliminates solvent cleaning	• Soldering in the electronics industry	• Eliminates solvent hazards • Economic and pollution prevention benefits from elimination of flux	• Requires greater control of operating parameters • Temperature profile for reflow expected to play more important role in final results

Notes

cleaner) OTVC tank. The faster the work load is lowered into the tank, the greater the disturbance or turbulence created at the vapor-air interface and the greater are the air emissions as the interface tries to reestablish itself. When the workload is lowered manually into the tank it is difficult to achieve a slow, steady rate of entry. Installing an electric hoist above the OTVC allows greater control on the rate of entry or removal of the workload. Reducing the area of the horizontal face of the basket in proportion to the area of the OTVC tank opening is another way of reducing turbulence at the interface; this will however, adversely affect the production rate.

Facilitating parts drainage also is an important operating control. Parts that have recesses in which solvent condensate could accumulate must be placed in the basket in such a way that the condensate drains out of and not into the recesses. Thus, the amount of condensate dragged out as the basket is removed from the OTVC tank is limited, reducing subsequent air emissions. Another way of reducing dragout is to install electric-powered rotating baskets. The rotation allows condensate to drain out of the recesses in the parts.

Covers

A simple flat or rolling cover can be installed on the top of the OTVC tank to reduce air emissions. A cover reduces drafts in the freeboard that may cause disturbances. A cover also reduces diffusion losses during startup/shutdown, downtime, or idling. Covers should slide gently over the top of the opening to reduce disturbances. Automatic bi-parting covers that enclose the tank while the workload is in the process of being cleaned are also available. Covers can reduce working air emissions from an OTVC by as much as 35 to 50%. The variations in the percent reduction reflect different initial design and operating conditions of the OTVCs tested.

Increased Freeboard Height

Increasing the freeboard height from 0.75 to 1.0 or 1.25 can reduce air emissions significantly. Increasing the freeboard height that is, the height of the tank above the vapor-air interface reduces the susceptibility of the interface to room drafts and also increases the distance over which diffusion has to occur. Raising the freeboard on an existing OTVC may, however, reduce a worker's accessibility to the tank, but a raised platform next to the OTVC or an electric hoist can alleviate the problem. Raising the freeboard height from 0.75 to1.0 reduces working air emissions by up to 20% and under idling conditions by up to 40%. Increasing the freeboard height from 1.0 to 1.25 reduces emissions by another 5 to 10

Refrigerated Freeboard Coils

Air emissions can be reduced through diffusion by installing refrigerated coils on the freeboard above the primary condenser coils. The refrigerated coils may be designed to operate either above or below freezing temperatures. Although theoretically the below freezing coils should work best, in practice, the below- freezing coils have to be operated on a timed defrost cycle to prevent ice from building up on the coils. This periodic defrosting cycle reduces the efficiency of the coils to some extent. Working emissions are reduced by approximately 20 to 50% for above-freezing coils and by approximately 30 to 80% for below-freezing coils. Under idling conditions, emissions with below-freezing coils were reduced by approximately 10 to 60%. Some systems operate with the primary condenser coils refrigerated, instead of having separate refrigerated coils.

Reduced Room Draft/Lip Exhaust Velocities

Room drafts caused by plant ventilation can cause an increase in air emissions by sweeping away solvent vapors that diffuse into the freeboard region, leaving behind a turbulence that promotes greater emissions. Reducing room drafts can reduce these emissions. One interesting case is when lip exhausts themselves cause emissions. Lip exhausts are lateral exhausts installed on the perimeter of the OTVC opening to reduce solvent concentrations in the region where workers are exposed. However, this very feature increases diffusion and solvent diffusion losses from the OTVC sometimes are almost doubled. Although most of the diffusing solvent is captured by the lip exhaust and may be recovered later by carbon absorption, some vapor escapes to the ambient.

Notes

Benefits of Add-On Controls to Existing Vapor Degreasers

Additional controls can be incorporated into an existing OTVC to reduce these air emissions. These add-on controls are an important way of reducing solvent emissions without changing the cleaning operation dramatically. Add-on controls have the following benefits.

- They can be retrofitted onto existing vapor degreasers.
- Simple add-ons such as a cover can reduce air emissions significantly.
- Reduced air emissions mean reduced solvent consumption and hence reduced operating costs.
- Add-on controls are relatively inexpensive.
- They are easy to install and operate.
- Using add-on controls requires no additional labor or skills.

Limitations of Add-On Controls to Existing Vapor Degreasers

- The performance of any one add-on control is dependent on the design features already available on the OTVC. For example, the control efficiency of refrigerated coils varies depending on the temperature and efficiency of the existing primary condenser.
- Air emissions can be reduced considerably but not eliminated by suing multiple controls. For example, if adding a cover along reduces air emissions by 50% and adding refrigerated coils alone reduces air emissions by 50%, adding both the cover and the refrigerated coils will not give 100% reduction.
- Work load-related losses can be reduced but not eliminated.
- Dragout of solvent with the workload cannot be eliminated using add-on controls. Some residual solvent will escape from the parts to the ambient air.

Completely Enclosed Vapor Cleaner

In a completely enclosed vapor cleaner (CEVC), the workload is placed in an airtight chamber, into which solvent vapors are introduced. After cleaning is complete, the solvent vapors in the chamber are evacuated and captured by chilling and carbon absorption. Once the solvent in the chamber is evacuated, the door of the chamber is opened and the workload is withdrawn. The cleaned workload is also free from any residual solvent and there are no subsequent emissions.

The CEVC remains enclosed during the entire cleaning cycle. Approximately 1 hour before the shift starts, a timer on the CEVC unit switches on the heat to the sump. When the solvent in the sump reaches vapor temperature, the vapor is still confined to an enclosed jacket around the working chamber. The parts to be cleaned (work load) are placed in a galvanized basket and lowered by hoist form an opening in the top into the working chamber. The lid is shut, the unit is switched on, and compressed air (75 psi) from an external source hermetically seals the lid shut throughout the entire cleaning cycle.

Exhibit 5.3 shows the cleaning cycle stages. First, solvent vapors enter the enclosed cleaning chamber and condense on the parts. The condensate and the removed oil and grease are collected through an opening in the chamber floor. When the parts reach the temperature of the vapor, no more condensation is possible. At this point, fresh vapor entry is stopped and the air in the chamber is circulated over a cooling coil to condense out the solvent. Next, the carbon is heated up to a temperature where most of the solvent captured in the previous cleaning cycle can be desorbed. The desorbed solvent is condensed out with a chiller. The carbon absorbs the residual solvent vapors from the air in the cleaning chamber. The absorption stage continues until the concentration in the chamber is detected by a sensor that falls below a preset level (usually around 1 g/m^2). When the concentration goes below this level, the seal on the lid is released and the lid can be retracted to remove the workload. Upon retraction, a tiny amount of residual solvent vapor escapes to the atmosphere, the only emission in the entire cycle. Tests have shown that the CEVC reduces solvent emission by more than 99% compared with an OTVC.

Notes

Exhibit 5.3: CEVC Cleaning Cycle

Stage	Vendor Recommended Time Setting
Solvent Heat-up (once a day)	Variable to Raise Temperature to 70 °C
Solvent Spray (optional)	10 – 180 sec.
Vapor Fill	8 – 40min. (Varies according to mass of work load and type of metal.)
Degreasing	20 – 180 sec.
Condensation	120 sec.
Air Recirculation	120 sec.
Carbon Heat-up	Variable
Desorption	60 sec.
Adsorption	60 – 240 sec.

Unlike a conventional degreaser, there are no significant idling losses between loads, downtime, or during shutdown. The CEVC can be operated as a distillation unit to clean the liquid solvent in the sump. To distill, the unit is switched on without any workload in the chamber. After most of the solvent is converted to vapor, the residue in the sump is drained out and the vapors in the chamber are condensed in the chiller to recover the solvent. CEVC thus provides a good alternative for meeting pollution prevention objectives.

Energy requirements of the CEVC are higher compared with a conventional degreaser. The CEVC operates on a 480-V AC electric supply and consumes approximately 22 kW of power. The higher energy is required to generate, condense, and move the vapor during each load.

One significant difference between a conventional degreaser and the CEVC is that, in the conventional degreaser, there is always a solvent vapor layer present in the degreasing tank. This layer is continuously replenished with solvent vaporizing from the sump. The workload therefore reaches vapor temperature very soon and the cleaning is completed. The CEVC, on the other hand, goes through several stages to evacuate and introduce vapors. Although most of the stages have a relatively fixed time requirement, the vapor-fill stage time varies. The vapor is introduced near the bottom of the working chamber with each workload. The vapor slowly works itself up through the workload bringing each successive layer of parts in the basket to vapor temperature. The time taken for the entire load to reach vapor temperature varies from 8 to 40 minutes. This vapor-fill time, however, is highly dependent of the total mass and type of metal in the workload. The factor that governs the variation based on type of metal is the thermal diffusivity of each metal. The thermal diffusivity itself is a function of the thermal conductivity, specific heat, and density of the metal.

For a CEVC unit, as the mass of the workload increases, the total cycle time increases (mainly due to an increase in the vapor-fill stage time). Parts made out of copper or aluminum require a lower cycle time compared to steel. Aluminum, though, has a much lower density, and there is a limit as to the mass (or weight) of parts that can fit into the basket for one cycle. Additional parts have to be run through the next batch or cleaning cycle.

Benefits of Completely Enclosed Vapor Cleaning

- Reduces solvent emissions by over 99% compared to a conventional OTVC.
- Users who do not want to switch to aqueous cleaning can still achieve significant pollution prevention by using the CEVC.
- Labor and skill level requirements are similar to those for a conventional OTVC.
- The CEVC lowers operating costs by reducing solvent losses.

Notes

- No additional facility modifications are needed to meet OSHA requirements for plant ambient solvent levels.
- The CEVC has fully automated cycles and runs unattended except for loading and unloading. The unit adjusts automatically to any type of workload and unseals the working chamber when the cycle is complete.

Limitations of Completely Enclosed Vapor Cleaning

- The CEVC has relatively high capital cost compared to a conventional OTVC.
- The CEVC has longer cleaning cycles for the same capacity.
- It has a relatively higher energy requirement because of the alternating heating and cooling stages.

Automated Aqueous Cleaning

Small machine parts are often cleaned in batches of thousands by immersion into a solvent solution or a solvent vapor. An alternative to this process is the automated aqueous parts washer. Instead of immersion, the automated aqueous washer sprays an aqueous solution across the parts to remove oil and debris. Parts travel through a series of chambers, each with different concentrations of cleaning and rinsing solutions. Excessively sprayed solution is recovered and reused. Similar automated cleaners are also available for semi-aqueous cleaning solutions.

The configuration of the system promotes good contact between cleaning solutions and the parts. One example of an automated aqueous cleaner consists of a series of five compartments though which the soiled metal parts are transported. The parts are transported form one compartment to the next by a helical screw conveyor. The parts are sprayed successively with solutions from five holding tanks (one for each compartment). The first compartment sprays hot water on the parts. The second and third compartments spray detergent solutions at two different concentrations on the parts. The fourth compartment is for a clean water rinse. The fifth and final compartment sprays a rust inhibitor solution, if required. The fifth compartment is followed by a dryer that vaporizes any water droplets remaining on the parts. The cleaned parts drop out of the dryer onto a vibrating conveyor from which they are collected.

The automated aqueous washer also makes use of a "closed loop" system, whereby the used solutions are not disposed of daily but can be recirculated for a relatively continuous operation. The cleaning solutions are recaptured after use and sent to a separator tank. One separator tank is provided for each compartment. In these tanks, the oil floats to the surface and is skimmed off by a pump. Dirt and suspended particles settle down at the bottom of the tank. The bulk of the solution is recirculated back to the holding tanks for reuse. Some makeup solution is needed periodically to replace losses from evaporation and dragout. Detergent chemicals are also replenished periodically.

Because the closed-loop system eliminates daily disposal of spent solutions, the same cleaning solution can be recirculated and used for several days without changing. At the end of the week (or whenever the contaminants reach a certain level), the holding tanks are emptied and fresh solutions are made up. Because recovery and reuse of the cleaning solution is automatic, the unit requires very little operator attention. In contrast to vapor degreasing or traditional batch aqueous cleaning processes, the continuous operation of this conveyorized unit enables production efficiency. The only operator involvement is for unloading a barrel of soiled parts into the hopper that feeds the parts to the compartments.

Several variations of the automated aqueous cleaners are available. Different types of filters, oil-water separators, and sludge thickeners are some of the features offered. Some new units claim zero wastewater discharge, with fresh water added only to make up for evaporation in the drier.

Benefits of Automated Aqueous Cleaning

Automated aqueous cleaners use aqueous cleaning solution instead of solvents to achieve high-quality cleaning. This available technology replaces the hazardous solvent waste stream with a much less hazardous wastewater stream. These automated machines also have features to significantly reduce the amount of wastewater generated. These machines remove some of the contamination from the parts being

Notes

cleaned into the cleaning solution. The cleaning solution can then be recirculated for use several times. The automated washer described above has the following benefits.

- Improved contact between cleaning solution and parts being cleaned enables most types of parts to be aqueous cleaned instead of solvent cleaned.
- Solvent usage at a metal finishing plant can be drastically reduced or eliminated.
- Cleaning effectiveness is comparable to vapor degreasing or conventional aqueous cleaning processes (alkaline tumbling or hand-aqueous washing).
- The amount of wastewater generated is very low compared to the amount generated by traditional aqueous processes. In some types of units, the manufacturer claims that wastewater is completely eliminated with fresh water added only to make up for evaporation.
- The automated aqueous washer is easy to install and operate. The labor and skill requirements are low.
- This technology has lower cleaning chemicals consumption compared to traditional aqueous processes.
- Continuous operation of the automated aqueous washer enhances plant efficiency.
- The technology realizes operating cost savings compared to traditional aqueous processes.

Limitations of Automated Aqueous Cleaning

- Wastewater generated must be treated and discharged.
- Some types of parts cannot be cleaned as effectively in the automated aqueous washer as in a vapor degreaser or with a conventional aqueous process.
- The technology has a high energy requirement compared to vapor degreasing, mainly due to drying requirements.
- The automated aqueous washer technology has a relatively high initial capital requirement.
- Drying can leave spots on aqueous-cleaned parts if rinsing is inadequate.

Aqueous Power Washing

Unlike the automated washer that has a continuous operation, most power washers are batch units. Some continuous (conveyorized) units are also available. Whereas the automated washer is more suitable for smaller parts, the power washer is suitable for larger parts. The aqueous power washer is useful for parts that normally run through a vapor degreaser, alkaline tumbler, or hand-aqueous processes. Power washing, with the correct selection of detergents, is safe for metals, plastics, varnish coatings, and etc. A power washer can also be used for deburring and chip removal of metal parts.

Parts to be cleaned are placed inside the power washer unit on a turntable. As the turntable rotates, the parts are blasted from all angles with water at high pressure (180 psi) and elevated temperature (140 °F to 240 °F). The force of the spray jets, the heat, and the detergent, combine to strip oil, grease, carbon, and etc. The cycle time varies from 1 to 30 minutes depending on the type of part.

Power or jet washers are available from a variety of vendors with varying options and in various sizes. One available option is a closed-loop system. The water is collected and sent through a filtration or sedimentation unit or another method of contaminant removal and then sent back to the unit for reuse. This can reduce wastewater treatment and disposal requirements as well as water consumption. While most systems are simple single-compartment batch units, they are available also as multiple-stage cleaning units or as conveyorized automated systems.

Most units run on 220 V electrical power. Aqueous power washers are stand-alone units and are available in a range of sizes to fit even in crowded plants. An aqueous cleaner can be selected for use in a power washer depending on the type of parts to be washed.

Notes

Benefits of Aqueous Power Washing

The aqueous power washer is similar to the automated aqueous washer in that it combines innovative process technology with the use of an aqueous (or semi-aqueous) cleaning solution. Both technologies eliminate the use of solvents for cleaning. When combined with a "closed-loop" technology, in which the cleaning solution is recirculated, aqueous power washing also reduces water and cleaning solution disposal requirements. The benefits of the aqueous power washer are the following.

- Aqueous cleaners can be used in applications where solvent cleaning was used previously.
- Aqueous cleaners provide more efficient cleaning compared to manual aqueous tank cleaning.
- Cleaning times are reduced.
- The most common unit is a compact machine with one chamber as opposed to several tanks or compartments.
- The small units are also available as portable units.

Limitations of Aqueous Power Washing

- Wastewater generated has to be treated and discharged.
- Some parts, such as electronic sensors or diaphragms, may not be able to withstand the high pressure or temperature of the sprays.
- It is also possible that jet washers will not be able to remove baked-on dirt that cannot be removed by scrubbing.
- Drying can leave spots on aqueous-cleaned parts if rinsing is inadequate or if the rinsewater contains a high level of dissolved solids.

Ultrasonic Cleaning

In ultrasonic cleaning, high frequency sound waves are applied to the liquid cleaning solution. These sound waves generate zones of high and low pressures throughout the liquid. In the zones of negative pressure, the boiling point decreases and microscopic vacuum bubbles are formed. As the sound waves move, this same zone becomes one of positive pressure, thereby causing the bubbles to implode. This is called cavitation and is the basis for ultrasonic cleaning.

Cavitation exerts enormous pressures (on the order of 10,000 pounds per square inch) and temperatures (approximately 20,000°F on a microscopic scale). These pressures and temperatures loosen contaminants and perform the actual scrubbing action of the ultrasonic cleaning process.

Ultrasonic energy usually is applied to a solution by means of a transducer, which converts electrical energy into mechanical energy. The positioning of the transducers in the cleaning tank is a critical variable. The transducers can be bonded to the tank or mounted in stainless steel housings for immersion in the tank. The number and position of immersable transducers are determined by the size and configuration of the parts, the size of the batch, and the size of the tank. It is preferable to locate the transducers so that the radiating face is parallel to the plane of the rack and the ultrasonic energy is directed at the work pieces.

The part being cleaned must be immersible in a liquid solution. For best cleaning results, testing must be done with each set of parts to obtain the optimum combination of solution concentration and cavitation levels. Temperature is the operating feature that has the most effect on the cleaning process. Increased temperature results in higher cavitation intensity and better cleaning. This is true provided that the boiling point of the chemical is not too closely approached. Near the boiling point, the liquid will boil in the positive pressure areas of the sound waves, resulting in no effective cavitations.

How parts are loaded into an ultrasonic cleaner also is an important consideration. For instance, a part with a blind hole or crevice can be cleaned effectively if it is placed so that liquid fills this hole and is therefore subjected to cavitation action. If the hole is inverted into a liquid with the opening of the hole facing downward, it will not fill with liquid and will not be cleaned. Overloading baskets with small parts

Notes

can sometimes result in ultrasonic energy being adsorbed by the first several layers of parts. Large volumes of small parts can be more effectively cleaned a few at a time with relatively short cycles.

The actual basket design is another important consideration. It should ensure that transmission of ultrasonic energy would be attenuated as little as possible. An open racking method is best whenever possible.

There are three basic stages in ultrasonic cleaning. The first is the presoak stage, which is vital to the efficiency of the system. In this stage, parts are placed in a heated cleaning solution that removes all chemically soluble soil and contaminants. The second stage is the primary stage of ultrasonic cleaning, in which scrubbing and cleaning are performed through cavitation in the solution. The third stage is rinsing of the cleaned part. Ultrasonics also can be applied in the third stage for increased efficiency.

The primary ultrasonic cleaning system has three components: a liquid solution tank; an ultrasonic generator, which is the power source of electrical energy; and a transducer that converts electrical energy to mechanical energy. Most generators accept standard AC input at 60 Hz and then convert it to DC. Sizes range from 200-W tabletop units to large 1000-W units. The optimum transducer frequency for most applications has been found to be approximately 20 kHz.

The use of ultrasonic equipment does not require any special knowledge. The equipment can be selected with the aid of the manufacturer and is simple to operate. There are two basic types of ultrasonic equipment available. Electrostrictive ultrasonics employ a ceramic crystal to produce sound vibrations, while magnetostrictive ultrasonics use metallic elements.

Ultrasonic cleaning can be applied to almost any part. Materials such as ceramic, aluminum, plastic and glass, as well as electronic parts, wire, cables, and rods and detailed items that may be difficult to clean by other processes, are ideal candidates for ultrasonic cleaning.

Printed circuit boards and other electronic components can also be cleaned using ultrasonics. While there have been complaints that the 20 kHz equipment can damage fragile products such as electronic equipment, there are 40 kHz equipment which is more applicable to the electronics industry and also reduces the noise level associated with ultrasonic cleaning.

Although most available ultrasonic cleaning equipment is designed for batch tanks, equipment does exist in cylindrical form. A horizontal cylindrical tube or pipe is fitted with peripheral transducers. The transducers focus energy along the in-line centerline to allow non-contact cleaning except for the cleaning solution. It has a concentrated high power which results in reduced cleaning times. It generally is used for cleaning wire, strip, tube, cable, and rod configurations. The cylindrical form allows items to feed through without bending and is easily adaptable to varying customer line speeds.

Because of the simplicity of the equipment and the decreased cleaning time, there is a saving in labor costs when using ultrasonics. This savings, along with that from decreased solvent purchase and disposal costs, offsets the capital cost of the equipment in a short time.

Benefits of Ultrasonic Cleaning

Ultrasonic cleaning makes use of cavitation in an aqueous solution for greater cleaning effectiveness. The efficiency of the technology greatly reduces or eliminates the need for strong solvents. Although solvents can be used with ultrasonic technology, and aqueous or semi-aqueous solution can be substituted for solvents, thereby eliminating solvents from the waste stream. The wastewater generated can then be treated on-site and discharged. Ultrasonic technology offers the following basic advantages.

- Ultrasonic cleaning can reach into crevices and small holes where conventional methods may not reach.
- Ultrasonic cleaning removes inorganic particles as well as oils.
- Processing speed can be increased.
- Health hazards are greatly reduced.

Notes

- A lower concentration of cleaning solution can be used and possible lower toxic agents such as neutral or biodegradable detergents can be employed.
- Although capital costs may be higher with ultrasonic cleaning, reduced solvent expense can often pay for a system in a short period of time.

Limitations of Ultrasonic Cleaning

- Wastewater generated has to be treated and discharged.
- Ultrasonic cleaning requires that the part can be immersed in the cleaning solution.
- Dryers may need to be employed to obtain a dry part.
- Testing must be performed to obtain the optimum combination of cleaning solution concentration and cavitation level.
- The electric power required for large tanks generally limits part sizes that can be cleaned economically.
- The tendency for thick oils and greases to absorb ultrasonic energy may limit their removal.
- Operating parameters have to be more closely monitored.

5.5.3.2 Recycling

The goal of recycling is to recover the cleaning medium in a form suitable for reuse. Technology is available to recycle halogenated solvents, nonhalogenated solvents, and aqueous cleaners. This may involve filtration, decantation, distillation, concentration, or a combination of methods. For many applications, continuous recycling can be used to maintain an acceptable level of contamination in the cleaner. The level of cleanliness required and obtained can range from low or zero in the case of maintaining a near-virgin grade of solvent to just maintaining an acceptable level so that parts are not over or under cleaned.

The recovery of spent solvents may be performed either on- or off-site. The recovery of emulsion cleaners (i.e., semi-aqueous or water-soluble solvents) and aqueous cleaners is exclusively performed on-site. The decision to recycle on- or off-site generally depends on the volume of waste to be processed, the capital and operating costs of the system, as well as the availability of in-house expertise. If the volume of waste to be recycled is small or if the level of in-house expertise is low, off-site recycling may be a more attractive option. A third option is to list the spent cleaning solution on a waste exchange service which acts as a broker to sell the spent solution to company that could use it as a raw material.

The following sections further describe the three recycling options;

- On-site recycling,
- Off-site recycling, and
- Waste exchange services;

as well as provide an overview of the basic recycling technologies available.

On-Site Recycling

On-site recycling is defined as the process of reclaiming a spent cleaning solution in or near the original process line for reuse. The decision to recycle wastes on-site is typically based on the economics of cleaner reuse and quality control.

Design of an on-site recycling system must be address a number of crucial elements including chemical volatility, solubility, thermal stability, potential corrosion or reaction with materials of construction, purity requirements for the recovered cleaner, system capacity, steam and cooling water availability, worker exposure, regulatory permitting, and overall economics. The above factors will guide the selection process for purchasing a specific type of recycling equipment and potentially the type of cleaner employed based on its recyclability. Three common types of recycling technologies; gravity separation, filtration, and

Notes

distillation; are available in a wide range of sizes, material construction, and performance requirements. The following further describes each basic type of recycling technology.

Gravity Separation

Gravity separation involves the removal of particles suspended in a liquid and is often referred to as sedimentation. The contaminated liquid is introduced into a settling tank, and after a sufficient settling time, the clarified liquid is drawn off from the solids resting of the bottom of the vessel. The solids are removed and disposed. This process is widely employed as a preliminary purification or prefiltration step. Capital, operating, and maintenance costs for a sedimentation system are low. Disadvantages of the method include poor removal of fine colloidal particles and potential for excessive air emissions if conducted in a large open holding tank or basin. Sedimentation is typically employed in the recycling of dirty cleanup solvents and thinners from painting operations.

Decantation is a gravity separation technique used to separate immiscible liquids of different densities. The mixture is slowly introduced into a decant tank where continuous-phase separation occurs. Dust and dirt particles can interfere with the separation so they are often removed by filtration beforehand. Decantation is often used to remove insoluble oils from spent solvents in the dry cleaning industry and to recover semi-aqueous solvents that enter the emulsion rinse stage. The main factors in designing a decant tank are the droplet size of the discontinuous phase and its volume fraction.

To achieve a greater degree of solid or immiscible liquid separation, the acting forces may be increased by pumping the contaminated liquid through a hydrocyclone or centrifuge. These devices spin the liquid and create a very large centrifugal force that acts on the suspended matter in a way similar to gravity, except much greater. Solids are removed in the under flow of the device while clean liquid is discharged in the overflow. As expected, capital and operating costs for these devices are greater, but so is the effectiveness of separation. Use of a hydrocyclone to remove suspended dirt and oil from an aqueous cleaning bath can sometime double solution life. Centrifuges are sometimes used to remove water from oils, but they are not commonly encountered in parts cleaning operations.

Filtration

The process of filtration removes insoluble particulate matter from a fluid be means of entrapment in a porous medium. It is often used to extend the life of a cold-cleaning bath or to continuously remove metal fines and sludge from a vapor degreaser sump. Some of the process related factors important in the selection of a filter system include particle size distributions, solution viscosity, production throughput, process conditions, performance requirements, and permissible materials of construction. Common styles include bag and disposable cartridge, although a wide array of equipment is available.

While standard filtration does not remove soluble contaminants such as dissolved oils from a solvent, it can be used to remove solid dirt and grease particles. Passing the dirty solvent through a fine metal screen may remove these contaminants before they have a chance to dissolve and load the solvent bath. Routing, screening and removal of undissolved contaminants can be an effective way to extend the life of a cold-cleaning bath.

Microfiltration systems are filtration technologies that can remove soils to a much finer degree than standard filtration. In the field of precision cleaning, their use is essential. Typically, vapor degreasers are equipped with a 5 or 10-µm filter for removal of particulates. The smaller particles that are not removed accumulate in the sump and eventually contaminate the solvent vapor and hence the assemblies being cleaned. The use of a microfiltration system can remove particulates down to less than 0.1 µm in size. This minimizes the potential for particulate contamination of the solvent vapor. Because of the fine filtration capability of the filter, removal of water, organic acids, and other soils from the solvent is feasible.

Moving beyond microfiltration, membrane filtration (which includes ultrafiltration) is capable of removing emulsified oil and grease from aqueous cleaning solutions. Membrane filtration is sometimes so effective that it will also remove surfactants and other special additives from the cleaner. Particles as fine as 0.01 to 0.003 µm and organic molecules with molecular weights exceeding 500 can be removed by ultrafiltration. Therefore, selection of a suitable aqueous cleaner and the ability to recycle that cleaner often involves optimizing ingredients used in the formulation to removal efficiency of the system.

Notes

Distillation

Distillation is the process of separating two miscible liquids based on the difference in their vapor pressures. The process of distillation is commonly used to recover a clean volatile solvent (halogenated) from a less volatile contaminant. Operation may be conducted in batch or continuous modes.

Distillation for halogenated solvents falls into one of three categories; process stills, batch stills, and semi-portable mini-stills. Process stills are used in conjunction with vapor degreasers to provide continuous cleaning of the solvent. Dirty solvent from the sump of the degreaser is pumped to the still for processing and then returned to the degreaser's clean solvent storage tank. Solvent recovery with a process still typically ranges from 60 to 80 percent. An advantage to process stills over batch stills is that the degreaser does not have to be shut down while the solvent is being processed. Another advantage is that the level of contamination in the degreaser stays at a steady low level. Process stills may also be used for recycling solvent from cold-cleaning operations.

Batch distillation is performed whenever the degreaser requires cleaning; anywhere from once per week to once per month or longer. Batch distillation is also commonly used to recycle solvent from cold-cleaning operations. To be recycled, dirty solvent is pumped into the still, heated and condensed, and then put back into drums or storage tanks for return to its point of use. Batch stills are typically capable of much higher solvent recovery rates than are process stills, usually around 70 to 95 percent. The reason for this is that waste from a process still must often be pumped out into drums while batch stills are often equipped with lining bags that are then used to lift the waste out of the unit. Since the waste does not have to be pumped out, the viscosity of the waste is less of an issue and higher solvent recovery can be practiced. The uses of batch mini-stills is not common with vapor degreasing, but are widely used in maintenance parts cleaning.

If the boiling point of the solvent is high (greater than 200 °F as with perchloroethylene), distillation can be performed under vacuum to minimize thermal decomposition of the solvent or impurities. Vacuum distillation can also be used to recover d-limonene at low temperatures so as to avoid auto-oxidation and polymerization. Another technique is to inject live steam into the solvent, which allows the solvent to boil at a lower temperature. The condensate of water and solvent is then phase-separated by gravity in a decanter. Steam injection should not be used when the solvent contains water-soluble inhibitors. The use of steam sparging can also result in increased air emissions if the sparging and condensing equipment are not designed and operated properly.

Benefits of On-Site Recycling

- Less waste leaves the facility.
- Tighter control of recovered cleaner purity.
- Reduced cost of liability associated with waste transport.

Limitations of On-Site Recycling

- Capital expenditure required for purchasing and installing recycling equipment.
- Additional operating costs for periodic maintenance, operation, and worker training.
- Increased liability associated with worker health, fires, leaks, and spills.

Off-Site Recycling

The second option off-site recycling of the spent cleaning solution through an outside vendor or contractor. Most commercial recyclers readily accept halogenated or nonhalogenated solvents and recycle them be means of distillation. The off-site recycler, under a contractual agreement, picks up the generator's contaminated solvent, recycles it, and delivers the purified solvent back to the generator. If the generator does not want the recycled solvent back, then he receives a lesser credit for the solvent and the recycler sells the solvent to another user. The sludges that result from the off-site reclamation operation contain halogentated solvent and are usually blended with nonhalogenated solvent waste and sent as fuel supplement to cement kilns. The production of cement requires a source of chlorine, and the use of halogentated solvent suits this need well.

Notes

Generators should be careful to maintain spent solvents in as pure a form as possible (i.e., keep all solvents segregated) so as to maximize their recyclability. Failure to keep solvents segregated may lead to rejection of the solvent by the recycler. Depending on the waste volumes handled, off-site recycling may be economically favorable over on-site recycling. Off-site commercial recycling services are well suited to small-quantity generators. The recycler may charge the generator by volume of waste accepted and later credit the generator for the value of recoverable solvent received. Other recyclers charge a straight fee or accept waste at no charge depending on its market value.

In selecting an off-site recycler, one should remember that the waste generator can be held liable for the mishandling of waste by the hauler or recycler. In choosing a commercial recycling service, one should investigate and verify the following:

- Types of wastes typically managed;
- Permits held by the facility;
- State compliance records and site inspection reports;
- Type and extent of insurance held;
- Type of record keeping and reporting practices followed:
- Availability of registered trucks and licensed haulers to transport the waste solvents;
- Distance to the recycling facility and associated transportation costs;
- Expertise of in-plant waste management personnel and process controls;
- Disposal procedures for still bottoms and solvents that cannot be recycled;
- Laboratory facilities and analytical procedures employed to ensure solvent purity;
- Availability of custom recycling services (e.g., vendor-owned recycling units that are operated at the generators property); and
- Customer comments.

Benefits of Off-Site Recycling

- No capital cost for equipment.
- Potential for increased profit from the cost of off-site recycling in comparison to purchasing virgin cleaning solvent.
- Reduction in raw material purchases.

Limitations of Off-Site Recycling

- Off-site recycling is not considered pollution prevention.
- Increased liability associated with off-site transfer of waste.
- Commercial recyclers generally except only petroleum based products.

Exchange Services

A third recycling option is to list the spent cleaning solution either on an information exchange or material exchange. An information exchange acts as a clearinghouse for information on waste availability and demand. The following information is required to list a spent cleaning solution with an exchange service: type of waste, composition, quantity, method of delivery (i.e., drums or bulk), frequency of generation (i.e., one time or continuous), and regional location. Once this information is listed, the clearing-house will provide a list of facility names that inquire about the generator's waste. All arrangements for transferring and delivering the waste are between the generator and purchaser.

A material exchange differs from an information exchange in that it takes temporary physical possession of the waste and may initiate or actively participate in the transfer of the waste to the user.

Notes

Advantages of this arrangement include less involvement of the generator and receiving facility in deciding on equitable terms and conditions (these may already be dictated by the material exchange) and the ability to participate in an exchange without the facilities having to identify themselves with one another. A disadvantage of a material exchange is that the generator will pay more for this service; many information exchanges are free. Information regarding available exchanges can be obtained from state and local regulatory agencies involved in pollution prevention or recycling activities.

Benefits of Exchange Services

- No capital cost for equipment.
- Potential for increased profit from the sale of spent cleaning solutions.
- Reduces facility hazardous waste generation (assuming the spent solution is used by the purchaser as a raw material).

Limitations of Exchange Services

- Increased liability associated with off-site transfer of waste.
- Market demand fluctuates based on supply and demand.
- Sale price may fluctuate greatly over time.

5.6 Chemical Etching

The following section provides a process description, waste description and a broad range of pollution prevention opportunities that can be implemented to improve chemical etching operations.

5.6.1 Process Description

Chemical etching is the process of depositing a conversion coat onto a metal substrate to enhance the corrosion and adhesion properties of the metal prior to applying a paint coating. The two most common types of chemical etching are Phosphating on steel or zinc, and Chromate Conversion Coating (CCC) on aluminum.

5.6.1.1 Phosphating

Phosphating (i.e., iron and zinc phosphating) is the process of depositing a conversion coating onto steel or galvanized steel to enhance the paint coating's adhesion to the metal surface. This strengthened bond enhances the coatings' ability to resist corrosion. Typically, iron phosphating is conducted using a three-step process that includes two rinse steps. To achieve a primer - topcoat system with enhanced corrosion resistance, a five-step process that comprises three rinse steps is used. (See Exhibit 5.4.) Depending on their size and the volume throughput requirements, workpieces undergo phosphating either in batches by immersion or as individual pieces that are sprayed as they are moved through the process by conveyor. For most pretreatment processes, the phosphating stage is followed immediately by a dry-off oven, at a temperature that will evaporate water as quickly as possible to prevent flash rusting. For ovens used to dry particularly bulky pieces, the temperature may be as high as 400 °F.

Exhibit 5.4: Five-stage Iron or Zinc Phosphating Process

5.6.1.2 Chromate Conversion Coating

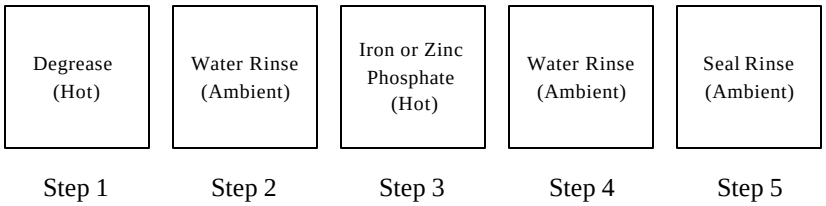

Chromate Conversion Coating, a chromate oxide formulation, is the process of depositing a conversion coating onto aluminum. For low-value end products, aluminum work pieces are often pretreated using an aqueous (i.e., nonchromate) formulation. Common trade names for chromate conversion coating solutions

Notes

include Alodine® 1200 and Accelagold®. The active ingredient in these solutions is hexavalent chromium in chromate (CrO_4^{-2}) and dichromate ($Cr_2O_7^{-2}$) chemical forms.

Conversion coatings are widely used in the manufacture and maintenance of aluminum prior to painting or as a final finish. In most cases, the conversion coating imparts corrosion protection and provides an excellent base for paint adhesion. In a smaller number of cases the conductive properties of the coating allow it to be used for electrical bonding applications. Recent developments in conversion coating formulations have lead to the development of nonchromate conversion coatings for limited applications.

A typical process for applying a conversion coating to aluminum with either a chromate or nonchromate formulation, consists of a seven-step process that includes two rinse steps. (See Exhibit 5.5.)

Exhibit 5.5: Typical Conversion Coating Process for Aluminum

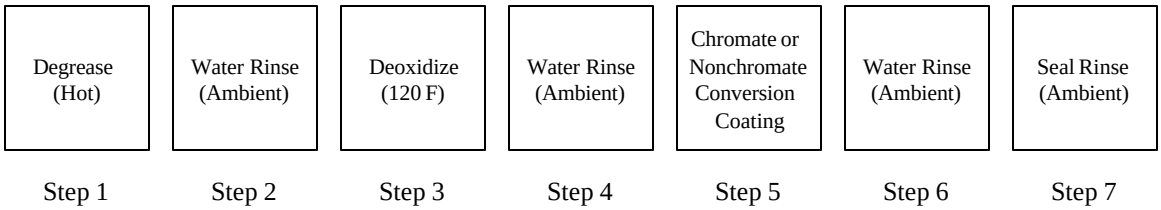

5.6.2 Waste Description

Chemical etching, either phosphating or chromate conversion coating regardless of complexity requires four basic steps; Degrease, Pre- Rinse, Chemical Etch, and Post- Rinse. Each phase of the chemical etching process generates air emissions and solid waste. This section of the document deals with the waste streams generated from the pre-rinse, chemical etching, and post-rinse process steps. Detailed information on Degreasing is contained in Section 5.5, Cleaning & Degreasing.

Pre-rinsing, after degreasing and before chemical etching, is essential to prevent contamination and to maintain the pH of the phosphate bath, but rinsing can generate high volumes of wastewater. A more efficient process, cost savings and wastewater minimization can be attained through process modifications.

Exhibit 5.6 describes the basic waste streams generated from a typical chemical etching operation.

Exhibit 5.6: Simplified Material Balance of a Chemical Etching Process Step

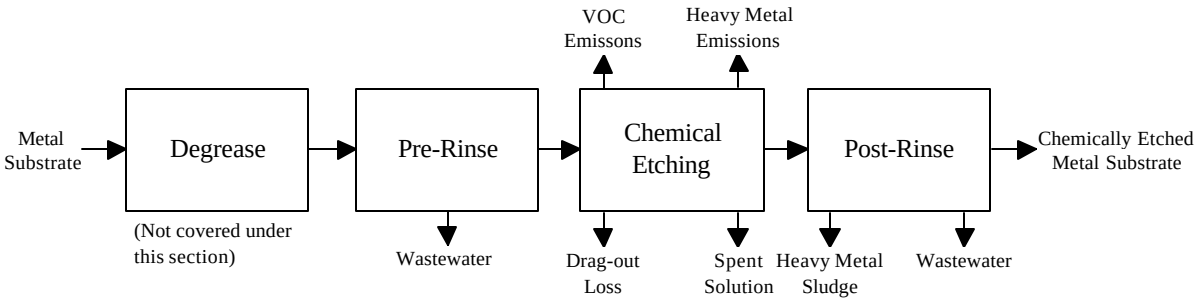

For certain types of operations, a post-rinse stage is included to remove drag-out of unreacted acids, sludge deposits, corrosive salts, and other contaminants that remain on the work piece following chemical etching. Because more rinse cycles are required with post-rinsing than pre-rinsing, the post-rinse can also generate high volumes of wastewater. However, efficient process modifications can reduce overall costs and wastewater.

5.6.3 Pollution Prevention Opportunities

Pollution prevention opportunities for the chemical etching industry exist in both the source reduction and recycling categories. These opportunities are discussed in further detail below.

Notes

5.6.3.1 Source Reduction

The chemical etching industry has many opportunities for pollution prevention through source reduction. The source reduction possibilities are typically separated into (1) process efficiency and (2) alternative sealing processes.

Process Efficiency

A key method to waste minimization in the chemical etching stage of metal finishing is source reduction via process efficiency. Applying conversion coatings to work pieces with chemicals that are appropriate for the particular metal substrate can minimize the generation of heavy metal sludge in immersion baths or from conversion coating spray operations. If the color of a deposited coating varies from the coloration associated with the particular formulations, the process operator should check for problems such as exhaustion of the solution. Both the monitoring of operations and the replenishing of chemicals can be automated to ensure maximum process efficiency.

In general, some amount of heavy metal sludge is generated in all chemical-etching processes. In the worst case, the use of chemicals that are not well suited to a work piece's metal substrate will fail to deposit a coating and will generate an excess of heavy metal sludge. For example, iron phosphate cannot be used to apply a conversion coating to galvanized steel because the acid will react with the zinc in the substrate but not the iron, resulting in an excess of zinc sludge. Instead, a zinc phosphate formulation should be used to apply a conversion coating on galvanized steel. Similarly, an aluminum substrate will not receive a conversion coating from iron phosphate and will generate an excess of aluminum sludge. Aluminum phosphate should be used to apply conversion coatings to aluminum work pieces.

Degreasing Before Chemical Etching

The removal of grease is an important step before chemical etching. Detailed information on the degreasing process is contained in Section 5.5, Cleaning & Degreasing.

If the degreasing formulation is properly selected for an immersion process, contaminants from work pieces will either sink to the bottom of the tank or float to the top (i.e., the oils will float rather than emulsify). The line operator can then easily filter out the insoluble sludges or separate off the oils. Sludge material can be dried and then disposed of as hazardous waste, whereas the oils can be sent off site for fuels blending.

Benefits of Degreasing before Chemical Etching

- Remove trace contaminants from the work piece.
- Minimize the likelihood of alkaline salts and grime contaminating the phosphate bath.
- Prevent the alkaline salts from raising the pH of the phosphate bath
- Increase bath life.

Limitations of Degreasing before Chemical Etching

- Degreasing operation may generate a hazardous waste stream or require the use of toxic chemicals to remove the trace contaminants.

Rinsing after Degreasing

Before chemical etching, a metal work piece should be thoroughly rinsed to remove any surface residue. While the surfactants in degreasing formulations are essential for removing contaminants from a work piece, their typically low surface tension makes them extremely difficult to remove without a thorough rinse. Surfactants and other contaminants that remain on the surface of the work piece following degreasing can undermine the integrity of the metal deposition and ultimately the quality of the finished piece. An additional reason for including a rinsing step at this point of the processes is to minimize the amount of drag-in from high alkaline degreasing baths to the near-neutral chemical etching bath. Drag-in from a degreasing bath or from an exhausted post-degreasing rinse will gradually neutralize the chemical etching bath until little or no metal will deposit on the work piece. Thus, eliminating this rinsing step can dramatically shorten the useful life of the chemical etchant bath, which in turn creates higher raw chemical costs and increased waste stream volumes. The following describes three rinsing systems that can be effectively used in chemical

Notes

etching operations to extend bath life and improve finished product quality; rinsing by immersion, spray rinse system, and counter-flow rinsing.

Rinsing by immersion is ideal for situations in which the production flow through the process is relatively slow (i.e., less than 2 ft/min on a continuous basis) and production is intermittent. A facility operator considering the installation of an immersion system should consult with a specialized contractor about design and layout.

Exhibit 5.7 illustrates two typical immersion system layouts. Exhibit 5.7(a) shows the more common layout for a typical batch operation; Exhibit 5.7(b) shows a less-common layout that would rely on a conveyor to carry work pieces in and out of the tanks in a continuous process.

A spray rinse system is often recommended for a paint and coatings operation that has a conveyor line with a speed greater than 2 ft/min. Facility operators considering the installation of a spray washer line would be well advised to consult with a specialized contracting company. In general, when planning for a spray washer, the facility operator needs to consider how the layout will affect process flow. The spray washer system must be designed so that work pieces easily pass through the pretreatment process, allowing adequate time for the solutions to drain between each tank.

A spray washer system cannot be properly designed unless the conveyor line speed and the part sizes are known. The dimensions of the spray tunnel must be based on the silhouette of the maximum part size. The spray nozzles inside the tunnel must be located on risers so that they are only a few inches away from the largest part.

Exhibit 5.7: Immersion Rinse System Schematic

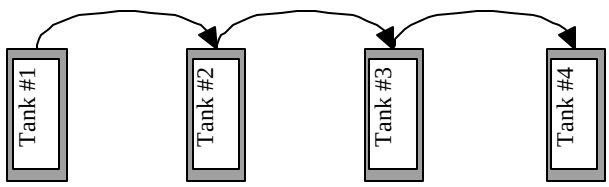

(a) Immersion tanks laid out for batch operation

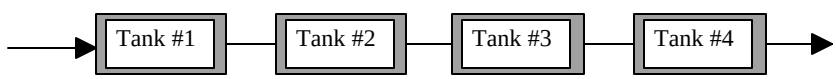

(b) Immersion tanks laid out for continuous conveyorized operation

When possible, a system should be designed so that spray rinses precede every process tank. Although the rinses are at low pressures, they enhance pretreatment by preventing the contamination of tanks with chemicals from a preceding tank. Operation of such spray washers is relatively inexpensive because low volumes of water are used.

Given the vast number of work pieces and parts of varying size that can pass through a spray system each day for certain operations, nozzles can often be misdirected. Thus, a maintenance engineer should routinely check to see that spray nozzles are pointing in the correct direction.

A design feature often overlooked regards conveyors that pass work pieces through the tunnel, dry-off oven, and spray booths, as shown in Exhibit 5.8. The advantage of such design is that line workers are only needed for hanging and offloading work pieces.

Notes

Exhibit 5.8: Schematic of a Conveyorized Paints and Coatings Operation

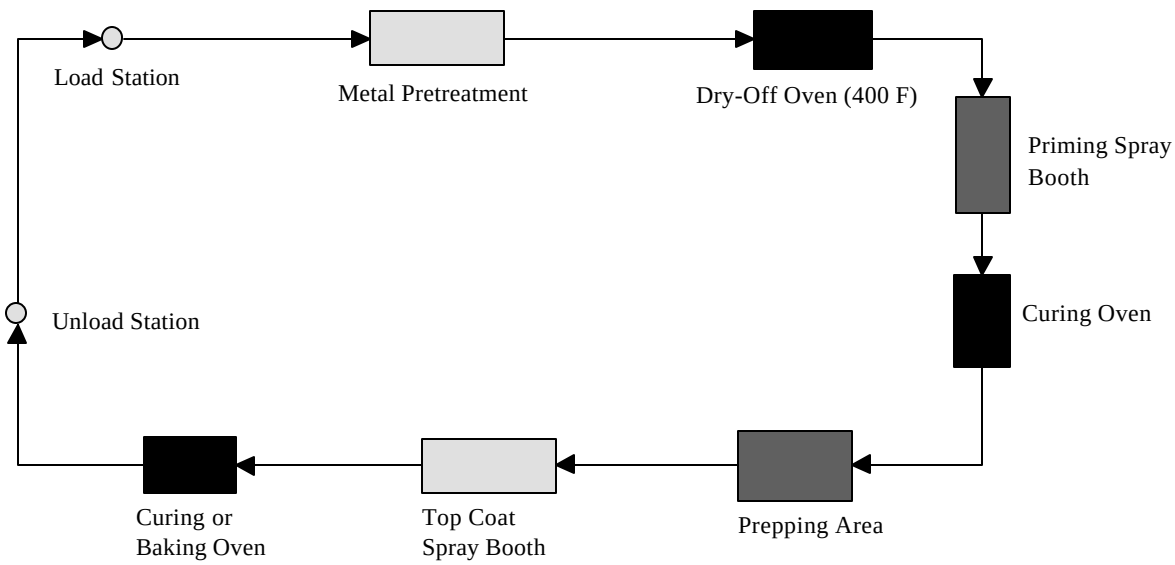

Counter-flow rinsing is an effective method for thoroughly washing contaminants from the work pieces after degreasing or phosphating, in addition, it is an effective method for minimizing water usage. Fundamentally, a counter-flow rinsing system is a sequence of baths in which replenished rinse water moves in opposite direction of the process flow. Thus, the work piece progresses from dirtier to cleaner rinse water. The system maximizes water use by replenishing the rinse water in the processing bath. Rinse water effluent is ultimately released to the wastewater treatment system as overflow from the first (dirtiest) bath in the sequence.

Benefits of Rinsing after Degreasing

- Removes surfactants and other contaminants that can undermine the integrity of the metal deposition and the quality of the finished piece.
- Minimizes the amount of drag-in from high alkaline degreasing baths to the near-neutral chemical etching bath.
- Reduces the need for raw chemicals therefore decreasing the cost.
- Increases the useful life of the chemical etchant.
- Longer bath life reduces wastewater.
- Thorough cleaning promotes proper adhesion.

Limitations of Rinsing after Degreasing

- Often requires large amounts of floor space.
- Capital and maintenance costs may be high.

Check for Cleanliness Prior to Etching

The cleanliness of the substrate as the work piece enters the phosphating step or as it leaves the final rinse tank should pass the water break-free or the towel-wipe test. In the water break-free test, a squirt bottle is used to pour deionized water over a cleaned substrate. The water should run off in a sheet rather than bead up. While the test may demonstrate that oils and greases have been removed from the work piece, it will not confirm that the surfactants from the degreaser have also been removed. To do this, one needs to rinse the

Notes

part with a small quantity of deionized water and then determine the pH of the water. This can easily be done using pH papers.

To determine that metal fines, smut, and other contaminants have been removed, a clean paper towel should be wiped across the wet surface of the work piece. Whereas the test may not always result in a perfectly clean towel, relative changes in cleanliness can be assessed.

Benefits of Checking for Cleanliness

- Demonstrates that oils and greases have been removed.
- Minimizes contamination of the chemical etching bath.
- Minimizes the amount of drag-in from high alkaline degreasing baths to the near-neutral chemical etching bath.
- Insures longer bath life that reduces wastewater and raw chemical usage.
- Indicates the effectiveness of the utilized rinses

Limitations of Checking for Cleanliness

- Does not confirm that surfactants from the degreaser have been removed.
- A combination of both the water break-free and the towel-wipe test must be used to ensure cleanliness.

Choosing a Phosphate Formulation and Qualifying the Phosphate Coating

Paints and coatings facility operators typically confer with chemical vendors in the selection of a phosphate formulation. Indeed, one vendor may be able to offer a better formulation than another vendor, especially if the performance requirements are unique.

The choice of formulation can be significant in terms of achieving optimum coating properties. It is especially prudent for the operator to discuss special requirements with a chemical vendor, particularly if the finished work piece will be subjected to aggressive environments. In some situations, laboratory tests may need to be conducted to verify that the selected coating will be able to provide the required finish. In general, choosing a formulation on the basis of price is inadvisable.

Benefits of Choosing the Proper Phosphate Formulation

- The proper etchant formulation will achieve optimum coating properties.
- Proper formulas will reduce waste stream of ruined pieces.

Limitations of Choosing the Proper Phosphate Formulation

- Lab tests may be required to determine the optimum formula.
- The cost of the optimum formula may be prohibitive.
- The optimum formulation may be more environmentally hazardous than a substitute.

Alternative Sealing Processes

Some operations subject work pieces to a final rinse bath after chemical etching to harden the deposited coating, providing an enhanced long-term corrosion resistance. This process step is included in operations for a wide range of industries, most of which pertain to high value work pieces. Sealing is accomplished with both a chromate and a nonchromate process. Typically, work pieces are sealed using a rinse of deionized water mixed with a small concentration of chromate or nonchromate additive.

- *Chromate Sealers* - seek out areas of the coating where the phosphate failed to convert the base metal. The chemicals in the chromate sealer then react with the exposed substrate, in much the same way as the phosphating process itself, to form a corrosive resistant film. Operators have used chromate-based rinses for many years as an effective means of sealing the phosphate coating on the work piece. Chromate rinse additives are based on either a hexavalent or trivalent chromium. While

Notes

both form pollutants of concern, hexavalent chromium is particularly toxic and is a suspected carcinogen; thus, residuals must be disposed of as hazardous waste, which can add significant costs to the process.

- *Nonchromate Sealers* - also form a protective film over exposed areas of the substrate, although not through a chemical reaction with the base metal. Several nonchromate sealant formulations have been developed, but their effectiveness for enhancing the durability of a work piece as compared with chromate-based sealers has yet to be fully established. Nonetheless, when the finished work piece will be used in applications requiring less-demanding corrosion resistance, nonchromate sealers can present an attractive alternative. The great advantage that nonchromate sealers hold over chromate based formulations is that they are non-toxic. Thus, an operator can realize significant benefits by reducing or eliminating the need to dispose of hazardous residuals.

Benefits of Alternative Sealing Processes

- Sealers harden the deposited coating, providing an enhanced long-term corrosion resistance.
- Nonchromate based sealers are non-toxic, therefore they reduce the cost of disposal.
- Nonchromate sealers can work in applications requiring less-demanding corrosion resistance.

Limitations of Alternative Sealing Processes

- Chromate sealers are toxic, therefore increasing the disposal cost.
- Chromate based sealers are suspected carcinogens.
- Non-toxic nonchromate based sealers cannot enhance the durability of a work piece as well as toxic chromate based sealers.
- Chromate sealers contain environmentally detrimental hexavalent or trivalent chromium.

5.6.3.2 Recycling

In process recycling phosphate baths and rinses can be used to extend bath life and reduce waste volumes. The recycling process is accomplished by raising the pH of an exhausted phosphate bath or collected spray drainage, which will precipitate out any heavy metal sludge. The wastewater can then be run through a centrifuge to collect the sludge into a cake, which must be disposed of as hazardous waste. For more information on recycling technologies to remove heavy metals and suspended solids, see Section 5.5, Cleaning and Degreasing.

A growing trend in phosphate waste recycling is to use ultrafiltration to separate and reuse rinse water and concentrates. This additional step maximizes water use and reduces the amount of wastewater discharged to local treatment works.

Benefits of In-Process Recycling

- Reduces the mass of materials being disposed.
- Reduces amount of chemicals used, thereby reducing raw chemical costs.
- Maximizes water use.
- The process takes place on-site, therefore reducing transportation costs.

Limitations of In-Process Recycling

- The hazardous sludge cake has to be disposed of.

5.7 Plating Operations

The following section provides a process description, waste description and a broad range of pollution prevention opportunities that can be implemented to improve plating operations.

Notes

5.7.1 Process Description

Metal finishing comprises a broad range of processes that are practiced by most industries engaged in manufacturing operations using metal parts. Typically, metal finishing is performed on manufactured parts after they have been shaped, formed, forged, drilled, turned, wrought, cast, etc. A "finish" can be defined as any final operation applied to the surface of a metal article in order to alter its surface properties to achieve various goals. Metal finishing operations are intended to increase corrosion or abrasion resistance, alter appearances, serve as an improved base for the adhesion of other materials (e.g., other metals, paints, lacquers, oils), enhance frictional characteristics, add hardness, improve solderability, add specific electrical properties, and/or improve the utility of the product in some other way.

Plating processes are typically batch operations, in which metal objects are dipped into and then removed from baths containing various reagents to achieve the desired surface condition. The processes involve moving the object being coated through a series of baths designed to produce the desired end product. These processes can be manual or highly automated operations, depending on the level of sophistication and modernization of the facility and the application. Most metal plating operations have three basic steps: (1) surface cleaning and preparation, (2) surface modification, and (3) rinsing or other work piece finishing operations to produce the final product.

5.7.1.1 Surface Cleaning and Preparation

Preparation cycles vary depending on the particular substrate being electroplated. Often only slight variations in substrate composition significantly influence the preparation process. Heat treating variations also contribute to the complications of preparation. Determining an optimum preparation process for a given material often becomes a matter of trial and error. Poor preparation of a substrate can result in loss of adhesion, pitting, roughened coating, lower corrosion resistance, smears, and stains. Because plating takes place at the exact molecular surface of a work, it is important that the substrate be clean and receptive to the plating. The soils encountered in electroplating processes can be organic, (e.g., oil greases, and other cleaning compounds) or inorganic, such as oxides and heat-treat scales. Some plating baths can clean surfaces and thus tolerate minimally cleaned surfaces, but the majority needs surfaces cleaned to near perfection. No simple, universal cleaning cycle exists for electroplating. Several methods and cleaning solutions may be used in a single-plating process.

5.7.1.2 Surface Modification

Surface modification is typically achieved through electroplating, which passes an electrical current through a solution containing dissolved metal ions and the metal object to be plated. The metal substrate serves as the cathode in an electrochemical cell, attracting metal ions from the solution. Ferrous and non-ferrous metal objects are plated with a variety of metals, including aluminum, brass, bronze, cadmium, copper, chromium, iron, lead, nickel, tin, and zinc, as well as precious metals, such as gold, platinum, and silver. Controlling a variety of parameters, including the voltage, amperage, temperature, residence times, and the purity of bath solutions regulates the process. Plating baths are almost always aqueous solutions; therefore, only those metals that can be reduced from aqueous solutions of their salts can be electrodeposited. The only major exception is aluminum, which can be plated from organic electrolytes. If the production allows, electroless plating is also used. Electroless plating follows similar steps to electroplating but involves the deposition of metal on a substrate without the use of external electrical energy.

5.7.1.3 Rinse

A final rinse typically follows the bath process, and is important in the removal of a thin film of plating solution from the surface of the substrate. Good rinsing requires good water, not too cold, vigorous agitation, and time. Water at 5-7°C is a poor rinse; water 30-35°C gives a good rinse. Time and agitation allows the rinse water to penetrate, to dilute, and to remove the substantive films. A two-minute dip in each agitated rinse has often produced good work having good adhesion, when one-minute dips have failed.

5.7.2 Waste Description

The plating industry is somewhat unusual among manufacturing industries at present because the vast majority of the chemicals used end up as waste. The current inefficiency of material use is due to the inherent characteristics of the processes employed where parts are immersed into concentrated tanks of

Notes

chemicals and subsequently rinsed with fresh water. The resultant wastewater makes up the greatest volume of waste material from plating operations.

Wastewater is generated during rinsing operations. Rinsing is necessary to remove the thin film of concentrated chemicals (i.e., drag-out) that adheres to parts after their removal from process baths (e.g., plating solution). Wastewaters are usually treated on-site. This treatment generates a hazardous sludge that must be disposed of in an approved landfill or sent to a recovery site for metals reclamation.

Residual metals in wastewaters discharged by plating shops to municipal sewer systems, as permitted, where it will be treated further. Process baths are discharged periodically when they lose their effectiveness due to chemical depletion or contamination. Accidental discharges of these chemicals also occur sometimes (e.g., when a tank is overfilled). These concentrated wastes are typically treated on-site or hauled to an off-site treatment or recovery facility.

With respect to air emissions, the greatest concerns with plating shops are solvents and chromium. Solvents are partly evaporated during degreasing operations. Contaminated liquid solvents are either recovered by distillation (on-site or off-site) or sent for disposal (incineration). Chromium is released to the air by plating and anodizing processes. Most shops do not have controls for organics; however, some larger plants use carbon adsorption units to remove hydrocarbons. Chromium emissions and other heavy metals are frequently controlled by the use of wet scrubbers. The discharge of these systems is sent to the wastewater treatment system and combined with other wastewaters for processing.

Plating also generates other miscellaneous sources of wastes, including floor wash waters, storm water, and chemical packaging wastes.

Exhibit 5.9 identifies the major waste streams from typical metal plating operations, as well as the major waste constituents of concern from both regulatory and environmental risk perspectives.

5.7.3 Pollution Prevention Opportunities

During the past 10 to 15 years, innovative members of the plating industry have made significant strides in developing and implementing preventative methods of pollution control. In some cases, waste minimization methods and technologies have been responsible for reducing waste volumes by up to 90 percent. Associated with the decrease in waste generation are reductions in end-of-pipe equipment purchases, improvements in effluent compliance, improvements in product quality, and significant cost savings in raw materials.

Exhibit 5.10 presents waste minimization opportunities applicable to the metal plating industry. It should be noted that many lower technology waste minimization options, including process recovery and reuse, improved operating procedures, and use of waste exchanges and off-site recovery options, represent significant opportunities for waste reduction often with relatively low investment requirements.

Exhibit 5.11 presents a more detailed identification of the specific waste reduction techniques that have documented applicability to metal plating processes and briefly describes the applications and limitations of each. All of these methods are described in detail in the body of the paper with discussions of the current use and applicability, limitations, and costs associated with purchasing, installing, and operating the various technologies.

Notes

Exhibit 5.9 Major Metal Plating Wastes and Constituents

Air Emissions	Key Constituents
Solvent releases from degreasing operations	Solvents
Chromium	-1,1,1-Trichlorethane
	-Triclorethylene
	-Perchloroethylene
Waste Waters	-Chloroflurocarbons
Rinse Water	-Methylene chloride
Spent Baths	-Acetone
Scrubber Blowdown	-Toluene
Cooling Water	-Methyl Ethyl Ketone
	-Methyl Isobutyl Ketone
	Metals
Solid and Hazardous Wastes	-Cyanide
Solvent Wastes	-Chromium
-spent contaminated solvents	-Cadmium
-still bottoms from solvent recovery	-Nickel
Spent Process Solutions	-Aluminium
-alkaline cleaners	-Copper
-acid etching solutions	-Iron
-plating solutions	-Lead
Waste Treatment Sludges	-Tin
	-Zinc

5.7.3.1 Source Reduction

Pollution from conventional plating methods is typically high because the vast majority of the chemicals used end up as waste. The current inefficiency of material use is due to the inherent characteristics of the processes employed. The main focuses in cleaner technologies for plating are:

- *Product Replacements* –could be used in place of the metal plating therefore eliminating the need for the conventional plating process in particular situations.
- *Alternative Processes* – replace the conventional plating process. They may perform as well as plating done by conventional methods, and reduce waste.
- *Process Efficiency* – reduces the amount of waste created during the traditional plating process.
- *Materials Management* – reduces the material usage through improved management practices.

Notes

Product Replacements

Product replacements may be utilized for decorative coatings, but for technical purposes metal coatings are essential. Hard coated metals are expected to resist acidic attack, combat high temperatures, and reduce friction. While paint and plastics have limited replacement values as decorative coatings, they cannot withstand the abuse that hard coated metals stand up to. Paint and plastics have been used as product replacements for hard coated metals successfully in very selective decorative coating applications. The act of eliminating the plating operation from a product design is best achieved during product design.

Exhibit 5.10 Waste Minimization/Pollution Prevention Methods and Technologies

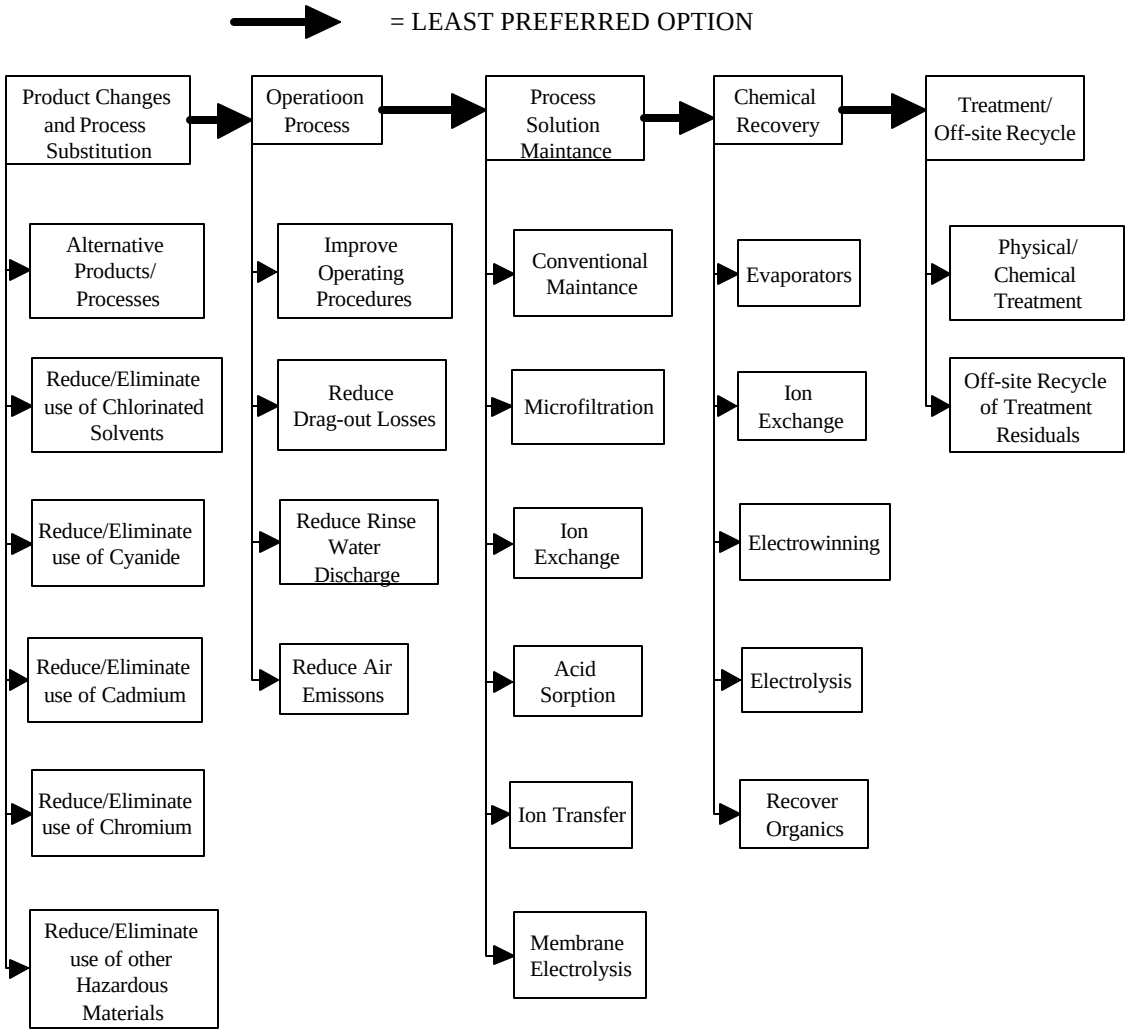

Alternative Processes

Recently, alternative processes to the conventional plating process have been developed. Viable replacements may be able to reduce or eliminate the wastes associated with the bath process. The alternative processes are separated into the following categories.

- Chemical Vapor Deposition
- Physical Vapor Deposition
- Thermal Spray Technologies

Exhibit 5.11 Waste Minimization Opportunities Available to the Metal Plating Industry

Category	Examples	Applications	Limitations
General Waste Reduction Practices	• Improved operating procedures • Drag-out reduction • Rinse-water use reduction • Air emissions reductions	• Applicable to all conventional plating operations • Should be considered standard operating procedures and/or good design • Cost benefits typically outweigh any necessary expenditures	• Existing facilities may be able to accommodate changes due to process configuration, space constraints, etc.
Alternative Processes	• Thermal Spray Coatings • Vapor Deposition • Chemical Vapor Deposition	• Primarily repair operations although they are now being incorporated into original manufacturing • Primarily high-technology applications than can bear additional costs • Expected to improve product quality and life	• Technologies in varying states of development; commercial availability may be limited in certain areas • Expense often limits application to expensive parts (e.g., aerospace, electronics, military) • May require improved process controls, employee training, and automation
Process Solution Maintenance	• Convention Maintenance Methods • Advanced Maintenance Methods • Process Monitoring and Control	• Conventional methods applicable to all plating operations	• Advanced methods may require significant changes in process design, operation, and chemistry • Application limited for some plating process/technology combinations (e.g., microfiltration not applicable to copper or aluminum)
Chemical Recovery Technologies	• Evaporation • Ion exchange • Electrowinning • Electrodialysis • Reverse osmosis	• Requires significant engineering, planning, and characterization of process chemistry	• Costs are highly variable for advanced methods • Applications must be carefully tailored to process chemistry
Off-Site Metals Recovery	• Filtration • Ion exchange • Electrowinning • Electrolytic Recovery	• Metal-bearing wastewater treatment sludge	• Waste materials must be acceptable to recyclers

Notes

Chemical Vapor Deposition

In Chemical Vapor Deposition (CVD) processes, a reactant gas mixture impinges on the substrate upon which a deposit is made. The different variations of CVD are distinguished by the manner in which the precursor gases are converted into the reactive gas mixture. Typically in CVD, gas precursors are heated to form a reactive gas mixture. A precursor material, otherwise known as a reactive vapor delivers the coating species. It is usually in the form of a metal halide, metal carbonyl, a hybrid, or an organmetallic compound. The precursor may be in either gas, liquid or solid form. Gases are delivered to the chamber under normal temperatures and pressures, while solids and liquids require high temperatures and/or low pressure in conjunction with a carrier gas. Once in the chamber, energy is applied to the substrate to facilitate the reaction of the precursor material upon impact. The ligand species is liberated from the metal species to be deposited upon the substrate to form the coating. Since most CVD reactions are endothermic, regulating the amount of energy input may control the reaction. The most useful CVD coatings are nickel, tungsten, chromium, and titanium carbide.

The steps in a generic CVD process are:

1. Formation of the reactive gas mixture;
2. Mass transport of the reactive gases through a boundary layer to the substrate;
3. Absorption of the reacts on the substrate;
4. Reaction of the absorbents to form the deposit; and
5. Description of the gaseous decomposition products of the decomposition process.

Benefits of Chemical Vapor Deposition

- Controls the microstructure and/or chemistry of deposited material.
- Evenly coats corners, holes, and irregularities.
- The CVD coating process does not involve a bath operation, therefore eliminating the environmentally hazardous waste released due to drag-out.

Limitations of Chemical Vapor Deposition

- The substrate must be thoroughly cleaned prior to deposition.
- Reacted and unreacted chemical vapors may be released to the environment if a proper exhaust system is not in place.
- The deposition chamber must be clean, leak-tight, and free from dust and moisture.
- Toxic, corrosive, and flammable materials are produced and must be recovered and disposed of.
- Very expensive start-up cost.
- Hazardous or toxic chemicals may be produced due to improper precursor chemical selection.

Physical Vapor Deposition

Physical Vapor Deposition (PVD) methods are clean, dry vacuum deposition methods in which the coating is deposited over the entire object simultaneously, rather than in localized areas. PVD technologies are generally classified into the following categories.

- *Sputtering* – is an etching process for altering the physical properties of the surface in which the substrate is eroded by the bombardment of energetic particles. The sputtering process has an in-situ cleaning effect, therefore does not require the substrate to be spotlessly clean. Sputtering deposits are typically thin, ranging from 0.00005 mm to 0.01 mm. Compared to other deposition processes, sputtering is relatively inexpensive.
- *Ion Plating* – is separated into either plasma based or ion beam enhanced deposition. In plasma-based ion plating the substrate is in the proximity to the plasma and ions are accelerated from the plasma by a negative bias on the substrate, while ion beam enhanced deposition the ions are

Notes

accelerated from an ion gun or other source. Titanium, aluminum, copper, gold, and palladium are typically coated with the ion plating method. A benefit of both ion plating methods is that the substrate does not have to be extremely clean before plating. Capitol costs for this technology are typically high; therefore it is used in applications where high value-added equipment is being coated.

- *Ion Implantation* – does not produce a discrete coating; the process alters the elemental chemical composition of the surface substrate by forming an alloy with energetic ions. All surface contaminants must be removed prior to plating using ion implantation.

All three PVD methods allow coatings to be deposited as thin as 0.00005mm and as thick as 0.025mm. Most commonly chromium, titanium, gold, silver, and tantalum are coated.

All reactive PVD hard coating processes combine:

1. A method for depositing the metal;
2. Combining with an active gas, such as nitrogen, oxygen, or methane; and
3. Plasma bombardment of the substrate to ensure a dense, hard coating.

Benefits of Physical Vapor Deposition

- Even deposition rates.
- The PVD coating process does not involve a bath operation, therefore eliminating the environmentally hazardous waste released due to drag-out.
- High resistance to friction.
- PVD typically requires less substrate cleaning than conventional plating therefore reducing the amount of cleaning solvents entering the waste stream.
- PVD does not add any new toxic waste streams.
- Good adhesion to the substrate.

Limitations of Physical Vapor Deposition

- High start up costs.
- The coating may be contaminated with other molecules if the work area is not properly prepared.
- PVD produces waste streams from blasting media and solvents, bounce and over spray particles, and grinding particles.

Thermal Spray Technologies

Thermal Spray coatings can be sprayed from rod or wire stock or from powdered materials. The material (e.g. wire) is fed into a flame where it is melted. The molten stock is then stripped from the end of the wire and atomized by a high velocity stream of compressed air or other gas, which propels the materials onto a prepared substrate or work piece. Depending on the substrate, bonding occurs either due to mechanical interlock with a roughened surface, due to localized diffusion and alloying, and/or by means of Van de Waals force (i.e., mutual attraction and cohesion between the surfaces). Thermal spray technologies can be categorized into the following five methods.

- *Combustion Torch/High Velocity Oxy-Fuel* – has a very high velocity impact, and coatings exhibit little or no porosity. Deposition rates are relatively high, and the coatings have acceptable bond strength. Coating thickness ranges from 0.000013 to 3.0 mm. Some oxidation of metallics or reduction of some oxides may occur, altering the coating's properties.
- *Combustion Torch/Detonation Gun* – produces some of the densest of the thermal coatings. Almost any metallic, ceramic, or cement materials that melt without decomposing can be used to produce a coating. Typical coating thickness ranges from 0.05 to 0.5 mm, but both thinner and thicker coatings can be used.

Notes

- *Combustion Torch/Flame Spraying* – is noted for its relatively high deposited porosity, significant oxidation of the metallic components, low resistance to impact or point loading, and limited thickness (typically 0.5 to 3.5 mm). Advantages include the low capital cost of the equipment, its simplicity, and the relative ease of training the operators. In addition, the technique uses materials efficiently and has a low associated maintenance cost.
- *Electric Arc Spraying* – produces coatings with high porosity and low bond strengths. Coatings can range from a few hundredths of a mm to almost unlimited thickness, depending on the end use. It can be used for simple metallic coatings, such as copper and zinc, and for some ferrous alloys. Industrial applications include coating paper, plastics, and other heat sensitive materials for the production of electromagnetic shielding devices and mold making.
- *Plasma Spraying* – is a variable technique, which can produce coatings a wide range of selected physical properties, such as coating with porosities ranging from essentially zero to high porosity. The spraying can achieve thickness from 0.3 to 0.6 mm, depending on the coating and the substrate material. Sprayed materials include aluminum, zinc, copper alloys, tin, molybdenum, some steels, and numerous ceramic materials.

Of the thermal spraying techniques, flame spraying and high velocity oxy-fuel are relatively inexpensive in comparison to the detonating gun, electric arc furnace, and plasma spray. The five techniques all follow the same basic steps summarized below.

1. *Substrate preparation* – usually involves scale, oil, and grease removal as well as surface roughening. Roughening is necessary for most of the thermal spray process to ensure adequate bonding of the coating material.
2. *Masking and fixturing* – limits the amount of coating applied to the work piece in order to remove over spray through time consuming grinding and stripping after deposition.
3. *Coating* – is affected by particle temperature, velocity, angle of impact, and extent of reaction with gases during the deposition process. The geometry of the substrate also effects the coating since the special properties vary from point to point on each piece.
4. *Finishing* – is necessary in many applications. Typically after the deposition process, grinding and lapping techniques are utilized.
5. *Inspecting* – involves the verification of dimensions and a visual examination for pits, cracks, etc.
6. *Stripping* - when necessary, is done chemically in acids or bases, electrolytically, or in fused salts. If none of these techniques are possible, mechanical removal by grinding or grit blasting is necessary.

Benefits of Thermal Spray Technologies

- Thermal spray technologies do not involve a bath operation, therefore eliminating the environmentally hazardous waste released due to drag-out.
- Efficiently uses materials consequently reducing the amount of waste generated, and the cost associated with raw materials.
- Variability in the process allows for a wide range of thickness and porosities.
- Can normally be stripped chemically, electrolytically, or in fused salts.

Limitations of Thermal Spray Technologies

- High noise generation (between 80 db to more than 140 db).
- Environmental concerns including the generation of dust, fumes, over spray, and intense light.
- Nondestructive testing of the coating has largely proven unsuccessful.
- Water curtains designed to capture over spray and fumes discharge contaminated wastewater.

Notes

Process Efficiency

Through process efficiency the waste streams involved with conventional plating systems can be reduced. Small changes in processes can often net large results in preventing pollution and cost reduction. The following procedures can be used to maximize process efficiency.

- Drag-out reduction.
- Rinse water reduction.
- Conventional maintenance methods.
- Advanced Maintenance technologies.

Drag-Out Reduction

Drag-out of process fluid into rinse water is a major source of pollution in any plating shop. The volume of drag-out discharged from a process is determined by some factors that cannot be altered easily, such as part shapes and process fluid concentrations. The effects of many other contributing factors, however, are readily reduced by common techniques. Reduction of drag-out not only reduces the mass of pollutants reaching the wastewater stream but also reduces the amount of chemical loss suffered by the process. Because most drag-out reduction methods require only operator training or small process changes, the cost savings and other benefits realized quickly offset any implementation expenses incurred. Drag-out reduction techniques include the following.

- *Plating Solution Control* – minimizes drag-out by reducing bath viscosity with the lowest concentration or highest temperature possible, reducing surface tension with wetting agents, preventing the build-up of contaminants in process tanks by monitoring carbonate accumulation, and using high purity electrodes to reduce impurities from falling out and contaminating the solution.
- *Withdrawal Rates and Drainage* – are critical to minimizing drag-out. Maximizing the drip time, using drip shields or boards to capture and return drag-out as a rack or barrel is transported away from the process, using tanks to collect drag-out, and utilizing air knives to enhance drainage will return the maximum drag-out volume.
- *Positioning of Parts on the Rack* – is important both for quality as well as drag-out reduction considerations. The best position is typically determined by experimentation. Parts should not be racked over one another, but they should be positioned to consolidate runoff streams, and oriented so that the lowest profile emerges from the fluid as the rack is removed.
- *Rinsing Over Process Tanks* – with fog or sprayers can be utilized in heated processes, which provide enough evaporation headroom to accept additional fluid. The process can cause complications with ventilation systems by possibly increasing the airborne pollutant load.
- *Drag-Out Tank* – is a rinse tank that is filled with water but is stagnant and drag-out accumulates in the tank. The contents of the tank are used to replenish drag-out and evaporation losses occurring in the process tank. Water is added to the drag-out tank to maintain the operating level.
- *Drag-In Drag-Out Rinse*– is positioned before and after the plating tank to ensure that the drag-out is returned at the same rate at which it is removed. The procedure is most effective in low-temperature processes, but requires an extra processing step and builds up contaminants faster than typical processes.

Benefits of Drag-Out Reduction

- Up to 50% reduction in drag-out loss of chemicals.
- Start-up costs are quickly recovered.
- Lower viscosity reduces the mass of the constituents in the drag-out.
- Higher quality coating can be achieved.

Notes

Limitations of Drag-Out Reduction

- May cause ventilation problems.
- Time loss due to process.
- Increased drying time can accelerate oxidation and passivation.
- Staining can occur if parts dry completely.

Rinse Water Reduction

Water usage cannot be reduced indiscriminately without risking process problems. Rinse tanks must not exceed maximum concentration of contamination, or part quality will suffer. However, several inexpensive methods can significantly reduce water consumption without affecting rinse contaminant concentrations. They are as follows.

- *Tank Design* – should allow for rinsing of the largest parts, and all tanks (rinse and process) should be the same size. Inlet and outlet points should be at opposite sides of the tank and the flow into the tank should be distributed. Agitation may be achieved through air spraying or other methods.

- *Flow Controls* – will reduce waste by closely monitoring the flow. Timer release controls regulate flow by opening and closing valves at set times, while conductivity controllers regulate flow based on rinse water conductivity. When the conductivity reaches a set point, the valve is opened and water flows through the tank. When the conductivity falls below a set point, the valve is shut-off.
- *Rinse Configuration* – effects the amount of drag-out that is recovered. A simple overflow rinse is very inefficient. A drag-out rinse or counterflowing rinse series inserted between the overflow rinse and the process is much more efficient. A counterflowing rinse series consists of a series of tanks where fresh water enters the tank farthest from the process tank and overflows into the next tank closer to the process tank, in the opposite direction of the work flow. As work runs through a counterflowing series, the first tank becomes more concentrated than the next. The flow rate is calibrated to achieve the desired concentration in the last, or cleanest tank.

Benefits of Rinse Water Reduction

- Reduced water consumption and corresponding water costs.
- Increased waste treatment efficiency from decreased throughput.
- Size reduction of future waste treatment and pollution control technologies.
- Reduction in use of treatment chemicals.
- Allows for shorter dwell times.

Limitations of Rinse Water Reduction

- Flow controls have to be automated; manual valves are difficult to control.
- Set-up often requires large floor space.

Conventional Maintenance Methods

Maintaining the bath plating solutions can prolong their use. By removing the contaminants in a bath solution, fewer chemicals enter the waste stream and fewer chemicals are also required. The most common conventional bath maintenance method is filtration. Nearly all plating baths require filtration to remove suspended solids that would otherwise adhere to the surface of the parts and cause rough plating. Small tanks can be filtered efficiently by in-tank designs, while larger tanks require external pump and filter assemblies. The disposable cartridge filters are typically fabricated wound or woven plastics, or sand and diatomaceous earth.

Notes

Plating bath contaminants can also be removed through the following techniques to extend the bath life.

- *"Dummy Platting"* – or electrolysis is a method of reducing the mass of contaminant metals in a plating bath by plating them onto a dummy panel. During dummy plating, a current density much lower that that used for normal plating is applied.
- *Carbonate Freezing* – is applicable to sodium-based cyanide plating baths. When cooled to a temperature of approximately 3°C, sodium carbonate crystals form and can be removed easily.
- *Carbon Treatment* – is a common method of reducing organic contamination in plating baths. Carbon treatment may only consist of occasionally substituting carbon for normal cartridges in the existing filtration equipment.

Advanced Maintenance Technologies

Advanced maintenance technologies are relatively new, but they are employed to treat specifically difficult to maintain bath solutions. The following four treatments typically utilized are:

- *Microfiltration* – is a membrane-based technology applied primarily to aqueous and semi-aqueous cleaning solutions. This technology separates emulsified oils and other colloids from the cleaner chemistry, thereby extending the life of the process bath.
- *Ion Exchange* – is applied to chromic acid solutions to remove cations, such as copper, zinc, or iron that are introduced into plating baths from racks and parts. For chromic acid purification, ion exchange competes with ion transfer and membrane electrolysis.
- *Acid Sorption* – is applied to acid solutions, such as pickling or sulfuric acid anodizing baths, to remove dissolved metals.
- *Ion Transfer* – is a common technology with applications generally restricted to chromic acid plating baths, etched, and anodizing baths. The goal of this technology is to selectively remove cations from chromic acid process fluids.

Benefits of Process Bath Maintenance

- Extends bath solution life.
- Reduces chemical use.
- Reduces waste disposal.

Limitations of Process Bath Maintenance

- Start-up costs can be expensive.
- Expensive start-up and maintenance costs for certain processes.
- Can cause time delays in the plating process.

5.7.3.2 Recycling

Chemical recovery technologies either recover drag-out and return it to the process or recover a constituent of the drag-out chemistry, usually a dissolved metal, and recycle it in another process. Recovering drag-out reduces raw material costs by returning otherwise lost components to the process and reduces the mass of regulated ions reaching the waste treatment system, which lowers costs and aids in complying with discharge limits. Recycling takes places both on-site and off-site.

On-Site Recycling

On-site recycling technologies typically recover plating solution lost from drag-out in the rinse tanks; usually a dissolved metal. The following briefly summarizes the types of technology commonly used.

- *Evaporation* - with atmospheric and vacuum systems are the most common chemical technology used in the plating industry. Atmospheric evaporators are most common, and relatively inexpensive to purchase, and easy to operate. Vacuum evaporators are mechanically more sophisticated and

Notes

more energy efficient. Additionally, with vacuum evaporators, water lost as vapor can be recovered as a condensate and re-used in the plant.

- *Ion exchange* - is a versatile technology that can be a major component of a low- or zero-discharge configuration or it can be employed to selectively remove certain cations from a rinse stream. In either case, ion exchange can only be applied to relatively dilute streams, and is often used to recycle rinse water.
- *Electrowinning* - is a well-known and common recovery technology. It is limited, however, because only the metal portion of the process chemistry is recovered, making direct return of metal-depleted drag-out usually impossible. The technology is generally inexpensive both to purchase and operate. Electrowinning is applied to drag-out fluids, process baths, or ion exchange regenerate, all of which are relatively concentrated with metal ions.
- *Electrodialysis* - is employed with much less frequency for metal recovery than some other technologies, such as ion exchange or evaporation. The most common application of electrodialysis is the recovery of nickel from rinse water. One advantage unique to this technology is that the organic molecules are prevented from entering the concentrate flow and therefore are not returned to the process tank, making electrodialysis particularly suitable for recovery of process fluids in which an undesirable build-up of organics occurs.
- *Reverse osmosis* - is a membrane filtration technology that has been applied to a single rinse stream from a process or to a mixed stream from several processes. The portion of the flow that passes through the membrane is usually recycled as rinse water. The portion of the flow rejected by the membrane and containing most of the dissolved solids is often suitable for direct return to the process tank. Reverse osmosis is a good component of low- or zero-discharge configuration.

Benefits of On-site Recycling

- Reduces raw material costs.
- Can remove both organic and non-organic materials.
- Reduces mass of regulated ions reaching the waste treatment system.
- Removes liability associated with land disposal from generator.

Limitations of On-site Recycling

- Can require expensive engineering and planning stages.
- Equipment must be customized to each system.
- Capitol and operational costs can be high.

Off-Site Recycling

Approximately one-third of U.S. plating shops send their metal bearing wastewater treatment sludges to off-site metals recycling companies, rather than to land disposal. The recycling companies separate the metals from the sludges and convert them to usable materials. Off-site metals recycling services in the United States were previously limited to spent solvents, precious metal wastes, and high purity common metal wastes. Since 1985, there has been a steady increase in the use of off-site recycling, primarily because of the availability of recycling services for wastewater treatment sludges, rising costs for land disposal, and increased generator concern over liability associated with land disposal.

Benefits of Off-site Recycling

- Reduces liability associated with land disposal from generator.
- The amount of waste going to land disposal is reduced.
- Organic and non-organic materials can be removed from baths.

Notes

Limitations of Off-site Recycling

- Slightly more expensive than land disposal.
- Limited to spent solvents, precious metal wastes, and high purity common metal wastes.

5.8 Paint Application

The following section provides a process description, waste description and a broad range of pollution prevention opportunities that can be implemented to improve paint application operations.

5.8.1 Process Description

Paint application is the process of applying an organic coating to a substrate. The purpose of applying a paint coating is to provide a protective barrier against corrosion and damage to the part surface, as well as, enhance the aesthetic appeal of the part being manufactured.

The complete process of applying paint to a part generally consists of (1) cleaning and degreasing, (2) chemical etching (optional), and then (3) applying the paint. This section deals only with the third step, application of the paint. Pollution prevention information for reducing the wastes generated from the first two steps is contained in the following parts of this document: Section 5.5, Cleaning & Degreasing; and Section 5.6, Chemical Etching.

5.8.2 Waste Description

Wastes generated from paint application may include air emissions of volatile organic compounds (VOCs), hazardous air pollutants (HAPs), and heavy metal particulates; excess paints and coatings, empty containers, disposable brushes and rollers, dirty solvents and thinners used for equipment cleanup, dirty filters from dry filter paint booths, and paint sludge from water wash paint booths. The toxicity and hazard of the wastes generated is dependent on the concentration of solvent remaining in the waste and the presence of heavy metals such as lead and chromium compounds used in paint formulations.

The largest source of air emissions is from the actual step of applying the paint in the form of overspray. The greater the overspray, or lower transfer efficiency, the more waste is generated over-all in the form of air-emissions, clean-up materials, and paint booth filters or sludge.

5.8.3 Pollution Prevention Opportunities

Pollution prevention opportunities for paint application processes are classified according to the waste management hierarchy in order of relevance; first, source reduction techniques, then secondly, (in-process) recycling options.

5.8.3.1 Source Reduction

The preferred method of pollution prevention is source reduction. In the case of paint application processes the keys to source reduction are:

- Eliminating the need to paint the part through product re-engineering;
- Using environmentally friendly coating material; and
- Improving transfer efficiency through improved equipment and operator training.

Each of the three source reduction methods is described below with associated benefits and limitations. The information contained below is not to be considered completely inclusive of all environmentally preferred paint application methods or formulations, nor is its intent to be exhaustive of all considerations. Prior to implementing an environmentally preferred paint application method or formulation a thorough investigation of process requirements (material compatibility) and an appropriate financial review (i.e., payback period, etc.) should be conducted.

Notes

Eliminate the Need to Paint

Eliminating the need to paint a part due to better process engineering and design would be the highest form of source reduction. Although one should be cautious that the environmental impacts associated with the alternative design are not worse over-all.

The need for painting can sometimes be avoided by selecting materials that combine both function and aesthetics. Use of injection-molded plastic shells in place of painted metal cabinets is widely practiced in the electronics industry. Building construction employing the use of vinyl siding, PVC and FRP plastics, precolored concrete, and metal trim materials such as stainless steel, copper, bronze, and aluminum are known.

The area of surface-coating-free materials is not as widely explored nor marketed as non-, low-VOC coatings as a means to reduce the environmental impacts from painting operations. In addition, to implement this form of pollution prevention requires forethought during the design of the product, and typically is cost prohibited to implement after the product design stage.

Benefits of Eliminating the Need to Paint

- Eliminates the need to apply paint, in turn, eliminating all environmental impacts associated with paint application and paint removal over the life span of the product.

Limitations of Eliminating the Need to Paint

- Generally, can only be implemented during product design.

Use Environmentally Friendly Coating Material

Traditional solvent-based coatings contain high levels of volatile organic compounds (VOCs) that are emitted into the air during paint operations. VOCs contribute to ground level smog formation and other forms of air pollution. Under the Clean Air Act, limitations have been set as to the amount of VOCs that are allowed in paints and coatings. While limits are based on specific industry group and application, the VOC limit of 3.5 lbs/gal is considered reasonably available control technology (RACT) in most states. Coatings with VOC contents of less than 3.5 lbs/gal are generally marketed as low-VOC coatings.

Low-VOC or environmentally friendly paint coatings are currently available in a wide variety of formulations. The following list identifies the most common types of formulations available.

- Powder Coatings
- Water-Borne Coatings
- Solvent-Borne Coatings
- Specialized Coatings

Each formulation has its own unique performance qualities and application requirements. Prior to performing a material substitution it is necessary to match the appropriate environmentally substitute to your operational needs. A basic overview of each type of formulation and its associated benefits and limitations are provided below to facilitate in the material substitution selection process.

Powder Coatings

Powder coatings are particularly popular for their low VOC content. For many applications, powder coatings offer cost advantages over either solvent- or water-borne liquid technologies. The act of applying powder coatings does not contribute to air, water, or hazardous waste pollution.

A powder coating facility does, however, generate some pollution, primarily from two associated processes. The first and most important involves surface preparation. Powders are applied over well-degreased surfaces, which have been phosphated. The second important pollution-generating process is the stripping of powder coating from hooks and rejected parts.

The two basic steps in the powder coating process are described on the next page.

Notes

- Applying the Coating – can be done through three primary methods including electrostatic attraction by corona charge, elecrostatic attraction using turbo-charging guns, and fluidized beds. None of the coating methods involve solvents or generate hazardous wastes. Also clean-up efforts are minimal, benefiting both pollution prevention and time and materials resources.

- Curing the Coated Part – entails heating the powder-coated part in a convection or infrared oven at temperatures between 325 °F and 400 °F for approximately 8 to 20 minutes. When the powder coating is cured, some vapors, approximately 0.5 to 5 percent by weight of powder coating, are emitted into the atmosphere. These are comprised mainly of water and some organics. The organics are not solvents, but rather plasticizers or resins emitted at the high baking temperature. It is questionable whether the air emissions are truly VOCs. In fact, most air pollution regulatory agencies assume that the emissions from powder coating operations are essentially zero; therefore, operators are usually not required to measure or record their emissions. Facility personnel should consult the regulations for their area for applicable regulations

Benefits of Powder Coatings

- The act of applying powder coatings does not contribute to air, water, or hazardous waste pollution.
- VOC emissions are essential zero.
- Clean-up efforts are minimal, benefiting both pollution prevention and time and materials resources.

Limitations of Powder Coatings

- The substrate has to be completely clean before powder coating, therefore introducing the wastes associated with degreasing, cleaning, and etching.
- The stripping of powder coating from hooks and rejected parts produces pollution.
- The curing process emits vapors, at 0.5 to 5.0 percent by weight, of the powder coating.

Water-Borne Coatings

The term "water-borne" describes coatings in which the predominant solvent is water. Organic solvents (VOCs) are also used but, for the most part, their concentration is small. In many formulations the ratio between the amount of water and organic solvent is 80:20.

The organic solvents, often referred to as co-solvents, enhance the formulation of the coating film, especially during the drying process when the water is evaporating from the deposited coating. As resin manufacturers develop new resin technologies, they are reducing the amount of co-solvent required to form the film. Currently, new formulations exist that contain no co-solvents, and consequently have zero VOCs. Manufacturers do not yet have a long-term performance history; therefore, most end-users generally consider the more conventional water-borne coatings.

When dealing with water-borne coatings, the end-users must thoroughly understand the terminology most regulations use. For instance, 1.0 gallon of a water-borne coating contains many ingredients: the resin (or binder), pigments, extender pigments, coalescing agents, a small quantity of co-solvents, and usually a fairly substantial amount of water. The volatile portion of the coating comprises the co-solvents and water. In a gallon can, the co-solvents, which are considered to be the VOCs, may account for less than 1.0 pound. In other words, the VOC content of the coating may only be 1.0 pound/gallon. The VOC regulations, however, require that the VOC content of the coating be calculated as if no water were in the coating. Depending on the coating formulation, the VOC content, less water, may be considerably higher, such as 2.0 pounds/gallon or more.

The classification of water-borne coatings is further sub-divided into the following categories.

- *Water-Borne Air/Force Dry Alkyds, Acrylics, Acrylic-Epoxy Hybrids* – are the most common type of water-borne coatings for metals, which air- or force-dry at temperatures below 194ºF. Water-reducible, or water thinnable, alkyds and modified alkyds are modified polyesters that have high acid values and employ special chemical blocking agents such as carboxylic acid functionalities. Although alkyds and modified alkyds may take longer to dry, the resulting coatings have gloss, flow,

Notes

and leveling properties similar to their solvent-borne counterparts. The acrylic latexes include other polymers such as vinyl acrylic and styrene acrylic. The resins are high molecular weight polymers dispersed as discrete particles in water. Acrylic latexes are known for their good exterior durability and excellent resistance to ultraviolet (UV) degradation. In outdoor exposure, they retain their original gloss and color over long periods. Acrylic epoxy hybrids, another type of water-borne air/force dry alkyd, comprise two-or three-package systems in which emulsified epoxies cross-link with aqueous acrylics. Most acrylic epoxy hybrid formulations are corrosion resistant and can produce finishes that have very good gloss, hardness, flexibility, alkali, and abrasion resistance. Unlike conventional solvent-based epoxies, some mixed water-borne coatings have pot-lives of up to 36 hours at reasonable ambient temperatures.

- *Water-Borne Epoxy Water Reducible Air/Force Dried Coatings* – can be cured at room temperature, or below 194 °F. Manufacturers supply these coatings as two- or three- package systems. The most commonly available water-reducible epoxies are formulated as primers complying with military specifications MIL-P-53030 (lead- and chromate-free) and MIL-P-85582 (containing chromates). As primers, they are commonly specified for steel weldments, such as automotive chassis, cabs, truck bodies, military hardware, steel and aluminum frames, cold rolled steel panels and cabinets, aerospace components, and electronic components.

- *Polyurethane Dispersions* – are water-borne systems that can air/force dry at temperatures below 194ºF. Essentially, they are polyurethane lacquers dispersed in water; therefore, as the water evaporates, the coating film forms. No other curing mechanisms take place. Polyurethane dispersions can be useful on metal parts, much like the conventional two-component polyurethanes, the primary focus at the present time is in the wood finishing industry.

- *Water-Borne Baking Finishes: Alkyd, Alkyd-Modified, Acrylic Polyester* – cure at elevated temperatures, usually well above 250 °F. Cross-linking occurs by formulating the basic resin with aminoplast resins such as melamine formaldehyde. Because of the high temperature-curing requirement, these coatings are generally not appropriate for heat-sensitive substrates, such as plastics. Formulations are available that satisfy 3.0 lb./gal (360 g/L), less water, with some below the 2.3 lb./gal (275 g/L) levels. The VOCs including water are in the 1.5 to 2.0 lb./gal (180 to 240 g/L) range. Compared with their air-forced dried counterparts, they have higher VOCs on both a "less water" and "including water" basis. These products exhibit properties such as hardness, mar and abrasion resistance, and excellent color and gloss retention, even when exposed to sunlight, chemicals, detergents, and solvents.

Benefits of Water-Borne Coatings

- Low VOC, RACT compliant, coating.
- Can be spray applied with standard equipment.
- Low fire hazard due to high water content.
- Generally, have a low toxicity due to reduced concentrations of organic solvents.
- Can clean spray equipment and ancillary equipment with tap water.
- Suitable for coating steel, aluminum, galvanizing, plastic, wood, and architectural substrates.
- Available in a wide range of colors and gloss levels.

Limitations of Water-Borne Coatings

- Compared with 2-part polyurethanes or baking water-reducibles, they have poorer exterior durability and poorer resistance to salt spray, humidity, chemicals, and solvents.
- Although the lower concentrations of solvents in their formulations benefit pollution prevention, this also causes water-borne coatings to be more sensitive to substrate cleanliness than most solvent-borne coatings.

Notes

- Some water-borne epoxy water-reducible air/force dried coatings contain chromates, and therefore require disposal as hazardous waste.

Solvent-Borne Coatings

Although air pollution agencies actively promote water-borne coatings, all solvent-borne coating cannot yet be replaced. Some companies will require solvent-borne coatings into the 21st century. Fortunately, VOC contents are gradually decreasing, viscosities are becoming manageable, and paint chemists continue work on developing new solvents that are not VOCs, hazardous air pollutants (HAPs), or ozone depleting compounds (ODCs). These new solvents may offer a wide range of new opportunities.

The classification of solvent-borne coatings is further sub-divided into the following categories.

- *Solvent-Borne Alkyds and Modified Alkyds That Air or Force Dry* – are basically oil-modified polyesters that form from a reaction between an alcohol and an organic acid. Each combination has its own distinctive chemical and physical properties. In addition, properties of alkyds such as hardness, gloss retention, color retention, sunlight resistance, etc.; can be improved by modifying alkyds with other resins. Typical modifications add styrene, vinyl toluene, acrylics, silicone, or other polymers. Any of these modified products are more commonly known as modified alkyds.

- *Alkyd Derivative Combinations That Cure By Baking* – include high sold alkyds, acrylics, polyesters oil-free, melamine- and urea-formaldehyde, and phenolics. Unlike the air/force dry alkyds, this group of coatings provides excellent physical and chemical properties. The primary difference is that cross-linking of the resins takes place when the coating reaches a certain minimum temperature. For most such coatings, curing takes place at temperatures above 250 °F, but the curing time may be too long (over 30 minutes) for most production painting facilities. These coatings have properties similar to water-borne alkyd-type baked coatings. As with the water-borne coatings, these solvent-borne counterparts are commonly applied to steel shelving, steel racks used in stored and warehouses, metal office furniture and equipment, and large appliances (e.g., dishwashers, refrigerators, etc.).

- *Catalyzed Epoxy Coatings* – constitute the counterparts to the water-borne epoxy coating that can achieve heavier film builds for many applications. Most commonly, these coatings are air- or force-dried, two-component materials compromising two separate packages. Component A being the epoxy resin and component B being a polyamine, or some other resin. Catalyzed epoxies are beneficial when requiring resistance to many chemicals, solvents, and alkalies, such as soaps and detergents. In addition, these coatings have excellent resistance to fresh water, salt water, and hot water. For these reasons they are a popular choice for protecting structures such as offshore drilling platforms, ships, and bridges, where resistance to marine environments is critical. Facilities also use them to coat industrial and potable water tanks and pipelines. Compliant epoxies are available that meet military specifications such as MIL-P-23377 (primer), MIL-P-53022 (primer), MIL-C-22750 (topcoat), and MIL-P-24441 (primer and topcoat systems).

- *Catalyzed Two-Component Polyurethanes* – are formed by the reactions of a polyisocyanate with a polymer that contains hydroxyl functionality. Two-component polyurethanes are supplied in two separate containers, of which the first is component A and the second is component B. Component A can either be clear or pigmented and offers a wide range of colors and gloss levels. The second container, component B, is the curing agent. When end-users mix components A and B according to the manufactures' prescribed ratios, the polymers react to form a highly cross-linked polyurethane. Facilities select polyurethanes for applications requiring a superior finish including aircraft skins, missiles, machine tools, tractors, etc.

- *Moisture Curing Polyurethanes* – have an interesting mechanism. When a polyhydroxy resin pre-reacts with a polyisocyante, but not completely, some unreacted isocyanate groups remain. The coating then cures in the presence of moisture from the air. Although many would prefer these single-component polyurethanes to two-component products, few companies currently sell moisture-curing polyurethanes because they are difficult to manufacture. The complicating issue is that moisture must be eliminated from all ingredients.

Notes

Benefits of Solvent-Borne Coatings

- Through research, VOC contents are gradually decreasing.
- New products have more manageable viscosities.
- High solid coatings can perform well below RACT levels.
- Solvent-borne coatings are the least expensive of the RACT compliant systems.
- Coatings are available in a wide range of colors and gloss levels.
- Coatings often exhibit excellent performance properties such as good chemical and solvent resistance, hardness, mar resistance, gloss, and ultraviolet resistance.
- Good adhesion is offered on a number of different substrates including most metals, plastics, wood, ceramics, masonry, glass, etc.

Limitations of Solvent Borne Coatings

- Solvent-borne coating often barely meet the RACT limits.
- Solvents contain VOCs, hazardous air pollutants (HAPs), and ozone depleting compounds (ODCs).
- Typically have higher VOCs than alternative methods.
- Solvents pose a fire risk.
- There are potential health risks inherent to working with solvents.
- The high viscosity of the coating can affect product quality.
- Most solvent-borne coatings can not meet the strict Californian RACT limits.
- Epoxy coatings have relatively poor resistance to ultraviolet light, and improper application can cause severe health problems in operators.
- Few companies currently sell moisture-curing polyurethanes because they are difficult to manufacture.

Specialized Coatings

Specialized coatings have a narrow window of application. For some end-users, one of these technologies will be the ideal choice. However, they are unlikely to make a significant penetration into the total coatings market.

The range of specialized coatings is explained below.

- *Autodeposition* – is cost-effective for large coating users, whose annual throughput of metal is at least 1,000,000 square feet, but is generally not a viable option for small or medium-sized coating user. During the autodeposition process, a resin in the form of latex is electrochemically deposited on steel surfaces. The process is currently limited to steel, but the steel does not require pretreatment with a phosphate coating. While the process can eliminate phosphating, it still requires superior cleaning that may comprise several stages including (1) a 1 minute alkaline spray clean, (2) a 2 minute alkaline immersion, (3) a spray or dip plant water rinse, and (4) a 5 to 10 second deionized water spray rinse. The end products consist of a pigmented water-dispersible (latex) resin, hydrofluoric acid, hydrogen peroxide, and deionized water. No solvents are used in the coating process.
- *Electrodeposition* – is predominantly utilized by large coating users whose annual throughput of metal is at least 2,000,000 square feet. This process deposits the coating electrochemically onto the metal surface with the aid of a DC current. Prior to coating, the metal parts pass through a multistage cleaning and treating process. Thorough cleaning precedes a phosphate process, which might include chromate or chromic acid seal rinse and at least one deionized water rinse. Electrodeposited coating have approximately the same VOC content as conventional baking water-

Notes

borne coatings. Hazardous waste disposal and the discharge of contaminated water, however, are considerably less.

- *Radiation Cured Coatings* – cure when they are exposed to specific wavelengths of ultraviolet (UV) or electron beam (EB) radiation. VOC emissions are very low, even approaching zero for some formulations because curing takes place without the need for solvents to evaporate. While EB coatings receive energy from an electric heated filament or cathode, low-pressure mercury arc lamps generate the energy to cure the UV curable coatings. In order to ensure a consistent film cure, the mercury arc lamps must be positioned within a few inched of the coated substrate. This is why the substrate must have a very simple geometry, such as a flat or uniformly round shape. Adding colored pigments to the formulation retards curing and extends curing times; therefore, most of the coatings being used are clear.

- *Unicarb System* – is designed to use liquid carbon dioxide (CO_2) as a solvent for coatings. Because of the excellent solubility characteristics of CO_2 (non VOC), additional solvents can be added to the conventional or high solids coating resins. The Unicarb System is a two component delivery system, where the coating resin and CO_2 are feed to and mixed at the spray gun. The coating viscosity drops to a manageable level and excellent atomization takes place.

Benefits of Specialized Coatings

- Radiation cured coatings and autodeposited coatings can have VOC contents that approach zero.
- Autodeposition and electrodeposition generate minimal water pollution.
- Autodeposition and electrodeposition pose little or no fire hazard.
- Autodeposition coatings are non-toxic.
- Autodeposition and electrodeposition have high transfer efficiencies, therefore minimizing waste.
- Electrodeposition can be applied to steel, galvanized steel, and aluminum, to provide a hard, flexible, corrosion resistant coating.
- Vapors for radiation-cured coatings are easily exhausted with no measurable air quality damage.
- Extremely short curing times are possible with radiation curing.
- The Unicarb System can reportedly reduce VOC emissions by as much as 50 to 80 percent, and increase transfer efficiency by up to 30 percent.

Limitations of Specialized Coatings

- Specialized coatings are not applicable in most situations.
- Autodeposition and electrodeposition are only cost-effective for large production shops with high throughput.
- Autodeposition is only applicable for steel substrates.
- Radiation cured coatings are limited to substrates with simple geometries, such as flat or uniformly round shapes.
- Health concerns have been raised in the radiation curing industry over operator exposure to hazardous vapors.
- The capital expense associated with switching from a conventional system to Unicarb is relatively high.

Improve Transfer Efficiency

Transfer efficiency is defined as the ratio of the mass (or volume) of solid coating deposited on a substrate to the mass (or volume) of solid used during the application. Improving the transfer efficiency of

Notes

the equipment used to apply the paint directly reduces the amount of waste and air emission generated from the application through source reduction.

The most important equipment to affect transfer efficiency, and thus pollution prevention, in a paint and coating facility is the spray gun. The conventional air atomizing spray gun described in the process description section is considered to have a low transfer efficiency, therefore, creating excessive air emissions and clean-up wastes than necessary to apply paint to a typical part. Currently, there are four basic types of high transfer paint application (spray guns) technology available on the market. They are:

- High volume low pressure (HVLP) spray guns,
- Airless spray guns,
- Air-assisted airless spray guns, and
- Electrostatic spray guns.

Each improved type of spray guns is further described below with associated benefits and limitations.

High Volume Low Pressure (HVLP) Spray Guns

The high volume, low pressure (HVLP) spray gun was introduced to the United States market in the mid-1980s. It is very similar to the conventional air atomizing gun. While the conventional gun atomizes the coating at pressures of 40 to 80 psi, HVLP guns use higher volumes of air at pressures less than 10 psi to perform the same function.

Several methods are available for generating the high volume, low pressure air. During the mid-1980s the most common method was using a high speed turbine that draws large volumes of air directly from the surrounding space. The turbine pushes this high volume of air through a large diameter hose to the spray gun, but the air pressure can range from as low as 0.5 to 10 psi. The key to atomizing the coating with this method is the high volume of air that mixes with the coating inside the gun. In addition, the turbine tends to heat the air to a temperature of approximately 110 °F, which appears to benefit the application of the coating.

More recently, spray gun vendors have introduced versions that do not require a turbine to generate the high volume air. Instead, they directly convert high pressure shop air to high volume, low pressure by means of venturies or regulators. Typically, the incoming shop air is at 80 to 100 psi, while the air emerging from the cap of the spray gun is less than 10 psi. The volume of air for this gun is considerably less than that emerging from the turbine gun.

Generally, HVLP guns have been successful in atomizing a wide range of coatings, although some rheologies (viscosity additives) do not atomize well. Although the turbine-operated HVLP guns are more expensive than the pressure-conversion HVLP guns, the turbine types are generally more efficient at atomizing a wider range of coatings; therefore, in some cases, they are the most cost-effective option.

Transfer efficiency trials have demonstrated that the HVLP guns are generally more efficient than other gun types, and in some instances even more efficient than electrostatic spray guns. Each operating scenario determines how efficient one gun type will be relative to the other types. One should not be misled by advertisements which claim that HVLP guns are always more efficient than other gun types. Only on-line testing can provide the answer.

Benefits of HVLP Spray Guns

- Higher transfer efficiency than traditional conventional air atomizing spray guns, which directly translates to reduced air emissions and waste generation.
- Can immediately replace conventional air atomizing spray guns without requiring any other major capital purchases.
- Operators can use the guns to apply coatings to small, medium, and large targets.

Notes

Limitations of HVLP Spray Guns

- HVLP spray guns require greater operator skill, therefore, additional training will be required.
- An optional heater may be required to properly heat the incoming air to atomize the paint (dependant on climate and specific gun design).

Airless Spray Guns

The airless spray system works much like a home water system. When turning on the faucet at home to take a shower, high pressure from the city's pumping station forces water through small orifices in the showerhead. Depending on the size of the orifices, the spray is either fine or coarse.

With an airless spray system, a hydraulic pump siphons the coating out of a reservoir such as a 55-gallon drum, and then pumps the coating, usually under pressures of 1,000 to 3,000 psi, to the spray gun. The coating atomizes as it passes through the small orifice (0.011 to 0.074 inches) in the cap of the gun. The size and shape of the orifice determine the degree of atomization and the shape and width of the fan pattern. Moreover, a large orifice permits a higher fluid flow rate than a small orifice.

Unlike the conventional air atomizing spray gun, the airless spray gun does not permit the operator the same flexibility in setting spraying parameters. Further, because of the high fluid pressure, operators can apply large quantities of the coating relatively quickly. For this reason, operators often use the airless spray gun to apply coatings to large surfaces such as buildings, the sides of vessels in petroleum refineries, structures such as bridges, etc. In addition, operators often use this gun in coating facilities where the coating application must keep up with fast moving conveyors.

EPA has traditionally associated this gun with transfer efficiency values of approximately 40 percent but considerably higher values are obtainable. For instance, airless spray guns that coat large surfaces, such as large electrical control panels, railcars, ships, buildings, etc., are usually associated with much higher transfer efficiency values. Alternately, operators usually do not use this gun to coat small targets because the high fluid pressure tends to deflect small targets suspended on conveyor lines, and the generally high fluid delivery rates make it difficult to achieve acceptable-looking finishes. When using an airless spray gun to coat small targets, therefore, the operator can expect low transfer efficiencies, sometimes even lower than those which a conventional spray gun could achieve.

Benefits of Airless Spray Guns

- Reduces air emissions and waste generation from overspray.
- Effective in coating large surface areas quickly.
- Transfer efficiencies of 40 percent and greater can be obtained.

Limitations of Airless Spray Guns

- Provides less operator flexibility in setting spraying parameters.
- Difficult to obtain a high quality finish on small parts due to the high fluid pressure.

Air-Assisted Airless Spray Guns

The principle of this spray gun is very similar to that of the airless gun in that high fluid pressures force the coating through a small orifice in the spray gun cap.

The gun differs from the airless spray gun in that the fluid pressures are only 300 to 1,000 psi. These pressures, however, poorly atomize the top and bottom of the fan. Moreover, streaks or "tails" appear at the -pressure air emerges from separate orifices in the horns of the cap to force the "tails" back into the main portion of the pattern. The low-pressure air, 10 to 20 psi, does not atomize the coating particles, and therefore the gun differs considerably from the conventional air atomizing spray gun. The air-assisted airless gun is currently among the most popular types used in a wide range of industries. While it can handle relatively high fluid flow rates and therefore keep up with fast moving conveyor lines, it can also be adjusted for slow moving lines. Operators commonly use this gun to coat

Notes

medium- and large-size targets, and in some cases to coat small parts, providing surprisingly appealing finishes.

EPA transfer efficiency table values which appear in various EPA documents, such as Control Technique Guidelines, New Source Performance Standards (NSPS), National Emission Standards for Hazardous Air Pollutants, are approximately 40 percent for the air-assisted airless spray gun.

Benefits of Air-Assisted Airless Spray Guns

- Reduces air emissions and waste generation from overspray.
- Effective in coating large surface areas quickly.
- Can be adjusted to coat small and medium sized parts with a quality finish.
- Transfer efficiencies of 40 percent and greater can be obtained.

Limitations of Air-Assisted Airless Spray Guns

- Poorly atomizes the top and bottom of the fan.

Electrostatic Spray Guns

This category of spray guns embraces a wide range of technologies; electrostatic guns can use conventional air, airless, air-assisted airless, and HVLP atomizing technologies. The paint operator has a wide range of spray gun designs from which to choose.

All of the electrostatic technologies have one thing in common: the gun imparts an electrostatic charge to the coating particles as they emerge from the spray gun nozzle. The operator must be sure to ground the target well so that the charged coating particles will be attracted to the grounded part and deposit themselves on the substrate.

Operators and others commonly believe that when applying a coating electrostatically, the coating wraps around the target to coat not only the facing surface, but also the reverse side of the target. Advertisements and vendors' literature reinforce this point. Unfortunately, this is a misconception. Some wrap of course takes place; the extent of the wrap, however, is often overstated. If coating round or square tubing electrostatically, the operator can expect almost total wrap around the entire tube because of the relatively small area that the coating must wrap. Alternately, when coating a medium or large flat target, the wrap only extends for approximately 1/8 to 1/4 inches around the reverse side. The wrap rapidly diminishes toward the center of the reverse surface.

Many parameters determine the efficiency with which the coating can wrap around the surface. These include:

- Polarity of the coating;
- Voltage potential of the spray gun;
- Air velocity in the spray booth; and
- Efficiency of the ground.

The operator cannot assume that the target is always well grounded even if it is attached to a ground strap or suspended from a conveyor hook. In fact, significant electrical resistance can exist between the target and the ground. Poor wrap leads to lower transfer efficiency. The mere fact that the spray pattern tends to bend toward the target when the paint particles follow the electrostatic field is already advantageous.

Benefits of Electrostatic Spray Guns

- Reduces air emissions and waste generation from overspray.
- Transfer efficiencies of 65 percent and higher are obtainable.
- Effective in coating edges.

Notes

Limitations of Electrostatic Spray Guns

- An electric hazard is introduced into the paint application process.
- Poor grounding can result in lower transfer efficiency rates.
- Application specifications and operating procedures are more stringent than other spray gun application technology.
- Extensive operator training is required.

Improved Spray Application Techniques

In addition to purchasing new spray application equipment, improving your facilities current spray techniques will also reduce waste volumes with little to no capital expense. The following list provides some suggested improved application techniques.

- Move Closer to the Part – A typical gun to target distance should be 8 to 12 inches. In general, as the distance increases, transfer efficiency diminishes.
- Reduce The Fluid Flow Rate – If the fluid pressure and corresponding fluid flow rate are high, the stream of paint emerging from the spray gun travels a relatively long distance before bending and falling to the ground. Such a flow rate has a very short residence time within the spray gun and requires a large amount of energy for proper atomization.
- Optimize The Fan Width – Properly adjust the fan width of the spray gun to match the size of the part; especially, when changing part size and geometry frequently to reduce overspray.
- Optimize The Painting Pattern (Gun-Stroke) – Reduce the size of the leading and trailing edges of the spray stroke while eliminating overlap in painting strokes.

Benefits of Improved Spray Application Techniques

- Reduced air emissions.
- Reduced wastes from clean-up operations.
- Lower raw material costs.
- Increased air filter life span.

Limitations of Improved Spray Application Techniques

There are no limitations associated with improving spray application techniques.

5.8.3.2 Recycling

There are no recycling options available for the paint application process due to the nature of the process.

5.9 Paint Removal

The following section provides a process description, waste description and a broad range of pollution prevention opportunities that can be implemented to improve paint removal operations.

5.9.1 Process Description

Paint stripping is a process stage common to paints and coatings operations. Although efficiently run operations attempt to minimize the need for paint stripping, the need can still arise for work pieces either because the applied coating is defective, the job specifications have changed, or the original coating has aged. Occasionally, process equipment (e.g., racks, vessels, booths, and grates) also must undergo paint stripping to remove the buildup of overspray.

The conventional approach to paint stripping involves the application of a chemical solvent. Traditional formulations are based on methylene chloride, which penetrates the coating causing it to swell and

Notes

separate from the substrate. This approach, however, generates organic vapors, which raise concerns about threats to worker health and about damage to the ozone layer of the atmosphere, as well as considerable sludge and wastewater laden with solvent.

Common methods for applying chemical paint strippers include immersion in dip tanks and spray, brush, or roller application. Other conventional paint stripping methods consist of propelling a dry media (sand, aluminum oxide) at the surface to remove the coating though impaction or abrasion. Although dry media, such as sand, is considered environmentally better than traditional chemical solvents, such as methylene chloride, a large solid waste stream is generated because the recyclability rate of the media is generally low, or none at all. In addition, airborne particulates are created from the blasting process that may or may not contain heavy metals (dependent on the media and type of coating being removed) which also raises worker health concerns.

5.9.2 Waste Description

The types of wastes generated from paint stripping depend on the method of removal being employed. Chemical paint strippers typically generate air emissions (VOCs or HAPs), spent stripping baths, sludge (containing both solvent and removed paint), and contaminated rinsewaters. While, dry media paint strippers typically only generate spent abrasives commingled with the removed coating and air emissions in the form of dust particulates). With dry media stripping techniques, the major concern is dust emissions and potential lead and chromium compounds in the stripped paint. The major concern with chemical stripping techniques is the methylene chloride and phenolic compounds used in cold strippers and the difficulty in handling and treating contaminated rinsewater.

In general, most paint stripping operations are proceeded by, and followed by a cleaning and degreasing stage to increase the efficiency of the paint stripper and prep the part for the next manufacturing or rework stage. Pre- and post-cleaning processes are covered in Section 5.5, Cleaning & Degreasing, and therefore are not discussed in this section.

5.9.3 Pollution Prevention Opportunities

Pollution prevention opportunities for paint removal operations are classified according to the waste management hierarchy in order of relevance; first, source reduction techniques, then secondly, (in-process) recycling options.

5.9.3.1 Source Reduction

The preferred method of pollution prevention is source reduction. In the case of paint removal operations the key to source reduction is; (1) eliminating the use of chemical paint strippers that contain hazardous substances, and (2) improving process efficiency through increased stripping rates with less media uses per square foot of surface area.

Over the past several years, industry and government have developed several alternative paint removal techniques in an effort to improve worker health and safety, eliminate the use of phenolic methylene chloride based chemical strippers, and reduce the environmental impacts associated with the operation. The advancements in paint removal techniques are grouped into the following five categories;

- "Environmentally friendly" chemical depainting (solvent and aqueous based),
- Dry media blasting,
- Wet media blasting,
- Thermal stripping, and
- Cryogenic stripping.

Each of the five paint removal technology areas are described below with associated benefits and limitations. The information contained below is not to be considered completely inclusive of all environmentally preferred paint removal methods, nor is its intent to be exhaustive of all considerations. Prior to implementing an environmentally friendly paint removal technology a thorough investigation of

Notes

process requirements (material compatibility) and an appropriate financial review (i.e., payback period, etc.) should be conducted.

"Environmentally Friendly" Chemical Depainting

Environmentally friendly chemical paint strippers are classified as solvent based and aqueous based. Both forms differ in chemical composition and offer different benefits and limitations for selected applications.

Solvent Based

Solvent-based paint stripping is conducted by immersing or spraying the work pieces with an organic solvent-based formulation. The solvent penetrates the coating and undermines its bond with the substrate, as indicated by wrinkling, bubbling, and blistering on the surface of the piece. The softened coating and solvent sludge are then wiped, scraped, or flushed away from the substrate. Often a work piece must undergo this process step several times before the coating is completely removed. After coating removal, the piece usually undergoes a water rinse.

In general, solvent is only sprayed on work pieces if they are too large for immersion or if they are assemblies with sophisticated components that could be damaged by extensive contact with the solvent. If only very specific areas of an assembly need to be reworked, then the solvent may be wiped or brushed onto the appropriate surfaces. Additionally, if only a small number of pieces need to be reworked, spraying might present a more cost-effective approach than installing an immersion stripping line.

Environmentally friendly nonchlorinated paint stripping products are based on such diverse chemicals as N-methyl pyrollidone, various glycol or glycol esters, and dimethyl sulfoxide. These are used in both immersion and spray-on application paint stripping operations. Although these solvents reduce concerns about hazardous air pollutants and minimize the generation of sludge with toxic constituents, nonhalogenated products tend to be considerably more expensive than traditional methylene chloride formulations. Additionally, immersion baths of nonhalogenated solvents must be heated (from 140° to 250°F) to speed up their performance capabilities, which adds to operational costs. Even when heated, however, nonhalogenated solvents have a somewhat selective chemical action and thus tend to be used in a narrower range of applications than methylene chloride solvents.

Additionally, solvent-based paint stripping methods generate sludge and wastewater that contain toxic chemicals. Disposal procedures required under the Resource Conservation and Recovery Act (RCRA) and record keeping requirements under Section 313 of Title III can increase the cost of managing such wastes. Three commercially available solutions can reduce the amount of hazardous waste sludge generated while increasing the amount of methylene chloride reclaimed from the decanting process. These are sludge dewatering presses, solvent distillation units, and/or dip tank filters. The following is a brief explanation of each type of alternative technology.

- *Sludge Dewatering Press*. This process involves putting the sludge in a belt or filter press and using the press filters to separate the paint chips, metal filings, etc. from the paint stripper. Removing excess paint stripper from the sludge reduces the over all volume of sludge and increases the amount of paint stripper which can be recycled.
- *Solvent Distillation Unit*. This process is aimed at recycling the paint stripper as an alternative to disposal when the immersion bath must be replaced in its entirety. Current practices are to dispose of the spent solution as hazardous waste. Distillation technology has been in use for many years in the solvent recovery industry. Industry experts estimate that only 60 to 80 percent of the original solution can generally be reclaimed. Following distillation of the alternative paint stripper additional additives may be needed to return the solution to its original performance specifications.
- *Dip Tank Filters*. This process would enable the user to continuously remove the sludge from the tank by feeding the used paint stripper through an in-line filter to separate the paint stripper from the paint stripping wastes.

Notes

Benefits of Solvent Based Paint Removers

- Minimizes hazardous waste disposal.
- Reduces HAP emissions from immersion tank paint stripping operations.
- Eliminates exposure to solvents.
- Meets environmental regulations regarding the use of ozone depleting substances (ODSs).

Limitations of Solvent Based Paint Removers

- Slower paint removal rates than methylene chloride.
- Increased cost for nonhalogenated solvents per gallon.
- Reduced lifespan of solvent.

Aqueous Based

Parts can be stripped of paint using aqueous based chemicals at elevated temperatures. These chemicals are biodegradable and can be discharged into the sewer system, virtually eliminating hazardous waste disposal costs. However, certain hazardous constituents in the paint may contaminate the solution. Local discharge regulations will need to be evaluated prior to discharging or disposing the contaminated solutions.

Unlike the traditional practices of using a cold tank in conjunction with chlorinated solvents, no chlorinated solvent waste streams are generated with a heated tank using aqueous/biodegradable cleaners. Effluent streams associated with the use of heated immersion tank aqueous strippers would be the aqueous solution and sludge products composed of paint, grease, oil, and dirt. The parts requiring stripping are immersed into the solution and then agitated to speed up the stripping process. In conjunction with optional equipment such as filtration systems and skimmers, the chemical solution may be recycled and used again.

Most of the aqueous strippers are alkaline in nature. These are different from acid strippers in that acid strippers may attack the metal parts, causing structural weakening (hydrogen embrittlement). In addition, acid strippers normally require a neutralization process after stripping.

Benefits of Aqueous Based Paint Removers

- Minimizes hazardous waste disposal.
- Eliminates exposure to hazardous solvents.
- Meets environmental regulations regarding the use of ozone depleting substances (ODSs).
- Spent wash solutions may be discharged into sewer systems if they meet the local discharge limits.

Limitations of Aqueous Based Paint Removers

- Not compatible with all metals.
- May require additional ventilation.
- May increase paint stripping time.

Dry Media Blasting

Dry media blasting options that have proven reductions in environmental impacts and economic feasibility are:

- Plastic media blasting,
- Wheat starch blasting, and
- Sponge jet blasting.

A brief description of each type of technology is provided below with associated benefits and limitations.

Notes

Plastic Media Blasting (PMB)

Plastic Media Blasting (PMB) is a dry abrasive blasting process designed to replace chemical paint stripping operations and conventional sand blasting. This process uses soft, angular plastic particles as the blasting medium.

PMB is performed in a ventilated enclosure such as a small cabinet (glove box), a walk-in booth, a large room, or airplane hanger. The PMB process blasts the plastic media at a much lower pressure (less than 40 psi) than conventional sand blasting. PMB is well suited for stripping paints, since the low pressure and relatively soft plastic medium have minimal effect on the surfaces beneath the paint.

Plastic media are manufactured in 6 types and a variety of sizes and hardness. The plastic blasting media types are:

- Type I Polyester (Thermoset),
- Type II Urea formaldehyde (Thermoset),
- Type III Melamine formaldehyde (Thermoset),
- Type IV Phenol formaldehyde (Thermoset),
- Type V Acrylic (Thermoplastic), and
- Type VI Polyallyl diglycol carbonate) (Thermoset).

PMB facilities typically use a single type of plastic media for all PMB work. For example, the majority of Department of Defense (Air Force, Army, Navy) PMB facilities use either Type II or Type V media. Type V media is not as hard as Type II media and is more gentle on substrates. Type V media is more commonly used on aircraft. Type II is better for steel surfaces.

After blasting, the media is passed through a reclamation system that consists of a cyclone centrifuge, a dual adjustable air wash, multiple vibrating classifier screen decks, and a magnetic separator. In addition, some manufacturers provide dense particle separators as a reclamation system. The denser particles, such as paint chips, are separated from the reusable blast media, and the reusable media is returned to the blast pot. Typically, media can be recycled ten to twelve times before it becomes too small to remove paint effectively. Waste material consists of blasting media and paint chips. The waste material may be classified as a RCRA hazardous waste because of the presence of heavy metals. An alternative solution to handling this hazardous waste is to locate a vendor that will "lease" blast media to an installation and then recycle the media to recapture the metals. This option eliminates media waste from the PMB facility waste stream.

Benefits of Plastic Media Blasting

- Media can be recycled for use approximately 10-12 times.
- Wastewater disposal costs (typical in chemical paint stripping operations) are virtually eliminated with PMB.
- Eliminates the production of waste solvents when compared to chemical paint stripping.

Limitations of Plastic Media Blasting

- Substantial capital equipment investment is required.
- Solid wastes may have to be disposed as a hazardous waste.
- Operator time, maintenance requirements, handling and disposal of waste varies with material to be stripped.
- Quality of stripping is dependent on skill and experience level of the operator.
- Military specifications do not allow PMB for depainting certain types of materials.
- May not remove corrosion.

Notes

Wheat Starch Blasting

Wheat starch blasting is a user-friendly blasting process wherein wheat starch can be used in systems designed for plastic media blasting (PMB), as well as systems specifically designed for wheat starch blasting. The wheat starch abrasive media is a crystallized form that is non-toxic, biodegradable, and made from renewable resources. The media is similar in appearance to plastic media, except that it is softer.

The wheat starch blasting process propels the media at less than a 35-psi nozzle pressure for most applications. The low pressure and relatively soft media have minimal effect on the surfaces beneath the paint. For this reason, wheat starch is well suited for stripping paints without risking damage to the substrate. Examples include removing paint from aluminum alloys and composites like graphite, fiberglass, and aramid (Kevlar™).

The wheat starch blasting process can remove a variety of coatings. Coating types range from resilient rain-erosion resistant coatings found on radomes and radar absorbing materials to the tough polyurethane and epoxy paint systems. The wheat starch system has been shown to be effective in removing bonding adhesive flash (leaving the metal to metal bond primer intact), vinyl coatings, and sealants. It has also been found effective in removing paint from cadmium parts, while leaving the cadmium plating intact.

There are several important components required for wheat starch systems. First, a moisture control system is needed to control the storage conditions of the medium. This is important when the system is shut down for extended periods of time. Second, to remove contaminants from the wheat starch media, the spent wheat starch residue is dissolved in water and then either filtered or separated in a dense particle separator/centrifuge. The wheat starch media is recycled in the system and may be used for up to 15 to 20 cycles. Low levels of dense particle contamination in the media may result in a rough surface finish on delicate substrates. The waste stream produced from this process is sludge generated from the wheat starch recycling system. This system produces approximately 85% less waste sludge compared to chemical stripping.

Benefits of Wheat Starch Blasting

- Wheat starch is a natural resource that is biodegradable.
- Waste can be treated in a bioreactor.
- Waste volume requiring disposal is estimated to be only five percent of the original volume.
- Can be used for removing coatings from both metallic and composite materials.
- Process is very controllable; it can be used to selectively remove from one to all coating layers.
- Does not cause fatigue to the substrate surface.
- Moderate stripping rates can be achieved while maintaining a gentle stripping action.
- Safe on soft-clad aluminum.
- Media is inexpensive and non-toxic.
- No size limitations on parts.

Limitations of Wheat Starch Blasting

- High capital investment cost.
- Requires complex subsystems for media recovery and recycling and dust collection and control.
- Operator training required.
- Low levels of dense particle contamination in the media may result in a rough surface finish on delicate substrates.
- Waste material may be hazardous and require disposal that may be costly.
- Typically slow to moderate stripping rate.

Notes

Sponge Jet Blasting

Sponge jet blasting is a form of abrasive blasting which uses grit-impregnated foam and foam without grit as the blasting media. The sponge blasting system incorporates these various grades of the water-based urethane-foam for use as a cleaning media to prepare the surfaces, and the abrasive media grades to remove surface contaminants, paints, protective coatings, and rust. In addition, the abrasive grades can be used to roughen concrete and metallic surfaces, if desired. The abrasive media contains a variety of grit, depending upon application, including aluminum oxide, steel, plastic, and garnet.

Sponge jet blasting equipment consists of two transportable modules, which include the feed unit and the classifier unit. The feed unit is pneumatically powered for propelling the foam media. The unit is portable and produced in several sizes (depending on capacity required). A hopper, mounted at the top of the unit, holds the foam media. The medium is fed into a metering chamber that mixes the foam with compressed air. By varying the feed unit air pressure and types of abrasive foam media used, sponge blasting can remove a range of coatings from soot on wallpaper to high-performance protective coatings on steel and concrete surfaces.

The classifier unit is used to remove large debris and powdery residues from the foam medium after each use. The used media is collected and placed into an electrically powered sifter. The vibrating sifter classifies the used medium with a stack of progressively finer screens. Coarse contaminants, such as paint flakes, rust particles, etc. are collected on the coarsest screens. The reusable foam media are collected on the corresponding screen size. The dust and finer particles fall through the sifter and are collected for disposal. After classifying, the reclaimed foam media can be reused immediately in the feed unit. The abrasive medium can be recycled approximately six times and the non-abrasive medium can be recycled approximately 12 times.

Benefits of Sponge Jet Blasting

- Safer for operators compared to other blasting media and chemical stripper systems.
- Easily transportable.
- Waste minimization is achieved by recycling the sponge media an average of six to twelve times.
- Absorbs and removes contaminants.
- Reduces dust generation.

Limitations of Sponge Jet Blasting

- Foam media costs are greater than sand blasting media.
- Reasonably large capital investment cost.

Wet Media Blasting

Proven pollution prevention wet media blasting technologies are divided into two categories:

- High pressure water jet blasting, and
- Sodium bicarbonate blasting.

A brief description of each type of technology is provided below with associated benefits and limitations.

High Pressure Water Jet Blasting

High-pressure water blast systems are used for removing paint with low-volume water streams at pressures ranging from 15,000 to 55,000 psi. High-pressure systems typically use pure water streams (deionized) and specialized nozzles to achieve effects ranging from a relatively gentle, layer-by-layer removal of organic paints to removal of metal flame spray coating and other tough, tightly adherent coatings. The process water, paint, and residue are collected by the effluent-recovery system for filtering the paint and residue, removing leached ions (copper, cadmium, lead, etc.), microparticulates, chlorides, sulfates, nitrates, and other contaminants. The water passes through a coalescing tank for removing oils and film, then through

Notes

a charcoal filter, microfilters and, finally, a deionization system to ensure that the water is Grade A deionized water. The recovered deionized water is recycled back into the process.

Benefits of High Pressure Water Jet Blasting

- Reduces hazardous waste by 90%.
- Selectively removes individual coating-layers.
- Pre-washing and masking is not needed in most applications.
- No size limitations for parts being stripped.
- Wastewater stream is compatible with conventional industrial wastewater plants.
- Reduces the process material costs significantly.
- Reduces labor hours for the stripping process by 50%.
- No dust or airborne contaminants generated.
- Requires no cleanup after stripping.

Limitations of High Pressure Water Jet Blasting

- High capital costs.
- Removes one layer at a time.
- May not remove corrosion.
- The substrates to be removed will impact personal protection and waste collection/disposal considerations.
- Coating debris sludge is a potential hazardous waste.

Sodium Bicarbonate Blasting

Sodium bicarbonate stripping processes are used as alternatives to traditional chemical paint stripping. Bicarbonate of soda (or sodium bicarbonate) is a soft blast media with a heavier specific gravity and less hardness than most plastic abrasives. The bicarbonate of soda stripping process can be used with or without water. It is most frequently used with water, which acts as a dust suppressant. In this form, compressed air delivers the sodium bicarbonate medium from a pressure pot to a nozzle, where the medium mixes with a stream of water. The soda/water mixture impacts the coated surface and removes old coatings from the substrate. The water used dissipates the heat generated by the abrasive process, reduces the amount of dust in the air, and assists in the paint removal by hydraulic action. Workers do not need to prewash or mask the surface of the material being stripped. Settling or filtration can separate the solid residue from the wastewater generated from this process.

The effectiveness of bicarbonate of soda stripping depends on optimizing a number of operating parameters, including nozzle pressure, standoff distance, angle of impingement, flow rate, water pressure, and traverse speed. In general, bicarbonate of soda stripping systems remove paint slower than most methods (other than chemical paint stripping) currently used. The type of equipment used in this stripping process may also have significantly different results.

Use of sodium bicarbonate in its dry form (or when not fully mixed with water) can create a cloud of dust that will require monitoring and may require containment to meet air standards and worker exposure limitations. The dust generated is not an explosive hazard, nor is sodium bicarbonate toxic in this form. However, the airborne particulates generated from the stripping operation can contain toxic elements from the paint being removed. This stripping process should be performed in areas where exhaust particulates can be contained and/or exhaust ventilation system controls are present to remove hazardous airborne metals. If bicarbonate of soda stripping is operated outdoors, air monitoring of dust (e.g. for metals) may be necessary to ensure that air standards are met. However, tests have shown that lead will adhere to the sodium

Notes

bicarbonate, thus reducing the risk. Be sure to have a local Industrial Health Specialist check the air for any resident metals.

The waste generated from bicarbonate of soda stripping systems in the wet form is wet slurry consisting of sodium bicarbonate medium, water, paint chips, and miscellaneous residues such as dirt and grease. Some installations are employing centrifuges to separate the water from the contaminated waste stream, thus reducing the amount of hazardous waste being disposed. Filtered wastewater containing dissolved sodium bicarbonate may be treated at an industrial wastewater treatment plant. In its dry form, waste generated includes nuisance dust, paint chips, and miscellaneous residues such as dust and grease. The solid waste may be suitable for disposal in a sanitary landfill. Analysis of wastewater and waste solids is required prior to disposal. Wastewater and bicarbonate residue disposal requirements will depend on the toxicity of the coatings and pigments to be removed. The sodium bicarbonate medium can not be recycled. The paint chip and miscellaneous residue wastes may be considered a hazardous waste.

Benefits of Sodium Bicarbonate Blasting

- Significant reduction in the amount of hazardous waste generated compared to chemical stripping.
- Reduces the number of hours required for paint stripping in comparison to chemical stripping.
- Selectively removes individual coating layers.
- Prewashing and masking is not required in most applications.
- No size limitations for parts being stripped.
- Wastewater stream may be centrifuged to reduce its volume or treated (if required) at industrial wastewater treatment plants available to many installations.
- Blast media is usually less expensive than PMB, wheat starch, and CO_2 pellets.

Limitations of Sodium Bicarbonate Blasting

- Requires subsequent washing of the item; thus, electrical components cannot be exposed to this stripping process.
- The sodium bicarbonate solution can not be recycled for stripping, although the water can be separated for disposal.
- May require monitoring.
- Containment may be required.

Thermal Stripping

Recent advancements in paint removal technologies has led to the following types of thermal stripping:

- Flashlamp, and
- Laser.

A brief description of each type of technology is provided below with associated benefits and limitations.

Flashlamp

Flashlamp systems consist of a tubular quartz flashlamp filled with xenon gas at low pressure. A light pulse is absorbed by the surface material, which may sublime, pylori or chemically dissociate. The residue left on the surface is a fine, black dust, which is then wiped off.

The xenon flashlamp, or the FLASHJET™ system, uses a carbon dioxide pellet stream to sweep away the coatings residue and cool and clean the surface. The system also includes effluent capture, process control and robotic manipulator subsystems. The primary coating removal mechanism for the process is the irradiation of the coated surface with high intensity light that breaks the molecular bonds within the paint film, reducing the surface coating to fine particles and gases. The fine particles are then removed by the low pressure carbon dioxide (dry ice) pellet blast.

Notes

The FLASHJET™ stripping system is currently utilized on the AH-64A Apache aircraft pre-mod program and AH-64D Longbow Apache aircraft modifications program. The stripping system is comprised of a 6-axis gantry robot system capable of stripping the Apache fuselage and various components parts including main/tail rotor blades, access doors, and other aluminum and Kevlar/epoxy parts. The most recent development for application of the process embraces the design integration of the FLASHJET™ system on a large mobile robotic manipulator capable of positioning the stripping head over all moldline surfaces of large transport aircraft.

Benefits of Flashlamp

- Reduced the labor required to strip an airframe from 200 to 20 man-hours.
- Can selectively remove one layer at a time without damaging the substrate.
- No hazardous waste generated.

Limitations of Flashlamp

- High capital cost (over 2 million).
- Poor stripping over complex geometry's.

Laser

Although laser paint strippers are being used in limited applications, laser stripping is still considered an emerging technology. All key technologies needed to build laser stripping systems are available and have been demonstrated. The systems in use are designed to control the laser and eliminate the need for precision robotics.

In general, laser paint stripping is a non-intrusive and low kinetic energy ablating process that requires a minimum of surface preparation and post process activities. Laser systems use short pulses of high peak power laser radiation to break the chemical bonds in the paint resin, which causes an instantaneous increase in the volume of the resin. The increase causes the inorganic solids to be blown away from the surface. The waste generated from laser stripping is the coating vaporized from the substrate.

Over the past 25 years, numerous industry and Department of Defense research and development efforts have investigated the use of lasers for removing paint coatings from aerospace components, including both metal and composite substrates.

For example, the Air Force has contracted with BDM Federal Inc., which has developed a high-energy CO_2 pulsed laser known as, the Laser Automated Decorating System (LADS), to remove rain erosion coatings from composite aircraft radomes and flight control surfaces. The principal objective of the project was to improve the quality of production that can be achieved compared to the chemical stripping process in removing the fluoroelastomer, rain erosion coatings from radomes. Chemical stripping required considerable scrapping and sanding, and then the radomes had to be passed to a subsequent process. Many radomes could not be cleaned to a usable level and were subsequently scrapped. During the first month of LADS operation seven radomes that had been scrapped were reclaimed.

The Army contracted with Silicon ALPS to procure an automated laser paint stripping (ALPS) cell. Corpus Christi Army Depot procured model LS4000, which uses a high-energy CO_2 pulsed laser with real-time vision feedback control to remove coatings from medium to large components, employing both robotic arm and rotational parts positioners. The system was procured specifically for stripping helicopter rotor blades.

Laser paint stripping is still in its infancy; however, the technology is proven to be easily adaptable to different paint systems and substrates. It is the only known efficient method of stripping that generates less disposable waste than the initial volume of paint applied.

Benefits of Laser Stripping

- Specific organic contaminants may be removed while minimizing damage to the substrate.

Notes

Limitations of Laser Stripping

- Characteristics of both the contaminant and substrate must be known so that the optimal absorption frequency can be used.
- The system is time and equipment intensive.

Cryogenic Stripping

Cryogenic paint stripping can be classified into the following two categories:

- Carbon dioxide pellet blasting, and
- Liquid nitrogen blasting.

A brief description of each type of technology is provided below with associated benefits and limitations.

Carbon Dioxide Pellet Blasting

Carbon dioxide (CO_2) blasting is an alternative process to chemical cleaning and paint stripping. The obvious advantage of CO_2 blasting over chemical stripping is the introduction of the inert CO_2 medium that dissipates.

CO_2 pellets are uniform in shape and the effectiveness of the pellets as a blast medium is similar to abrasive blasting media. However, the pellets do not affect the substrate; therefore, CO_2 pellet blasting is technically not an abrasive operation. This process can be used for cleaning, degreasing, some de-painting applications, surface preparation, and de-flashing (flashing is the excess material formed on the edges of molded parts).

The process starts with liquid CO_2 stored under pressure (~850 psig). The liquid CO_2 is fed to a pelletizer, which converts the liquid into solid CO_2 snow (dry ice flakes), and then compresses the dry ice flakes into pellets at about –110 °F. The pellets are metered into a compressed air stream and applied to a surface by manual or automated equipment with specially designed blasting nozzles. The CO_2 pellets are projected onto the target surface at high speed. As the dry ice pellets strike the surface, they induce an extreme difference in temperature (thermal shock) between the coating and the underlying substrate, weakening the chemical and physical bonds between the surface materials and the substrate. Immediately after impact, the pellets begin to vaporize, releasing CO_2 gas at a very high velocity along the surface to be cleaned. The high velocity is caused by the extreme density difference between the gas and solid phases. This kinetic energy dislodges the contaminants (coating systems, contaminants, flash, etc.), resulting in a clean surface. Variables that allow process optimization include the following: pellet density, mass flow, pellet velocity, and propellant stream temperature.

CO_2 pellet blasting is effective in removing some paints, sealants, carbon and corrosion deposits, grease, oil, and adhesives, as well as solder and flux from printed circuit board assemblies. Furthermore, since CO_2 pellet blasting is not an abrasive operation, it is excellent for components with tight tolerances. This process also provides excellent surface preparation prior to application of coatings or adhesive and is suitable for most metals and some composite materials. However, thin materials may be adversely affected. Blasting efficiency is approximately equal to that of other blasting operations and can approach 1 ft^2/minute after optimization. CO_2 blasting can be done at various velocities: subsonic, sonic, and even supersonic. Therefore, equipment noise levels are high (between 95 and 130 dB). This operation always requires hearing protection.

Waste cleanup and disposal are minimized because only the coating remains after blasting. There is no liquid waste because CO_2 pellets disintegrate. They pass from liquid to gaseous state, leaving no spent medium residue. With regard to toxic air control, small quantities of coating particles are emitted to the air. A standard air filtration system should be provided.

Benefits of Carbon Dioxide Pellet Blasting

- Significant reduction in the amount of hazardous waste and hazardous air emissions generated compared to chemical stripping.
- Time required for cleaning/stripping processes is reduced by 80-90%.

Notes

- Leaves no residue on the component surface.
- Effective in precision cleaning.
- Introduces no new contaminants.

Limitations of Carbon Dioxide Pellet Blasting

- CO_2 blasting is not always a one-pass operation; an effective blasting operation usually requires multiple passes to achieve the desired effect.
- Can have high capital costs.
- Fixed position blasting operation can damage the component's surface.
- Generates solid waste containing coating chips that are potentially hazardous; medium does not add to the volume of solid waste.
- Rebounding pellets may carry coating debris and contaminate workers and work area.
- Some coating debris may redeposit on substrate.
- Nonautomated system fatigues workers quickly because of cold temperature, weight, and thrust of the blast nozzle.

Liquid Nitrogen Blasting

Liquid nitrogen cryogenic blasting is a variation of the PMB method that involves chilling the work piece to embrittle the coating before subjecting it to impaction with a plastic media. The piece is sprayed with liquid nitrogen as it rotates on a spindle within a cabinet, and then is blasted with the impaction media, which are projected into the cabinet by throw wheels.

After chilling the coating to about –320 °F, the liquid nitrogen warms to ambient temperatures and evaporates into a gaseous form. This harmless gas can be vented to the atmosphere, leaving the medium to be collected, separated from coating debris, and recycled.

The liquid nitrogen cryogenic blasting approach is used primarily to remove coating build-up from certain types of process equipment used in paints and coatings operations (e.g., paint hangers, coating racks, floor gratings). Operations in the automotive and appliance industries have used this method with success.

Benefits of Liquid Nitrogen Blasting

- Minimizes pollution generation. Avoids generation of wastewater and VOCs; because the process is dry, no water is used.
- Recyclability. If the correct plastic medium is selected, they can be recycled numerous times.
- High throughput. Can be effective at a relatively high coating removal rate.
- Low operating costs. Compressed air and electricity requirements are low.

Limitations of Liquid Nitrogen Blasting

- Capital and startup costs can be high.
- Not appropriate for thin coatings and less effective on epoxies and urethanes.
- The stripping cabinet restricts the size of parts that can be processed.

5.9.3.2 Recycling

In-process recycling is another method of reducing the environmental impacts from paint removal operations. In relation to paint removal operations, recycling generally consists of removing the paint coating particles from either the solvent or blast media through filtration, distillation, or gravity separation to extend the useful life of the solvent or media. For chemical or petroleum hydrocarbon based paint removers, in-process distillation can be used to extend the bath life of a dip tank indefinitely if conducted properly (selective additives may be necessary to add to the original solution to maintain all performance

Notes

characteristics). A complete process description for the distillation of petroleum hydrocarbon based solvents is provided in Section 5.5, Cleaning & Degreasing.

The required technique for in-process recycling of blast media is dependent on the media type (sponge, PMB, water, etc.). Recycling methods for each type of alternative blast media described under the source reduction options is contained with in the process description and operating requirements of each.

5.10 Printing

The following section provides a process description, waste description and a broad range of pollution prevention opportunities that can be implemented to improve commercial printing operations.

5.10.1 Process Description

The printing industry consists of establishments engaged in printing by lithography, gravure, flexography, letterpress, and screen printing. Presses are also categorized by the forms of paper or other substances used. Web presses, which are used for larger printing runs, print the image onto a continuous roll (web) of paper. After printing, the paper is slit (cut) and trimmed to the preferred size. Sheet-fed presses print on individual sheets of paper or the substrate. The following provides a brief overview of each type of printing process.

- *Letterpress* - is the oldest and the most versatile of the printing methods. Printing, accomplished with a relief method, utilizes cast metal types or plates on which the image or printing areas are raised above the nonprinting areas. Ink rollers touch only the top surface of the raised areas. The nonprinting areas are lower and do not receive ink. Printing is done on sheets of paper on sheet-fed presses or rolls of paper on web-fed presses. Sheet-fed presses are used for general printing, books, catalogues, and packaging. Web-presses are used for news papers and magazines.

- *Flexography* - is a form of rotary web letterpress that uses flexible runner plates and fast drying solvent or water-based inks. The rubber plates are mounted to the printing cylinder. Products printed by the flexographic process range from decorated toilet tissue to polyethylene and other plastic films.

- *Gravure* - is a type of intaglio printing that uses a depressed (or sunken) surface for the image. The image area consists of cells or wells etched into a copper cylinder or wraparound plate. The printing area is the cylinder or plate surface. The plate cylinder is rotated in an ink bath, and the excess ink is wiped off the surface by a flexible steel "doctor blade." The remaining ink in the thousands of sunken cells form the images as the paper passes between the plate cylinder and the impression cylinder. Gravure presses are manufactured to print sheets of paper (sheet fed gravure) or rolls of paper (web-fed gravure); however, the web-fed gravure is more popular.

- *Lithography* - is the most common printing process, and a printing method known as planographic. The image and the nonprinting areas are on the same plane as a thin metal plate, and the areas are distinguished by chemicals. Lithography is based on the principal that grease and water do not mix. The ink is offset first from the plate to a rubber blanket and then from the blanket to the paper. The printing areas in the plate are made ink receptive and water repellent, and the nonprinting areas are made ink repellent and water receptive. The plate is mounted on the plate cylinder, which rotates and comes in contact with rollers that are wet by a dampening solution (or water) and rollers that are wet by ink in succession. The ink wets the image areas, which are then transferred to the intermediate blanket cylinder. The image is printed to the paper as the paper passes the blanket cylinder and the impression cylinder. The major advantage of transferring the image from the plate to a blanket before transferring to the paper (offsetting) is that the soft rubber surface of the blanket creates a clearer impression on a wide variety of paper surfaces and other substrate materials. The process of lithography is applied to individual sheets, known as sheet-fed lithography, and onto a continuous roll (web) of paper, known as web-offset lithography. Sheet-fed lithography is used for printing books, posters, greeting cards, labels, packaging, advertising flyers and brochures, periodicals, and reproducing artwork. Web-offset lithography is used for periodicals, newspapers, advertising, books, catalogues, and business forms.

Notes

- *Screen Printing* - employs a porous screen of fine silk, nylon, or stainless steel mounted on a frame. Printing is done on the paper by applying ink to the screen, then spreading and forcing ink through the fine openings with a rubber squeegee. Versatility is the major advantage of screen printing since any surface (e.g., wood, glass, metal, plastic, fabric. etc.) can be printed.

The principle raw materials used by the commercial printing industry are inks and substrates. A substrate is any material upon which ink is impressed, such as paper, plastic, wood, or metal.

Other raw materials used by the industry include gravure cylinders, photographic films, photoprocessing chemicals developers, fixers, wash baths, reducers, intensifiers, printing plates, plate processing chemicals, fountain solutions, cleaning solvents, and rags. Exhibit 5.12 illustrates a typical commercial offset lithographic printing operation. Printing begins with the preparation of artwork or copy, which is photographed to produce an image. A proof is made which will be used to compare with the printed product and make adjustments to the press. The photographic image is transferred to a plate. In the platemaking step, the image areas of the plate are made receptive to the ink. In the printing step, ink is applied to the plate, then transferred to rubber blanket and then to the substrate.

The substrate accepts the ink, reproducing the image. The substrate is then cut, folded, and bound to produce the final product. Printing can be divided into six separate steps: (1) image processing, (2) proofing, (3) platemaking, (4) makeready, (5) printing, (6) finishing. The operations involved in these steps are summarized below.

5.10.1.1 Image Processing

Most printing operations begin with art and copy (or text) preparation. Once the material is properly arranged, it is photographed to produce transparencies. If an image is to be printed as a full color reproduction, then color separations are made to provide a single-color image or record which can then be used to produce this single –color printing plate for lithography or the cylinder for gravure. Once the film has been developed, checked, and re-photographed (if necessary), it is sent on to the plate- or cylinder-making operation.

The printing industry employs graphic arts photography in the reproduction of both artwork and copy, using materials similar to those in other fields of photography. The materials include a paper, plastic film, or glass base cover with a light-sensitive coating called a photographic emulsion. This emulsion is usually composed of silver halide salts in gelatin. Silver halides include silver chloride, silver bromide and silver iodide.

Some processes such as letterpress or lithography use a photographic negative to transfer an image to the plate. Gravure, screen printing, and other lithographic processes require positives. These are produced by printing negatives onto paper or film. The resulting images have tone values similar to the object or copy that was photographed.

5.10.1.2 Proof

A proof is produced after the image processing step as part of internal job control, and it may also serve as a communication tool between printer and client. It is used for both single-color and multi-color printing.

5.10.1.3 Plate Processing

The type of printing process depends on the intermediate image carrier, a plate or cylinder that accepts ink off a roller and transfers the image to a rubber blanket. The blanket, in turn, transfers it to the paper. The type of ink and press used, number of impressions that can be printed, the speed with which they are printed, and the characteristics of the image are all determined by the type of image carrier.

The four different types of image carriers generally used are manual, mechanical, electrostatic, and photomechanical.

Notes

Exhibit 5.12: Process Flow Diagram for a Typical Commercial Printing Operation

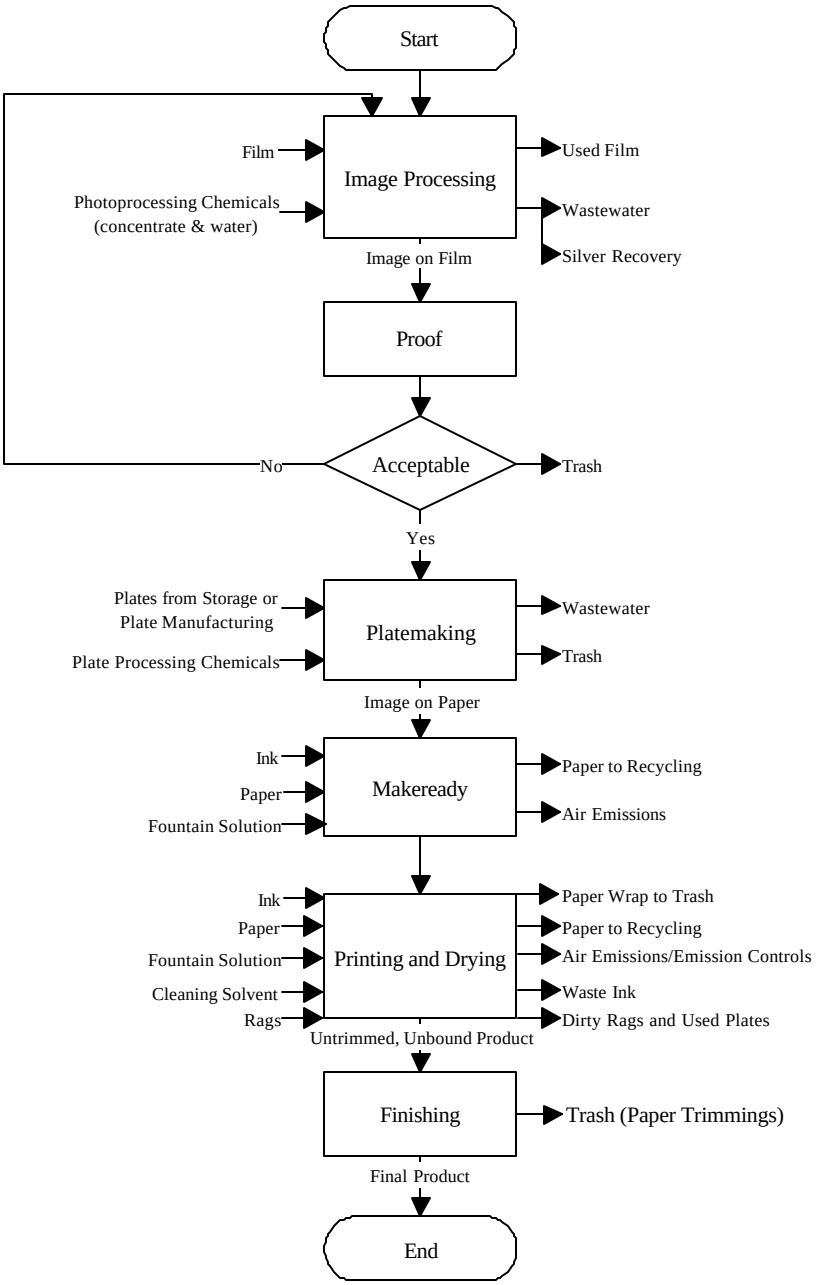

- *Manual Image Carriers* – consist of hand-set composition, wood cuts, linoleum blocks, copperplate or steel-die engravings. Manually made images are seldom used now except for commercial use in screen printing.
- *Mechanical Image Carriers* – are produced mainly for relief printing. There are two categories: (1) hot metal machine composition and (2) duplicate printing plates. Intaglio printing also uses mechanically made plates. These include pantograph engravings, used for steel-die engraving, and engraving made with geometric lathes, which produce scrolls for stock and bond certificates and paper currency. Mechanically made gravure cylinders are also used for printing textiles, wrapping papers, wallpapers, and plastics.

Notes

- *Electrostatic Plates* – are popular in reprography (offset duplicating) where electroplating cameras convert original images or paste-ups to lithographic plates used on copier/duplicators. Electrostatically produced plates are also used for imaging from paste-ups and for laser platemaking used in newspaper printing.
- *Photomechanical Platemaking* – is the common method of plate making. These image carriers use light sensitive coatings on which images are produces photographically. Photomechanics is capable of reproducing photographs and other pictorial subjects. This overcomes the limitations of manually and mechanically produced plates.

5.10.1.4 Makeready

Makeready is the procedure in which all the adjustments are made on the press, including proper registration and ink density, to achieve a reproduction equivalent to or comparable to the proof of acceptable quality to the pressman or customer's representative. This step may be the major source of waste from the printer's point of view. Makeready times can last from a few minutes to many hours. Makeready can be conducted at low speeds or at press production speeds. The printer's objective is to minimize both the time involved in makeready and the number of waste sheets or signatures coming off the press.

5.10.1.5 Printing

Once the plates are prepared, the actual printing can begin. The printing operations are generally the same for each of the major processes, with the exception of screen printing. The two common types of presses can print up to 3 impressions per second. Web presses typically print at a rate of 1,000 to 1,600 feet per minute.

Preparation for printing begins by attaching the plate to the plate cylinder of the press. Virtually all presses print from a plate cylinder, as opposed to a flat plate. Each unit of printing press prints a single color. To print a full color illustration, four separate units are typically required, one unit each for magenta, cyan, yellow, and black.

After printing, the substrate may pass through a drying operation depending on the type of ink used. For example, lithography can use heat-set and non-heat-set inks. In heat-set lithography, the substrate is passed through a tunnel or float dryer which utilizes hot air or direct flame or combination. With non-heat-set lithography, the ink normally dries by absorption. Where as gravure printing utilizes inks that dry by solvent evaporation.

5.10.1.6 Finishing

The term "finishing" refers to final trimming, folding, collating, binding, laminating, and/or embossing operations. A variety of binding methods are used for books, periodicals, and pamphlets. These include stitching (stapling), gluing, and mechanical binding. These finishing operations are frequently accomplished by an outside service organization.

5.10.2 Waste Description

The principal wastes associated with commercial printing operations are off-spec paper (printed and unprinted), spent printing solutions, cleaning solvents, air emissions (from printing operations) and miscellaneous secondary wastes.

By volume, paper is the largest waste stream associated with the printing industry; almost 98% of the total waste generated is spoiled paper and paper wrap. Waste paper comes from rejected print runs, scraps from the starts and ends of runs, and overruns (excess number of copies made to ensure that there are enough acceptable copies). Most paper is recycled, incinerated, or disposed of as solid waste (trash).

Spent photoprocessing chemicals are generally biodegradable with high BOD (biochemical oxygen demand), therefore, it is generally necessary to treat the waste before discharging to sanitary sewers. For larger printing companies, it may be economical and necessary to recover silver from the spent solution.

Exhibit 5.13 summarizes the process origin and composition of each waste stream. In addition, the wastes generated from each step of the printing process are also included.

Notes

By volume, paper is the largest waste stream associated with the printing industry; almost 98% of the total waste generated is spoiled paper and paper wrap. Waste paper comes from rejected print runs, scraps from the starts and ends of runs, and overruns (excess number of copies made to ensure that there are enough acceptable copies). Most paper is recycled, incinerated, or disposed of as solid waste (trash).

Spent photoprocessing chemicals are generally biodegradable with high BOD (biochemical oxygen demand), therefore, it is generally necessary to treat the waste before discharging to sanitary sewers. For larger printing companies, it may be economical and necessary to recover silver from the spent solution.

Exhibit 5.13: Wastes from Printing

Waste Description	Process Origin	Composition
Paper	Makeready Printing	Inked and clean sheets. Inked sheets.
Printing Solutions	Image Processing Platemaking	Photographic chemicals, silver (if not recovered). Acids, alkali, solvents, plate coatings (may contain dyes, photopolymers, binders, resins, pigments, organic acids), developers (may contain isopropanol, gum arabic, lacquers, caustics), and rinse water.
Cleaning Solvents	Printing & Proof	Lubricating oils, waste ink, cleanup solvents (halogenated and non-halogenated), and rags.
Air Emissions	Makeready & Printing	Solvent from heat-set inks, isopropyl alcohol (fountain solution), and cleaning solution.
Miscellaneous	Image Processing & Proofing Platemaking	Empty containers, packages, used film, and outdated materials. Damaged plates, developed film, and outdated materials.

Platemaking wastes (e.g., acids and bases used to clean or develop the plates) must be either sent to a wastewater treatment facility or drummed for disposal. Platemaking wastes are minimal for those facilities that use presensitized plates. Fountain solutions used in lithography contain gum arabic, phosphoric acid, defoamers, and fungicides. Isopropyl alcohol (IPA) is usually added to reduce the surface tension of the solution, making it adhere better to the nonimage areas of the plate cylinder. Most of the IPA evaporates with water and the other chemicals remaining on the paper. Some chemical manufactures offer low volatility fountain solutions that do not use IPA or other volatile compounds. Equipment-cleaning wastes include spent lubricants, waste inks, cleanup solvents, and rags. Waste ink is the ink removed form the ink fountain at the end of a run, or contaminated ink. Although most of the ink used by a printing company ends up on the paper (or other substrate), other ink losses include spills and ink printed on waste paper. Most waste inks are either incinerated (if considered hazardous) or discarded as solid waste.

Cleanup solvents are used to clean the press. The rubber blankets are cleaned once or twice per 8-hour shift to minimize the imperfections resulting from dirt or dried inks. When lower quality paper is used, cleaning is required more frequently. The cleaning solvents include methanol, toluene, naphtha, trichloroethane, methylene chloride, and specially formulated blanket washes.

Inks may contain solvents (e.g., xylene, ketones, alcoholc, etc.), depending on the type of printing process and substrate. For example, gravure printing inks contain solvents. The inks used for offset lithography are explained below.

- Sheet-fed inks that dry by oxidative polymerization.

Notes

- Heat-set inks that dry by evaporation of aliphatic ink oils.
- Non-heat-set web inks that dry by absorption of the ink on the substrate.

No significant amount of VOCs (volatile organic compounds) are emitted from sheet-fed inks or non-heat-set web inks. For heat-set inks, the printed web passes through a dryer where ink oils are evaporated. The resulting VOC emissions can be controlled by catalytic or thermal incineration, or by condenser systems. For VOC emissions from gravure printing, carbon absorption is the most commonly applied control method.

Commercial printing operations also generate secondary wastes, such as, packaging material, damaged plates, paper wrapping, etc. This waste stream is classified as miscellaneous wastes due to its broad nature.

5.10.3 Pollution Prevention Opportunities

Pollution prevention opportunities for printing operations are classified according to the waste management hierarchy in order of relevance; first, source reduction techniques, then secondly, (in-process) recycling options.

5.10.3.1 Source Reduction

Source reduction efforts are centralized around process modifications for the printing industry. Identified opportunities are grouped according to the four main processing steps; image processing, plate processing, makeready, and printing/finishing. The following describes the benefits and limitations of potential source reduction opportunities for each step.

Image Processing

The major waste stream associated with image processing is wastewater, which contains photographic chemicals and silver removed from film. The use of computerized electronic prepress systems for typesetting and copy preparation is a recent advance in image-processing steps. The electronic scanner scans the image fed by text, photos, and graphics, and the copy is edited on a computer display monitor rather than paper. This reduces the number of films and the amount of developing chemicals and paper used.

The wastes from photoprocessing that use silver films may be considered hazardous, depending on the silver concentration. Photographic materials that do not contain silver are available, but they are slower to develop than silver halide films. Diazo and vesicular films have been used for many years. Vesicular films have a honeycomb-like cross section and are coated with a thermoplastic resin and light sensitive diazonium salt. Recently, photopolymer and electrostatic films have been used. Photopolymer films contain carbon black as a substitute for silver, and the films are processed in a weak basic solution that needs to be neutralized before disposal. Electrostatic films are nonsilver films that can be developed at a speed comparable to that of silver films. An electrostatic charge makes the film light sensitive, and a liquid toner brings out the image after the film is exposed to light. Electrostatic films also have high resolution.

Extending the life of fixing baths can reduce waste from photographic processing. Techniques for extending bath life are explained below.

- Addition of ammonium thiosulfate, which increases the maximum allowable concentration of silver in the bath.
- Use of an acid stop bath prior to fixing bath.
- Addition of acetic acid to keep the pH low.

Close monitoring of the process bath and optimizing the bath conditions will minimize the use of bath chemicals.

Squeegees can be used to wipe excess liquid from the film and paper in a nonautomated processing system. This can reduce the chemical carryover from one process bath to the next by as much as 50 percent. Minimizing chemical contamination of the process baths increases recyclability and bath life, and reduces the

Notes

amount of replenisher chemical required. However, squeegees must be used only after the film image has hardened, because they can damage the image if it has not fully hardened.

During photographic processing, films are commonly washed with water, using parallel tanks systems to remove hypo from the emulsion. In a parallel system, fresh water enters each wash tank and effluent leaves each wash tank. Employing a countercurrent washing system can increase the removal efficiency of hypo.

Benefits of Image Processing Changes

- Computerized prepress systems for typesetting and copy preparation reduce the number of films and the amount of developing chemicals and paper used.
- Nonhazardous films may be utilized instead of hazardous silver halide films.
- Electrostatic films are nonsilver films that can be developed at a speed comparable to that of silver films.
- Squeegees used to wipe excess liquid from film and paper can reduce chemical carry over by 50%, therefore increasing recyclability and bath life, and reducing the amount of replenisher chemicals required.

Limitations of Image Processing Changes

- High initial costs may prohibit smaller printing operations from using computerized prepress systems.
- Nonsilver films are typically slower to develop than the silver halide films.
- Squeegees can damage film if the image has not fully hardened.

Plate Processing

Recent advances in plate-processing techniques have reduced the quantity and/or toxicity of hazardous wastes and improved worker safety. In gravure printing, metal etching and metal plating operations involve chemical compounds that are generally considered hazardous. Waste solutions from metal etching or metal plating usually require treatment before discharge to a municipal sewer. The same is true for all wastewater used in plate rinsing operations. The use of multiple countercurrent rinse tanks can reduce the amount of wastewater generated. Minimizing drag-out from the plating tanks can reduce the toxicity of wastewater from plating. Drag-out can be reduced by the following process changes.

- Installing a drainage rack.
- Using draining boards to collect the drag-out and returning it to the plating tank.
- Raising the plate tank temperature to reduce the viscosity and surface tension of the solution.

The printer should consider replacing metal etching or plating processes with presensitized lithographic plates, plastic or photopolymer plates, or hot metal plates, which do not generate hazardous wastes. The wastes generated by presensitized lithographic plates are wastewater from developing and finishing baths and used plates. Consumption of chemicals can be reduced by frequently monitoring the bath pH, temperature, and solution strength, thereby extending the bath life. Automatic plate processors may also be used since they are designed to maintain the optimum bath conditions.

Nonhazardous developers and finishers are also available. For example, some developers and finishers have a flash point of 213 °F and are therefore considered nonflammable. Presensitized plates that are processed only with water are also available.

Benefits of Plate Processing Changes

- Nonhazardous and nonflammable developers and finishers can replace hazardous and flammable developers and finishers.

Notes

- Countercurrent rinse tanks can decrease the amount of wastewater generated, and increase efficiency.
- Presensitized lithographic plates, plastic plates, or hot metal plates can replace hazardous waste generating metal etching or plating processes.

Limitations of Plate Processing Changes

- Countercurrent rinse systems require a large amount of floor space and a high initial equipment cost.
- Modifying the type of plates used can be expensive.

Makeready

Paper is the largest raw material item and is the most expensive component of the printing operation. The printed paper produced in a makeready is frequently the largest waste a printer generates, but it is nonhazardous. The amount of paper waste is determined by the efficiency of the press adjustments needed to achieve the desired print quality (e.g., proper ink density and accurate registration).

With proper use, automated press adjustment devices can speed up the makeready step and save paper and ink. Examples of these devices are automated plate benders, automated plate scanners, automatic ink density setting systems, computerized registration and ink/water ratio sensors. It is important, however, that the cost of these items be considered against the degree of quality improvement and the extent of waste reduction.

Benefits of Makeready Changes

- Automated equipment can speed up the makeready stage.
- Ink and paper cost savings may be realized with efficient adjustments.

Limitations of Makeready Changes

- Improvements in quality and waste reduction may not warrant cost of technology.
- The capital costs of automated equipment are high.

Printing and Finishing

The major waste associated with printing and finishing are scrap paper, waste ink, and cleaning solvents. The solvent waste stream consists of waste ink, ink solvents, lubricating oil, and cleaning solvents. Wastes generated by the printing and finishing operations can be reduced by the following equipment and techniques.

- *Adopting a standard ink sequence* - can reduce the amount of waste ink and waste cleaning solvents. If a standard ink sequence is employed, ink rotation is not changed with a job and it is not necessary to clean out fountains in order to change ink rotation.
- *A web break detector* - can note tears in the web. If tears are not detected, the broken web begins to wrap around the rollers and force them out of the bearing. Although web break detectors are primarily used to avoid severe damage to the presses, they also reduce paper and ink wastes by preventing press damage.
- *An automatic ink level controller* - can be used to maintain the desired ink level in the fountain and to optimize process conditions.
- *Water-based inks* - may be used in place of inks that contain oils. Applications for water-based inks are flexographic printing on paper and gravure. Although water-based ink reduces emissions that result from evaporation of ink oils, it is more difficult to dry and makes equipment cleaning more difficult.
- *UV inks* - consist of one or more monomers and a photosynthesizer that selectively absorbs energy. UV inks do not contain solvents, and the inks are not "cured" until they are exposed to UV light. Therefore, UV inks can remain in the ink fountains (and plates) for longer periods of time, reducing cleanup frequency. UV inks are particularly recommended for letterpress and lithography.

Notes

Although UV inks reduce the amount of waste generated, they cost 75 to 100 percent more than conventional heat-set inks and some of the chemicals in these inks are toxic. In addition, conventional commercial paper recycling procedures cannot de-ink papers printed by UV inks.

- *Automatic blanket cleaners* - can also be used to increase efficiency, thereby reducing the amount of waste generated. An automatic blanket cleaner consists of a controller box, a solvent metering box for each processing unit, and a cloth handling unit. Less toxic and less flammable blanket washers are now available, replacing cleaning solvents that contain benzene, carbon tetrachloride, and trichlorethylene. However, these new blanket washers have a lower cleaning efficiency.
- *Reduce the amount of cleaning solvents* - by cleaning ink fountains only when different color ink is used or when the ink may dry out between runs. Aerosol sprays are available to spray onto the ink fountains to prevent overnight drying and to eliminate the need for cleaning the fountains at the end of the day. This reduces the amount of waste ink generated and the amount of cleaning solvents used.
- *Alternative printing technologies* - such as electrostatic screen printing, also know as pressure-less printing should be considered. In electrostatic screen printing, a thin flexible printing element with a finely screened opening is used to define the image to be printed. An electric field is established between the image element and the surface to be printed. Finely divided "electroscopic" ink particles, metered through the image openings, are attracted to the printing surface and held by electrostatic force until they are fixed by heat or chemicals.

Benefits of Printing and Finishing Changes

- UV inks reduce the amount of waste generated.
- Web break detectors reduce paper and ink wastes, and prevent press damage.
- Water-based inks reduce emissions that result from evaporation of ink oils.

Limitations of Printing and Finishing Changes

- UV inks cost 75 to 100% more than conventional inks.
- UV inks contain toxic chemicals.
- Conventional commercial paper recycling procedures cannot de-ink papers printed by UV inks.
- Water-based inks are more difficult to dry and make equipment harder to clean.
- Less toxic and less flammable blanket washers are generally less efficient.

5.10.3.2 Recycling

Many of the materials essential to the commercial printing industry can be recycled or reused. Fortunately, this recycling has both economic and environmental benefits. The main recyclable materials and their common method of recycling are listed below.

Waste Inks

The main recycling technique for waste inks relies on the blending of different colors together to make black ink. Small amounts of certain colors or black toner may be needed to obtain an acceptable black color. Recycling to get black ink is generally more practical than recycling to get the original color. This reformulated black ink is comparable to some lower quality new black inks, such as newspaper ink. For this reason, much of the black ink for newspaper printing contains recycled ink.

Labor time necessary to fill, operate, and empty the ink recycler is about the same as the labor required to pack waste ink into drums and to manifest it. Therefore, the labor savings is not significant. The major operating cost savings are reductions in raw materials costs and waste disposal costs.

Benefits of Waste Ink Recycling

- Raw material and waste disposal costs decrease.

Notes

- Labor time to operate ink recycler is about equal to the time required to pack waste ink for disposal.
- Most waste ink can be recycled.
- Reduces the mass of waste ink entering the waste stream.

Limitations of Waste Ink Recycling

- Recycling to get colored ink is unpractical.
- Reformulated ink is lower quality, mainly usable only for newspaper printing.

Empty Containers

Most ink containers are scraped once empty and discarded as solid waste. Since the degree of cleanliness is a function of operator effort, the amount of ink discarded can vary widely. By purchasing ink in recyclable bulk containers, the container can be returned to the ink supplier for refilling instead of being thrown away. Additionally, the use of bulk containers cuts down on the amount of cleaning required since the surface area of the container per unit volume of ink stored is reduced.

Benefits of Empty Container Recycling

- Bulk containers require less cleaning time per volume of ink.
- Disposal costs are reduced.
- Amount of containers entering the waste stream is reduced.

Limitations of Empty Container Recycling

- Higher costs may be encountered for reusable versus disposable containers.

Waste Paper

Paper is the largest supply item a printer buys and it may be the most expensive component of his work, therefore, paper use and the disposition of waste paper are critical concerns. Many printers segregate and recycle paper according to grade: unprinted white paper is sent separately to recycling; inked paper is one grade and is recycled separately; and wrappers for paper, which are a lower grade, are also recycled separately.

Benefits of Waste Paper Recycling

- Reduces mass of paper entering the waste stream.
- Reduces raw material costs.

Limitations of Waste Paper Recycling

- It is not economical to recycle lower grade paper.
- Separating the paper by grade requires extra time.

Lube Oils

When the printing presses are lubricated with oil, the used oil should be collected and turned over to a recycler. The recycler can re-refine the oil into new lubricating oil, create fuel grade oil, or use it for blending into asphalt.

Benefits of Lube Oil Recycling

- Saves potentially hazardous materials from land disposal.
- Reduces disposal costs.

Limitations of Lube Oil Recycling

- The lubricating oils can be difficult to recover.

Notes

Silver and Other Photoprocessing Chemicals

Basically, photoprocessing chemicals consist of developer, fixer, and rinse water. Keeping the individual process baths as uncontaminated as possible is a prerequisite to the successful recycling of these chemicals. Silver is a component in most photographic films and paper and is present in the wastewater produced. Various economical methods of recovering silver are available (e.g. metallic replacement, chemical precipitation, electrolytic recovery), and a number of companies market equipment that will suit the needs of even the smallest printing shop.

A common method of silver recovery is electrolytic deposition. In an electrolytic recovery unit, a low voltage direct current is created between a carbon anode and a stainless steel cathode. Metallic silver plates onto the cathode. Once the silver is removed, the fixing bath may be able to be reused in the photographic development process by mixing the de-silvered solution with fresh solution. Recovered silver is worth about 80% of its commodity price.

Another method of silver recovery is metallic replacement. The spent fixing bath is pumped into a cartridge containing steel wool. An oxidation-reduction reaction occurs and the iron in the wool replaces the silver in the solution. The silver settles to the bottom of the cartridge as sludge.

To recycle used film, it may be worthwhile to sort the film into “largely black” versus “lar segments, since the rate of payment for mostly black film may be twice that for mostly clear.

Technologies for reuse of developer and fixer are available and include ozone oxidation, electrolysis, and ion exchange.

Benefits of Silver Recycling

- Equipment that will suit the needs of even the smallest printing shop is available.
- Reduces the mass of waste entering the wastesteam.
- Allows the fixing bath to be reused.
- The recovered silver is worth approximately 80% of the commodity price.

Limitations of Silver Recycling

- For economic reasons, film should be separated into “mostly black” versus “mostly clear.”

5.11 Waste Water Treatment

Water is an indispensable part of almost all industrial activities and in most cases becomes contaminated during the process. Many industrial plants have pre-treatment processes for wastewater to reduce the quantities or toxicity of pollutants in the wastewater. In most cases this is required when the publicly-owned treatment works (POTW) is not equipped to hand the contaminants in a particular facilities wastewater.

The POTW must process wastewater from a variety of sources including communities, industrial processes, commercial usage (office buildings and small businesses) and storm and ground water. Wastewater is 99.94 percent water with the remainder being contaminates in the form of dissolved or suspended solids. The suspended matter is often referred to as “suspended solids” to differentiate it from pollutants in solution. “Sewage” usually connotes human waste, but the term also includes everything else that makes its way from homes to sewers, coming from drains, bathtubs, sinks, and washing machines. There are basically three types of sewage systems that convey wastewater:

- Sanitary Sewer System - A system that carries liquid and water carried wastes from residences, commercial buildings, industrial plants, and institutions, together with minor quantities of ground, storm, and surface wastes that are not admitted intentionally.
- Storm Sewer System - A system that carries stormwater and surface water, street wash and other wash waters, or drainage, but exclude domestic wastewater and industrial wastes.

Notes

- Combined Sewer System - A system intended to receive both sanitary wastewater and storm or surface water.

This section briefly discusses wastewater pretreatment.

5.11.1 Process Description

Wastewater is generated in many of the operations discussed earlier in this chapter. Many of these facilities will be required to pretreat their wastewater prior to discharge to the sanitary sewer. Pretreatment of wastewater usually involves flocculation, pH adjustment, settling to remove solids. Sometimes flocculation can be achieved through pH adjustment or other chemicals may be added to facilitate precipitation of dissolved contaminants. Other types of treatment systems are available depending on the contaminants and contamination level. The extent to which a facility may have to treat wastewater depends on the contamination levels in the water.

The wastewater components of major concern are those which will: 1) deplete the oxygen resources of the stream or reservoir to which they are discharged, 2) support undesirable growth of organisms or fauna in receiving waters, or 3) those with health adverse effects, or even just esthetic impact (foul odor, discoloration etc.). The major pollutants are made up of both organic and inorganic matter.

The organic compounds are normally composed of a combination of carbon, hydrogen, oxygen and, in some cases, nitrogen. There could be other elements as well, such as sulfur, phosphorus and iron. The principal groups found in wastewater are proteins (40-60%), carbohydrates (25-50%) and fats and oils (about 10%). Inorganic compounds are sulfates, chlorides, phosphorus and heavy metals. Some elements of both groups are present as suspended matter. A substantial portion of organic matter is biodegradable, those which serve as food sources for bacteria and other microorganisms. The biological breakdown of these materials consumes oxygen. The amount of oxygen required to stabilize the biodegradable organics is measured in biochemical oxygen demand (BOD). This parameter is used to size treatment facilities and in predicting the effects of treated wastewater discharges on receiving waters. The chemical oxygen demand (COD) test is used to measure quantities of nonbiodegradable organics, such as pesticides. Inorganic salts containing calcium, magnesium, sodium, potassium, chlorides, sulfates and phosphates are other pollutants which may be contained in the waste streams. These dissolved organic and inorganic pollutants are referred to as total dissolved solids (TDS).

There are three major categories for wastewater treatment:

- Primary treatment
- Secondary treatment
- Advanced wastewater treatment

Primary treatment removes from the wastewater those pollutants that will either settle out or float. First the water flows through a screen that removes large floating objects. After screening the water passes into a grit chamber, where sand, grit, cinders, and small stones are allowed to settle to the bottom. The grit or gravel is then removed. At that point the water still contains suspended solids that can be removed in settling tanks. Floating material is skimmed from the surface.

Some of the types of the secondary treatments are discussed below.

5.11.1.1 Trickling Filters

A trickling filter consists of a bed of coarse material, such as stones, plastic grids or slats, over which the wastewater is sprinkled. As the wastewater trickles through the bed, microbial growth occurs on the surface of the filter. This method provides the necessary contact between the wastewater and the microbial population. This process is illustrated in Exhibit 5.14 below.

5.11.1.2 Oxidation

Oxidation ponds are large shallow ponds (lagoons) designed to treat wastewater through the interaction of sunlight, wind, algae, and oxygen. The lagoons (ponds) are one of the most used secondary treatment systems. The raw wastewater enters the pond at a single point in the middle of the lagoon or at one edge. The water is between 2-4 feet deep; deep enough to prevent weed growths but not deep enough to

Notes

prevent mixing by the wind. Shallow ponds are usually aerobic; meaning that oxygen is present, throughout; only a layer of sludge on the bottom being anaerobic. Algae grow by taking energy from the sunlight and consuming the carbon dioxide and inorganic compounds released by the action of the bacteria in the pond. The algae, in turn, release oxygen needed by the bacteria to supplement the oxygen introduced into the lagoon by the wind action. The most critical factor is to insure that enough oxygen will be present to maintain aerobic conditions. Otherwise odor problems can be bothersome. The sludge from the bottom has to be periodically removed by dredging. Advantages of oxidation ponds are easy construction, simple operation and maintenance. Among disadvantages are large space requirements and frequent removal of algae from the effluent.

Exhibit 5.14: One and Two Stage Trickling Filter Systems

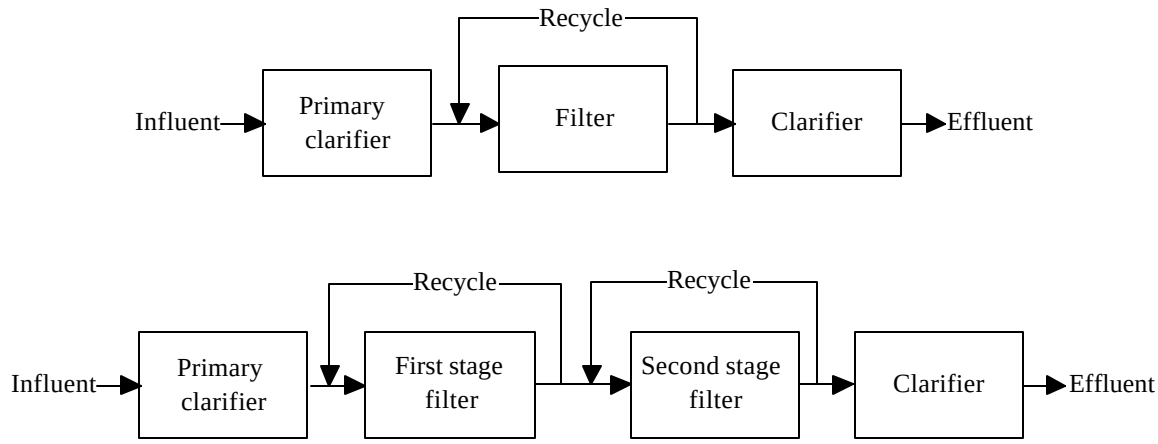

5.11.1.3 Activated Sludge

The activated sludge process is a biological wastewater treatment technique in which a mixture of wastewater and biological sludge (microorganisms) is agitated and aerated. The biological solids are separated from the treated wastewater and returned to the aeration process as needed. The activated sludge derives from the biological mass formed when air is continuously injected into the wastewater. Under such conditions, microorganisms are mixed thoroughly with the organics under conditions that stimulate their growth through use of the organics as food. As the microorganisms grow and are mixed by the agitation of the air, the individual organisms clump together (flocculate) to form an active mass of microbes called "activated sludge." In practice, the wastewater flows continuously into an aeration tank where air is injected to mix the activated sludge with the wastewater and to supply the oxygen needed for the microbes to break down the organics. Advantages include the fact that the process is versatile because the design can be tailored to handle a wide variety of raw wastewater compositions and to meet a variety of effluent standards. The process is capable of producing a higher quality effluent than the trickling filter process. The disadvantage is a necessity of a careful operation.

5.11.1.4 Chlorination and Other Disinfection Techniques

Disinfection is the killing of pathogenic bacteria and viruses found in the wastewater. Disinfection is the last step of the secondary treatment. The most commonly used method is some form of chlorination during which the chlorine is injected into the wastewater by automated feeding systems. The wastewater then flows into a basin, where it is held for approximately thirty minutes to allow the chlorine to react with the pathogens.

An alternative to chlorine is ozone or usage of UV light. These methods are not as widely used as chlorine because they do not have the residual effect of chlorine.

Notes

5.11.2 Waste Description

There are two wastes produced from wastewater treatment operations: water and sludge. The water is discharged to the sanitary sewer if it meets discharge permit limits. The sludge is disposed of as either hazardous or non-hazardous waste depending on the plant operations and constituents in the sludge.

5.11.3 Pollution Prevention Opportunities

Pollution prevention opportunities for wastewater treatment processes are classified according to the waste management hierarchy in order of relevance; first, source reduction techniques, then secondly, (in-process) recycling options.

5.11.3.1 Source Reduction

There are many source reduction opportunities for wastewater as discussed in earlier sections of this chapter.

5.11.3.2 Recycling

Recycling and reuse opportunities exist both on and off-site for facilities. Recycling and reuse have innumerable benefits both financially and environmentally.

In some cases it is possible to recycle water before it reaches the wastewater treatment process the assessment team should review sources of wastewater carefully to evaluate possible opportunities for reuse of water in process. Other times it may be possible to reuse a portion of treated wastewater in less critical plant operations or to reclaim contaminants from the wastewater. For example, it may be possible to process waters containing high concentrations of metal through an electrolytic recovery unit (or other equipment of similar function) to reclaim the metals in the water for later reuse or recycling.

Notes

REFERENCES

1. *Guide to Cleaner Technologies, Cleaning and Degreasing Process Changes*: 1994; U.S. Environmental Protection Agency. Office of Research and Development, Washington DC 20460. EPA/625/R-93/017
2. *Guide to Cleaner Technologies, Alternatives to Chlorinated Solvents for Cleaning and Degreasing:* 1994; U.S. Environmental Protection Agency. Office of Research and Development, Washington DC 20460. EPA/625/R-93/016.
3. Callahan and Green; *Hazardous Solvent Source Reduction*: 1995; McGraw-Hill, New York, 10020; ISBN 0-07-009749-6.
4. *Manual: Pollution Prevention in the Paints and Coatings Industry*: 1996; U.S. Environmental Protection Agency. Office of Research and Development, Washington, DC 20460. EPA/625/R-96/003.
5. *International Waste Minimization Approaches and Policies to Metal Plating*: 1996; U.S. Environmental Protection Agency. Office of Solid Waste, Waste Minimization Branch, Washington, DC 20406. EPA/530/R-96/008
6. *Guide to Cleaner Technologies, Alternative Finishes*: 1994; U.S. Environmental Protection Agency. Office of Research and Development, Washington, DC 20406. EPA/625/R-94/007.
7. Freeman, Harry M., *Industrial Pollution Prevention Handbook*, 1995; McGraw-Hill, New York, NY 10020; ISBN 0-07-022148-0.
8. Joint Services Pollution Prevention Handbook, "Paint Stripper, Hot Tank," Revision: 8/96; Internet address: Http://enviro.nfesc.namy.mil/p2library/8-27_896.html
9. Joint Services Pollution Prevention Handbook, "Paint Stripping Using Wheat Starch Blasting," Revision: 8/96; Internet address: Http://enviro.nfesc.namy.mil/p2library/5-07_896.html
10. Joint Services Pollution Prevention Handbook, "Degreasing and Paint Stripping Using Sponge Blasting," Revision: 7/96; Internet address: Http://enviro.nfesc.namy.mil/p2library/5-06_796.html
11. Joint Services Pollution Prevention Handbook, "High and Medium Pressure Water Paint Stripping 8/96; Internet address: Http://enviro.nfesc.namy.mil/p2library/5-02_896.html
12. Joint Services Pollution Prevention Handbook, "Paint Stripping Using Sodium Bicarbonate Medium," Revision: 8/96; Internet address: Http://enviro.nfesc.namy.mil/p2library/5-02_896.html
13. 12th Annual Aerospace Industry, Hazardous Materials Management Conference, "FLASHJET Paint Stripping Effects on Material Properties", Conference Proceedings from August 1997, Technology Group 2.
14. Joint Depot Maintenance Analysis Group Technology Assessment Division, *Joint Paint Removal Study: Final Report Laser*, October 1996
15. Joint Services Pollution Prevention Handbook, "Carbon Dioxide Blasting Operations," Revision: 9/96; Internet address: Http://enviro.nfesc.namy.mil/p2library/5-02_896.html
16. USEPA Office of Research and Development, "Manual: Pollution Prevention in the Paints and Coatings Industry," September 1996, pg. 146.
17. McGuinn, Young, and Louis Theodore. Pollution Prevention. Van Nostrand Reinhold Press, NY, NY; 1992.
18. Guides to Pollution Prevention: The Commercial Printing Industry: 1990; U.S. Environmental Protection Agency. Office of Research and Development, Washington, DC 204060. EPA/625/7-90/008.
19. *Guides to Pollution Prevention: The Fabricated Metal Products Industry*: 1990; U.S. Environmental Protection Agency. Office of Research and Development, Washington, DC 20460. EPA/625/7-90/006.

Notes

CHAPTER 6. ELECTRIC EQUIPMENT

This chapter discusses the electric motors, lighting and associate equipment. A description of each type of equipment, its general uses, operation, and common opportunities for energy conservation are presented.

6.1 Motors

Motors represent the largest single use of electricity in most industrial facilities. The function of an electric motor is to convert electrical energy into mechanical energy. In a typical three-phase AC motor, current passes through the motor windings and creates a rotating magnetic field. The magnetic field in turn causes the motor shaft to turn. Motors are designed to perform this function efficiently; the opportunity for savings with motors rests primarily in their selection and use.

6.1.1 Idle Running

The most direct power savings can be obtained by shutting off idling motors, thereby eliminating no-load losses. While the approach is simple, in practice it calls for constant supervision or automatic control. Often, no-load power consumption is considered unimportant. However, the idle no-load current is frequently about the same as the full-load current.

An example of this type of loss in textile mills occurs with sewing machine motors that are generally operated for only brief periods. Although these motors are relatively small (1/3 horsepower), several hundred may be in use at a plant. If we assume 200 motors of 1/3 horsepower are idling 90 percent of the time at 80 percent of full-load ratings:

Cost of idling per year = 200 motors x 1/3 hp x 80% of load x 6,000 hrs/yr. x 90% idling x $0.041/hp-hr

= $11,800

A switch connected to the pedal can provide automatic shutoff.

6.1.2 Efficiency at Low Load

When a motor has a greater rating than the unit it is driving requires, the motor operates at only partial load. In this state, the efficiency of the motor is reduced as illustrated in Exhibit 6.1. The use of oversized motors is fairly common because of the following conditions:

- Personnel may not know the actual load; and, to be conservative, select a motor larger than necessary.
- The designer or supplier wants to ensure his unit will have ample power; so he suggests a driver that is substantially larger than the real requirements. The maximum load is rarely developed in real service. Furthermore, most integral horsepower motors can be safely operated above the full-load rating for short periods. (This problem may be magnified if there are several intermediaries.)
- When a replacement is needed and a motor with the correct rating is not available, personnel install the next larger motor. Rather than replace the motor when one with the correct rating becomes available, the oversized unit continues in use.
- A larger motor is selected for some unexpected increase in driven equipment load that has not materialized.
- Process requirements have been reduced.
- For some loads, the starting or breakaway torque requirement is substantially greater than the running torque; thus, oversizing of the motor is a frequent consequence, with penalties in the running operation.

Plant personnel should be sure none of the above procedures are contributing to the use of oversized motors and resulting in inefficient operation.

Notes

Replacement of underloaded motors with smaller motors will allow a fully loaded smaller motor to operate at a higher efficiency. This arrangement is generally most economical for larger motors, and only when they are operating at less than one-third to one-half capacity, depending on their size.

The identification of oversized motors will require taking electric measurements for particular pieces of equipment. The recording wattmeter is the most useful instrument for this purpose to analyze the load over a representative period of time.

Another approach that provides an instantaneous reading is to measure the actual speed and compare it with the nameplate speed. The fractional load, as a percent of full nameplate load, can be determined by dividing the operating slip by the full-load slip. The relationship between load and slip is nearly linear. Other motors at the facility can often be used as replacements, reducing or eliminating the investment required for new motors. Adapter plates and couplings to accommodate the smaller motors would be the major expense. Scheduling the changes to coincide with maintenance of the motors minimizes the installation costs.

Exhibit 6.1: Motor Efficiency

(Typical T-Frame, NEMA Design B Squirrel Cage Induction Motor - 1,800 rpm)

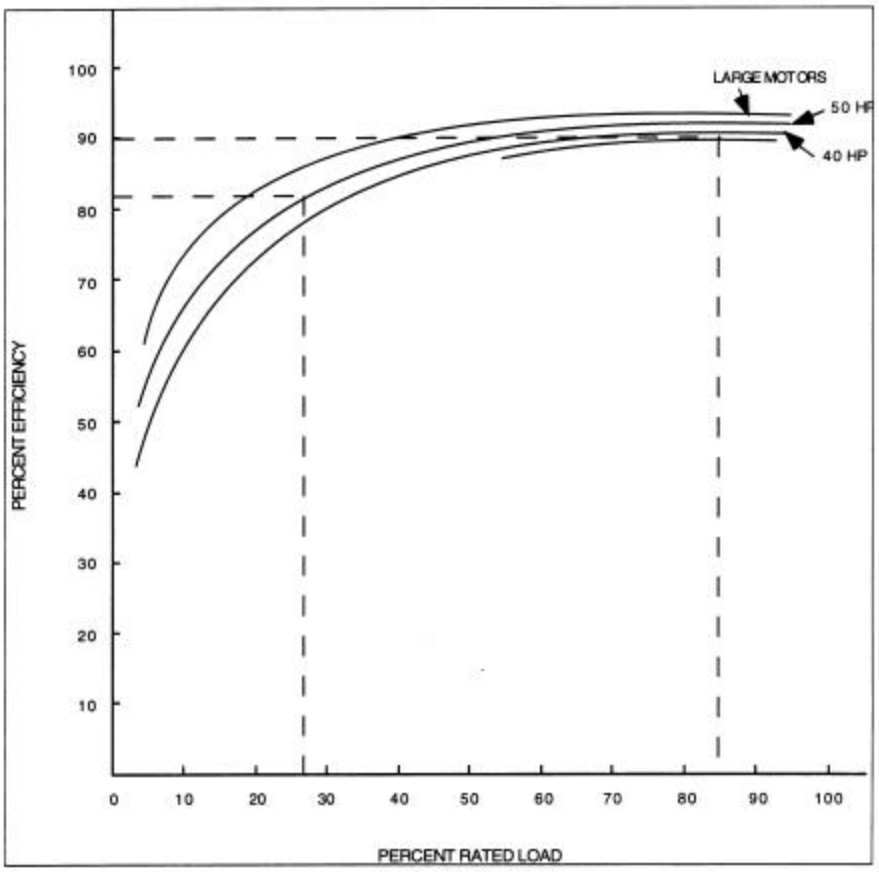

For example, the annual savings for replacing a 50-horsepower motor operating at 25 percent of rated load with a 15-horsepower motor that will operate near full load is:

$$L_{FL} = 0.746\,(hp)\left(\frac{1}{Eff_{FL} - 1}\right)$$

Notes

$$L_{PL} = 0.746\,(hp)(PL)\left(\frac{1}{Eff_{PL} - 1}\right)$$

where

L = losses - kW

Eff = motor efficiency

subscripts

FL = at full load

PL = at partial load

$$L_{FL} = 0.746(15)\left(\frac{1}{0.90} - 1\right) = 1.24\,kW$$

$$L_{PL} = 0.746(50)(0.25)\left(\frac{1}{0.837} - 1\right) = 1.82\,kW$$

Reduction in Losses = 0.58 kW

Annual Savings = 0.58 kW x 6,000 hrs/yr x $0.05/kWh = $174

6.1.3 High-Efficiency Motors

Whenever possible, all new motor purchases should be high efficiency motors. Payback of the premium expense of high-efficiency motors is usually less than two years for motors operated for at least 4,000 hours and at 75 percent load. An exception may exist when the motor is only lightly loaded or operating hours are low, as with intermittent loads. The greatest potential occurs in the 1 to 20 horsepower range. Above 20 horsepower the efficiency gains become smaller, and existing motors over 200 horsepower are already relatively efficient.

When an equipment manufacturer supplies motors, high-efficiency motors should be specified at the time of purchase. Otherwise, manufacturers normally supply motors of standard design because of their lower cost. Because of competitive pressure, these types of motors are likely to be less efficient. They have a lower power factor, not possible to spare, and they are more difficult to rewind.

Higher-motor efficiency is obtained in the high efficiency motors through the:

- Use of thinner steel laminations in the stators and rotors;
- Use of steel with better electromagnetic properties;
- Addition of more steel; increase of the wire volume in the stator;
- Improved rotor slot design; and
- The use of smaller more efficient fans.

Many of these approaches involve the use of more material, increased material costs, or higher manufacturing costs, which accounts for the higher first cost. However, the 25 to 30 percent higher initial cost is offset by lower operating costs. Other benefits of high-efficiency motors include less effect on performance from variations in voltage phase imbalance, and partial loading.

The calculation of the simple payback for energy-efficient motors can be complex because of the variables involved. Determination of the operating cost of the motor requires multiplying the amount of electricity the motor uses by the number of hours the motor is operated and by the user's electrical cost.

Notes

Each of these factors has its own variables, including changes in production schedules, variations in motor load, and demand charges. Some of these figures may be difficult to pinpoint.

Even when savings calculations are attempted, they can be subject to error because the actual efficiency of the particular motor is generally not known. All manufacturers do not use the same test technique to measure efficiency; as a result, ratings stamped on nameplates may not be comparable. Most manufacturers in the United States use a "nominal" efficiency that refers to a range of efficiencies into which a particular motor's efficiency must fall. Statistical techniques are used to determine t efficiency of a motor with any given nominal efficiency. For example, a nominal efficiency of 90.2 percent has a minimum efficiency of 88.5 percent.

Many users report adopting high-efficiency motors as standard practice without attempting to justify the premium except in the case of larger-sized motors. In general, paybacks of approximately one year have been experienced.

Published ratings vary for specific motors. For instance, a 100-hp, 1,800-rpm, totally enclosed, fan-cooled motor from one manufacturer has a guaranteed minimum efficiency of 90.2 percent at full load in the standard line and 94.3 percent in the high-efficiency line. The equivalent size motor of another manufacturer has the same 90.2 efficiency rating for the standard model, but the high-efficiency model has a guaranteed minimum efficiency of 91.0 percent. Verification of actual efficiency of a particular motor requires the use of sophisticated testing equipment.

Because of this variation, the use of the guaranteed minimum efficiency is more conservative in evaluating savings because all motors should be equal to or higher than the value specified. Exhibit 6.2 and Exhibit 6.3 compare standard T-frame TEFC motors with high-efficiency motors.

Exhibit 6.2: Typical Efficiency Comparison for 1 800 rpm Motors: General Electric

	Standard T-Frame TEFC				**High Efficiency TEFC**			
	Nominal Average Expected Efficiency			Guaranteed Minimum	Nominal Average Expected Efficiency			Guaranteed Minimum
Horse power	Full Load	75% Load	50% Load	Full-Load Eff	Full Load	75% Load	50% Load	Full-Load Eff
10	83.0	82.0	81.0	Not Available	90.2	91.0	91.0	88.9
15	84.0	84.0	83.0		91.7	92.4	92.4	90.6
20	86.0	87.0	87.0		93.0	93.6	93.6	92.0
25	86.0	87.0	87.0		93.0	93.6	93.0	92.0
30	88.0	88.0	88.0		93.0	93.6	93.6	92.0
40	88.0	88.0	87.0		93.6	94.1	93.6	92.7
50	89.0	89.0	89.0		94.1	94.1	94.1	93.3
75	91.5	91.5	91.0		95.0	95.0	94.5	94.3
100	92.0	92.0	91.0		95.0	95.0	95.0	94.3
125	91.5	91.5	90.0		95.0	95.0	94.1	94.3
150	93.0	93.0	91.5		95.8	95.8	95.4	95.2
200	93.0	93.5	93.0		95.8	95.8	95.8	95.2

Notes

Exhibit 6.3: Typical Efficiency Comparison for 1,800 rpm Motors: Westinghouse

	Standard T-Frame TEFC				High Efficiency TEFC			
	Nominal Average Expected Efficiency			Guaranteed Minimum	Nominal Average Expected Efficiency			Guaranteed Minimum
Horse power	Full Load	75% Load	50% Load	Full-Load Eff	Full Load	75% Load	50% Load	Full-Load Eff
10	88.5	87.8	85.2	86.5	90.2	90.4	89.3	88.5
15	88.5	88.2	86.1	86.5	91.7	91.9	91.0	90.2
20	88.5	88.6	87.2	88.5	91.7	91.9	90.9	90.2
25	90.2	89.2	86.7	88.5	93.0	93.3	92.8	91.7
30	90.2	89.9	88.0	88.5	93.0	93.3	92.8	91.7
40	90.2	89.7	87.9	88.5	93.0	92.6	91.0	91.7
50	91.7	91.2	89.5	90.2	94.1	93.7	92.4	93.0
75	91.7	90.8	88.4	90.2	94.1	93.8	92.6	93.0
100	93.0	92.6	91.0	90.7	95.0	94.8	93.8	94.1
125	93.0	92.5	91.0	90.7	95.0	94.6	93.5	94.1

6.1.4 Reduce Speed/Variable Drives

When equipment can be operated at reduced speeds, a number of options are available. The examples discussed below are representative for all industries.

6.1.4.1 Variable Frequency AC Motors

When centrifugal pumps, compressors, fans, and blowers are operated at constant speed and output is controlled with throttled valves or dampers, the motor operates at close to full load all the time--regardless of the delivered output. These closed dampers and valves dissipate substantial energy. Significant energy savings can be realized if the driven unit is operated at only the speed necessary to satisfy the demand. Variable speed drives permit optimum operation of equipment by closely matching the desired system requirements.

Variable-frequency AC controllers are complex devices, and until recently have been expensive. However, they work with standard AC induction motors, that allows them to be easily added to an existing drive. With lower equipment cost and increased electric costs, they become cost effective in many applications. Many types of pumps (centrifugal, positive displacement, screw, etc.) and fans (air cooler, cooling-tower, heating and ventilating, etc.), as well as mixers, conveyors, dryers, colanders, crushers, grinders, certain types of compressors and blowers, agitators, and extruders, are driven at varying speeds by adjustable-speed drives.

This example illustrates the energy savings for an adjustable-speed drive on a fan. Exhibit 6.4 shows a fan curve for pressure versus flow characteristics. The intersection of the fan and system curve at point A shows the natural operating point for the system without flow control.

If a damper is used to control the flow, the new operating point becomes point. However, if flow control is done by fan speed, the new operating point at reduced speed becomes point C. The respective horsepowers are shown on the horsepower curves as points B' and C'.

Notes

Exhibit 6.4: Fan Drive: Variable Speed vs. Valve Control

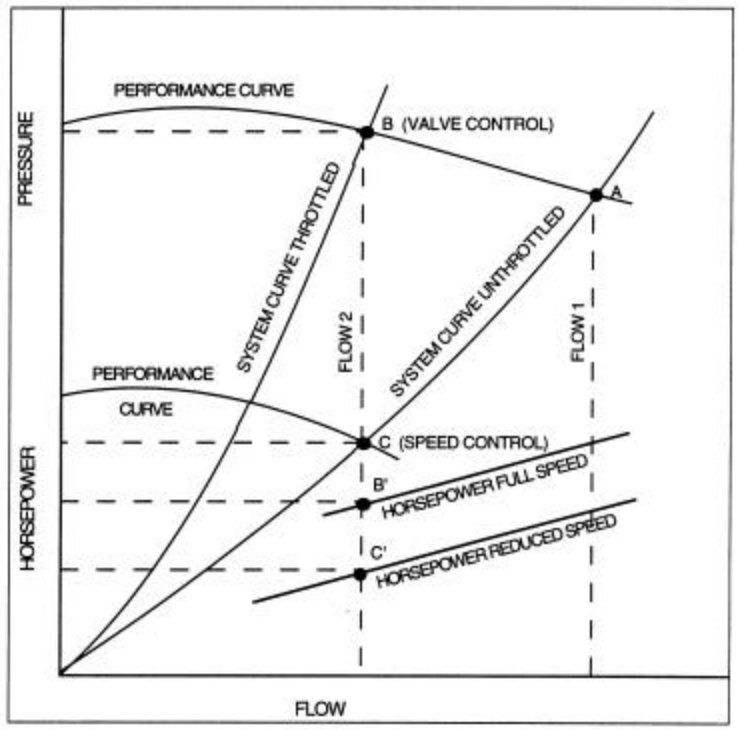

Determination of the energy savings requires calculating the horsepower based on the fan curve and the duty cycle at which the fan is operating. As shown in Exhibit 6.5, the results for a fan controlled by damper are assumed to be as follows:

Exhibit 6.5: Results for a Fan Controlled by Damper

CFM%	Fan hp	Duty Cycle	Weighted hp
100	35	10	3.5
80	35	40	14.0
60	31	40	12.4
40	27	10	2.7
		Total	32.6

For machines that have a free discharge, the fan affinity formula below is used to calculate the reduced horsepower for a variable speed drive.

$$\frac{hp_1}{hp_2} = \left(\frac{N_2}{N_1}\right)^3$$

For example, the horsepower for a fan operated at one half speed is:

$$\frac{hp_1}{hp_2} = \left(\frac{0.5}{1}\right)^3 = 12.5\% \text{ of full load}$$

Notes

Consequently, significant savings are possible when speeds can be reduced. The new fan horsepower with variable speed is show in Exhibit 6.6.

Exhibit 6.6: Fan Horsepower with Variable Speed Motor

CDM%	Fan hp	Duty Cycle	Weighted hp
100	35	10	3.5
80	18	40	7.5
60	7.56	40	3.024
40	2.24	10	0.224
		Total	13.948

The variable speed drive requires less than half the energy of the outlet damper for this particular duty cycle.

The annual savings (AS) is:

AS = (32.6 hp - 13.948 hp) x 6,000 hrs x $0.041/hp-hr = $4,590/yr

The installed cost of variable drive for a 35-hp motor is approximately $10,000. Equipment costs per hp decrease significantly with size, starting at about $250/hp for a 75-hp motor.

In actual practice, the efficiency of the motor should be factored in for a more accurate saving calculation based on kW input. The efficiency of the motor begins to drop significantly below 50 percent of rated capacity.

The above calculations assume a free discharge. If a static head is present, as in the case of a pump, the static head changes the system curve so that the affinity laws cannot be used directly to calculate the horsepower at reduced speed. In this case, precise knowledge of the pump and the system curves is required. Then detailed analysis with the aid of a computer is advisable.

6.1.4.2 Solid State DC Drives

Similar energy savings can be realized by varying drive speeds of DC motors. Initial cost is greater than for a variable frequency AC motor drive, particularly in a retrofit situation where the existing AC motor can be used directly with the electric controller. Brush and commutator maintenance is also a major cost with DC drives. DC systems are also more sensitive to corrosive and particle-laden atmospheres that are common in an industrial environment.

Accordingly, AC drives are preferred unless process conditions requires some of the special characteristics of a DC system such as very accurate speed control, rapid reversal of direction, or constant torque over rated speed range. Applications include driving of extruders, drawing machines, coaters, laminators, winders, and other equipment.

Other established techniques for varying the speed of a motor are electromechanical slip devices, fluid drives, and the wound-rotor motor. These devices control speed by varying the degree of slip between the drive and the driven element. Because the portion of mechanical energy that does not drive the load is converted to heat, these devices are less efficient and are used primarily because of special characteristics in a given application. For example, fluid drives might be used for a crusher because they are characterized by generally high power capacities, smooth torque transmission, tolerance for shock loads, ability to withstand periods of stall conditions, inherent safety (totally enclosed with no moving contact), and a tolerance of abrasive atmospheres.

Because variable frequency and solid state drives alter the operating speed of the prime mover, they are preferred for energy conservation reasons.

6.1.4.3 Mechanical Drives

Mechanical variable-speed drives are the simplest and least expensive means of varying speed. This type of adjustable sheaves can be opened or closed axially, thus changing the effective pitch at which

Notes

the belt contacts the sheaves. The chief advantages of mechanical drives are simplicity, ease of maintenance, and low cost. Their chief disadvantage is a moderate degree of maintenance and less accurate speed control (normally 5 percent).

Belt drives are available for low to moderate torque applications over a power range to 100 hp. Efficiencies of belt drives are 95 percent, and the reduction ratio can be as much as 10:1. Metal chain drives for high torque applications are also available. These are similar in principle to belt drives, but use metal belts instead of rubber-fabric belts.

6.1.4.4 Single-Speed Reduction

When a single speed will satisfy the need for speed reduction, less expensive options are available. Although variable speed offers the advantage of using optimum speed in all situations, if the speed range is narrow and the portion of time operated at the lower speeds is small, a slower single speed is probably the most cost-effective approach. These inexpensive options include changes in belt drives, installation of gear reducers, and installation of slower speed motors.

With a belt drive, a speed reduction can be accomplished at minimum expense by simply changing belt sheaves. Since the change can be conveniently reversed by reinstalling the old sheaves, this method has application when a reduced output is needed only for an extended period, such as seasonally. Another opportunity may exist when production levels are reduced for an indefinite time, but the original capacity may be required again in the future. A similar approach may be taken with a gear change where gear reducers are used.

When a one-time speed reduction is needed, a slower-speed motor can be substituted. This is a more long term option as it requires a complete equipment substitute.

6.1.4.5 Two-Speed Motors

A two-speed motor is an economical compromise between a fixed single-speed and a variable drive. As illustrated in the previous example, energy savings are significant because the power required is proportional to the cube of the speed (rpm). In practice, a slight increase may result from friction losses. This approach can be used in combination with some throttling to control output within a narrower range.

Two speeds can be obtained with a single winding, but the slower speed must be one-half of the higher. For example, motor speeds might be 1,800/900, 1,200/600, or 3,600/1,800. When a motor at other ratios is required, two sets of stator windings are necessary. Multi-speed squirrel-cage motors can also be obtained which have three or four synchronous speeds.

The cost of two-speed motors is approximately twice the cost of a single-speed motor. If a motor needs to be operated at the slower speed for any appreciable time, the savings will easily justify the added investment. Multi-speed motors also need more expensive starters because the overload protectors must be sized differently at each speed.

6.1.5 Load Reduction

A reduction in motor load is one of the best means of reducing electricity costs. Proper maintenance of equipment will also reduce motor load by eliminating friction losses from such sources as the misalignment of equipment, frozen bearings, and belt drag. Proper lubrication of all moving parts such as bearings and chain drives will minimize friction losses. The substitution of ball or roller bearings for plain bearings, particularly on line shafts, is another good power saver.

6.1.6 High-Starting Torque

Loads requiring “normal” starting torque can be satisfied by a National Electrical Manufacturers Association (NEMA) B motor (the general-purpose motor most commonly used in trial plants) or a NEMA A motor. Where high-inertia loads are involved, selection of a motor specifically designed for high-torque capability can permit use of a smaller motor. A NEMA B motor sized to handle high-starting loads will operate at less-than-rated capacity once the load has been accelerated to full speed. On the other hand, selection of a smaller motor of NEMA C or D design can provide the same starting torque as a NEMA B motor but will operate closer to the full-rated load under normal running conditions.

Notes

6.1.7 Rewound Motors

Rewinding can reduce motor efficiency, depending on the capability of the rewinding shop. Shops do not necessarily use the best rewind procedure to maintain initial performance. In some cases the lost inefficiency, particularly with smaller-sized motors, may not justify rewinding.

Ideally, a comparison should be made of the efficiency before and after a rewinding. A relatively simple procedure for evaluating rewind quality is to keep a log of no-load input current for each motor in the population. This figure will increase with poor quality rewinds. A review of the rewind shop's procedure should also provide some indication of the quality of work. Some of the precautions that must be taken when selecting a facility to rewind motors are as follows.

- When stripping to rewind a motor, unless the insulation burnout is performed in temperature-controlled ovens or inorganic lamination insulation has been used, the insulation between laminations may break down and increase the eddy current losses.
- Roasting the old winding at an uncontrolled temperature or using a hand-held torch to soften varnish for easier coil removal should signal the need to go elsewhere.
- If the core loss is increased as a result of improper burnout, the motor will operate at a higher temperature and possible fail prematurely.
- If the stator turns are reduced, the stator core loss will increase. These losses are a result of leakage (harmonic) flux induced by load current and vary as the square of the load current.
- When rewinding a motor, if smaller diameter wire is used, the resistance and the I 2 R losses will increase.

A rewinding method developed by Wanlass Motor Corporation claims to increase efficiencies as much as 10 percent. The firm's technique involves replacing the winding in the core with two windings designed to vary motor speed according to load. Claims of improved efficiency have been disputed and tradeoffs have been determined to exist in other features of motor design (cost, starting torque, service life, etc.). While the Wanlass motor has been in existence for over a decade, potential users should recognize that the design remains controversial and has been generally regarded in the motor industry as offering no improvement over that which can be achieved through conventional winding and motor design techniques.

6.1.8 Motor Generator Sets

Solid-state rectifiers are a preferred source of direct current for DC motors or other DC uses. Motor-generator sets, which have been commonly used for direct current, are decidedly less efficient than solid-state rectifiers. Motor-generator sets have efficiencies of about 70 percent at full load, as opposed to around 96 percent for a solid-state rectifier at full load. When the sets are underloaded, the efficiency is considerably lower because efficiency is the product of the generator and motor efficiencies.

6.1.9 Belts

Closely associated with motor efficiency is the energy efficiency of V-belt drives. Several factors affecting V-belt efficiency are:

- Overbelting: A drive designed years ago should be reexamined to determine belt ratings. Higher-rated belts can result in an increase in efficiency.
- Tension: Improper tension can cause efficiency losses of up to 10 percent. The best tension for a V-belt is the lowest tension at which the belt will not slip under a full load.
- Friction: Unnecessary frictional losses will result from misalignment, worn sheaves, poor ventilation, or rubbing of belts against the guard.
- Sheave diameter: While a sheave change may not be possible, in general, the larger the sheave, the greater the drive efficiency.

Notes

Substitution of the notched V-belt (cog belt) for the conventional V-belt offers attractive energy savings. The V-belt is subjected to large compression stresses when conforming to the sheave diameter. The notched V-belt has less material in the compression section of the belt, thereby minimizing rubber deformation and compression stresses. The result is higher operating efficiency for the notched V-belt.

Given a 60-hp motor, annual operating cost (6,000 hrs) is $18,000. A conservative 1 percent improvement in efficiency results in annual savings of $180. The premium cost for six, size 128 belts is $78.

6.2 Lighting

Many lighting systems that represented good practice several years ago are inefficient in view of today's higher electrical costs and new technologies. A lighting conservation program not only saves energy but is also a highly visible indication of management's interest in conserving energy in general. The importance of lighting conservation, therefore, should be considered not only for its dollar savings but also for its psychological effect on the facility's entire conservation program.

6.2.1 Lighting Standards

The first step in any lighting conservation program is to adopt a lighting standard. A new standard issued by the Illuminating Engineering Society provides for a range of illuminance instead of a single value. Within the recommended range, the level of illuminance can vary depending on the age of the workers, the importance of speed and accuracy, and the reflectance of the task background. DuPont's recommended illumination levels for various working conditions are shown in Exhibits 6.7 - 6.9. The illumination level specified is to be provided on the work surface, whether this be horizontal, vertical, or oblique. When there is no definite work area, it is assumed that the illumination is measured on a horizontal plane, 30 inches above the floor.

Management should adopt these or similar lighting standards to ensure uniform application of lighting levels. Without a standard, reductions in lighting are often inconsistent and may result in insufficient illumination in some areas.

Exhibit 6.7: Dupont Recommended Light Levels for Service Building Interiors

Area	Footcandles* in Service	Area	Footcandles* in Service
Offices		Machine and millwright shops	
Private	70	Rough bench and machine work	50
Small General	70 70	Medium bench and machine work and tool maker's shop	100
General	70	Fine bench and machine work	200**
Stenographic	100	Extra fine bench and machine work	500**
Drafting rooms	125		
Files		Paint shops	
Active	30	Ordinary hand painting, rubbing, and finishing	30
Inactive	10	Fine finishing	70
Mail room		Spray painting booth	30
Sorting	50	Sheet metal shops	
General	30	Ordinary bench work	30
Conference rooms	70	Layout bench	70
Corridors and stairways	20	Machines—presses, shears, stamping, etc.	50

Exhibit 6.7: Dupont Recommended Light Levels for Service Building Interiors (Cont.)

Notes

Area	Footcandles* in Service	Area	Footcandles* in Service
Toilets and washrooms	20	Welding shops	
Restrooms	10	General illumination	50
Janitor's closets	10	Precision manual arc welding	1,000**
Lunch areas	30	Carpenter and wood working	
Main entrances		Rough sawing and bench work	30
Patios	5	Medium machine and bench work	50
Doorways and foyers	20	Fine bench and machine work	100
Lobbies	30	Electrical shops (maintenance)	
Interview rooms	50	General	30
Exits, at floor	5	Bench work—general	70
Medical and first aid		Insulating coil winding	100
Reception	50	Testing	70
First aid rooms	125	Instrument shops (maintenance)	
Doctor's offices	70	General	50
Nurse's offices	70	Bench work	100
Dressing rooms	20	Pipe shops	
Cot rooms	20	General (bending, etc.)	20
Telephone equipment		Cutting and threading	30
Switchboards	50	Laboratories—hoods, benches, and desks	
Terminal and rack equipment	50	Research	70
Blue print room	50	Control	50
Locker and shower and wash rooms	20	Power and steam plants—General	
Mechanical equipment operating areas (fan rooms, etc.)	20	Front of panels (vertical at 66 inches above floor)	50
Electrical equipment operating areas (motors, etc.)	20	Centralized control room	40
Inactive storage	5	Ordinary and boiler control boards	30
Loading docks and ramps	10	Bench boards (horizontal)	50
Store and stock rooms		Boiler room—main floor and basement	20
General—live storage	20	Gauge boards—front of panel (vertical)	30
Rough bulky material	10	Crusher house	10
Bin area used for dispensing		Coal conveyors and ash handling equipment	5
Small stock items	50	Condensers, deaerators, and evaporators	10

Notes

Exhibit 6.7: Dupont Recommended Light Levels for Service Building Interiors (Cont.)

Area	Footcandles* in Service	Area	Footcandles* in Service
Tool cribs	30	Auxiliaries, boiler feed pumps, tanks, compressors, power switchgear, battery rooms, screen house, intake well, transformer rooms, etc.	20
Gate houses		Catwalks	3
Pedestrian entrance	20	Water-treating area	20
Car entrance	5	Refrigeration compressors, air compressors, etc.	20
Solvent storage and dispensing		Pump houses	20
Storage in drums	5	Warehouses--general traffic area	5
Dispensing	10	Warehouses (in storage aisle at floor level)	15
Cylinder sheds	10		

* The illumination level in any area should be increased so that it is not less than 1/5 the level in any adjacent area.

** Obtained with a combination of general lighting and specialized supplementary lighting.

Exhibit 6.8: Dupont Recommended Illumination Levels for General Manufacturing

Area	Footcandles in Service	Area	Footcandles in Service
Hand furnaces, boiling tanks, stationary dryers, stationary and gravity crystallizers, etc.	20	Electric operating equipment (motors, general controls, etc.	20
Mechanical furnaces, generators and stills, mechanical dryers, evaporators, filtration mechanical crystallizers	30	Electrical control rooms where equipment requires frequent checking, adjustment, etc.	30
Tanks for extractors, cooking nitrators, percolators, electrolytic cells	30	Weight scales, gauges, thermometers, rotamers, etc. (Vertical on face of dials, etc.)	30
Tank and vat porthole lights, etc.		Control laboratories	50
Light interiors	20	Outdoor platform and tank farms	
Dark interiors	70	Active areas	5
Beaters, ball mills, grinders	30	Inactive areas	0.5
Mechanical operating equipment (compressors, fans, pumps, etc.)	20	Stairs, ladders, and steps	3

* Operating personnel do not perform exacting visual tasks except at process control panels, scales, gauges, etc. Necessary lighting is obtained with combination of general lighting plus supplementary lighting.

Notes

Exhibit 6.9: Dupont Recommended Illumination Levels for Outdoor Areas*

Area	Footcandles* in Service	Area	Footcandles* in Service
Bulletin and poster boards	10-V	Railroad yards	0.2
Flood lighting-building exteriors	15-V(max)	Roadways	
Entrances		Curves and intersections	0.5
Active (pedestrian or conveyance or both)	5	Platforms, catwalks, stairs, ladders, etc.	
Inactive (normally locked, infrequently used)	0.5	Platform operating decks	5
Loading and unloading platforms	3	Catwalks, stairs, and ladders	3
Protective lighting		Plant parking lots	
Boundaries and fence	0.2	General parking areas	0.3
Vital locations or structures	5	Entrances, exits, and walkways	2
Building surroundings	1	Gasoline dispensing pumps	3
General inactive area	0.1	Outdoor work areas	3

* As a matter of reference in comparing outdoor lighting values, the intensity of full moonlight a the earth's surface is approximately 0.025 footcandles.

6.2.2 Light Meter Audit

After standards have been adopted, a light meter audit to determine the existing lighting levels should be conducted for the entire facility. The condition of the lamps and fixtures should be taken into account when the audit is made. The cleanliness of the fixtures has an important effect on the light output. Also, some depreciation of light intensity occurs over the life of most lamps. If group relamping has been used, the lighting level will depend on the age of the lamps. Light loss of 10 to 15 percent is normal for standard 40 W fluorescent lamps that are approaching end of life.

6.2.3 Methods to Reduce Costs

Examples of energy conservation are given in the sections below. Some of them are rather simple and the implementation requires only the will to overcome some old entrenched habits of the people in the work place.

6.2.3.1 Turn off Lights

The most obvious and beneficial step to conserve energy is to turn off lights when they are not needed. This approach often requires an extensive publicity program to enlist the support of all employees. First-line supervisors must understand that conserving light is as much a part of their job responsibility as improving productivity. An effective way for members of management to show support for energy conservation is to turn off lights in their own offices when unoccupied.

Frequently, lights can be turned off in storage or operating areas that are not in use or are seldom occupied during periods of reduced production on the evening or the midnight shift. For example, it is common practice to leave office lights on until the cleaning crew has completed its work instead of turning them off as soon as the offices are vacated.

The lighting circuitry may not provide the flexibility needed for a partial curtailment. In this case, the cost to modify the wiring must be compared with the potential energy savings to determine whether rewiring is justified.

Fluorescent lamps are commonly left on over noon hours or other short periods because of the belief that frequent starts will shorten tube life. This problem is substantially reduced now with tubes that

Notes

are more tolerant of starts and the increased cost of energy compared with the tube cost. The break-even point for fluorescent lighting is usually 5 to 15 minutes, depending on the electric rate, lamp cost, and lamp replacement labor rate. With incandescent lights, however, energy will be saved each time they are turned off. For high-intensity discharge (HID) lamps, it is usually not practical to turn lights off for brief periods (less than 30 minutes) because of the long lamp restart time.

6.2.3.2 Automatic Controllers

A technique for ensuring that lights are turned off when the room is unoccupied is to use presence detectors (infrared, capacitance, or ultrasonic) that detect when the room is unoccupied and will automatically turn off the lights. One lighting control product uses an ultra-sonic sensor that can handle up to four 20 amp circuits. This allows control of electrical devices as well as lights. The unit costs about $150 uninstalled. The presence of people in a room is determined by a sensor that detects interruptions in the ultrasonic sound waves transmitted by the unit. The sensor then sends a signal to a controller to turn lights on or off. The sensor has a time-delay knob that can be manually set anywhere from 1 to 12 minutes to ensure that equipment stays on for a certain period of time after a room is occupied.

For example, annual savings for a unit controlling 5,000 watts of lighting that reduces lighting by two hours per day, five days per week at $0.05/kWh would be $125.

Another device that is used to avoid leaving lights on needlessly is a microprocessor-based automatic lighting control. These relatively inexpensive devices can be programmed to turn off lights when not needed. For example, one programmable controller being offered for about $500 can control up to 50 switches. The user can override the off function by turning on lights at his particular area. This is done with individual wall switches that cost about $30 per unit installed. When a lighting circuit turns off according to schedule, the toggle switches are moved to the off position. Switches can also be used alone or with an existing energy management system. The traditional approach has been to install lighting control systems separately, but firms are attempting to incorporate lighting systems with an energy management system because it is more cost effective.

6.2.3.3 Remove Lamps

Another direct method to reduce lighting is simply to remove lamps from service where less light is needed. This approach frequently applies to offices or areas in which uniform lighting has been provided. For example, if the fixture is located over an office doorway, lamps can often be removed without reducing the illumination level at the desktop. In four-lamp fixtures, two of the four lamps can be removed if only a partial reduction in illumination is possible. Office lighting loads can frequently be reduced 25 percent by this arrangement.

Excess lighting is also frequently provided in aisles, particularly when natural daylight may be sufficient. Lighting levels in storage areas are often higher than needed. This situation can develop when former operating areas are utilized for storage. Removal of lamps from these less-critical areas does not affect production.

Ballasts in fluorescent fixtures continue to consume current (approximately 10 percent of total load) after the lamps have been removed. The entire fixture should, therefore, be disconnected if lamps are removed (except for some lamp systems that have circuit interrupting lamp holders).

6.2.3.4 Maintain Lamps

Dirt and dust accumulations on the fixtures greatly affect lamp efficiencies. Light intensity can depreciate up to 30 percent by the time lamps are replaced; in extremely dirty conditions, depreciation can be higher. A minimal cleaning schedule for an average industrial environment is to clean fixtures when the lamps are replaced. The number of lamps required to provide the desired illumination level will depend on the plant's maintenance program. Initially, additional lighting to offset the gradual depreciation of light caused by dirt must be provided. If clean luminaires will improve lighting levels enough to permit the removal of some lamps, more frequent lamp maintenance may be justified. Cleaning costs must be balanced with energy costs to determine the optimum cleaning schedule.

In addition, dirty or discolored luminaire diffusers can also reduce light output considerably. Replacement or complete removal may allow the lighting requirements to be satisfied with fewer lamps.

Notes

6.2.3.5 Lower-Wattage Fluorescent Lamps and Ballasts

A reduction in fluorescent light level by removing lamps from service can result in a spotty effect that is unattractive or provides an unacceptably low or non-uniform level of illumination. An alternate approach to energy saving is substitution of lower-wattage fluorescent lamps and ballasts. The substitution may or may not reduce the lighting level, depending on the type of lamp used. Because the variety of fluorescent lamps is so extensive, the following discussion refers to the general purpose 4-foot rapid start lamp, but reduced-wattage lamps are also available in other sizes and types.

a) Standard Lamp: The standard lamp for many years has been the 40-watt cool white, CW (or warm white, WW) lamp. This is the least expensive lamp, but also the least energy efficient. Several more cost-effective fluorescent lamp systems are available which use less wattage.

b) Energy Saver (ES) Lamp: A first-generation reduced wattage or energy-saving lamp was introduced in 1974 in 35-watt ratings (now typically rated at 34 watts). These lamps can be used as direct replacements for 40-watt lamps in existing luminaires. They emit the same color white light as the lamps they replace. Energy consumption is reduced by 13 to 15 percent with a comparable reduction in light output. The conversion to the lower illumination level need not cause personnel problems because the level of illumination will temporarily increase if the existing system is relamped as a group and the luminaires are cleaned. The ES lamps cost approximately 40 percent more than the standard lamps. If the lower lumen output is acceptable, the energy savings results in an attractive payback.

c) White Lamps: A second generation of reduced-wattage lamps, generically designated as “lite white”, is available when more lumen output is needed than the ES lamp provides. The lite white lamps consume about the same energy as the ES lamps (34 watts) but with only about 6 percent reduction in light output. The color of light, however, has a somewhat lower color-rendering index than that of the cool white lamps. Although lite white color differs from cool white, the lamps are considered compatible in the same system. These lamps cost about 50 percent more than the standard lamps.

d) Lite White Deluxe Lamps: If color rendition is important, a third generation of ES lamp, designated as “lite white deluxe”, can be used. This lamp combines the high efficiency of the lite white lamp with even better color discrimination than the standard lamp. The lite white deluxe costs approximately three times as much as the standard lamp, but it can still be justified on the basis of energy saving. For example, a lite white deluxe costs $2.30 more than the standard lamp. Annual energy savings would be $1.80 (6,000 hrs. @ $0.05/kWh) for a payback of 1.3 years. If conditions permit use of the lower cost ED or lite white lamp, payback is about four months.

e) Ballasts: Several options are available in the ballasts that can be used with any of the lamps described above. The standard electromagnetic ballast is the least efficient but also least expensive type ballast. The luminaire manufacturer normally provides it unless another type is specified. The standard electromagnetic ballast is not economical in sizes of 34 watts and above.

f) ES Ballasts: A more efficient low-loss or energy-saving electromagnetic ballast is also available. In evaluating the ballasts, the savings must be considered as a unit with the lamps since the more efficient ballasts permit the lamps to operate at lower wattage as well. A two 34-watt lamp system with an ES ballast saves 8 to 10 watts over the same system with a standard ballast. The premium for the high-efficiency ballast is approximately $6. Annual savings would be about $2.70 (6,000 hrs. @ $0.05/kWh).

g) Electronic Ballasts: More energy-saving electronic ballasts can also be used. Electronic ballasts operate at a frequency of 25 kilohertz (25,000 Hz) compared to the 60 hertz for standard ballasts. The higher frequency allows the lamps to operate at lower wattage. ES lamps must be used with rapid start ballasts. Good quality fluorescent luminaires manufactured in recent years are normally equipped with such ballasts.

Notes

Initial problems of reliability with the electronic ballasts appear to have been overcome. Electronic ballasts, however, have many small components and a relatively short product history compared with the simple construction and long-established high reliability of the magnetic ballasts.

With electronic ballasts, approximately 10 less watts per two 34-watt lamp system are saved over the same system with an energy efficient ballast. The premium for the electronic ballast over an ES ballast is about $13. Annual savings would be $3.00 (6,000 hrs @ $0.05/kWh). The payback for the electronic ballast is about twice as long as that of the energy-saving ballast. Comparative prices for standard ballast, energy-saving magnetic ballast, and electronic ballast are approximately $16, $22, and $35, respectively.

h) Performance-Matched Systems: For minimum wattage systems it is necessary to use performance-matched fluorescent systems in which the lamp and ballast are specifically tailored to each other for optimum efficiency. Such systems might not operate satisfactorily if other than their designated companion ballasts and lamps are used. However, performance- matched systems use considerably less energy (28 watts per lamp) than the conventional 40-watt systems.

The premium necessary for the electronic ballasts with these systems may reduce the payback to unacceptable levels. However, when four lamps can be operated from one ballast, the economics are more attractive. Plants should evaluate the high-performance systems based on their electrical rates, conditions, and payback standards.

Energy-saving lamps are designed to operate closer to the optimum operating temperatures than conventional lamps and are not suitable for use in ambient temperatures below 60°F. At the lower temperatures ES lamps may be difficult to start or show sign of instability in operation by flickering. Accordingly, some low-temperature applications, such as warehouses, may not be suitable for ES lamps.

Below 60°F, standard fluorescent lamps will have a lower light output depending on the draft and lamp enclosure. Plastic sleeves or other jacketing that can retain heat can improve output when the light output has been noticeably reduced. However, light output will also start to decrease if above-bulb-wall temperatures exceed 100°F.

Users of ES lamps have reported some problems with ballast failure. ES lamps cause a slight increase in voltage across the capacitor, which in turn can cause premature failure in older ballasts. The problem, therefore, should be considered temporary until overage ballasts have been replaced.

A general problem to provide a more energy-efficient lighting system in a retrofit situation would be to replace any 40-watt lamps with one of the 34-watt lamps most suitable to the facility's conditions. This substitution can be done as individual lamps burn out, or they can be replaced on a group basis. The rapid payback usually justifies group replacement. More energy-efficient ballasts should also be substituted, but only as replacements are needed.

When a lower illumination level is acceptable but removal of a lamp would cause a problem of uneven illumination, a more uniform reduction in light level can be achieved by substituting special lamps. For example, Sylvania markets two versions of an ES lamp called Thrift/Mate. These lamps are intended to replace only one of a pair of lamps on the same ballast. When so installed, both the Thrift/Mate and the conventional lamp operate at reduced wattage. The two versions, designated TM33 and TM50, reduce energy consumption by 33 and 50 percent, respectively. The reduction in light output of the luminaire is equivalent to the reduction in power consumption.

Another method is to replace one of the two fluorescent lamps in a two-lamp fixture with a phantom tube. The phantom tube produces no light itself and the remaining real lamp in the fixture produces only about 70 percent of its normal illumination. The net result is a saving of two-thirds in the power used, with an illumination level of about one-third of that normally derived from a two-lamp fixture.

6.2.3.6 Fluorescent Retrofit Reflectors

Specular retrofit reflectors for fluorescent fixtures are available in two basic types: semi-rigid reflectors, which are secured in the fixtures by mechanical means, and adhesive films, which are applied directly to the interior surfaces of the fixture. Film applied directly to the existing fixtures is generally less efficient than the semi-rigid reflectors since it conforms to the fixture contours and cannot be formed to direct

Notes

light in any specific manner. Either silver or aluminum may be used as the reflecting media. On the average, silver film reflectors have a reflective film index between 94 and 96 percent; the index for aluminum is 85 to 86 percent.

In regard to the energy aspects of the reflectors, manufacturers claim the reflectors permit the removal of two lamps from a four-lamp dirty fixture. The illumination directly underneath the fixture is essentially the same. But at angles to either side of the fixture, the decrease is much more significant. The fixture has been changed from a diffuse fixture to a sharp cut-off fixture. The additional illumination level with the reflectors is due in part from enabling the remaining two lamps to operate at a lower temperature, which increases their light output 6 to 12 percent.

While removal of two lamps reduces energy 50 percent, the comparison is not on an equal basis and several tradeoffs should be recognized.

- The light pattern is more limited in area. The result can be non-uniform lighting on the work plane, dark spots between the fixtures, and darkened walls.
- The above claim of equivalent illumination is based on a comparison with a dirty fixture. The footcandles with two lamps and reflector is only 65 percent as much as four lamps with a clean conventional fixture.
- Lamp failure in a de-lamped fixture will not have the partial illumination provided by the second pair of lamps. Consequently, prompt replacement of burned-out lamps becomes more critical.
- The efficiency of any reflector depends on how well it is maintained. Even in a clean office environment the loss of light output due to dirt buildup in an unmaintained fixture can be as much as 35 percent. The reflectors may be more difficult to clean than normal fixture surfaces.
- Silver films are relatively new and their durability is somewhat unknown.
- The cost of a reflector often approaches the price paid for a new fixture. Approximate installation costs for the reflectors range from $35 to $65.

If the above tradeoffs are acceptable, then the energy savings would justify their use. However, if a one-third reduction in light output is acceptable, a more cost-effective option would be to use the Thrift/Mate lamps and possibly upgrade the cleaning schedule. The illumination from a clean two-lamp fixture will be equivalent to the illumination from a dirty two-lamp fixture with the retrofit reflector. Also, if unequal lighting is acceptable, possibly one-third of the existing fixtures could be removed instead.

6.2.3.7 Lamp Relocation

Poorly arranged light wastes energy. Traditionally, light systems have been designed to provide a uniform level of light throughout an entire area. However, with the increased cost of electric energy, the emphasis today is on designing illumination for the type of task and the location where it will be performed.

Non-uniform light is actually more visually pleasing as well as less energy consuming. When the actual work area is properly lighted, the remaining area requires only a moderate level of general lighting to provide reasonable visibility and to prevent an excessive brightness imbalance, which can cause visual discomfort.

Task lighting has a number of advantages:

- High light levels are concentrated only where needed and are matched specifically to the task. Overall lighting energy usage is thereby reduced.
- Less heat is generated by the lighting system.
- Lighting is usually more easily relocated as operations change.
- Luminaire maintenance and lamp replacement expenses are usually less because they are more readily accessible.

Notes

- Units are individually controlled, permitting them to be shut off when not needed.
- Lighting effectiveness is improved by permitting the most advantageous positioning. Reflection and shadows can be avoided.

6.2.3.8 Lighting System Replacement

Existing incandescent or mercury lighting systems are usually candidates for replacement. Incandescent lighting is suitable for certain applications, but its low efficiency makes it uneconomical for general illumination. A rapid payback can almost always be shown for replacing mercury with more efficient light sources, especially with high-pressure sodium.

If a lighting system must be designed to fit a new or modified installation, the alternative systems, listed with their relative outputs in Exhibit 6.10 should be considered.

High-pressure sodium (HPS) lamps provide the most light per energy input and are the most economical when their color characteristics are suitable (the decided yellow color of low-pressure sodium lamps is usually unsatisfactory for most industrial areas). This lamp is offered in a wide choice of wattages, ranging from a nominal 70 watts to 1,000 watts. Luminaire manufacturers also offer a broad variety of luminaires suitable for various applications in outdoor lighting, manufacturing, and office lighting.

Exhibit 6.10: Alternative Lighting Systems Approximate Initial Lumens per Watt Including Ballast

Type of Light	Smaller Sizes	Middle Sizes	Larger Sizes
Low Pressure Sodium	90	120	150
High Pressure Sodium	84	105	126
Metal Halide	67	75	93
Fluorescent	66	74	70
Mercury	44	51	57
Incandescent	17	22	24

HPS lighting has found wide acceptance as warehouse lighting, where color rendition is usually not critical. The high ceiling height common in warehouses is well suited to HPS lighting. To meet the challenge of illuminating warehouse aisles, asymmetrical luminaires specifically designed for aisle lighting are available. Overlap of light between fixtures will be adequate even if the luminaires are as much as three times as far apart as their mounting height from the floor. HPS luminaires are also available for low mounting heights. The flexibility of HPS lighting has permitted significant inroads into areas that were formerly reserved for fluorescent lighting.

For comparable wattage, HPS lamps deliver about 50 percent more lumens than mercury lamps, and 500 percent more than incandescent light sources. Efficiency of most sources increases at higher wattages, so for maximum economy, the HPS lighting system should be designed to use the largest sized lamps that are consistent with good lighting practice and controlled brightness.

6.2.4 Summary of Different Lighting Technologies

The potential for energy savings in lighting is twofold: the industry has produced some money (but not many) and energy saving products primarily because design engineers have specified excessive lighting levels over the years, and secondly some technological advances have occurred.

Notes

6.2.4.1 Incandescent

The following features can describe incandescent lighting (light produced by heating an element until it glows).

- Main reason for use is color rendition and dimming, although recently dimming has been made available for other types of light.
- Reduced wattage / reduced output replacements are now available although no more efficient.
- One type of PAR lamp is now being offered which has an infrared reflective film that makes the filament hotter and brighter.

6.2.4.2 Fluorescent

Fluorescent lighting can be summed as follows:

- Light is produced by emitting an electronic field, causing the phosphorous to glow (fluoresce).
- More energy efficient.
- Varying levels of color rendering are available depending on the quality of the rare earth phosphors, and the cost. Color rendering is arbitrary way to compare the color of the light using sunlight as 100 percent.
- New T8 (one inch diameter) lamps produce light more efficiently than previous lamps, but must be used with electronic ballasts.
- Compact fluorescent - twin tube, exit signs.

6.2.4.3 High Energy Discharge

The following types of lamps fall under the high energy discharge category:

- Mercury Vapor,
- Metal Halide,
- High Pressure Sodium, and
- Low Pressure Sodium.

Notes

REFERENCES

1. Coombs, V.T., The Possibility of Energy Saving by the Correct Sizing of Electric Motors, *Electrical Review*, pp 744-746, December 1975
2. Levers, W.D., The Electrical Engineer's Challenge in Energy Conservation., *IEEE Trans. on Industrial Applications*, 1A-11,4, 1975
3. Cotton, H., *Principles of Electrical Technology*, Pitman, 1967
4. Henderson, S.T., and Marsden, A.M., *Lamps and Lighting*, Arnold, 1972
5. Windett, A.S., *Reducing the Cost of Electricity Supply*, Gower Press, 1973
6. Zackrison, H.B., *Energy Conservation Techniques for Engineers*, Van Nostrand Reinhold Company, 1984
7. Lyons, S.L., *Management Guide to Modern Industrial Lighting*, Applied Science Publishers, 1972
8. Illuminating Engineering Society, *IES Lighting Handbook*, 1972

Notes

CHAPTER 7. HEAT

This chapter discusses sources of heat in industrial operations and associated equipment. A description of each heat source, its general uses, operation, and common opportunities for energy conservation are presented. There will be case studies referenced throughout the chapter that can be found in Appendix E.

7.1 Boilers

A boiler is a device where energy extracted from some type of fuel is converted into heat that is distributed to needed places to do useful work. In the process, the carrying media (water or steam) gives up the heat and is cyclically reheated again and again. There are examples where the media (steam) is not returned, such as locomotives, but in industrial processes covered in this manual it would constitute an exception. For the most part, boilers take advantage of the phase changes that occur in some substances (for example water). The phase change is associated with large amount of energy that can be harnessed to our benefit.

There are four principal boiler categories: (1) natural draft, (2) forced draft, (3) hot water or steam, and (4) fire tube or water tube. In a natural draft boiler, the combustion air is drawn in by natural convection and there is no control of the air/fuel ratio. For forced draft boilers, a blower controls the quantities of combustion air and the air/fuel mixture. Some boilers produce hot water, typically in the 160° to 190°F range, while others produce steam. Steam boilers may be low pressure (approximately 15 psi), medium pressure (15 to 150 psi), or high pressure (150 to 500 psi). Finally, boilers may be fire-tube or water-tube boilers. In a fire-tube boiler, the hot gas flows through tubes immersed in water, whereas in a water-tube boiler, the water flows through tubes heated by the hot combustion gases. There are also some very high temperature and superheat boilers but these are seldom encountered in typical manufacturing operations. The typical boiler used in small to medium sized industrial operations is a forced draft steam boiler at 120-150 psi and approximately 150 hp. The following measures are also applicable to utility boilers. Other than the major differences of not being natural draft boilers and producing steam at greater than 150 psi, utility boilers are similar to boilers commonly used by industry.

This section includes energy conservation strategies for boiler systems. Combustion air blower variable frequency drives, air/fuel ratio reset, turbulators, high-pressure condensate return systems, steam trap repair, and steam leak repair are discussed in this section.

7.1.1 Boiler Operation and Efficiency

An ideal model of a boiler operation is based on the Carnot cycle. The Carnot cycle is defined as two reversible isothermal and two reversible adiabatic processes. Heat is added to the cycle during the isothermal process at high temperature (T_H), then follows an adiabatic process producing work as the working fluid is expanded to a lower pressure. During the next isothermal stage, heat is rejected to the low temperature reservoir at T_L. During the last phase the working fluid is adiabatically compressed to finish the cycle. The Carnot cycle is the most efficient cycle for the given low and high temperatures and its efficiency is given by:

$$h = 1 - \left(T_1 / T_h \right)$$

The efficiency of a real boiler is always lower. A model Carnot cycle using the phase changing medium, would be a boiler that operates at constant temperature while adding heat to the working medium, then an expansion device (turbine) that operates adiabatically, a condenser that operates at constant temperature while rejecting heat from the medium and a compressor or a pump that adiabatically brings the medium to the starting point. The boilers are designed to operate at near constant pressure but in reality the temperature and pressure vary. If the devices are operated near the saturation region, they will operate at constant temperature as well as constant pressure. The quality of the medium is quite low at the end of expansion and the fluid before compression is a mixture of liquid and vapor instead of just liquid.

Notes

7.1.1.1 Boiler Efficiency Tips

Boiler efficiency can be improved and maintained through proper maintenance and monitoring of operation. The eight tips presented here are guidelines for improving boiler efficiency but are not all inclusive.

1. Conduct a flue gas analysis on the boiler every two months to test for fuel/air ratio settings and adjust air/fuel ratio to optimize efficiency. Optimal percentages of O_2, CO_2, and excess air in the exhaust gases are shown in Exhibit 7.1.

Exhibit 7.1: Optimal Flue Gas Composition

Fuel	O_2 (%)	CO_2 (%)	Excess Air (%)
Natural Gas	2.2	10.5	10
Liquid Petroleum Fuel	4.0	12.5	20
Coal	4.5	14.5	25
Wood	5.0	15.5	30

The air fuel ratio should be adjusted to the recommended optimum values if possible; however, a boiler with a wide operating range may require a control system to constantly adjust the air-fuel ratio.

2. A high flue gas temperature often reflects the existence of deposits and fouling on the fire and/ or water side(s) of the boiler. The resulting loss in boiler efficiency can be closely estimated on the basis that a 1% efficiency loss occurs with every 40°F increase in stack temperature.

   It is suggested that the stack gas temperature be recorded immediately after boiler servicing (including tube cleaning) and that this value be used as the optimum reading. Stack gas temperature readings should be taken on a regular basis and compared with the established optimum reading at the same firing rate. A major variation in the stack gas temperature indicates a drop in efficiency and the need for either air-fuel ratio adjustment or boiler tube cleaning. Exhibit 7.2 illustrates how the stack temperature rises with maladjusted air fuel ratios. In the absence of any reference temperature, it is normally expected that the stack temperature be less than 100°F above the saturated steam temperature at a high firing rate in a saturated steam boiler (this doesn't apply to boilers with economizers and air pre-heaters).

3. After an overhaul of the boiler, run the boiler and reexamine the tubes for cleanliness after thirty days of operation. The accumulated amount of soot will establish the criterion as to the necessary frequency of boiler tube cleaning.

4. Check the burner head and orifice once a week and clean if necessary.

5. Check all controls frequently and keep them clean and dry.

6. For water tube boilers burning coal or oil, blow the soot out once a day. The National Bureau of Standards indicates that 8 days of operation can result in an efficiency reduction of as much as 8%, caused solely by sooting of the boiler tubes.

7. Purity of water used for steam generation is extremely important. It is not usually possible to use untreated waters found in nature as boiler feed water as there are many impurities. Water must be treated to remove the impurities or convert them into some harmless form. Other means to remove impurities and buildup from boilers is a systematic removal by blowdown. This way an excessive accumulation of solids is prevented. Water treatment prevents the formation of scale and sludge deposits on the internal surfaces of boilers. Scale formations severely retard the heat flow and cause overheating of metal parts. The scale build-up and heat transfer relationship is demonstrated in Exhibit 7.3.

Notes

8. The frequency and amount of blowdown depend upon the amount and condition of the feed-water. Check the operation of the blowdown system and make sure that excessive blowdown does not occur. Normally, blowdown should be no more than 1% to 3% of steam output.

Exhibit 7.2: Boiler Efficiency (Natural Gas)

Excess Air	O_2 %	CO_2%	Net Stack Temperature						
			220	230	240	246	250	260	270
0.0	0.0	11.8	85.3	85.1	84.9	84.8	84.7	84.5	84.2
2.2	0.5	11.5	85.2	85.0	84.8	84.7	84.6	84.4	84.1
4.5	1.0	11.2	85.1	84.9	84.7	84.6	84.5	84.2	84.0
6.9	1.5	11.0	85.0	84.8	84.6	84.5	84.4	84.1	83.9
9.5	2.0	10.7	84.9	84.7	84.5	84.3	84.2	84.0	83.8
12.1	2.5	10.4	84.8	84.6	84.4	84.2	84.1	83.9	83.7
15.0	3.0	10.1	84.7	84.5	84.2	84.1	84.0	83.8	83.5
18.0	3.5	9.8	84.6	84.4	84.1	84.0	83.9	83.6	83.4
21.1	4.0	9.6	84.5	84.2	84.0	83.8	83.7	83.5	83.2
24.5	4.5	9.3	84.3	84.1	83.8	83.7	83.6	83.3	83.1
28.1	5.0	9.0	84.2	83.9	83.7	83.5	83.4	83.2	82.9
31.9	5.5	8.7	84.1	83.8	83.5	83.4	83.3	83.0	82.7
35.9	6.0	8.4	83.9	83.6	83.3	83.2	83.1	82.8	82.5
40.3	6.5	8.2	83.7	83.4	83.2	83.0	82.9	82.6	82.3
44.9	7.0	7.9	83.5	83.3	83.0	82.8	82.7	82.4	82.1
49.9	7.5	7.6	83.4	83.1	82.8	82.6	82.5	82.2	81.9
55.3	8.0	7.3	83.1	82.8	82.5	82.3	82.2	81.9	81.6
61.1	8.5	7.0	82.9	82.6	82.3	82.1	82.0	81.6	81.3
67.3	9.0	6.7	82.7	82.3	82.0	81.8	81.7	81.4	81.0
74.2	9.5	6.5	82.4	82.1	81.7	81.5	81.4	81.0	80.7
81.6	10.0	6.2	82.1	81.8	81.4	81.2	81.1	80.7	80.3
89.8	10.5	5.9	81.8	81.4	81.1	80.9	80.7	80.3	79.9
98.7	11.0	5.6	81.5	81.1	80.7	80.5	80.3	79.9	79.5
108.7	11.5	5.3	81.1	80.7	80.3	80.1	79.7	79.4	79.0
119.7	12.0	5.1	80.6	80.2	79.8	79.4	79.4	78.9	78.5

Economizers use heat from moderately low temperature combustion gases after the gases leave the steam generating section (or in many cases also after going through a superheating segment) to preheat feed water. Economizers are heating the feed water after it is received from the water feed pumps, so the water arrives at a higher temperature into a steam generating area. A typical design uses steel tubes where the water is fed at pressures higher than the pressure in the steam generation part. The feed rate has to correspond to the steam output of the boiler. Exhibit 7.4 shows the effect of pre-heating of the feed water on the efficiency of a boiler unit.

Notes

Exhibit 7.3: Effect of Scale Thickness in Boilers on Heat Transfer

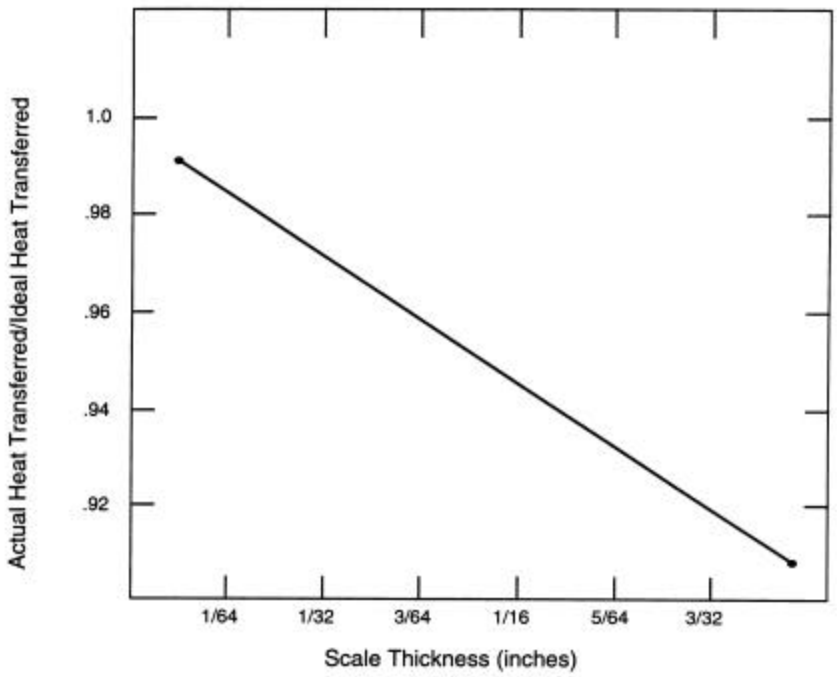

Exhibit 7.4: Effect of Feed Water Preheat on Boiler System Efficiency

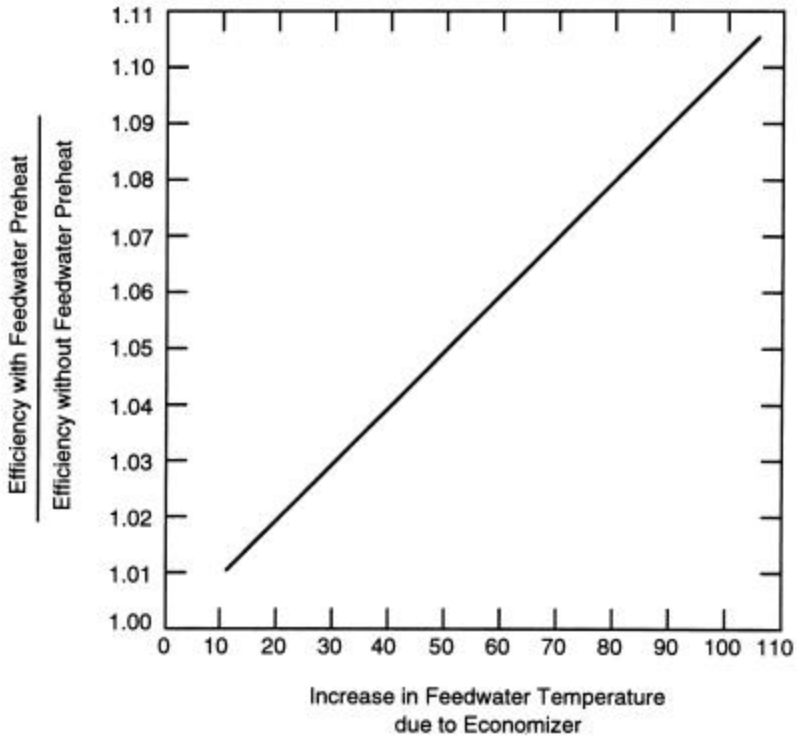

Notes

Although blowdowns are an absolute necessity for the operation of a boiler, it is important that one realizes that, depending on the pressure, each blowdown decreases the efficiency of the boiler. Exhibit 7.5 illustrates the decrease in efficiency where the percent blowdown is calculated as follows:

$$\frac{\dot{M}_{\text{Blowdown}}}{\dot{M}_{\text{Steam Produced}}} \times 100$$

Note how sharply the efficiency loss increases with higher pressures.

Exhibit 7.5: Efficiency Loss Due to Blowdown

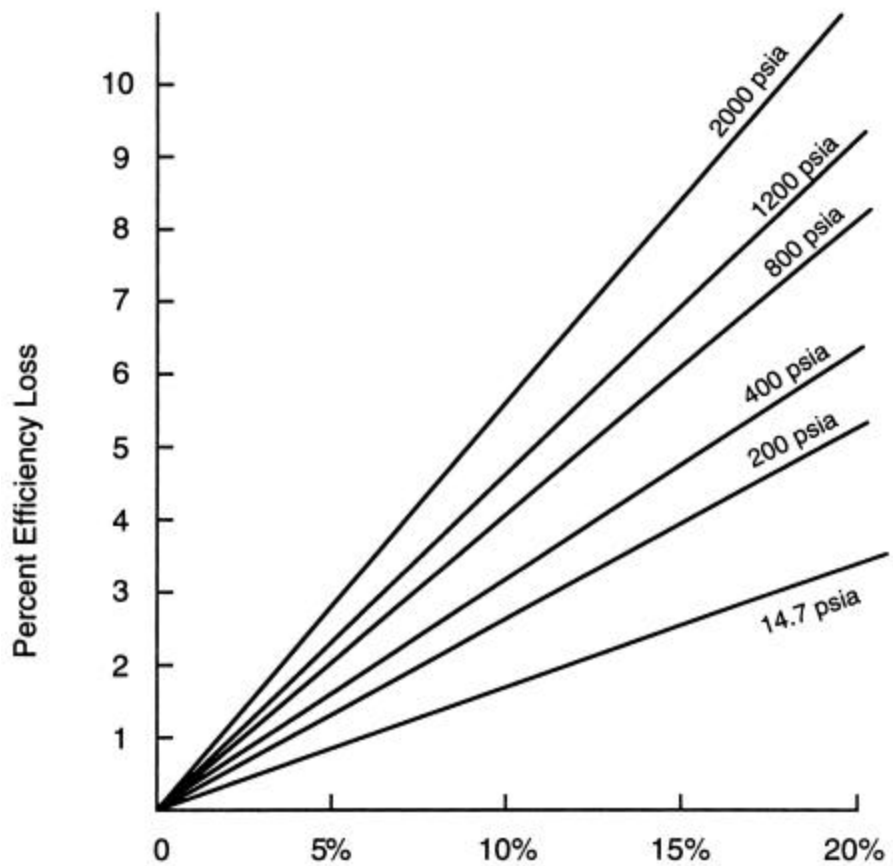

7.1.1.2 Combustion in Boilers

Heat is released through a process called "combustion" (burning). Combustion is a release of heat energy through the process of oxidation. The methods used to extract heat are combustion of carbon based fuels or heat generated by electric current.

To make the combustion happen a mixture of fuel, oxygen and heat is necessary. During the process of combustion, elements of fuel mix with oxygen and reconfigure to form new combinations of the same elements. The result is heat, light and new element combinations. The goal is to maximize heat and that can happen when the combustion process is tightly controlled.

Complete Combustion:

Carbon	Oxygen		Water
+		=	CO_2
Hydrogen	Nitrogen		Nitrogen

Notes

Incomplete Combustion:

Carbon		Oxygen		Soot + Aldehydes
	+		=	Water
Hydrogen		Nitrogen		CO_2
				CO
				Nitrogen

Perfect combustion (referred to as stoichiometric combustion) is the process of burning the fuel without an excess of combustion air. This process should develop the "ULTIMATE CO_2" (see Exhibit 7.6).

Exhibit 7.6: Ultimate CO_2 Values

Fuel	CO_2 %
Natural Gas (can vary)	11.7-12.1%
Propane	13.7%
No.2 Oil	15.2%
No.4 Oil	16.0%

While these values can be sometimes achieved, Exhibit 7.7: Boiler Combustion Mixtures shows more realistic desired values.

Exhibit 7.7: Boiler Combustion Mixtures

Fuel	CO_2	O_2	Excess Air
Natural Gas	10.5%	3.5-4.0%	20%
Propane	11.5-12.0%	3.5-4.0%	20%
No.2 Oil	11.5-12.0%	3.5-4.0%	20%
No.4 Oil	12.5-13.0%	3.5-4.0%	20%

Carbon, in burning to carbon monoxide, gives off only about one third of the available heat. A one eighth inch coating of soot on the heat exchanger increases fuel consumption by over 8% as a rule of thumb. Incomplete combustion that results in the formation of CO is dangerous because it is odorless, colorless, tasteless, and contrary to popular belief, it is non-irritating. The gas is also lighter than air and consequently, if it is escaping from a plugged or leaking boiler fireside, can rise to occupied areas. CO can only be detected with special test or monitoring equipment.

Causes of Incomplete Combustion

1. Insufficient or too much oxygen
   - Air problems (rule of thumb - 1 cubic foot of air for every 100 Btus of gross heating value).
   - Minimum air intake openings for a given input.

     Oil - unconfined = 28 square inches per gallon

     Confined = 140 square inches per gallon

     Gas - draft hood = 1 square inch per 5,000 Btu

     Barometric = 1 square inch per 14,000 Btu

     Direct = 1 square inch per 17,500 Btu
2. Insufficient or too much fuel

Notes

- Fuel is not vaporized - possible reasons

  Worn nozzle

  Clogged nozzle

  Pump pressure is incorrect

  Pump, lines, filter or tank lines are clogged

  Cold fuel

- Water in fuel - possible causes

  Supplier doesn't supply quality fuel

  Tank is located outside

  Cover the fill opening and vent to protect from rain

3. Insufficient or inconsistent heat

   - The ignition system is used to provide the proper temperature (called kindling point) for the light off of the vaporized fuel under design conditions. When design conditions are not met, light off will not occur.
   - An established flame is usually sufficient to maintain the kindling point. However, anytime the combustion temperature falls below the kindling point, the combustion triangle is broken and combustion stops. A safety device will shut the fuel off within 3 seconds of flame failure.

Calculating Combustion Efficiency

The calculation of combustion efficiency is based upon three factors.

1. Chemistry of the fuel
2. Net temperature of the stack gases
3. The percentage of oxygen or carbon dioxide by volume in the stack gases

Eyeballing the flame for color, shape and stability is not enough for maximizing efficiency. Commercial analyzers are available to accurately gauge combustion efficiency. The simplest units measure only O_2 or CO_2. Exhibit 7.8 lists efficiencies for common heat generation devices.

Exhibit 7.8: Combustion Efficiencies

Process Type	Efficiency [%]
Fireplace	10-30
Space Heater	50-82
Commercial Atmospheric Gas Boiler	70-82
Oil Power Burner	73-85
Gas Power Burner	75-83
Condensing Furnace (Gas or Oil)	85-93

There are no standard performance efficiency levels that commercial boiler manufacturers must adhere to. Efficiency is reported in different terms:

- Thermal Efficiency – A measure of effectiveness of the heat exchanger that does not account for radiation and convection losses.

Notes

- Fuel to Steam Efficiency - A measure of the overall efficiency of the boiler accounting for radiation and convection losses.
- Boiler Efficiency – Refers to either thermal efficiency or Fuel to Steam Efficiency.

Installation of controllers such as a temperature setback device can result in savings of up to 18% of annual heating costs. A controller can sense the inside or outside temperature, or both. Controllers manage the boiler cycling and/or control valves based upon the ratio of the two temperatures and the rate of change of each. Burner controls maximize the burner's efficiency. One way this can be done is by using two-stage (high-low) burners. Another possibility is the utilization of higher voltage electronic ignition that improves light off and consequently reduces associated soot accumulation. Employment of interrupted ignition reduces the run time of ignition components by approximately 98% during heating season increasing ignition component life.

7.1.2 Typical Performance Improvements

Some performance improvements are easily achieved and many of which are proper maintenance or operation procedures. This section covers a few of the more common ones.

7.1.2.1 Adjustment of Fuel and Air Ratio

For each fuel type, there is an optimum value for the air/fuel ratio. The air/fuel ratio is the ratio of combustion air to fuel supplied to the burner. For natural gas boilers, this is 10% excess air, which corresponds to 2.2% oxygen in the flue gas. For coal-fired boilers, the values are 20% excess air and 4% oxygen. Because it is difficult to reach and maintain these values in most boilers, it is recommended that the boiler air/fuel ratio be adjusted to give a reading of 3% oxygen in the flue gas (about 15% excess air) for gas-fired boilers and 4.5% (25% excess air) for coal-fired boilers. For natural gas boilers, the efficiency is a function of excess/deficient air and stack temperature. The curves for oil and coal-fired boilers are similar. Because the efficiency decreases rapidly with deficient air, it is better to have a slight amount of excess air. Also, the efficiency decreases as the stack gas temperature increases. As a rule of thumb, the stack temperature should be 50° to 100°F above the temperature of the heated fluid for maximum boiler efficiency and to prevent condensation from occurring in the stack gases. It is not uncommon that as loads on the boiler change and as the boiler ages, the air/fuel ratio will need readjusting. It is recommended that the air/fuel ratio be checked as often as monthly. Combustion analyzers are available for less than $1,000, and it is often recommended that these be purchased. Case studies illustrating this opportunity can be found in Appendix E.

Exhibit 7.9 illustrates the average cost savings from implementation of this opportunity.

Exhibit 7.9: Air/Fuel Ratio Reset: Costs and Benefits

Options[1]	Installed Costs ($)[2]	Energy Savings (MMBtu/yr)	Cost Savings ($/yr)[3]	Simple Payback (yr)
Air/Fuel Ratio Reset	1,673	2,339	5,691	0.3

1. Tabulated data were taken from the Industrial Assessment Center (IAC) database. All values are averages based on the database data. The implementation rate for this measure was 70%.
2. One example from the IAC database to further clarify the costs is as follows: Adjusting the air/fuel ratio on a 6.3 MMBtu/hr boiler at a concrete plant resulted in energy and cost savings of 1,814 MMBtu/yr and $4,760/yr. The implementation cost was $1,500, which was the cost for flue gas analysis equipment and labor.
3. The energy cost savings are based on proposed dollar savings as reported to IAC from the center, which are usually almost identical to actual savings reported from the facility.

Notes

7.1.2.2 Elimination of Steam Leaks

Significant savings can be realized by locating and repairing leaks in live steam lines and in condensate return lines. Leaks in the steam lines allow steam to be wasted, resulting in higher steam production requirements from the boiler to meet the system needs. Condensate return lines that are leaky return less condensate to the boiler, increasing the quantity of required make-up water. Because make-up water is cooler than condensate return water, more energy would be required to heat the boiler feed water. Water treatment would also increase as the make-up water quantity increased. Leaks most often occur at the fittings in the steam and condensate pipe systems. Savings for this measure depend on the boiler efficiency, the annual hours during which the leaks occur, the boiler operating pressure, and the enthalpies of the steam and boiler feed water where enthalpy is a measure of the energy content the steam and feed water.

Exhibit 7.10 lists average cost savings and energy conservation from implementation of this opportunity.

Exhibit 7.10: Steam Leak Repair: Costs and Benefits

Options[1]	Installed Costs ($)[2]	Energy Savings (MMBtu/yr)	Cost Savings ($/yr)[3]	Simple Payback (yr)
Steam Leak Repair	873	1,628	5,548	0.2

1. Tabulated data were taken from the Industrial Assessment Center (IAC) database. All values are averages based on the database data.
2. The implementation rate for this measure was 81%.One example from the IAC database to further clarify the costs is as follows: Repairing steam leaks on a 600 hp boiler system at a rendering plant resulted in energy and cost savings of 986 MMBtu/yr and $4,535/yr. The implementation cost was $350.
3. The energy cost savings are based on proposed dollar savings as reported to IAC from the center, which are usually almost identical to actual savings reported from the facility.

7.1.2.3 Variable Frequency Drives for Combustion Air Blowers

The load on a boiler typically varies with time, and, consequently, the boiler firing-rate varies between low and high fire. The amount of combustion air required changes accordingly. Common practice has been to control a damper or vary the positions of the inlet vanes in order to control the airflow; that is, when inlet air is required the damper is essentially closed and opened as more air is required. This is an inefficient method of airflow control because air is drawn against a partially closed damper whenever the maximum amount of combustion air is not required. It is much more efficient to vary the speed of the blower by installing a variable-frequency drive on a blower motor (note that it is sometimes expensive to install a variable-frequency drive if inlet vanes exist). Because the power required to move the air is approximately proportional to the cube of the airflow rate, decreasing the flow rate by a factor of two will result in a reduction of power by a factor of eight. This measure is particularly significant on boilers of 3.3 MMBtu/h or greater.

Combustion air blower variable-frequency drives are available from boiler manufacturers for new boiler installation. They also may be retrofitted to an existing boiler with few changes to the boiler. Exhibit 7.11 presents average cost savings and energy conservation from implementation of this opportunity.

Exhibit 7.11: (ASD) - Variable-Frequency Drives: Costs and Benefits

Options[1]	Installed Costs ($)[2]	Energy Savings (MMBtu/yr)	Cost Savings ($/yr)[3]	Simple Payback (yr)
Combustion Air Blower Variable-Frequency Drives	23,967	1,115	13,789	1.7

Notes

1. Tabulated data were taken from the Industrial Assessment Center (IAC) database. All values are averages based on the database data. The implementation rate for this measure was 33%.
2. One example from the IAC database to further clarify the costs is as follows: Installing variable speed drives and corresponding controls on two 250 hp combustion air fans at a food processing plant resulted in energy and cost savings of 488,445 MMBtu/yr and $28,000/yr. The implementation cost was $80,000.
3. The energy cost savings are based on proposed dollar savings as reported to IAC from the center, which are usually almost identical to actual savings reported from the facility.

7.1.2.4 Maintenance of Steam Traps

A steam trap holds steam in the steam coil until the steam gives up its latent heat and condenses. In a flash tank system without a steam trap (or a malfunctioning trap), the steam in the process heating coil would have a shorter residence time and not completely condense. The uncondensed high-quality steam would be then lost out of the steam discharge pipe on the flash tank. Steam trap operation can be easily checked by comparing the temperature on each side of the trap. If the trap is working properly, there will be a large temperature difference between the two sides of the trap. A clear sign that a trap is not working is the presence of steam downstream of the trap. Non-working steam traps allow steam to be wasted, resulting in higher steam production requirement from the boiler to meet the system needs. It is not uncommon that, over time, steam traps wear and no longer function properly. Exhibit 7.12 lists average cost savings and energy conservation from implementation of this opportunity.

Exhibit 7.12: Steam Trap Repair: Costs and Benefits

Options[1]	Installed Costs ($)[2]	Energy Savings (MMBtu/yr)	Cost Savings ($/yr)[3]	Simple Payback (yr)
Steam Trap Repair	2,560	5,431	14,885	0.17

1. Tabulated data were taken from the Industrial Assessment Center (IAC) database. All values are averages based on the database data. The implementation rate for this measure was 79%.
2. One example from the IAC database to further clarify the costs is as follows: Repairing one steam trap resulted in energy and cost savings of 105 MMBtu/yr and $483/yr on a 600 hp boiler at a rendering plant. The implementation cost was $220.
3. The energy cost savings are based on proposed dollar savings as reported to IAC from the center, which are usually almost identical to actual savings reported from the facility.

7.1.2.5 High Pressure Condensate Return Systems

As steam looses it's heat content is condenses into hot water called condensate. A sudden reduction in the pressure of a pressurized condensate will cause the condensate to change phase into steam, more commonly called flashing. Flash tanks are often designed into a pressurized return system to allow flashing and to remove non-condensable gases from the steam. The resulting low-pressure steam in the flash tank can often be used as a heat source.

A more efficient alternative is to return the pressurized condensate directly to the boiler through a high-pressure condensate return system. Heat losses due to flashing are significant, especially for high-pressure steam systems. Steam lost due to flashing must be replaced by water from the city mains (at approximately 55°F). This causes the feed water mixture to the boiler to be significantly below its boiling point, resulting in higher fuel consumption by the boiler. Water treatment costs are also greater with increased flash losses. In a retrofit application, a closed, high-pressure condensate return system would prevent the flashing that occurs in the existing system by returning the condensate to the boiler at a higher pressure and temperature, thereby reducing boiler energy requirements and water treatment costs.

Non-condensable gases (such as air and those formed from the decomposition of carbonates in the boiler feed water treatment chemicals) can be removed from a closed condensate return system through the

Notes

use of variable orifice discharge modules (VODMs). VODMs are similar to steam traps in that they return condensate but also can remove non-condensable gases. In a system that does not contain VODMS, these gases can remain in the steam coil of the equipment being heated and can form pockets of gas that have the effect of insulating the heat transfer surfaces, thus reducing heat transfer and decreasing boiler efficiency. Exhibit 7.13 lists average cost savings from installation of a condensate return system.

Exhibit 7.13: Condensate Return Systems: Costs and Benefits

Options[1]	Installed Costs ($)[2]	Energy Savings (MMBtu/yr)	Cost Savings ($/yr)[3]	Simple Payback (yr)
High Pressure Condensate Return	6,931	9,688	12,738	0.5

1. Tabulated data were taken from the Industrial Assessment Center (IAC) database. All values are averages based on the database data. The implementation rate for this measure was 59%.
2. One example from the IAC database to further clarify the costs is as follows: Installing of high-pressure condensate return system equipment at food processing plant resulted in energy and cost savings of 4,727 MMBtu/yr and $14,100/yr. The implementation cost was $37,000.
3. The energy cost savings are based on proposed dollar savings as reported to IAC from the center, which are usually almost identical to actual savings reported from the facility.

7.2 Heat Recovery Systems

Heat recovery systems are installed to make use of some of the energy which otherwise would be lost into the surroundings. The systems use a hot media leaving the process to preheat other, or sometimes the same, media entering the process. Thus energy otherwise lost does useful work.

7.2.1 General Considerations

The first step in heat recovery analysis is to survey the plant and take readings of all recoverable energy that is being discharged into the atmosphere. The survey should include analysis of the following conditions:

- Exhaust stack temperatures
- Flow rates through equipment
- Particulates and corrosives of condensable vapors in the air stream

Ventilation, process exhaust and combustion equipment exhaust are the major sources of recoverable energy. Exhibit 7.14 illustrates typical energy savings achieved by preheating combustion air with hot exhaust gases from process or furnaces.

Regardless of the amount or temperature of the energy discharged, recovery is impractical unless the heat can be effectively used somewhere else. Also, the recovered heat must be available when it is needed.

Waste heat recovery systems can be adapted to several applications including:

- Space heating
- Make-up air heating
- Water heating
- Process heating
- Combustion air preheating
- Boiler feed water preheating
- Process cooling or absorption air conditioning

Notes

Exhibit 7.14: Fuel Savings Realized by Preheating Combustion Air

Furnace Outlet	Combustion air preheat temperature, °F									
Temp. °F	400	500	600	700	800	900	1000	1100	1200	1300
2600	22	26	30	34	37	40	43	46	48	50
2500	20	24	28	32	35	38	41	43	45	48
2400	18	22	26	30	33	36	38	41	43	45
2300	17	21	24	28	31	34	36	39	41	43
2200	21	20	23	26	29	32	34	37	39	41
2100	16	18	22	25	28	30	33	35	37	39
2000	15	17	20	23	26	29	31	33	36	38
1900	14	16	19	22	25	27	30	32	34	36
1800	13	16	19	21	24	26	29	31	33	35
1700	13	15	18	20	23	25	27	30	32	33
1600	12	14	17	19	22	24	26	28	30	32
1500	11	14	16	19	21	23	25	27	29	31
1400	10	13	16	18	20	22	25	27	28	30

Note: 1. Numbers represent fuel savings in percent.

2. Natural gas with 10% excess air. Other charts are available for different fuels and various amount of excess air

7.2.2 Types of Heat Recovery Equipment

Choosing the type of heat recovery device for a particular application depends on a number of factors. For example air-to-air equipment is the most practical choice if the point of recovery and use are closely coupled. Air-to-liquid equipment is the logical choice if longer distances between the heat source and heat requirements are involved. Included in this section are five types of heat recovery systems:

- Economizers
- Heat pipes
- Shell and tube heat exchangers
- Regenerative units
- Recuperators

7.2.2.1 Economizers

Economizers are air-to-liquid heat exchangers. Their primary application is to preheat boiler feed water. They may also be used to heat process or domestic water, or to provide hot liquids for space heating or make-up air heating equipment. The basic operation is as follows: Sensible heat is transferred from the flue gases to the de-aerated feed water as the liquid flows through a series of tubes in the economizer located in the exhaust stack.

Most economizers have finned tube heat exchangers constructed of stainless steel while the inlet and outlet ducts are carbon steel lined with suitable insulation. The maximum recommended waste gas temperature for standard units is around 1,800°F. According to economizer manufacturers, fuel consumption is reduced approximately 1% for each 40°F reduction in flue gas temperature. The higher the flue gas temperature is, the greater potential for energy savings.

Notes

7.2.2.2 Heat Pipes

The heat pipe thermal recovery unit is a counterflow air-to-air heat exchanger. Hot air is passed through one side of the heat exchanger and cold air is passed through the other side in the opposite direction. Heat pipes are usually applied to process equipment in which discharge temperatures are between 150 and 850 °F. There are three general classes of application for heat pipes:

1. Recycling heat from a process back into a process (process-to-process)
2. Recycling heat from a process for comfort and make-up air heating (process-to-comfort)
3. Conditioning make-up air to a building (comfort-to-comfort)

Heat pipes recover between 60 to 80% of the sensible heat between the two air streams. A wide range of sizes is available, capable of handling 500 to 20,000 cubic feet of air per minute. The main advantages of the heat pipe are:

- No cross-contamination
- Operates without external power
- Operates without moving parts
- Occupies a minimum of space

7.2.2.3 Shell and Tube Heat Exchangers

Shell and tube heat exchangers are liquid-to-liquid heat transfer devices. Their primary application is to preheat domestic water for toilets and showers or to provide heated water for space heating or process purposes.

The shell and tube heat exchanger is usually applied to a furnace process cooling water system, and is capable of producing hot water approaching 5 to 10°F of the water temperature off the furnace. To determine the heat transfer capacity of the heat exchanger the following conditions of the operation must be known:

1. The amount of water to be heated in gallons per hour
2. The amount of hot process water available in gallons per hour
3. Inlet water temperature and final water temperature desired
4. Inlet process water temperature

7.2.2.4 Regenerative Unit (Heat Wheel)

The heat wheel is a rotary air-to-air energy exchanger which is installed between the exhaust and supply air duct work in a make-up or air heating system. It recovers 70 to 90% of the total heat from the exhaust air stream. Glass fiber ceramic heat recovery wheels can be utilized for preheating combustion air with exhaust flue gas as high as 2,000°F. Heat wheels consist of a rotating wheel, drive mechanism, partitions, frames, air seals and purge section. Regeneration is continuous as the wheel rotates through the hot section picking up energy that is then stored and transferred to the cooler air in the supply section.

7.2.2.5 Recuperators

Recuperators are air-to-air heat exchangers built to provide efficient transfer of heat from hot exhaust gases to cooler air stream. Recuperators are generally used in the following processes:

- Preheating combustion air
- Preheating material that has to be heated in the process
- Recovery heat from hot gas to supplement or replace the primary heat source in process or comfort heating applications

Notes

There are many different types of recuperator designs available today. The recuperator described below is primarily used for combustion air preheating.

It consists of three basic cylinders, the hot gases flow up through the inner cylinder, cold combustion air enters at the bottom of the outer cylinder, flows upward and down through the middle cylinder, exiting from the bottom of the middle cylinder. Heat energy from exhaust gases is transferred through the inner cylinder wall to the combustion air by a combination of conduction and radiation heat transfer. The net effect is preheated air temperature as high as 1,000°F with inlet exhaust gases entering at

7.3 HEATING SYSTEMS

Heating systems are an integral part of industry today. They are used for process heating, drying, and comfort/space heating. The main purpose of industrial space heating is to provide comfortable conditions for the people working in these areas but also for purposes such as storage of goods or providing a controlled environment for sensitive equipment.

The objective of heating is to produce a steady, balanced environment regardless of the outside conditions. The type of clothing worn and the additional heat sources such as process waste heat must also be considered when implementing a system. Conservation of energy in heating means getting the most efficient use from energy while consuming as little as possible. Energy can be conserved by filling gaps and properly insulating, thus reducing building heat loss. Avoiding overheating practices such as heating a building when it is unoccupied can also save in energy costs.

The existing industrial heating systems are for the most part inefficient, dated and are often the principal consumers of energy. The most widely used system is the conventional convection heater that is highly inefficient and consumes large amounts of energy. Convection heaters use the circulation of steam or high-pressure hot water in order to generate space heat. Inefficiencies can be attributed to the fact that much energy is lost in heating the space, or the medium, surrounding the object. It then relies on convection between the medium and the surface of the object to increase the temperature, or create warmth.

Another dilemma associated with space heating involves the loss of heat due to stratification. Most systems are designed to heat an area in order to maintain a desired temperature. Energy is wasted because a majority of the heat is either lost to infiltration and ventilation or eventually rises to the ceiling level requiring more energy to keep the working level heated. There are several energy conservation opportunities that can be applied to these operations to reduce the use of energy. This section describes these measures, namely destratification fans and radiant heating systems, and how they can be applied in industry.

7.3.1 Destratification Fans

Destratification fans are used to destratify air in buildings. Stratification is a result of an increasing air temperature gradient between the floor and the ceiling in an enclosed area, usually due to stagnant air. When there is insufficient air movement, the hot air will rise to the ceiling, resulting in warmer temperatures in the upper portion of the area and cooler air temperatures at the working level near the floor. An example of stratification is shown in Exhibit 7.15(a). If stratification is present, the heating requirements of the facility are increased because the heating system is continually working to maintain the thermostat setpoint temperature. The thermostat setpoint operates according to the temperature at the working level. Much effort is required to make up for the heat the working level loses due to this physical occurrence. The destratification process initiates the movement of the air, creating a more uniform temperature distribution within the enclosed space. The air temperature at the floor level becomes nearly equal to the air temperature at the ceiling thus reducing the amount of energy needed to heat the facility. The amount of heat lost to ventilation and infiltration is also reduced due to the overall reduction in heat being generated.

7.3.1.1 Ceiling Fans

The basic function in destratification is to pull the air from the ceiling level down to the floor level and allow it to mix with the cooler air and increase the temperature at the working level. This benefits the

Notes

comfort of the workers and also reduces the energy use of the facility. This process can be accomplished by two different means. The first and most common device used is the ceiling fan. The fan draws the air from above the fan and forces it downward by the power of the specific motor and blade combination. The resulting motion is an air plume, with the warm air moving downward and outward and essentially creating a mixture like the one shown in Exhibit 7.15(b). The total air volume and coverage is dependent on the motor size, height of the fan and the specifications of the fan blade (design, size, rpm). Ceiling fans are also applicable in cooling conditions. It creates motion in the air and this can assist with evaporative cooling of the skin surface.

The total number of fans needed in a facility can be determined by the following equation.

$$\frac{\text{Total Plant Area}}{\text{Fan Coverage Area}} = \text{Number Fans Needed}$$

The fan coverage area depends on the type and size of fan used and this information can usually be obtained from the fan manufacturer. Placement of the fans is also important. The simplest method of determining placement is to calculate the distance between each fan. This can be accomplished by using the following equation.

$$\text{Distance} = \sqrt{\text{Fan Coverage Area}}$$

Corner fans should be placed half this distance from each wall and consecutive fans should be placed this distance apart to obtain maximum coverage. Obstacles such as stacked merchandise or office partitions should be taken into consideration when choosing and placing fans.

7.3.1.2 Ducting

Another option for destratifying the air is to install a hanging device that uses a fan to pull the warm air from the ceiling, sends it downward through a duct/tube and redistributes the air at the floor level as shown in Exhibit 7.15(c). This device has advantages and disadvantages. It aids in the destratification process and creates a more uniform temperature distribution without creating disturbing drafts. It is also simple to install and can easily be relocated throughout the building. On the other hand, these devices may be a bit cumbersome and unsightly. They extend from the ceiling down to the floor and create additional obstacles for the workers and may not be appropriate for some areas of the plant. These devices also do not possess the cooling applications of the ceiling fans.

Exhibit 7.15: Stratification and Destratification of Air

a) Stratification air pattern, (b) Destratification air pattern using a ceiling fan,

(c) Destratification air pattern using ducting

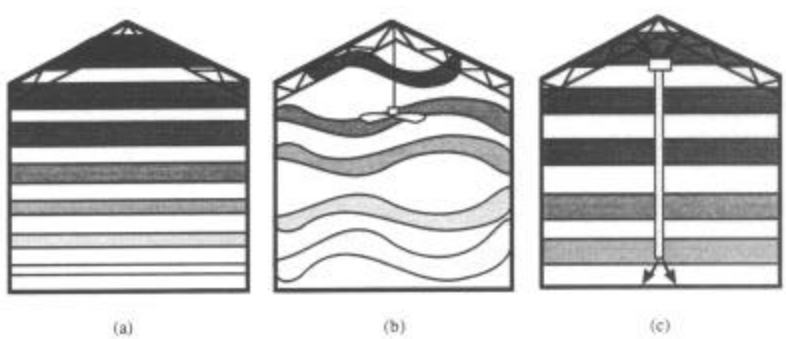

7.3.2 Electric Heating

Electrical resistance heating is often inexpensive and convenient to install. However, electric energy costs at least twice as much as other sources of heat, such as steam or natural gas, although greater efficiency in use may partially offset this difference. Before a decision is made to heat with electricity, the

Notes

savings these alternative sources can produce should be evaluated in relation to the cost to install them. For example, consider the replacement of a 500,000-Btu-per hour electric heater with a 500,00-Btu-per-hour natural gas heater.

Annual Cost of Electric Heater

= 500,000 Btu/hr x $\$14.65/10^6$ Btu x 80% Eff. - 6,000 hrs/yr = $35,200

Annual Cost of Natural Gas Heater

= 500,000 Btu/hr x $\$3.00/10^6$ Btu x 50% Eff. x 6,000 hrs/yr = $4,500

The energy cost saving is = $35,200 - $4,500 = $30,700/yr

7.3.2.1 Radiant Heaters

Radiant heaters are used for heating spaces by converting electric or gas energy to heat. It is important to think thoroughly about the whole picture before recommending radiant heaters because considered in isolation they probably would not be economically viable.

When dealing with the use of energy for the purpose of heating sometimes it is better to deal directly with the source of the problem. Convection heaters are inefficient heating devices in that energy is wasted in heating the space and using that heated air to convectively warm the people and/or objects within that space. Radiant heaters take a different approach. Radiant heaters operate similar to the sun. Radiant energy is transferred at the speed of light as electromagnetic waves. The heaters emit infrared radiation that is absorbed by the people/objects that it strikes, which elevates the temperature of the body, but does not heat the air through which it travels.

7.3.2.2 Types of Radiant Systems

Radiant heating systems can be gas-fired or electric. The type of radiant heating system used is determined by the sources available. For example, electric radiant heating systems may be installed in an area of the building where gas is unavailable even though natural gas is more cost effective than electricity. The efficiencies for both electric and gas systems are approximately the same but natural gas infrared systems have a longer lifetime. A radiant heating system is often a relatively easy retrofit measure but may also be integrated into new construction. Radiant heaters come in different sizes, styles and shapes according to their application. Exhibit 7.16 shows a typical example of a radiant heater.

In relation to equipment performance, radiant sources can be categorized into three groups. A low temperature system has source temperatures up to 300°F and would typically be used as a floor or ceiling heater. A low-intensity system has sources up to 1200°F. A medium-intensity system has temperatures up to 1800°F and would typically include a porous matrix unit. High-intensity systems have source temperatures up to 5000°F and usually consist of an electrical reflector lamp and high temperature resistors. Low-temperature heating systems are usually used in residential and perimeter heating applications such as schools, offices, and airports. These systems are often incorporated directly into the building structure. Low-, medium-, and high-intensity systems have more industrial and commercial uses and are usually assembled units that are installed into existing structures.

7.3.2.3 Applications

Use of radiant systems is ideal for comfort heating. Since the infrared radiation elevates body temperature without heating the air through which it travels, the same degree of comfort provided by the convection heaters can be maintained at lower indoor air temperatures with radiant heaters. This measure also eliminates the problem of stratification. It is beneficial to use these heaters in spaces where the ceilings are high and stratification is prominent. It is also very practical for areas that are frequently exposed to the outside air such as loading dock areas. Radiant spot heating helps workers to maintain a comfortable working temperature even though the space air may be cold. Radiant heat, unlike convection, does not require a medium to travel through and thus has a much higher heat transfer rate. An advantage of this is its short response time. The person or object will feel the effects of the system shortly after it is engaged. The rate of energy transfer is dependent upon many different factors including temperature, emissivity, reflectivity, absorptivity and transmissivity. Emissivity is a radiative property that indicates how efficiently the surface emits compared to an ideal radiator and its value ranges between 0 and 1. Reflectivity,

Notes

absorptivity, and transmissivity are the fractions of incidental radiation reflected, absorbed, and transmitted, respectively.

Exhibit 7.16: Infrared Radiant Heater

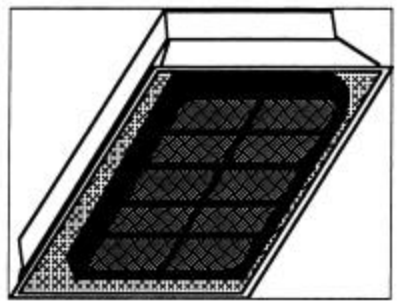

Radiant systems can also replace conventional heating methods in process heating. Since radiation does not need to travel through a medium, more heating work can be accomplished in less space. The response time when compared with convection heaters can prove to be an advantage in these industrial applications. The shutdown time for an infrared burner varies from one to 30 seconds. Gas or electric radiant heaters may be used for different heating applications. Applications include cooking, broiling, melting and curing metals, curing and drying rubber and plastics, and preshrinking and finishing of textiles.

7.4 FURNACES AND BURNERS

Furnaces and burners are devices designed to release energy of one form (hydrocarbon bonds) and convert it into heat. The energy is typically released from gas or oil fuels through a combustion process. What type of burner or furnace to use and what is the most efficient way of operation highly depends on the process where it is used. There is always more than one way of solving an engineering problem, however: in some industries years of research and study of the processes involved might lean toward one recognized approach and therefore define quite narrowly the equipment best suited. It is obvious that one has to be careful not to recommend a change of a furnace without knowing the reason why the old seemingly inefficient one is used.

7.4.1 Burner Combustion Efficiency

Conserving fuel in heating operations such as melting or heat treating is a complex operation. It requires careful attention to the following:

- Refractories and insulation
- Scheduling and operating procedures
- Preventative maintenance
- Burners
- Temperature controls
- Combustion controls

Providing the correct combustion controls will increase combustion efficiency measurably. Complete combustion of natural gas yields carbon dioxide and water vapor. If gas is burned with out the correct amount of air, an analysis of the products of combustion will show it contains about 11-12% CO_2 and 20-22% water vapor. The remainder is nitrogen, which was present in the air and passed through the combustion reaction essentially unchanged.

If the same sample of natural gas is burned with less than the correct amount of air ("rich" or "reducing fire"), flue gas analysis will show the presence of hydrogen and carbon monoxide, products of incomplete combustion. Both of these gases have fuel value, so exhausting them from furnaces is a waste of fuel (see Exhibit 7.17).

If more than the required amount of air is used (lean or oxidizing flame), all the gas will be burnt but the products of combustion will contain excess oxygen. This excess oxygen is an added burden on the

Notes

combustion system - it is heated and then thrown away thereby wasting fuel. The following steps should be taken to upgrade burner and combustion controls to prevent these situations:

1. Use sealed burners. Make all combustion air go through the burner - open cage type burners are very inefficient.
2. Use power burners. Inspirator or atmosphere burners have very poor mixing efficiency at low inputs, especially for low pressure natural gas.
3. Install a fuel/air ratio control system.

Exhibit 7.17: Percent Excess Air From CO_2 Reading

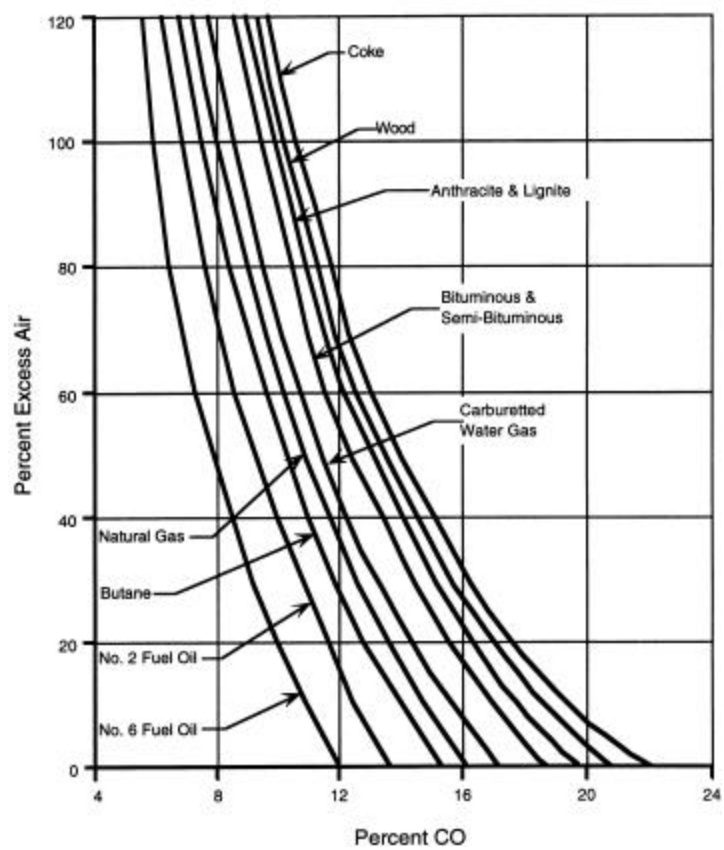

7.4.2 Premix Burner Systems

Premix burner systems commonly use a venturi mixer known as an aspirator or proportional mixer. Air from the blower passes through the venturi, creating suction on the gas line, and the amount of gas drawn into the mixer drops in proportion to airflow. Aspirator systems are fairly simple to adjust and maintain accurate air/fuel ratios over wide turndown ranges, but their use is limited to premix burners.

7.4.3 Nozzle Mix Burners

Nozzle mix burners used with a Ratio Regular system is widely used for industrial furnace applications. Orifices are installed in the gas and air lines to a burner and then adjusted so that air and gas are in correct burning proportions when pressure drops across the orifices are equal. Once the orifices are set, they will hold the correct air/gas ratio as long as the pressure drop remains the same, no matter what firing rate. Ratio Regular systems have good accuracy and are fairly easy to adjust.

On large furnaces where fuel consumption is extremely high, or on furnaces where very close control of the atmosphere is required, extremely accurate air/fuel ratio control is vital, both for fuel economy and product quality. On these installations hydraulic or electronic flow controls are often used.

Notes

These systems feature fixed orifices in both gas and air streams, and these orifices are sized to pass proportional amounts of gas and air at equal pressure drops, pressure drop signals are fed to a ratio controller which compares them. One of the outstanding features of this system is that the air/fuel ratio can be adjusted by turning a dial. Since a burner can be thrown off correct gas ratios by changes in ambient air temperature and humidity, this ratio adjustment feature permits the operator to set the burner back to peak operating efficiency with very little effort.

On multiple burner furnaces, the combustion products of all burners mix together before they reach the flue gas sampling point. Furnaces should have manifolded flue gas outlets to obtain a common sampling point for flue gas analysis. If, for example, some of the burners are unintentionally set lean, and others rich, the excess air from the lean burners could consume the excess fuel from the rich burners, producing flue gas with optimum CO_2 and practically no free oxygen or combustibles. Samples of these gases could be misleading and show correct air/gas ratio, when in fact they are not. Also, if a burner is set rich and the excess combustibles in the flue gases find air in the stack and burn there, flue gas analysis will again suggest that the burner is properly adjusted.

To overcome the problem of misleading flue gas analysis in multi-burner furnaces, metering orifices should be installed on the gas lines to each burner. If pressure drops across all orifices are identical, gas flow to each burner will be the same.

7.4.4 Furnace Pressure Controls

Furnace Pressure Controls afford additional energy savings, particularly on topflued furnaces. If a furnace operates under negative pressure, cold air is drawn into it through badly fitted doors and cracks. This cold air has to be heated, adding to the burden on the combustion system and wasting fuel. If the furnace operates at high positive pressure, flames will sting out through doors, site ports and other openings, damaging refractories and buckling shells. Ideally a neutral furnace pressure overcomes both these problems. Automatic furnace pressure controls maintain a predetermined pressure at hearth level by opening or closing dampers in response to furnace pressure fluctuations.

In summation, good air/fuel ratio control equipment and automatic furnace pressure controls are two useful weapons for combating energy waste in heating operations. Properly applied, they also offer the side benefits of improved product quality and shortest possible heating cycles.

7.4.5 Furnace Efficiency

Conventional refractory linings in heating furnaces can have poor insulating abilities and high heat storage characteristics. Basic methods available for reducing the heat storage effect and radiation losses in melt and heat treat furnaces are:

1. Replace standard refractory linings with vacuum-formed refractory fiber insulation material.
2. Install fiber liner between standard refractory lining and shell wall.
3. Install ceramic fiber linings over present refractory liner.

Refractory fiber materials offer exceptional low thermal conductivity and heat storage. These two factors combine to offer very substantial energy savings in crucible, reverberatory and heat-treat furnaces. With bulk densities of 12-22 lbs/cu ft, refractory fiber linings weigh 8% as much as equivalent volumes of conventional brick or castables. In addition, refractory fibers are resistive to damage from extreme and rapid changes in temperature. These fiber materials are simple and fast to install. The density of fiber refractory is low, therefore much less heat is required to bring the lining to operating temperature. This results in rapid heating on the start-up. Conversely, cooling is also rapid, since there is less heat stored in the lining.

The basic design criteria for fiber lined crucible furnaces are the same as used for furnaces lined with dense refractories. Two rules should be followed.

1. The midpoint of the burner should be at the same level as the bottom of the crucible, and the burner should fire tangentially into the space between the crucible and lining.
2. The space between the outside of the crucible, and the furnace lining near the top should be about 10% of the crucible diameter.

Notes

Crucible furnaces can be constructed using a combination of fiber with dense refractory or almost entirely out of fiber. Increasing the proportion of fiber will increase the energy savings and maximize the other benefits previously listed.

Fiber materials are available in varying thicknesses, suitable for a complete monolithic installation, and composition to handle 2400°F, 2600°F, and 2800°F. The higher temperature compositions contain high aluminum fiber, which lowers the amount of shrinkage at elevated operating temperatures.

7.4.6 Furnace Covers

Installation of furnace covers is necessary to reduce preheating of combustion air. Thermal shock and spalling have caused problems in the fabrication and use of furnace covers. Materials available today, such as refractory fiber, have eliminated these problems.

In addition to technological advantages of fiber insulation, industry has also developed the capability of vacuum forming these materials over a variety of metallic support structures. Fiber insulation can be formed over either expanded metal or angle iron frames, or both, with V-type anchors attached. The anchors are made from high temperature alloys, holding the fiber to the metallic support structures to provide an integral, fully secured assembly. No part of the anchor system is exposed to excessive temperatures. This eliminates attachment problems for ladle pre-heaters, crucible furnace covers, and induction furnace covers. Installation of furnace covers improves the thermal efficiency of the process by approximately 50%.

7.5 Cogeneration

Cogeneration is the simultaneous production of electric power and use of thermal energy from a common fuel source. Interest in cogeneration stems from its inherent thermodynamic efficiency. Fossil fuel-fired central stations convert only about one-third of their energy input to electricity and reject two-thirds in the form of thermal discharges to the atmosphere. Industrial plants with cogeneration facilities can use the rejected heat in their plant process and thereby achieve a thermal efficiency as high as 80 percent.

7.5.1 The Economics of Cogeneration

In-plant generation of electricity alone is not usually economical; a variable use must be made of the by-product waste heat. For this reason the demand for both types of energy must then be in balance, typically 100 kW versus 600,000 Btuh, for a gas turbine installation.

In most potential applications of industrial cogeneration, more electric power would be produced in meeting the plant's thermal requirement than could be used internally. However, the enactment of PURPA (Public Utility Regulatory and Policies Act of 1978) greatly expanded the application for cogeneration by granting qualified cogenerators the right to:

- Interconnect with a utility's grid
- Contract for backup power with the utility at nondiscriminatory rates
- Sell the power to the utility at the utility's avoided cost.

There are several reasons for considering cogeneration besides energy savings.

- Energy independence
- Replacement of aging equipment
- Expansion of facilities
- Environmental considerations
- PURPA franchise to sell electricity
- Power factor improvement

However, plant conditions must fit certain requirements for a successful cogeneration application.

Notes

Some factors are:

- The nature of the process must be suitable for cogeneration. Certain processes lend themselves more readily to cogeneration, such as refining, petrochemical, and pulp and paper industries, which have accounted for many of the larger cogeneration installations to date.
- The rate differential between electricity and fossil fuels should be relatively high on an equivalent Btu basis.
- Plant operation of 6,000 hours per year is usually the minimum needed to justify installation and continuous operation thus improving reliability by minimizing dependence on the starting system.
- A source of waste fuel in suitable quantity provides an attractive incentive for cogeneration.

Although plant conditions may appear favorable for cogeneration, the long-term situation should also be considered before proceeding with a project. Factors that should be considered for long-term evaluation of cogeneration are:

1. The long-range cost of fuel for gas- and oil-fired units must be considered
2. Excess coal-fired generating facilities and abundant coal supplies can result in increased competition from utilities and lower avoided costs.
3. Utilities may press for repeal of PURPA or at least the ability to discount the avoided cost purchase rate.
4. Long-term continuity of operations. Facilities that are expecting significant changes in operation or ownership should determine the viability of the initially large investment.
5. Reliability requirements of the cogeneration facility will be important. Maintenance and reliability of equipment is very important as the cost of penalty for additional utility charges for any outage can be significant where demand charges are high.

Aside from long-term effects, other alternatives to cogeneration may negate some of its benefits. These alternatives include renegotiation of electrical rates, load management, technology improvements, process changes, and energy conservation.

1. Renegotiating rates may enable an industrial plant to duplicate the potential economic benefits of cogeneration without the risk of building and operating a power plant.
2. Load management techniques may be able to modify peak demands.
3. Major technological improvements or process changes can occur and significantly alter the present energy requirements.
4. Where available capital is limited, energy conservation may be able to reduce electrical consumption significantly by using projects with more attractive returns.

7.5.2 Cogeneration Cycles

There are many possible types of cogeneration cycles but most can be considered variations of the two basic cycles gas turbine and steam/turbine as shown in Exhibit 7.18.

In the case of the gas turbine cogeneration cycle, air is compressed and injected into the combustor along with the fuel, generally natural gas. The combustion gases at high temperature and pressures expand rapidly in the turbine, doing work in the process. The turbine drives an electrical generator and air compressor. The exhaust gas from the turbine, which is still at a high temperature, is then used to generate steam in a waste heat boiler.

The cost of a gas turbine with heat recovery equipment ranges between $600 to $1,000 per kW, depending on the specific design conditions. Gas turbine systems costs are reduced by over 50 percent with larger units.

There are several advantages of the gas turbine system in comparison with the steam/turbine

Notes

system.

- Lower capital cost (normally 50 to 70 percent of steam/turbine cost)
- Lower operating and maintenance cost.
- Higher power-to-heat ratio that is generally more desirable in industrial applications.

A reciprocating engine, generally a diesel, can be used in lieu of the turbine to supply the motive power. Since the exhaust from the engine is at a much lower temperature, only low pressure steam (maximum of 50 psig) or hot water can be generated without supplemental heating.

Exhibit 7.18: Cogeneration Cycles

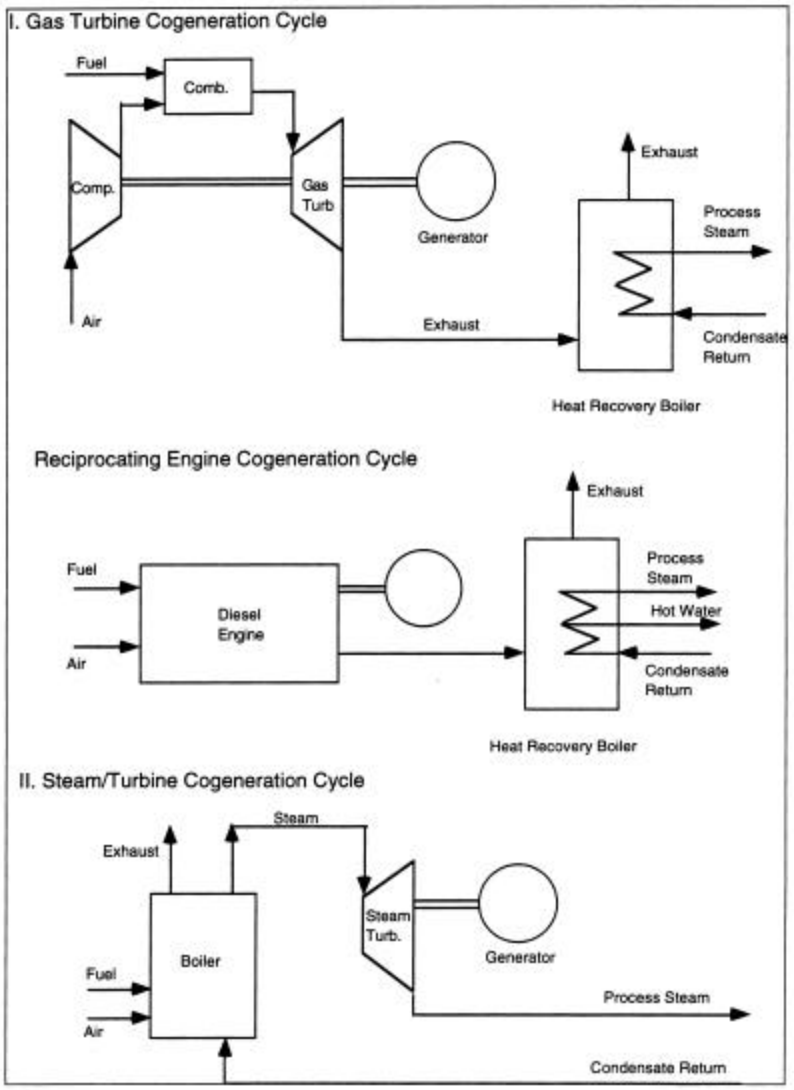

7.5.2.1 Cogeneration High-Spot Evaluation

A quick evaluation of potential cost savings from installation of a cogeneration system can be performed to determine if a more detailed analysis is warranted. Example calculations are presented in this section to illustrate a high-spot evaluation. These calculations are illustrated in Exhibit 7.19 and Exhibit 7.20.

Notes

Exhibit 7.19: Gas-Turbine Cycle

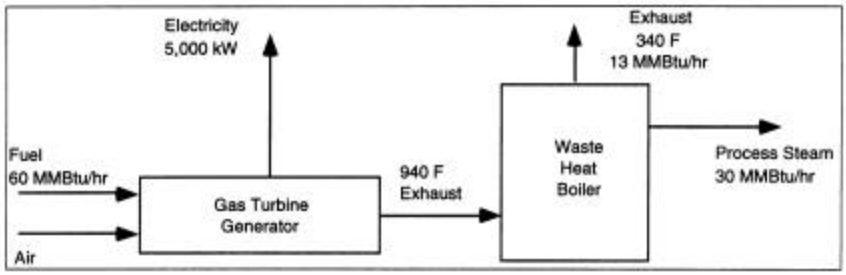

Given process steam demand = 30,000 lbs/hr equivalent to 30 MMBtu/hr

Heat Input to Boiler = (30 MMBtu/hr) / (70% Waste heat eff.) = 43 MMBtu/hr

Exhaust = 43-30 = 13 MMBtu/hr

Electrical output (based on typical 100 kW/600,000 Btu):

= {(30 MMBtu/hr) / (0.6 MMBtu/hr)} x 100 kW = 5,000 kW

Equivalent Btus = 5,000 kW x 3413 Btu/kW = 17 MMBtu/hr

Total Energy Input = 17 + 30 + 13 = 60 MMBtu/hr

Annual cost of operation:

= 60 MMBtu/hr x 8,000 hrs x $3.00/MMBtu/hr = $1,440,000/yr

Avoided cost of purchased electricity:

= 5,000 kW x 8,000 hr x$0.05/kWh = $2,000,000/yr

Avoided cost of steam:

= {[(30 MMBtu/hr) x (80,000 hr)] / [80% Steam boiler eff.]} x $3.00 / MMBtu = $900,000 per year

Annual Saving = $2,000,000 + $900,000 - $140,000 = $1,460,000/yr

Investment = $1,000/kW x 5,000 kW = $5,000,000/yr

Payback = $5,000,000 / 1,460,000 = 3.4 years

Given - process steam demand = 30,000 lbs/hr, equiv. to 30 MMBtu/hr

- boiler steam = 600 psig, 750 F
- turbine steam rate = 12.2 lbs/kWh @ 70% eff. = 17.4 act. lbs/kWh

(Refer to Steam Turbine Tables for other conditions)

kWh = (30,000 lbs/hr) / (17.4 lbs/kWh) = 1720 kW

Equivalent Btu/hr = 1720 x 3413 x 10 -6 = 7.4 MMBtu/hr

Total energy input = (7.4 + 30) / (80% boiler eff.) = 44 MMBtu/hr

Annual cost of operation:

= 44 MMBtu/hr x 8,000 hrs x $3.00/MMBtu = $1,056,000/yr

Avoided cost of electricity:

= 1720 kW x 8,000 hrs x $0.05/kWh = $688,000/yr

Avoided cost of process steam:

Notes

= [(30 MMBtu/hr) / (80% boiler eff.)] x (80,000 hrs) x ($3,00/MMBtu/hr) = $900,000/yr

Annual Saving = $688,000 + $900,000 - $1,056,000 = $532,000/yr

Investment = $1,500/kW x $1,720 kW = $2,580,000/yr

Payback = ($2580,000) / ($532,000) = 4.8 years

Exhibit 7.20: Steam-Turbine Cycle

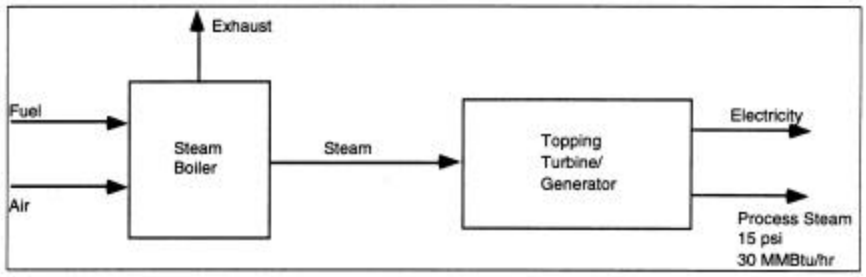

Oil and gas-fired engine cogeneration systems are most suitable for smaller installations (under 1 MW). Packaged units are available from a few kilowatts to over a megawatt. The systems include a prime mover, generator switchgear, heat recovery, and controls. Equipment costs range from $500 to $1,000/kW. Installation costs for plumbing, electrical, and other facilities typically add 50 to 150 percent to the equipment cost. Total turnkey costs range from $700 to $2,000/kW.

Experience with the smaller size units (under 100 kW) has been relatively short. In the steam/turbine system, fuel is burned in a boiler to generate steam. The steam is passed through a topping turbine that drives the electric generator. The exhaust steam is then used for process heating.

The greatest advantage of these systems is their ability to use practically any kind of fuel including lower-cost solid or waste fuels, either alone or in combination. The capital cost of steam turbine systems is higher, typically 50 to 100 percent greater than a gas turbine system using natural gas or oil.

7.5.2.2 Estimate of Savings

A high-spot estimate of savings should be made as early in the investigation as possible to confirm that cogeneration is merited; a detailed energy-load analysis should be made. This involves preparing a profile on the plant's steam and electric usage, taking into account daily, weekly, monthly, and seasonal variations. Using actual loads instead of average loads is important to determine whether periods of low-load factor are a problem. System performance will be best where output is steady instead of fluctuating with load.

With this data, plant personnel can select the most advantageous cogeneration cycle, taking into account various possible operating conditions and equipment options. A computer model analysis is very useful for this purpose. Equipment vendors can be utilized if outside assistance is needed to make the computer analysis.

The options that can be considered are as follows:

- Combined cycle - permits the use of a flexible instead of fixed ratio of electrical to thermal energy to adjust for variations in the steam demand
- Steam pressure - the higher the pressure the more efficient the turbine steam rate. When high-pressure steam or gas must be reduced in pressure through a pressure-reducing valve, a simpler system known as "induction generation" can be used to generate electricity.
- Steam injection - adds to turbine efficiency
- Extraction turbine - provides process steam for use at different pressures

Notes

- Water treatment method - high-pressure steam turbines require more sophisticated boiler feed water treatment
- Dual burners - burners capable of burning more than one fuel add flexibility to use lowest cost fuel
- Degree of automation - fully automatic systems increase price significantly
- Duct burner in exhaust stream - increases output and permits generation of higher pressure steam
- Steam condenser - permits additional electrical generation from steam turbine at some loss in efficiency
- Generator type - power factor is improved with higher cost synchronous generator
- Parallel or independent operation will affect switchgear selection.

After the operating conditions and cogeneration facilities have been fully defined, the savings and investment estimates should be revised to complete the initial evaluation of the cogeneration facility.

7.6 Thermoenergy Storage Systems

The application of thermal storage is based on savings from using lower cost electrical rates with night-time operation to provide daytime thermal needs. Two conditions must be present to make thermal storage attractive.

First, there must be a significant difference between night and daytime electrical costs. The difference can be increased by higher summertime rates and inclusion of a ratchet provision for the next 11 months. Utilities generally encourage thermal storage because it permits them to transfer a portion of their daytime load from expensive peaking facilities to nighttime base-loaded, higher efficiency coal and nuclear plants.

Accordingly, the electric rate structure will encourage customers to shift their electrical load from daytime peak hours to nights and weekends by any or all of the following provisions in the rate structure.

- Time-of-day energy charge
- Demand charges (per kW peak power consumed during peak hours each month)
- Winter/summer rates for energy and/or demand charges
- A ratchet clause (monthly demand is the same or same percentage of the highest demand in previous 11 months).

Second, the daytime refrigeration load must result in high daytime cost, generally from peak demands, which have the potential to be reduced with thermal storage. Plants with one-shift operation or high solar load can be good candidates. Thermal storage has found application, for example, in office air conditioning. On the other hand, industrial plants with three-shift operation are normally not good candidates because of their higher content load.

Before considering thermal storage as a means of reducing electrical cost, alternate methods should be evaluated, as in most energy conservation approaches. Some possible alternate methods are absorption refrigeration, demand control, load scheduling, and using an emergency generator for peak shaving.

7.6.1 High Spot Evaluation

Where thermal storage appears to be a viable option, a high spot evaluation should be made to determine if further investigation is justified (see Exhibit 7.21). The incremental electrical cost must be broken down into its separate components for this evaluation. In this example, it is assumed there is no off-peak demand charge and the off-peak electrical energy rate is less than the on-peak rate. For simplicity it is also assumed that the daytime refrigeration load increases the peak demand directly by 1 kW for each kW of load. In practice, the peak demand may be caused in part by other operations, therefore, the actual potential reduction in peak demand from thermal storage would depend on its interrelationship with other loads.

Notes

7.6.2 Electric Load Analysis

A detailed electrical load analysis is necessary to determine the impact thermal storage will have on the existing peak demand because of this interrelationship with other loads. Use of average loads will not be satisfactory for this purpose.

The operating cost per ton for a thermal storage system is also higher than for a conventional system. The refrigeration machine must operate at a lower temperature, which requires more energy per ton. There is also some inherent loss in storage. One system reported that power consumption increased by 17 percent when the system was producing ice.

Exhibit 7.21 shows that incremental investment for thermal storage results in an attractive payback. However, it should be emphasized that the example attributes maximize demand saving over the full year of operation and for the full capacity of the unit. A well-documented analysis of all energy flows and costs is needed for a more in-depth evaluation. A number of questions will also have to be answered as part of the evaluation, such as:

- Should the thermal storage be for heating storage, cooling storage, or both?
- Should the system handle 100 percent of the cooling load or only the portion needed for load leveling?
- Should the storage system be water or ice?
- Should the storage system be for a daily or weekly cycle?

Generally, systems have been for daily cycles and load levelers only.

Exhibit 7.21: Thermal Storage High Spot Evaluation

Electrial Rate:	**On-Peak**	**Off-Peak**
Demand kW	$9.40	NC
Energy kWh	$0.03	$0.025
Conventional Refrigeration System		
Demand Cost/ton-yr = $/kW x 12 months		
	$9.40 x 12 months =	$113 / yr
Energy Cost/ton-yr = 1 kWh/ton x $/kWh x hrs/yr		
	= $0.03 x 8,000 =	$240
Total Cost/ton-yr	= $113 + $240 =	$353
Thermal Storage System		
Cost/ton-yr = 1 kWh/ton x % increase x $/kWh x hrs/yr		
	= 1 x 1.20 x $0.025 x 8,000	$240
Savings	= $353 - $240 =	$113
Investment		
Investment/ton – Conventional Refrigeration System		$400
Investment/ton – Thermal Storage System		$550
Additional Investment/ton		$150

Notes

REFERENCES

1. "Testing & Measurement" Bulletin 4011 Bacharch Inc.
2. "Boiler Efficiency" Bulletin CB 7767 Cleaver Brooks Co.
3. "Heat-Timer Model HWR" File No. 30-E-1 Heat Timer Co.
4. "Digi-Span" File No. 980M Heat Timer Co.
6. "Auto. Vent Damper" Form No. 60-2523 Honeywell Inc.
7. "Chronotherm 3" Form No. 68-0056-1 Honeywell Inc.
8. "Perfect Climate" Products Form 70-2317/8-92 Honeywell
9. "Flame Safeguard Manual" No. 708107 Honeywell
10. "Principles of Steam Heating" Dan Holohan
11. Maine Oil & Solid Fuel Board Rules
12. NFPA Code #31 Installation of Oil Burning Equipment
13. "Boiler Efficiency Improvement" Dyer/Maples
14. "Application Data for Burners" Form No. 30-60004A Iron Fireman Div. Dunham Bush Co.
15. Grainger, Inc., Air Circulators, Dayton Fans, p. 2318.
16. McMaster-Carr Supply Company, *Net Prices Catalog*.
17. Rutgers University, Industrial Assessment Report No. RU-00146, ECO No. 03, pp. 28-30.
18. Chase Industries, Bulletin No. 8102, 1981.
19. Colorado State University, *Allied Signal Energy Conservation Training Program*, 1994.
20. Buckley, Norman A., "Application of Radiant Heating Saves Energy," *ASHRAE Journal*, V. 31, No. 9, September 1991, p. 18.
21. Incropera, Frank P. and DeWitt, David P., *Fundamentals of Heat and Mass Transfer, 3rd Ed.*, John Wiley & Sons, 1990.
22. University of Tennessee, Industrial Assessment Report No. TN-0535, ECO No. 01, pp. 32-33.
23. Georgia Institute of Technology, Industrial Assessment Report No. GT-0541. ECO No. 02, pp. 8-11.
24. Marks' Standard Handbook for Mechanical Engineers, McGraw-Hill Book Company, 1987.
25. Dyer, D. P., G. Maples, etc., Boiler Efficiency Improvement, Boiler Efficiency Institute, Auburn, AL, 1981, pp.4-31.
26. Witte, L.C., P. S. Schmidt, D.R. Brown, Industrial Energy Management and Utilization, Hemisphere Publishing Corp., Washington, D.C., 1988, pp. 530-532.
27. Kennedy, W.J., W.C. Turner, Energy Management, Prentice-Hall, Englewood Cliffs, NJ, 1984.

Notes

THIS PAGE INTENTIONALLY LEFT BLANK

Notes

CHAPTER 8. PRIME MOVERS OF ENERGY

This chapter discusses equipment used to move liquids and gases from place-to-place in a facility or used to pressurize liquids or gases in industrial facilities. A description of each piece of equipment, its general uses, operation, and common opportunities for energy conservation are presented. There will be case studies referenced throughout the chapter that can be found in Appendix E.

8.1 Pumps

Pumps are widely used for transfer of liquids from one place to another. Pumps are usually driven by electric motors; thus some of the considerations about pumps and electric motors might overlap. For some specific applications, pumps can be driven by compressed air or hydraulically.

There are many types of pumps used in industry depending on the including: centrifugal pumps (used predominantly for transfer of large volumes), metering pumps (used for precise delivery of liquids to a point of application and ensuring the constant discharge regardless of backpressure in the lines), and progressive cavity pumps or peristaltic pumps (used for delivery of very viscous materials and others).

Pump manufacturer generally provide pump curves at the time of the sale. They are essential for establishing the operation range and if any changes for pumping systems are considered the curves have to be considered.

8.1.1 Operation

Opportunities for savings in pump operation are often overlooked because pump inefficiency is not readily apparent. Pumps can run inefficiently for several reasons:

1. Present operating conditions differ from the design conditions. This change often occurs after a plant has undertaken a water conservation program.
2. Oversized pumps were specified and installed to allow for future increases in capacity.
3. Conservative design factors were used to ensure the pump would meet the required conditions.
4. Other design factors were chosen at the expense of pump efficiency when energy costs were lower.

8.1.1.1 Pump Survey

A survey of pumps should concentrate on the following conditions associated with inefficient pump operation. These are discussed in order of decreasing potential for energy savings in existing installations. For the survey to produce worthwhile savings, only pumps above a certain size, such as 25 horsepower, need to be checked:

1. Excessive pump maintenance. This problem is often associated with:
   a. Oversized pumps that are heavily throttled.
   b. Pumps in cavitation.
   c. Badly worn pumps.
   d. Pumps that are misapplied for the present operation.
2. Any pump system with large flow or pressure variations. When normal flows or pressures are less than 75 percent of their maximum, energy is probably being wasted from excessive throttling, large bypassed flows, or operation of unneeded pumps.
3. Bypassed flow. Bypassed flow, either from a control system or deadhead protection orifices, is wasted energy.
4. Throttled control valves. The pressure drop across a control valve represents wasted energy, which is proportional to the pressure drop and flow.
5. Fixed throttle operation. Pumps throttled at a constant head and flow indicates excess capacity.

Notes

6. Noisy pumps or valves. A noisy pump generally indicates cavitation from heavy throttling or excess flow. Noisy control valves or bypass valves usually mean a high pressure drop with a corresponding high energy loss.

7. A multiple pump system. Energy is commonly lost from bypassing excess capacity, running unneeded pumps, maintaining excess pressure, or having a large flow increment between pumps.

8. Changes from design conditions. Changes in plant operating conditions (expansions, shutdowns, etc.) can cause pumps that were previously well applied to operate at reduced efficiency.

9. A low-flow, high-pressure user. Such users may require operation of the entire system at higher pressure.

10. Pumps with known overcapacity. Overcapacity wastes energy because more flow is pumped at a higher pressure than required.

Once the inefficient pumps have been identified, the potential savings and the cost of implementing the changes should be analyzed. Comparison of the actual operating point with the pump performance curve will facilitate the analysis. Actual performance may differ from the original design because of process changes, faulty basic data, conservative safety margins, or planned expansions never realized.

8.1.1.2 Energy Conservation Measures

Energy may be saved in pump operation in a number of ways, including the following techniques arranged in approximate increasing order of investment cost:

1. Shut Down Unnecessary Pumps-

   This obvious but frequently overlooked energy-saving measure can often be carried out after a significant reduction in the plant's water usage. If excess capacity is used because flow requirements vary, the number of pumps in service can be automatically controlled by installing pressure switches on one or more pumps.

2. Restore Internal Clearances-

   This measure should be taken if performance changes significantly. Pump capacity and efficiency are reduced as internal leakage increases from excessive backplate and impeller clearances and worn throat bushings, impeller wear rings, sleeve bearings, and impellers.

3. Trim or Change Impellers-

   If head is excessive, this approach can be used when throttling is not sufficient to permit the complete shutdown of a pump. Trimming centrifugal pump impellers is the lowest cost method to correct oversized pumps. Head can be reduced 10 to 50 percent by trimming or changing the pump impeller diameter within the vendor's recommended size limits for the pump casing.

4. Control by Throttling-

   Controlling a centrifugal pump by throttling the pump discharge wastes energy. Throttle control is, however, generally less energy wasteful than two other widely used alternatives: no control and bypass control. Throttles can, therefore, represent a means to save pump energy.

5. Replace Oversized Pumps-

   Oversized pumps represent the largest single source of wasted pump energy. Their replacement must be evaluated in relation to other possible methods to reduce capacity, such as trimming or changing impellers and using variable speed control.

6. Use Multiple Pumps-

   Multiple pumps offer an alternative to variable speed, bypass, or throttle control. The savings result because one or more pumps can be shut down at low system flow while the other pumps operate at high efficiency. Multiple small pumps should be considered when the pumping load is less than half the maximum single capacity.

Notes

7. Use a Small Booster Pump -

   The energy requirements of the overall system can be reduced by the use of a booster pump to provide the high-pressure flow to a selected user and allow the remainder of the system to operate at a lower pressure and reduced power.

8. Change Pump Speed-

   Variable-speed drives yield the maximum savings in matching pump output to varying system requirements. However, variable speed drives generally have a higher investment cost than other methods of capacity control. Several types of variable-speed drives can be considered:

   - Variable-speed motors, either variable frequency or DC
   - Variable-speed drives such as traction drives, for constant-speed motors
   - Two-speed motors when low speed can satisfy the requirements for significant portion of the time

As an example of the savings from the use of a smaller pump, assume 300 tons of refrigeration are required during the summer months but only 75 tons for the remaining nine months. One of two 700-gpm chilled-water pumps, equipped with 40-horsepower motors, is operated during the winter, with two thirds of the flow bypassed. A new 250-gpm pump designed for the same discharge head as the original two units consumes only 10 horsepower. The electric savings from operating the small pump during the winter is:

Annual Savings = (40 hp - 10 hp) x 6,000 hrs/yr. x 9 months/12 months x $0.041/hp-hr = $5,540

The installation cost of a new pump is about $5,000.

The following example illustrates the possible savings from trimming an impeller. A double suction centrifugal pump with a 13.75-inch diameter impeller pumps process water. The demand is constant (2,750 gpm) and the pump is controlled by a manual throttle valve. The pump operates at 164 feet head, 2,750 gpm and 135.6 brake horsepower (point A in Exhibit 8.1). A 16 psig (37-foot) pressure drop occurs across the partially closed throttle valve, with only a 6-foot drop across the completely open valve.

If the pump were exactly matched to the system requirements, only 127 feet of head would be required without the valve. Because even the fully open valve has a 6-foot pressure drop, the minimum head required becomes 133 feet. To this, a 5 percent allowance should be added as a tolerance for the accuracy of the field measurements and impeller trimming. The minimum total head required is 140 feet. Based on the pump affinity laws, the trimmed impeller diameter should be 13 inches, as shown in step 1 below.

With a trimmed 13-inch impeller, the pump will operate slightly throttled at 140-feet head, 2,750 gpm and 115.7-brake horsepower, as shown by point B in Exhibit 8.1. The trimmed impeller reduces power consumption by 19.9-brake horsepower and saves $5,440 per year (see steps 2-4). Trimming and balancing an impeller usually cost less than $1,000, and payback, therefore, is less than three months.

1. Determine the impeller diameter needed to reduce the head from 164 feet to 140 feet and maintain 2,750-gpm flow. Apply the affinity laws noting that both the head and flow are reduced as the impeller is trimmed

   a. $H_1 / H_2 = D_1^{\ 2} / D_2^2$ and $Q_1 / Q_2 = D_1 / D_2$ $H_1 Q_1 / H_2 Q_2 = D_1^3 / D_2^3$

   b. Holding Q constant = $D_1 / D_2 = (H_1 / H_2)^{1/3} = (164 / 140)^{1/3} = 1.054$

   c. $D_1 = (D_2 / 1.054) = 13.0$ inches

   where,

   H = head in feet; H_1 , before the reduction, and H_2 , after the reduction

   D = diameter of the impeller in inches

   Q = flow in gpm

   E = pump efficiency

Notes

Exhibit 8.1: Typical Centrifugal Pump Characteristics

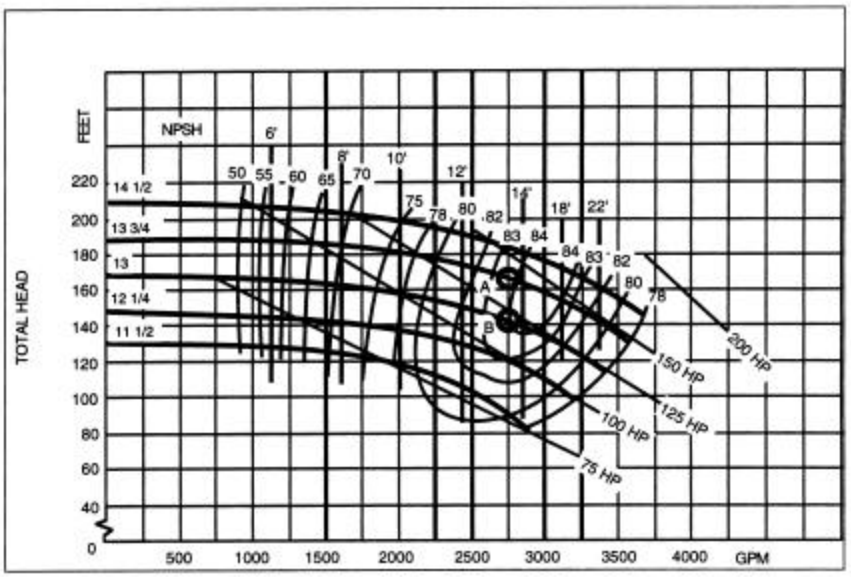

2. Point A: Oversized pump (13.75-inch impeller) throttle back to 2,750 gpm.

3. Point B: Trimmed impeller (13 inches) throttled back to 2,750 gpm.

   bhp = (140 x 2,750) / (3,960 x 0.84) = 115.7

4. Annual Savings = 135.6 - 115.7 = 19.9 bhp

   $/yr = 19.9 x (1/0.90) motor eff. ´ 6,000 hrs/yr ´ $0.041/hp-hr = $5,440

As with other equipment, energy conservation for pumps should begin when the pump is designed. Nevertheless, the savings from modification of an existing system often justify the cost.

The following example illustrates the application of affinity laws for variable frequency drive pump savings. With fans the affinity laws can be applied directly because the system resistance is purely flow-related. With pumps or fans having a static head offset, the system resistance curve also changes with pump speed.

A typical centrifugal pump curve in Exhibit 8.2 shows that by throttling the 1,750 rpm motor the pump delivers 2,500 gpm at 236 ft. head. Given a system analysis showing that 150 ft. of head is required to deliver 2,500 gpm with no throttling, the savings for operating the pump at reduced speed without throttling can be determined by the following trial-and-error method.

The affinity laws are:

$$S_1 / S_2 = Q_1 / Q_2 = (H_1 / H_2)^{1/3} = (BHP / BHP)^{1/3}$$

where,

S_1 = original pump speed, rpm

S_2 = new pump speed, rpm

Q_1 = flow on original pump curve, gpm

Q_2 = system flow required, gpm

H_1 = head on original pump curve, ft.

H_2 = head required by system for Q_2, ft.

Notes

BHP_1 = pump horsepower at Q_1 and H_1

BHP_1 = pump horsepower required for operation at Q_2, H_2

1. Assume a new pump speed, try 1,500 rpm.
2. Calculate the speed ratio

   $S_1 / S_2 = 1{,}500/1{,}700 = 0.8824$

3. Calculate Q_1 from the affinity laws.

   $Q_1 = Q_2 / (S_1 / S_2) = 2{,}500/0.8824 = 2{,}833$ gpm

4. Determine H_1 from the original curve at Q_1

   $H_1 = 233$ ft.

5. Calculate H_2 from the affinity laws:

   $H_2 = (S_2 / S_1)^3 \times H1$

   $= 0.8824 \times 233$

   $= 205.6$ ft.

6. Compare H_2 from step 5 with the desired H_2. Since H_2 at 205.6 ft. is greater than the desired H_1 at 150 ft., the calculation must be repeated using a lower rpm. Several iterations of this procedure give:

   $S_1 = 1{,}405$ rpm, $Q_1 = 3{,}114$ gpm, and $H_1 = 232.5$ ft.

From Q_1 and H_1 above a new operating point 1 is determined. The important concept here is that point 1 is not the original system operating point (2,500 gpm, 236 ft.). Rather it is the one and only point on the original pump curve that satisfies the affinity law equations at the new operating point 2 (2,500 gpm, 150 ft.). It must be determined before BHP_2 can be calculated from the affinity laws.

Exhibit 8.2: Centrifugal Pump Curve

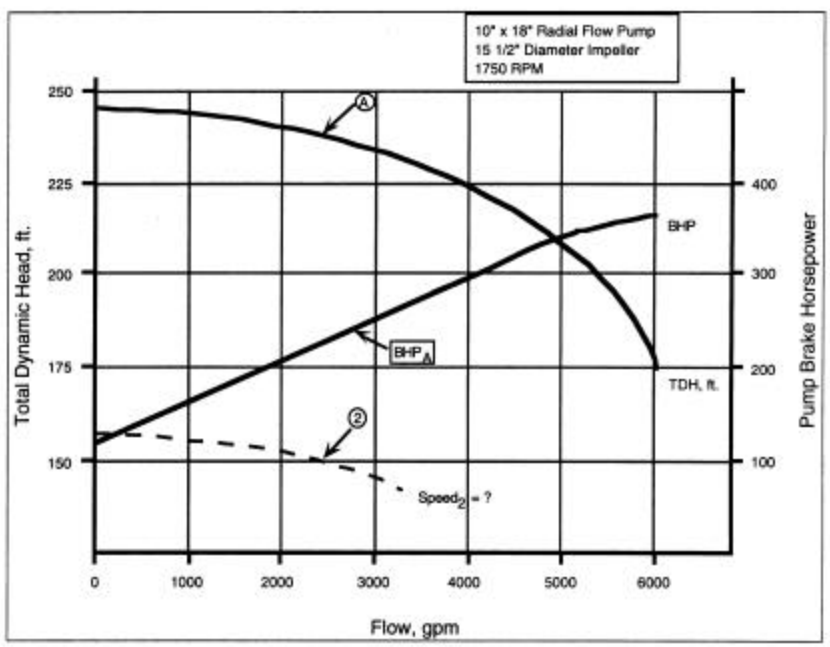

Notes

7. From the pump curve determine BHP_1 for Q_1 at 3,114 gpm.

   $BHP_1 = 258$

8. Calculate BHP_2 using affinity law

   $BHP_2 = BHP_1 \ (S_2 / S_1)^3$

   $= 258 \ (1{,}405/1{,}750)^3 = 258 \times 0.5175$

   $= 133.5$ BHP

9. From the pump curve determine the actual BHP (BHP_A) for the original operating point at 2,500 gpm.

   $BHP_A = 230$ BHP

10. Determine reduction in horsepower:

    BHP savings = 230 - 133.5 = 98.5 BHP

    Note the savings are not found from BHP_1-BHP_2, BHP_A-BHP_2

These calculations can be performed for other types of pumps using the curves presented in Exhibits 8.3 – 8.5. Manual calculation of savings for variable speed drives will be tedious if they must be determined for a number of conditions. Computer programs can simplify the task.

Exhibit 8.3: Typical Pump and System Curves, Driven by Adjustable Speed Drive

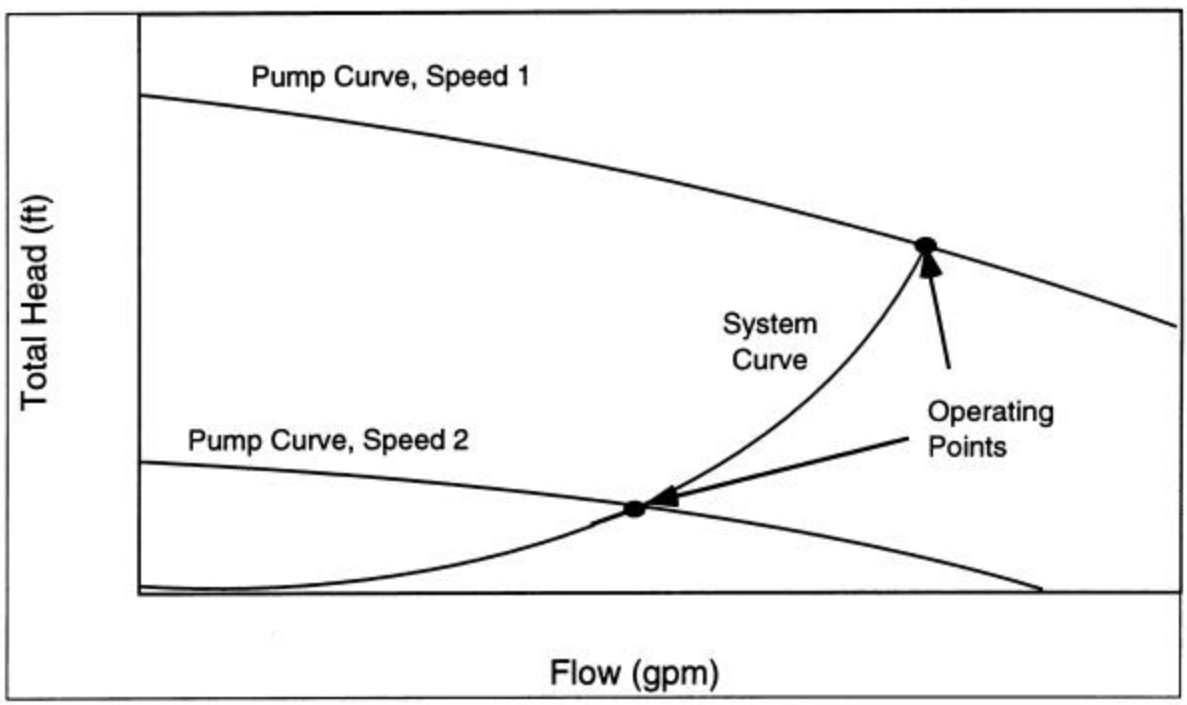

Notes

Exhibit 8.4: Typical Pump and System Curves for Pump with Throttling Valve

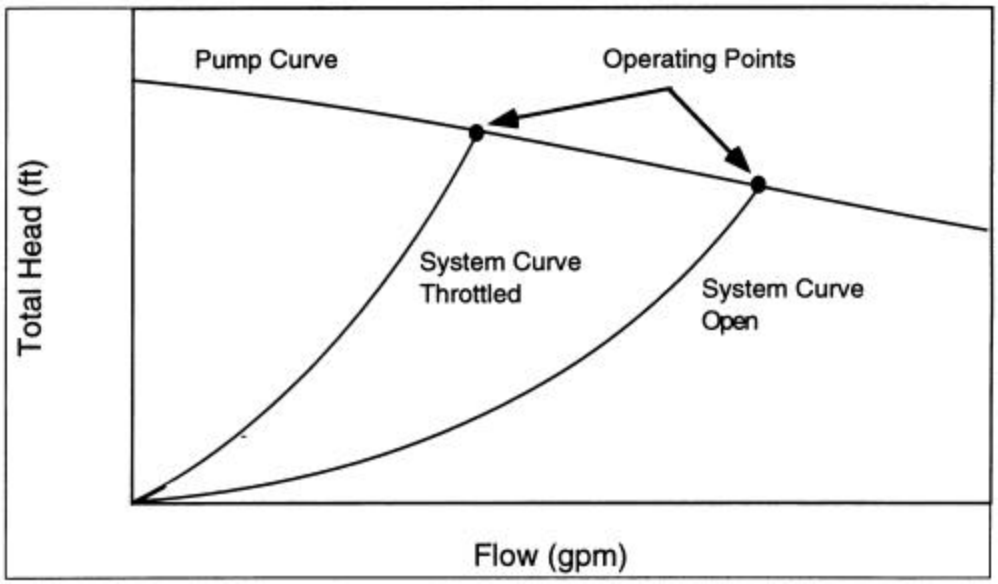

Exhibit 8.5: Pump Power Requirements for Throttling and Adjustable Speed Motors

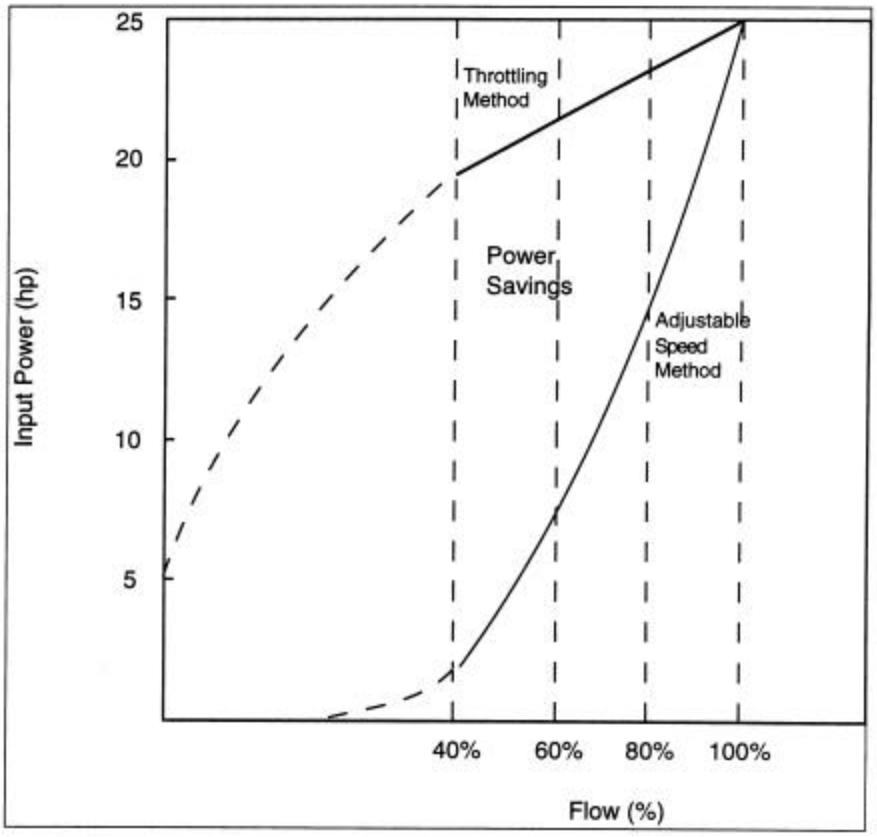

Notes

8.1.2 Considerations for Installation Design

The position of the pump with respect to the reservoir from which the liquid is to be taken is of utmost importance. If the pump is higher than the tank from which the fluid is being pumped the boiling of the fluid at local temperature can occur. The formation of the bubbles is called cavitation. The bubble collapse can happen at the higher pressure region (tips of the impeller), thus causing "cavitation erosion." This results in a very low pump and damage of the impeller will follow soon. In order to avoid cavitation in the pump, the installation has to satisfy a condition of net positive suction head (NPSH). The manufacturer of the pump supplies the net positive suction head required and that is the minimum pressure head at the inlet for the type and model of the pump that has to be maintained in order to avoid cavitation inside the pump. The net positive suction head required accounts for pressure drop inside the pump. The pressure head at the inlet has to be calculated for each installation. Conventional tools for pressure losses in pipes are commonly used and adequate. Since the occurrence of bubbles forming inside the housing of the pump is absolutely forbidden, the backpressure of the system is of the same importance as NPSH. Adequate backpressure will prevent the formation of bubbles and can be achieved, if not currently available, by installation of backpressure valve.

Exhibit 8.6: Comparative Energy Usage with Various Methods of Control

Operating Situation	Hours of Operation	Average kW Usage	Propeller Fan Energy [kWh]	Blower Fan Energy [kWh]
Constant Operation at Full Capacity	1202.2	P = 16.2 B = 32.4	19475.6	38951.2
Single Speed Fan Cycling	P = 765.3 (*) B = 852.7	P = 16.2 B = 32.4	12.397.9	27627.5
Two Speed Fan Cycling	P = 1132 (*) B = 1146	P = 4.3 B = 8.55	4867.6	9798.3
Variable Control at Constant Speed	1202.2	P = 2.72 B = 5.44	3270	6540
Variable Speed Control	1202.2	P = 1.99 B = 3.98	2392.4	4704.8

*The propeller fan will operate slightly fewer hours in these modes because of the cross tower's cooling effect with the fan off.

8.2 Fans

Fans provide the necessary energy input to pump air from one location to another while they overcome the various resistances created by the equipment and the duct distribution system. Fans are generally classified as either centrifugal fans or axial-flow fans, according to the manner of airflow through the impeller. There are a number of subdivisions of each general type. The subdivisions consist of different styles of impellers and the strength and arrangement of construction. Because the type of impeller dictates fan characteristics, it influences the amount of energy (horsepower) the fan needs to transport the required volume of air. The centrifugal fan has four basic types of impellers--airfoil, backward curved, radial, and forward-curved. Exhibit 8.7 shows the nominal efficiency of the various types of fans at normal operating conditions

Notes

Exhibit 8.7: Nominal Efficiency of Fans at Normal Operating Conditions

Type of Fan	Efficiency %
Axial Fan	85-90
Centrifugal Fans	
Airfoil Impellers	75-80
Backward-Curved Impeller	70-75
Radial Impeller	60-65
Forward-Curved Impeller	55-60

Reductions in exhaust airflow are usually obtained by adjustment of dampers in the duct. Damper control is a simple and low-cost means of controlling airflow, but it adds resistance, which causes an increase in fan horsepower. Accordingly, if fan output is heavily throttled or dampered, the savings opportunity of alternate methods of volume control should be investigated.

More efficient methods of volume control are to:

1. Install inlet vane control.
2. Reduce the speed of the fan.
3. Provide variable-speed control.

Exhibit 8.8 shows the reduction in horsepower realized by reducing fan speed.

Exhibit 8.8: Effect of Volume Control on Fan Horsepower

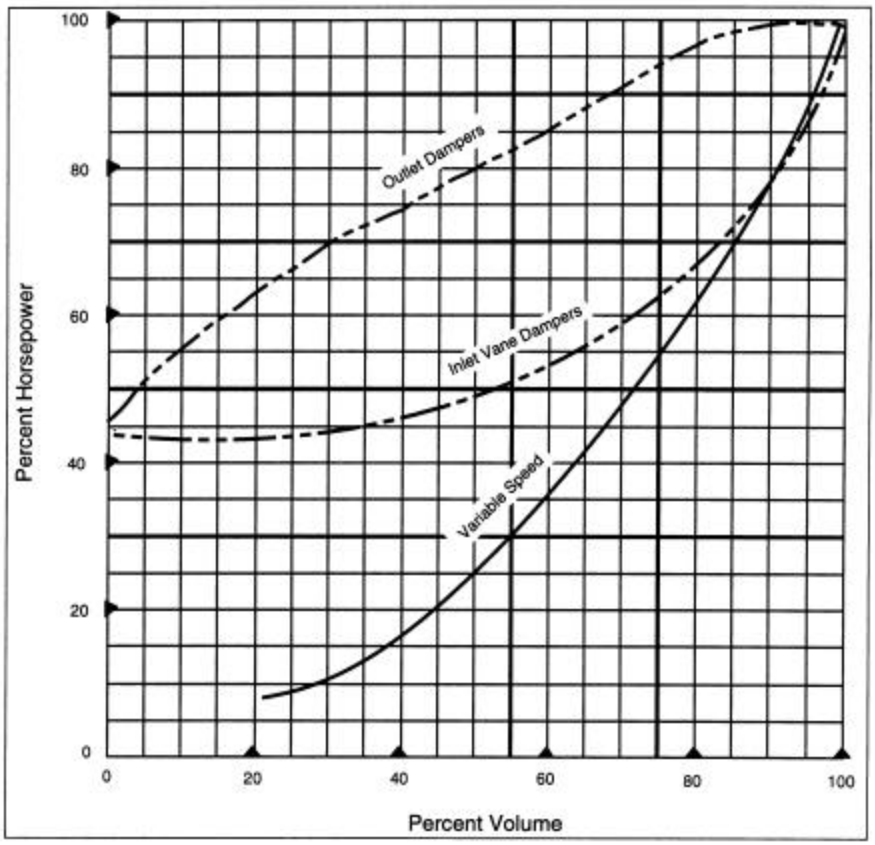

Notes

Before alternate methods of volume control are considered, the condition of the existing fan and duct system should be checked. Some factors that can reduce fan efficiency are:

1. Excessive static-pressure losses through poor duct configuration or plugging.
2. Duct leakage from poor joints or flange connections, access doors left open, damage or corrosion, etc.
3. An improperly installed inlet cone, which inadequately seals the fan inlet area and allows excessive air recirculation.
4. Excessive fan horsepower caused by poor fan maintenance, such as bad bearings, shaft misalignment, worn impeller blades, or corroded fan housing.
5. Dirt and dust accumulations on fan blades or housing.
6. Buildup of negative pressure.

Once the existing system operates as efficiently as possible, alternate methods to control flow can be evaluated.

8.2.1 Inlet Vane Control

Inlet vane control is the most commonly used device for automatic control of centrifugal or in-line fan output after damper control. Prespinning as well as throttling the air prior to its entry into the wheel reduces output and saves power. Fans must be of sufficient size to permit retrofitting; the wheel diameter should be larger than 20 inches.

8.2.2 Reduced Speed

When fan output can be reduced permanently, an economical method is to change belt sheaves. A slower-speed motor can also be used if the first approach is not suitable. A two-speed motor is another alternative if the fan operates at low volume for a significant portion of the time but full capacity is still required part-time.

As an example of the savings to be realized from a reduction in fan speed, assume the exhaust airflow requirements have been reduced 50 percent on a 20-horsepower centrifugal fan. Reducing fan rpm 50 percent by changing belt sheaves will halve fan output. Exhibit 8.8 shows a horsepower comparison of various methods of centrifugal fan control for typical fans. A 50 percent reduction with an outlet damper requires 80 percent of rated power; with a slower-speed motor, only 25 percent of rated power is required. (Refer to the variable speed control curve on the Exhibit.) Therefore:

Annual Savings = (20 hp x 80% - 20 hp x 25%) x 6,000 hrs/yr x $0.041/hp-hr = $2,700

The reduction in fan output will result in operation of the electric motor at less than rated capacity. If the horsepower required at the reduced flow is less than about one third of rated horsepower, the potential savings for substitution of a smaller motor should also be investigated.

8.2.3 Variable Speed

If fan output must be varied but operates at reduced capacity much of the time, a variable drive should be evaluated. (See separate discussion on variable-speed drives.) Automatic variation of fan speed through fluid or magnetic couplings or variable-speed motors has limited application because of the high initial cost.

8.3 Air Compressors

Air compressors in manufacturing facilities are often large consumers of electricity. There are two types of air compressors: reciprocating and screw compressors. Reciprocating compressors operate in manner similar to that of an automobile engine. That is, a piston moves back and forth in a cylinder to compress the air. Screw compressors work by entraining the air between two rotating augers. The space between the augers becomes smaller as the air moves toward the outlet, thereby compressing the air.

Notes

Screw compressors have fewer moving parts than reciprocating compressors have and are less prone to maintenance problems. However, especially for older types of screw compressors, screw compressors tend to use more energy than reciprocating compressors do, particularly if they are oversized for the load. This is because many screw compressors continue to rotate, whereas reciprocating compressors require no power during the unloaded state.

This section includes energy conservation measures for increasing outside air usage, reducing air leakage around valves and fittings in compressor air lines, recovering air compressor cooling water, recovering air compressor waste heat, pressure reduction, adding screw compressor, controls, compressor replacement, and adding low-pressure blowers.

8.3.1 Waste Heat Recovery

For both screw and reciprocating compressors, approximately 60% to 90% of the energy of compression is available as heat, and only the remaining 10% to 40% is contained in the compressed air. This waste heat may be used to offset space heating requirements in the facility or to supply heat to a process. The heat energy recovered from the compressor can be used for space heating during the heating season. The amount of heat energy that can be recovered is dependent on the size of the compressor and the use factor. The use factor is the fraction of the yearly hours that the compressor is used. For this measure to be economically viable, the compressor should be located near the heat that is to be used.

Exhibit 8.9: Compressor Waste Heat Recovery: Costs and Benefits

Options[1]	Installed Costs ($)[2]	Energy Savings (MMBtu/yr)	Cost Savings ($/yr)[3]	Simple Payback (yr)
Waste Heat Recovery	2,098	676	2,786	0.8

1. Tabulated data were taken from the Industrial Assessment Center (IAC) database. All values are averages based on the database data. The implementation rate for this measure was 34%.
2. One example from the IAC database to further clarify the costs is as follows: The waste heat from a 75 hp screw compressor was used to heat the plant. The energy savings were 417 MMBtu/yr, the cost savings were $2,594/yr, and the implementation cost was $1,530 - giving a simple payback of seven months.
3. The energy cost savings are based on proposed dollar savings as reported to IAC from the center, which are usually almost identical to actual savings reported from the facility.

8.3.2 Operating Pressure Reduction

Demand and energy savings can be realized by reducing the air pressure control setting on an air compressor. In many cases, the air is compressed to a higher pressure than the air-driven process equipment actually requires. By determining the minimum required pressure, one may find that the pressure control setting on the compressor can be lowered. This is done by a simple adjustment of the pressure setting and applies to both screw and reciprocating compressors. The resulting demand and energy savings depend on the power rating of the compressor, the load factor, the use factor, the horsepower reduction factor, the current and proposed discharge pressures, the inlet pressure, and the type of compressor. The power reduction factor is the ratio of the proposed power consumption to the current power consumption base on operating pressure. The inlet pressure is the air pressure at the air intake to the compressor, usually local atmospheric pressure. This measure should only be considered when the operating pressure is greater than or equal to 10 psi higher than what is required for the equipment (with exception to situations with extremely long delivery lines or high pressure drops).

Notes

Exhibit 8.10: Pressure Reduction: Costs and Benefits

Options[1]	Installed Costs ($)[2]	Energy Savings (MMBtu/yr)	Cost Savings ($/yr)[3]	Simple Payback (yr)
Pressure Reduction	864	187	2,730	1.0

1. Tabulated data were taken from the Industrial Assessment Center (IAC) database. All values are averages based on the database data. The implementation rate for this measure was 48%.
2. One example from the IAC database to further clarify the costs is as follows: Reducing the air pressure control setting on a 75 hp air compressor from 115 psig to 100 psig resulted in energy savings of 22,500 kWh and cost savings of $1,180/yr. The implementation cost was $270, resulting in a simple payback of three months.
3. The energy cost savings is based on proposed dollar savings as reported to IAC from the center, which are usually almost identical to actual savings reported from the facility.

8.3.3 Elimination of Air Leaks

Air leaks around valves and fittings in compressor air lines may represent a significant energy cost in manufacturing facilities. Sometimes up to 20% of the work done by the compressor is to make up for air leaks. The energy loss as a function of the hole diameter at an operating pressure of 100 psi is shown in Exhibit 8.11. When determining the energy savings from elimination of air leaks, the gage and the absolute pressures are used in calculating the amount of air lost due to air leaks. The gage pressure is the system pressure supplied by the compressor and the absolute pressure is the sum of the gage pressure and the atmospheric pressure. A case study of this opportunity is presented in Appendix E.

Exhibit 8.11: Fuel and Air Losses Due to Compressed Air Leaks

Hole Diameter [in]	Free Air Wasted [ft3/yr] by a Leak of Air at 100 psi	Energy Wasted Per Leak [kWh/h]
3/8	90,400,000	29.9
1/4	40,300,000	14.2
1/8	10,020,000	3.4
1/16	2,580,000	0.9
1/32	625,000	0.2

Source: National Bureau of Standards

Rule of Thumb --=5%-10% of total energy consumption

Exhibit 8.12: Leakage Reduction: Costs and Benefits[1]

Options[1]	Installed Costs ($)[2]	Energy Savings (MMBtu/yr)	Cost Savings ($/yr)[3]	Simple Payback (yr)
Leak Reduction	934	230	3,540	0.3

1. Tabulated data were taken from the Industrial Assessment Center (IAC) database. All values are averages based on the database data. The implementation rate for this measure was 79%.
2. One example from the IAC database to further clarify the costs is as follows: Repairing air leaks in a compressed air system having air compressors of 150 hp, 60 hp and 25 hp-all operating at 110 psig-

Notes

resulted in energy savings of 35,750 kWh and cost savings of $2,760/yr. The implementation cost was $500.

3. The energy cost savings are based on proposed dollar savings as reported to IAC from the center, which are usually almost identical to actual savings reported from the facility.

Equations for Air Flow, Power Loss, and Energy Savings

The volumetric flow rate of free air exiting the hole is dependent upon whether the flow is choked. When the ratio of atmospheric pressure to line pressure is less than 0.5283, the flow is said to be choked (i.e., traveling at the speed of sound). The ratio of 14.7 psia atmospheric pressure to 129.7 psia line pressure is 0.11. Thus, the flow is choked. The volumetric flow rate of free air, V_f, exiting the leak under choked flow conditions is calculated as follows:

$$V_f = \frac{NL \times (T_i + 460) \times C_4 \times C_5 \times C_d \times \frac{pD^2}{4}}{D_6 \sqrt{T_l + 460}}$$

where

V_f = volumetric flow rate of free air, cubic feet per minute

NL = number of air leaks, no units

T_i = temperature of the air at the compressor inlet, °F

P_1 = line pressure at leak in question, psia

P_i = inlet (atmospheric) pressure, 14.7 psia

C_4 = isentropic sonic volumetric flow constant, 28.37 ft/sec-°R0.5

C_5= conversion constant, 60 sec/min

C_d = coefficient of discharge for square edged orifice , 0.8 no units

π = Pythagorean constant, 3.1416

D = leak diameter, inches (estimated from observations)

C_6 = conversion constant, 144 in^2/ft^2

T_1 = average line temperature, °F

The power loss from leaks is estimated as the power required to compress the volume of air lost from atmospheric pressure, P_i, to the compressor discharge pressure, P_o, as follows :

$$L = \frac{P_i \times C_6 \times V_f \times \frac{k}{k-1} \times N \times C_7 \times \left[\left(\frac{P_o}{P_i} \right)^{\frac{k-1}{k \times N}} - 1 \right]}{E_a \times E_m}$$

where

L = power loss due to air leak, hp

k = specific heat ratio of air, 1.4, no units

N = number of stages, no units

C_7 = conversion constant, 3.03 x 10-5 hp-min/ft-lb

P_o = compressor operating pressure, psia

E_a = air compressor isentropic (adiabatic) efficiency, no units

Notes

E_a = 0.88 for single stage reciprocating compressors

E_a = 0.75 for multi-stage reciprocating compressors

E_a = 0.82 for rotary screw compressors

E_a = 0.72 for sliding vane compressors

E_a = 0.80 for single stage centrifugal compressors

E_a = 0.70 for multi-stage centrifugal compressors

E_a = 0.70 for turbo blowers

E_a = 0.62 for Roots blowers 3

E_m = compressor motor efficiency, no units

The annual energy savings, *ES*, are estimated as follows:

$$ES = L \times H \times C_8$$

where

H = annual time during which leaks occurs, h/yr

C_8 = conservation factor, 0.002545 MMBtu/hp-h

The annual cost savings, *CS*, can be calculated as follows:

$$CS = ES \times \text{unit cost of eletricity}$$

Quantifying air leaks is relatively simple if the system can be shut down for 10 to 15 minutes and if there is an operating pressure gage in the system.

It is a good idea to ask plant personnel to shut down their compressors briefly (and close a valve near the compressor if the compressor begins to relieve the system pressure through and automatic bleed). It is important to assure that there are no plant processes taking air from the system at the time of this test--the only thing relieving the pressure should be leaks. If there is not an operating plant pressure gage in the system, a cheap one and a collection of bayonet fittings should be at hand so the gage can be attached to the end of one of the plant's supply hoses.

One should monitor the pressure decay as a function of time for about a 10 psi drop and then measure the sizes of the major receivers/accumulators and major air headers. The pressure drop test never takes more than 15 minutes, and usually less. Measuring the size of major receivers and air lines is a short job for an experienced student. Small lines (1.5 inch or less) can be ignored an leaving them out makes the result conservative.

Application of the perfect gas law will yield the leak rate in scfm. Then one can turn to a reference like the DOE/C/40520-TZ by Varigas Research to get compressor hp required per scfm. It is possible to correct the 100 psig data there to other pressures.

This is a much better procedure than listening for leaks and 'quantifying' them by ear as to such things as 'roar', 'gush', 'whisper', etc. because the leak rate is reasonably quantified in a conservative way. It has the disadvantage of leaving the Assessment Team clueless about the cost of repair, which must then be estimated. It is a good practice to listen for the big leaks and to try to see what is causing them to aid in eliminating costs.

This procedure, along with a couple of other common projects is covered in two recent publications:

"Five Common Energy Conservation Projects in Small- and Medium-Sized Industrial Plants," 15th National Industrial Energy Technology Conference," Houston, TX, March, 1993, by Darin W. Nutter, Angela J. Britton, and Warren M. Heffington, pp. 112-120.

Notes

The same article was rewritten for Chemical Engineering. The reference is:

"Conserve Energy to Cut Operating Costs," Chemical Engineering, September, 1993, pp. 126- 137, same authors.

8.3.4 Cooling Water Heat Recovery

Air compressors, 100 hp and larger, are often cooled by water from a cooling tower. The temperature of the water after leaving the cooling coils of the compressor may be sufficiently high that heat can be extracted from the water and used in a process. For example, boiler feed water could be preheated by using waste heat from water used to cool the compressor. Preheating make-up water displaces boiler fuel that would ordinarily be used to heat the make-up water.

Exhibit 8.13: Waste Water Heat Recovery: Costs and Benefits

Options[1]	Installed Costs ($)[2]	Energy Savings (MMBtu/yr)	Cost Savings ($/yr)[3]	Simple Payback (yr)
Water Waste Heat Recovery	16,171	3,306	14,676	1.1

1. Tabulated data were taken from the Industrial Assessment Center (IAC) database and represent HOT waste water rate for this measure was 41%.
2. One example from the IAC database to further clarify the costs is as follows: Installing a heat exchanger to recover heat from waste water to heat-incoming city water resulted in energy savings of 145 MMBtu/yr, cost savings of $777/yr, and an implementation cost of $2,600, giving a simple payback of 3.4 years.
3. The energy cost savings are based on proposed dollar savings as reported to IAC from the center, which are usually almost identical to actual savings reported from the facility.

8.3.5 Compressor Controls

Screw compressors may consume up to 80% of their rated power output when they are running at less than full capacity. This is because many screw compressors are controlled by closing throttling valves. The inlet throttling valve on a typical throttled-inlet, screw-type compressor is partially closed in response to a reduced air system demand. The pressure rise across the compression portion of the unit does not decrease to zero, and thus power is still required by the unit. Accordingly, an older unit will continue to operate at 80% to 90% and a new unit at 40% to 60% of its full load capacity horsepower. When several screw-type air compressors are being used, it is more efficient to shut off the units based on decreasing load than to allow the units to idle, being careful not to exceed the maximum recommended starts/hour for the compressor. Modular systems that conserve energy by operating several small compressors that are brought on-line as needed instead of operating one large compressor continuously are often found in retrofit and new installations.

Exhibit 8.14: Screw Compressor Controls: Costs and Benefits

Options[1]	Installed Costs ($)[2]	Energy Savings (MMBtu/yr)	Cost Savings ($/yr)[3]	Simple Payback (yr)
Modify Screw Compressor Controls	3,463	342	5,074	0.7

1. Tabulated data were taken from the Industrial Assessment Center (IAC) database. All values are averages based on the database data. The implementation rate for this measure was 48%.

Notes

2. One example from the IAC database to further clarify the costs is as follows: Installing controls on a 100 hp compressor resulted in energy savings of 128,600 kWh and a cost savings of $6,750/yr, at an implementation cost of $1,500.
3. The energy cost savings are based on proposed dollar savings as reported to IAC from the center, which are usually almost identical to actual savings reported from the facility.

8.3.6 Outside Air Usage

The amount of work done by an air compressor is proportional to the temperature of the intake air. Less energy is needed to compress cool air than to compress warm air. On average, outside air is cooler than in inside a compressor room. This is often the case even on very hot days. Piping can often be installed so that cooler outside air can be supplied to the intake on the compressor. This is particularly simple and cost-effective if the compressor is located adjacent to an exterior wall.

The energy and cost savings are dependent on the size of the compressor, the load factor, and the number of hours during which the compressor is used. The load factor is the average fraction of the rated load at which the compressor operates. The payback period is nearly always less than two years. The load factor is fairly constant for compressors that operate only when they are actually compressing air. Most reciprocating compressors are operated in this manner. When on, they operate with fairly constant power consumption, usually nearly equal to their rated power consumption; when they are cycled off, the power consumption is zero. Screw compressors are often operated in a different manner. When loaded (i.e., actually compressing air), they operate near their rated power, but when compressed air requirements are met, they are not cycled off but continue to rotate and are "unloaded." Older screw compressors may consume as much as 85% of their rated power during this unloaded state. Therefore, if a screw compressor is to be operated continuously, it should be matched closely to the compressed air load that it supplies. Often, plant personnel purchase compressors having several times the required power rating. This may be done for a variety of reasons, but often in anticipation of expansion of the facility and a commensurate increase in the compressed air requirements.

Exhibit 8.15: Outside Air Usage: Costs and Benefits

Options[1]	Installed Costs ($)[2]	Energy Savings (MMBtu/yr)	Cost Savings ($/yr)[3]	Simple Payback (yr)
Outside Air Usage	593	82	1,246	0.5

1. Tabulated data were taken from the Industrial Assessment Center (IAC) database. All values are averages based on the database data. The implementation rate for this measure was 52%.
2. One example from the IAC database to further clarify the costs is as follows: Supplying outside air to the intakes of three air compressors (100 hp, 75 hp, and 50 hp) resulted in energy and cost savings of 10,050 kWh and $490/ yr. The implementation cost was $780.
3. The energy cost savings are based on proposed dollar savings as reported to IAC from the center, which are usually almost identical to actual savings reported from the facility.

8.3.7 Compressor Replacement

It is often advantageous to install a smaller compressor to more closely match the compressed air requirements normally met by oversized or large compressors, for processes that have periods of low compressed air usage. A smaller compressor will reduce energy usage and associated costs because the smaller compressor will operate at a better efficiency than the larger compressor when air requirements are low. Generally pre-1975 stationary screw-type compressors, if oversized for the load, will run unloaded much of the time when the load is low. They are unloaded by closing the inlet valve and hence are referred to as modulating inlet type compressors. Based on manufacturers' data, these compressors can consume as much as 85% of the full load horsepower when running unloaded. Some pre- and post-1975 compressor manufacturers have developed systems that close the inlet valve but also release the oil reservoir pressure and

Notes

reduce oil flow to the compressor. Other strategies have also been developed but are not usually found on older (pre-1975) screw-type compressors. The unloaded horsepower for screw compressors operating with these types of systems typically ranges from 80% to 90% of the full load horsepower for older compressors and from 40% to 60% for newer compressors, depending on the particular design and conditions. In any event, if the compressed air requirements are reduced during particular periods (such as a third shift), but are not eliminated entirely, then installing a smaller compressor to provide the air requirements during these periods can be cost-effective.

Exhibit 8.16: Optimum Sized Equipment: Costs and Benefits

Options[1]	Installed Costs ($)[2]	Energy Savings (MMBtu/yr)	Cost Savings ($/yr)[3]	Simple Payback (yr)
Compressor Replacement	11,826	975	9,828	1.2

1. Tabulated data were taken from the Industrial Assessment Center (IAC) database. All values are averages based on the database data. The implementation rate for this measure was 39%.
2. One example from the IAC database to further clarify the costs is as follows: A manufacturer of computer peripheral equipment replaced a 200 hp air compressor with a 75 hp air compressor. The energy savings were $61,850 kWh and the cost savings were $2,725. The implementation costs were $4,000.
3. The energy cost savings are based on proposed dollar savings as reported to IAC from the center, which are usually almost identical to actual savings reported from the facility.

8.3.8 Low-Pressure Blowers

Compressed air is sometimes used to provide agitation of liquids, to control vibration units for material handling (as air lances), and for other low-pressure pneumatic mechanisms. For such purposes, it is more efficient to use a blower to provide the required low-pressure air stream. Use of low-pressure air from the blower would reduce energy consumption by eliminating the practice of compressing air and then expanding it back to low pressure for use.

Exhibit 8.17: Reduce Compressed Air Usage: Costs and Benefits[1]

Options[1]	Installed Costs ($)[2]	Energy Savings (MMBtu/yr)	Cost Savings ($/yr)[3]	Simple Payback (yr)
Low Pressure Blowers	3,023	404	5,677	0.5

1. Tabulated data were taken from the Industrial Assessment Center (IAC) database. All values are averages based on the database data. The implementation rate for this measure was 54%.
2. One example from the IAC database to further clarify the costs is as follows: A plating facility added a low pressure blower. The energy savings were $41,000 kWh/yr and the cost savings were $3,200/yr. The implementation cost was $5,000.
3. The energy cost savings are based on proposed dollar savings as reported to IAC from the center, which are usually almost identical to actual savings reported from the facility.

8.3.9 General Notes on Air Compressors

1. Screw units use 40-100% of rated power unloaded.
2. Reciprocating units are more efficient, more expensive.

Notes

3. About 90% of energy consumption becomes heat (10%).
4. RULE OF THUMB: Roughly 20 hp per 100 cfm @ 100 psi.
5. Synchronous belts generally are not appropriate (cooling fins, pulley size).
6. Use low pressure blowers vs. compressed air whenever possible (agitation, heat guns, pneumatic transfer, etc.).
7. Cost of air leaks surprisingly high.
8. Second, third, weekend shifts may have low air needs that could be served by smaller compressor.
9. Outside air is cooler, denser, easier to compress than warm inside air.
10. Using synthetic lubricants can reduce friction.
11. Older compressors are driven by older, less efficient motors.
12. Compressors may be cooled with chilled water or have reduced condenser capacity.

REFERENCES

1. Compressed Gas Association, Handbook of Compressed Gases, Reinhold, 1966
2. White, F.G., Industrial Air Compressors, Foulis, 1967
3. Janna, W.S., Introduction to Fluid Mechanics, PWS Publishing Company, 1993
4. Wolanski, W., Negoshian, J., and Henke, R., Fundamentals of Fluid Power, Houghton Miffin, 1977
5. Anderson B., The Analysis and Design of Pneumatic Systems, John Wiley and Sons, 1967
7. Fluid Power Handbook and Directory, Hydraulics And Pneumatics, 1994
8. Marks' Standard Handbook for Mechanical Engineers, McGraw-Hill, 1987
9. Vacuum and Pressure Systems Handbook, Gast Manufacturing Corporation, 1986
10. A.H. Shapiro, The Dynamics and Thermodynamics of Compressible Fluid Flow, Vol 1, Ronald Press, NY, 1953, p. 100.
11. Chapters 10 and 11, Compressed Air and Gas Handbook, Fifth Edition, Compressed Air and Gas Institute, New Jersey, 1989.
12. Varigas Research, Inc., Compressed Air Systems, A Guidebook on Energy and Cost Savings, Timonium, MD, 1984.
13. National Technical Information Service, Compressed Air Systems, A Guidebook on Energy and Cost Savings, #DOE/CS/40520-T2, March 1984.
14. American Consulting Engineers' Council, Industrial Market and Energy Management Guide, SIC 32, Stone, Clay and Glass Products Industry, Washington, D.C. 1987, P. III-30.
15. Turner, et. al., Energy Management Handbook, John Wiley and Sons, New York, NY, 1982, pp. 424-425.
16. Witte, L.C., P.S. Schmidt, D.R. Braun, Industrial Energy Management and Utilization, Hemisphere Publishing Corp., Washington, D.C., 1988, pp. 433 – 437.
17. Baumeister, T., L.S. Marks, eds., Standard Handbook for Mechanical Engineers, 7th Edition, McGraw-Hill Book Co., New York, NY, 1967, pp. 14.42 – 14.61.

CHAPTER 9. THERMAL APPLICATIONS

Notes

This chapter discusses thermal applications and equipment such as cooling towers, adsorption refrigeration, mechanical refrigeration, and insulation. A description of each application and equipment, its general uses, operation, and common opportunities for energy conservation are presented.

9.1 Cooling Systems

For process cooling it is always best from the standpoint of energy conservation to use the lowest form of energy first. That is, for a piece of equipment or a process that is air cooled, first use outside air (an economizer) if the outside air temperature is low enough. The next step, in appropriate climates, would be to use direct evaporative cooling. This is a process in which air passing through water droplets (a swamp cooler) is cooled, as energy from the air is released through evaporation of the water. Evaporative cooling is somewhat more energy intensive than the economizer but still provides some relatively inexpensive cooling. The increase in energy use is due to the need to pump water. Indirect evaporative cooling is the next step up in energy use. Air in a heat exchanger is cooled by a second stream of air or water that has been evaporatively cooled, such as by a cooling tower and coil. Indirect evaporative cooling may be effective if the wet-bulb temperature is fairly low. The wet-bulb temperature is the temperature indicated by a thermometer for which the bulb is covered by a film of water. As the film of water evaporates, the bulb is cooled. High wet-bulb temperatures correspond to higher air saturation conditions. For example, dry air has the ability to absorb more moisture than humid air, resulting in a lower, wet-bulb temperature.

Indirect evaporative cooling involves both a cooling tower and swamp cooler, so more energy will be used than for the economizer and evaporative cooling systems because of the pumps and fans associated with the cooling tower. However, indirect cooling systems are still less energy intensive than systems that use a chiller. The final step would be to bring a chiller on line.

Many plants have chillers that provide cooling for various plant processes. Chillers consist of a compressor, an evaporator, an expansion valve, and a condenser. Chillers are classified as reciprocating chillers, screw chillers, or centrifugal chillers, depending on the type of compressor used. Reciprocating chillers are usually used in smaller systems (up to 25 tons [88 kW]) but can be used in systems as large as 800 tons (2800 kW). Screw chillers are available for the 80 tons to 800 tons range (280 kW to 2800 kW) but are normally used in the 200 tons to 800 tons range (700 kW to 2800 kW). Centrifugal chillers are available in the 200 tons to 800 tons range and are also used for very large systems (greater than 800 tons [2800 kW]). The evaporator is a tube-and-shell heat exchanger used to transfer heat to evaporate the refrigerant. The expansion valve is usually some form of regulating valve (such as a pressure, temperature, or liquid-level regulator), according to the type of control used. The condenser is most often a tube-and-shell heat exchanger that transfers heat from the system to the atmosphere or to cooling water.

This section contains information pertaining to cooling systems, particularly chiller systems. Refer to Brief #4 "Outside Air Economizers," Brief #5, "Evaporative Cooling," Brief #6, "Cool Storage," and Brief #7, "Heat Recovery from Chillers" in DSM Pocket Guidebook, Volume 2: Commercial Technologies for information relating to cooling systems that may be found in industry. Topics discussed in this section include condenser water and chilled water temperature reset at the chiller, hot-gas defrost of chiller evaporator coils, and two-speed motors for cooling tower fans.

9.1.1 Cooling Towers

The most common types of cooling towers dissipate heat by evaporation of water that is trickling from different levels of the tower. Usually the water is sprayed into the air, so the evaporation is easier. Cooling towers conserve water, prevent discharge of heated water into natural streams and also avoid treating large amount of make-up water. The wet-bulb temperature should not exceed the maximum expected temperature, which occurs in the summer. In the past, most cooling towers were atmospheric. They relied on natural air circulation, making them not very efficient in their cooling capacity. In addition, high pumping heads were required to force the water to a certain height and let it run down on the system of platforms after spraying. The spray losses were substantial and make-up water was required in significant amounts. Exhibit 9.1 gives an example of two types of towers and their energy requirements.

Notes

Three types of towers are widely used today. Mechanical forced-draft towers (see Exhibit 9.2), induced draft towers (see Exhibit 9.3) and hyperbolic. Mechanical forced-draft is designed to provide an air supply at ground level and at amounts that are easily controlled by fans. Unfortunately, there are some problems with this design as well. Firstly, it is a non-uniform distribution of air over the area.

Exhibit 9.1: Comparison of F.D. Blower Tower vs. Propeller Tower for 400 Tons

Cooling Tower Type	Operating Fan Motor (hp)	Fan Motor kW[1]	Tower Pump Head ft[2]	Additional Pump Motor kW[3]	Total Operating kW
Counter flow with Blower	40	32.4	23	6.9	39.3
Crossflow w/Propeller	20	16.2	10	3.0	19.2

1. Fan and pump motor efficiencies assumed to be 92%.
2. That portion of total pump attributable to the cooling tower; sum of static lift plus losses in tower's internal water distribution system.
3. Pump efficiency assumed to be 82%.

Exhibit 9.2: Mechanical Forced-Draft Cooling Tower

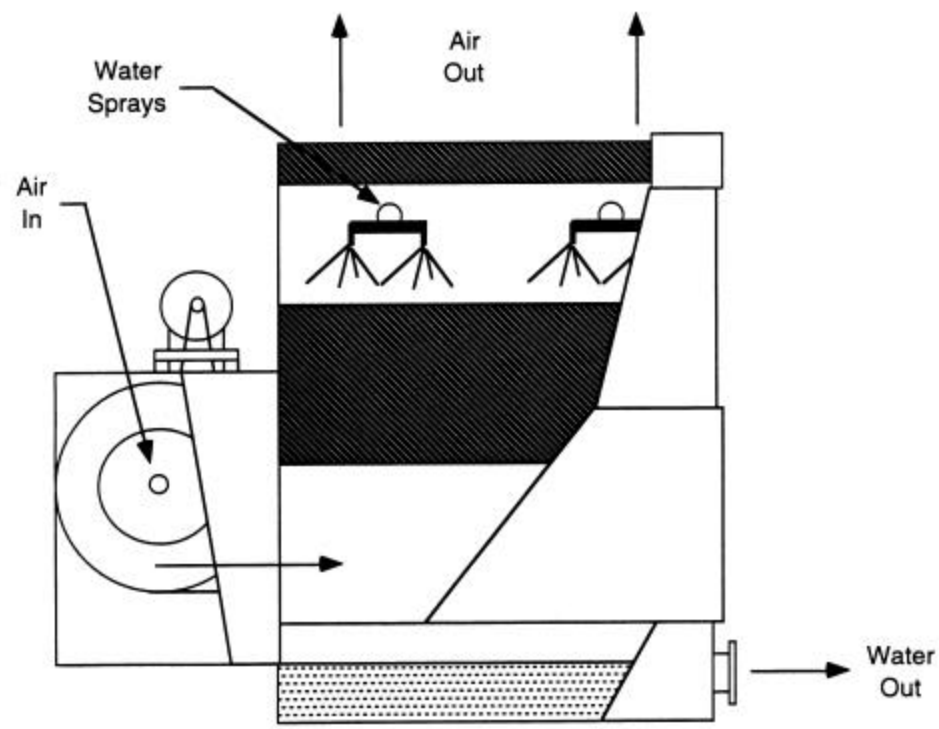

Secondly, the vapor is recirculated from the discharge into the inlet causing ice formation on the blades of draft fans, when the temperatures drop low enough in the winter months. Thirdly, the physical limitations of the fan size might prove a problem.

In case of induced-draft towers the fan mounted on the top of the roof. This arrangement improves air distribution and less make-up water is needed. The hyperbolic tower is based on the chimney effect. The effect of the chimney eliminates the need for fans that are necessary for both induced-draft and mechanical forced-draft cooling towers. If the tower is of a substantial height, above

250 feet, the tower orientation should be with the broad side to the winds that are prevailing in the region. Shorter towers should have long axis parallel to the prevailing winds.

Notes

Exhibit 9.3: Induced Draft Cooling Tower

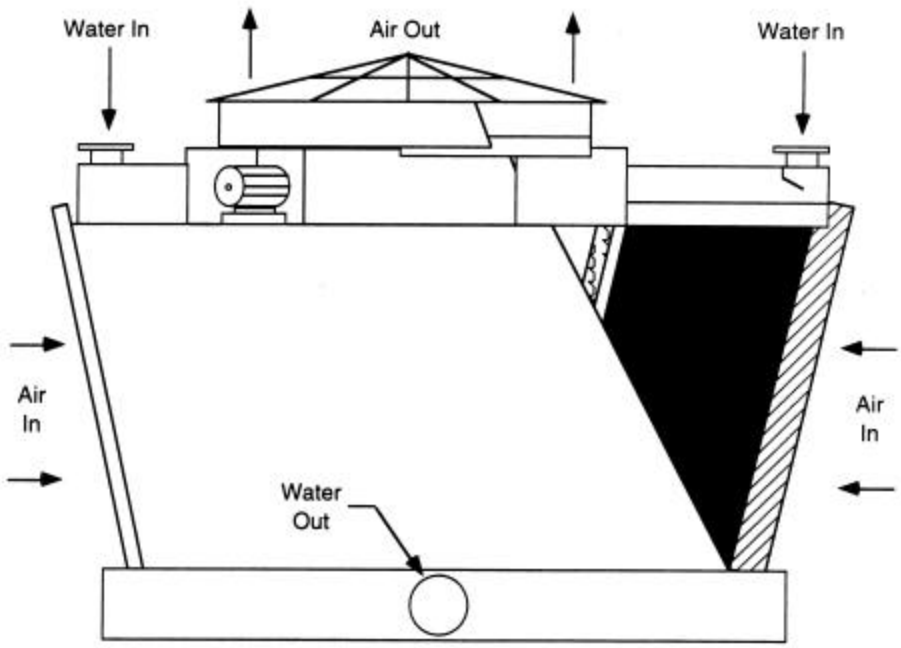

Exhibit 9.4: Free Cooling/Air Preheat

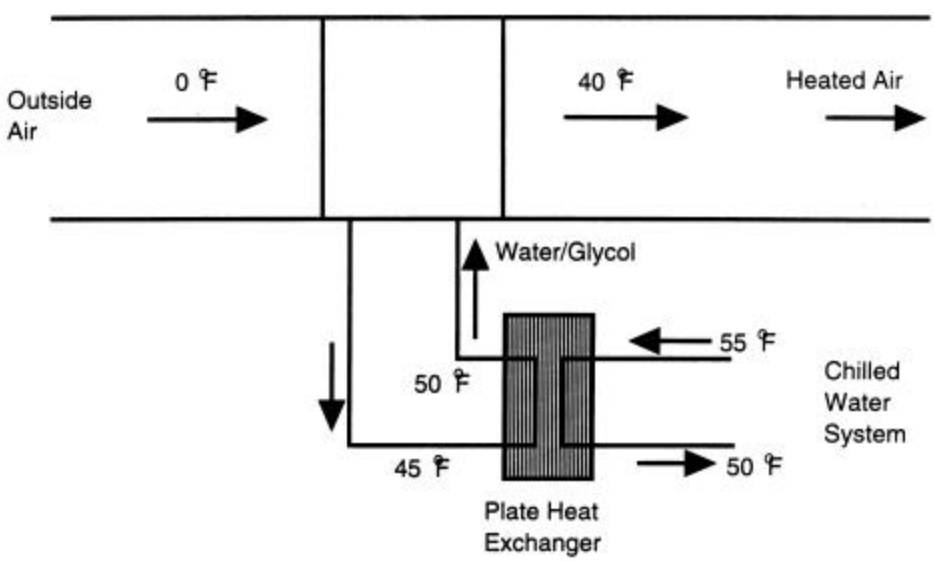

Notes

Exhibit 9.5: Indirect Free Cooling Loop

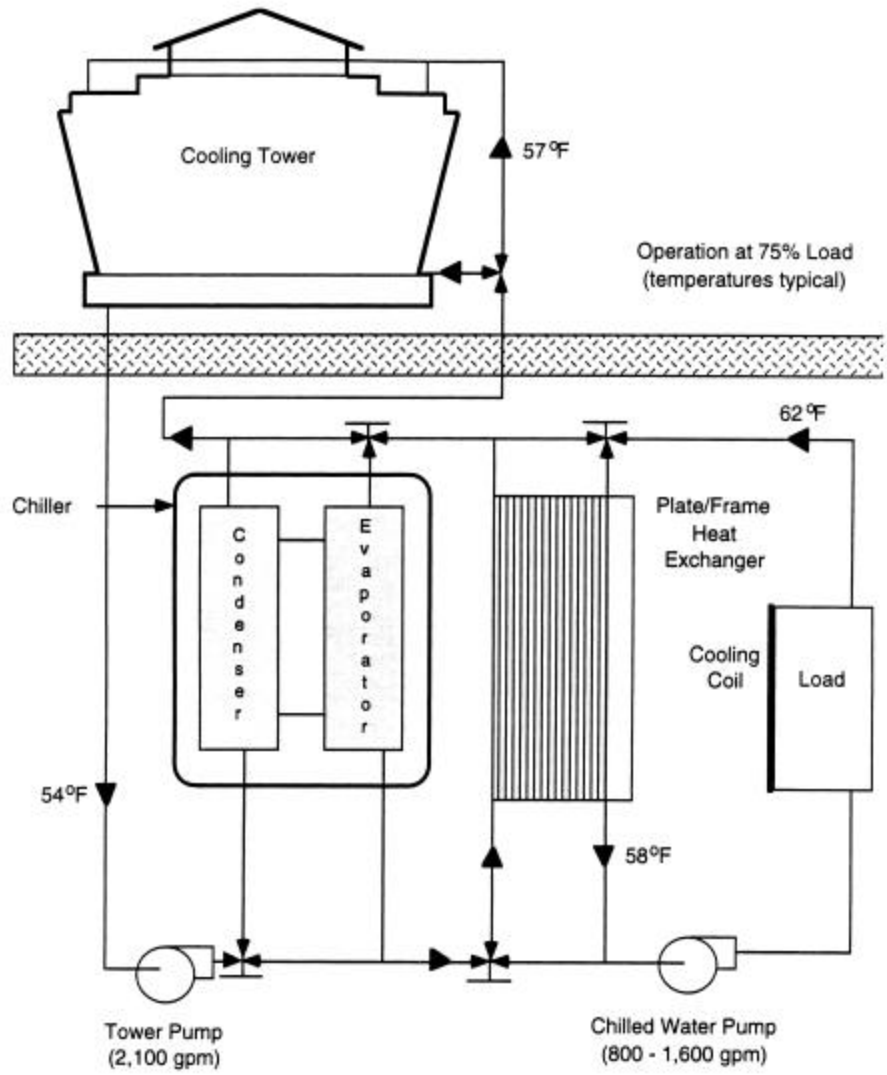

Exhibit 9.6: Free Cooling (Water Side Economizer) Define Operating Conditions

	Peak Load Design Conditions	**Off Season Design Conditions**	
Comfort Cooling Data Processing	700 Tons 300Tons	200Tons 300 Tons	
Total Load	1000 Tons	500 Tons	
		Alternate Number 1	**Alternate Number 2**
Flow Rate	2400 GPM	1200 GPM	2400 GPM
Returning Temperature	55ºF	60ºF	60ºF
Leaving Temperature	45ºF	50ºF	55ºF

Notes

9.1.2 Typical Performance Improvements

The improvements in the area of cooling water are listed in this section. The thorough understanding of the operation and knowing all local conditions (temperatures, prevailing winds etc.) are the key for being able to make a valuable contribution.

9.1.2.1 Condenser Water Temperature Adjustment

The power consumption of any chiller increases as the condensing water temperature rises. Condensing water is water that has been cooled in a cooling tower to be used to condense vaporized refrigerant in the condenser. This is because, as the condenser temperature increases, the pressure rise across the compressor increases and, consequently, the work done by the compressor increases. Condensing water temperature set points are typically in the range between 65°F and 85°F, but can be as low as 60°F. In many cases the setpoint temperature is in the middle of the range, at abou
of thumb is that there is a 0.5% improvement in chiller efficiency for each degree Fahrenheit decrease in the setpoint temperature for the condenser water. The improvement tends to be higher near the upper range of setpoint temperatures and decreases as the setpoint temperature decreases. The amount of allowable decrease in the setpoint temperature must be determined by a detailed engineering analysis. This analysis should include the following: the system capacity, minimum requirements for the plant process served by the condenser water system, and number of hours per year that the wet bulb temperature is below a given value.

Exhibit 9.7: Condenser Water Supply Temperature Reset: Costs and Benefit

Options[1]	Installed Costs ($)[2]	Energy Savings (MMBtu/yr)	Cost Savings ($/yr)[3]	Simple Payback (yr)
Condenser	2,678	489	6,217	0.4

1. Tabulated data were taken from the Industrial Assessment Center (IAC) database. All values are averages based on the database data. The implementation rate for this measure was 67%.
2. One example from the IAC data base to further clarify the costs is as follows: Resetting the condenser water temperature an electronics plant resulted in energy and cost savings of 58,218 kWh/yr and $2,390/yr. The implementation cost was $200.
3. The energy cost savings are based on proposed dollar savings as reported to IAC from the center, which are usually almost identical to actual savings reported from the facility.

9.1.2.2 Chilled Water Supply Temperature Adjustment

The efficiency of chillers increases as the chilled water temperature increases. This is because, in order to obtain lower chilled water temperature, the refrigerant must be compressed at a higher rate, which in turn increases the compressor power requirements and decreases the efficiency of the chiller. There is approximately a 1% increase in efficiency for each degree Fahrenheit increase in the chilled water setpoint temperature. The efficiency increase tends to be higher near the lower temperatures in the setpoint range and decreases as the setpoint temperature increases. The amount of allowable increase must be determined by a detailed engineering analysis that evaluates the load requirements from the chiller, the design chilled water temperature, and other aspects of the system. It is not uncommon to find chilled water setpoints that are lower than is required from industrial chillers.

Exhibit 9.8: Chilled Water Supply Temperature Reset: Costs and Benefits

Options[1]	Installed Costs ($)[2]	Energy Savings (MMBtu/yr)	Cost Savings ($/yr)[3]	Simple Payback (yr)
Condenser Water Supply Temp Reset	766	384	4,449	0.2

Notes

1. Tabulated data were taken from the Industrial Assessment Center (IAC) database. All values are averages based on the database data. The implementation rate for this measure was 57%.
2. One example from the IAC data base to further clarify the costs is as follows: Resetting the chilled water temperature in a manufacturing plant resulted in energy savings of 39 MMBtu/yr., a cost savings of $537/yr, and no implementation cost, thus giving an immediate payback.
3. The energy cost savings are based on proposed dollar savings as reported to IAC from the center, which are usually almost identical to actual savings reported from the facility.

9.1.2.3 Variable Speed (or Two-Speed) Motors for Cooling Tower Fans

Cooling tower performance is affected by the outdoor wet-bulb temperature. Higher wet-bulb temperatures correspond to higher air saturation temperatures. As air loses the ability to extract heat from water droplets flowing through a cooling tower (increasing wet-bulb temperature), a higher air flow rate is required to remove the desired amount and reduce the condenser water to the design temperature. The cooling water fan motor is often sized to perform under design conditions (i.e., full water flow rate at maximum air flow rate and design wet-bulb temperature). During periods of lower outdoor wet-bulb temperature, the design amount of cooling can be obtained with lower air flow rates. As the air flow rate decreases, the fan speed and the motor power requirements also decrease. It may then be beneficial to install a two-speed motor for the cooling tower fan to reduce the fan motor power consumption. Two-speed motors may be part of new or retrofit construction. Savings for the addition of a two-speed fan motor are estimated based on the number of hours per year that the wet-bulb occur at various temperature ranges between design wet-bulb and minimum wet-bulb temperatures and the power requirements for various air flow rates. It should also be noted that variable speed drives for fan motors achieve cooling tower energy savings in the same manner as two-speed motors.

Exhibit 9.9: Two-Speed Motors on Cooling Tower Fans: Costs and Benefits[1]

Options[1]	Installed Costs ($)[2]	Energy Savings (MMBtu/yr)	Cost Savings ($/yr)[3]	Simple Payback (yr)
Two Speed Motors on Cooling Tower Fans	4,179	164	2,400	1.7

1. Tabulated data were taken from the Industrial Assessment Center (IAC) database in 1994. Today the database does not have a separate category for this item. The implementation rate for this measure was 20%.
2. One example from the IAC data base to further clarify the costs is as follows: Installing two-speed motors on the cooling towers at a plastic film extrusion plant resulted in energy and cost savings of 58,335 kWh/yr and $2,680/yr. The implementation cost was $8,900.
3. The energy cost savings are based on actual dollar savings as reported to IAC from the facility when compared to one-speed motors.

9.1.2.4 Hot Gas Defrost

Frost builds up on air cooler unit (freezer) evaporator coils when the unit operates at less than 32°F. Frost is the result of moisture in the air freezing to the coil as the air passes over the coil. The performance of the coil is adversely affected by frost. Frost acts as an insulator and reduces the heat transfer capability of the coil, and it restricts airflow through the coil. Frost buildup is unavoidable and must be removed periodically from the coil.

One method of frost removal is to use the hot refrigerant discharge gas leaving the compressor. During the defrost cycle, hot gas is circulated through the coil to melt the frost. Hot-gas defrost systems

Notes

may be used for all cooling unit capacities and may be included in new or retrofit construction. For retrofit applications, hot-gas defrost systems most often replace electric resistance defrost systems. Using waste heat off the hot-gas side for defrost may result in savings on the order of 10% to 20% of the total system usage.

Exhibit 9.10: Temperature vs. Time of Blower Operation

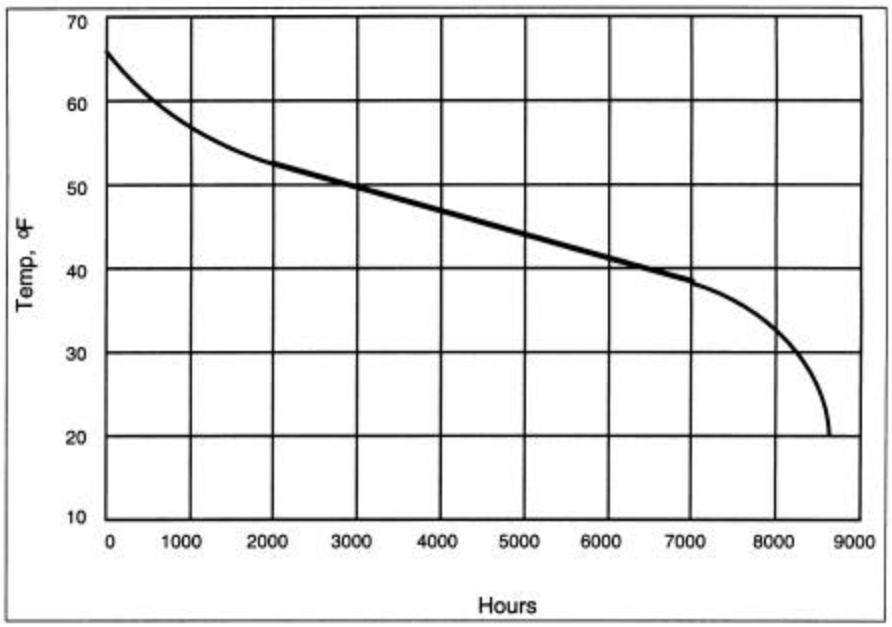

Exhibit 9.11: Evaporator Coils Defrost: Costs and Benefits

Options[1]	Installed Costs ($)[2]	Energy Savings (MMBtu/yr)	Cost Savings ($/yr)[3]	Simple Payback (yr)
Hot Gas Defrost	9,750	489	6,656	1.4

1. Tabulated data were taken from the Industrial Assessment Center (IAC) database All values are averages based on the database data.
2. One example from the IAC database to further clarify the costs is as follows: Installing a hot-gas defrost system in a dairy resulted in energy and cost savings of 20,500 kWh/yr. and $1,070/yr. The implementation cost was $2,500.
3. The energy cost savings are based on proposed dollar savings as reported to IAC from the center, which are usually almost identical to actual savings reported from the facility.

9.2 Absorption Refrigeration

Packaged absorption liquid chillers are used to produce chilled liquid for air-conditioning and industrial refrigeration processes. The chillers are usually powered by low-pressure steam or hot water, which can be supplied by the plant boiler or by waste heat from a process.

Where prime energy is needed, mechanical refrigeration is usually preferable. The conditions that favor the application of absorption refrigeration are the availability of a source of waste heat. Absorption refrigeration may also have application in special situations, as for example a high electrical demand charge with a ratchet clause in the rate schedule.

Notes

9.2.1 Operation

In the absorption cycle, two distinct chemicals are used and the cycle is driven by heat. The most common absorption system fluids are water as the volatile fluid and lithium bromide brine as the absorber fluid. Exhibit 9.12 illustrates the operation of a two-stage absorption chiller. Refrigerant enters the top of the lower shell from the condenser section and mixes with refrigerant being supplied from the refrigerant pump. Here the liquid sprays over the evaporator bundle. Due to the low vacuum (6 mm Hg) some of the refrigerant liquid vaporizes, cooling the refrigerant water to a temperature that corresponds closely to the shell pressure.

Exhibit 9.12: Two-Stage Absorption Chiller

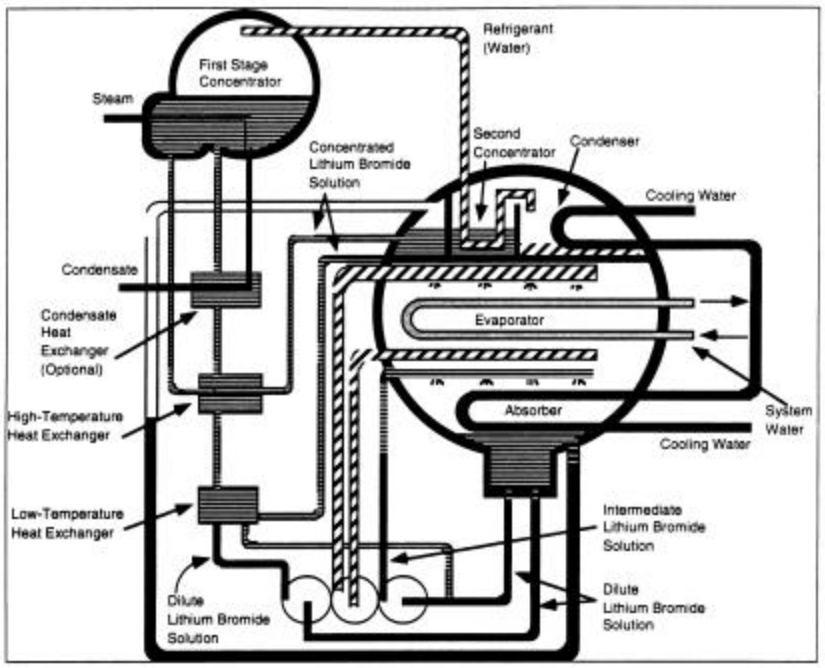

As the refrigerant vapor/liquid migrates to the bottom half of the shell, a concentrated solution of liquid bromide is sprayed into the flow of descending refrigerant. The hygroscopic action between lithium bromide (a salt with an especially strong attraction for water) and water--and the related changes in concentration and temperature--result in the extreme vacuum in the evaporator directly above.

Dissolving lithium bromide in water also gives off heat that is removed by the cooling water. The resultant dilute lithium bromide solution collects in the bottom of the absorber where it flows down to the solution pump.

The dilute mixture of lithium bromide and refrigerant vapor is pumped through the heat exchangers, where it is preheated by a hot, concentrated solution from the concentrators (generators). The solution then flows to the first-stage concentrator where it is heated by an external heat source of steam or hot water. The condenser water used in the absorber and the condenser is normally returned to a cooling tower.

The vapor is condensed in the second concentrator where the liquid refrigerant flows to the lower shell and is once again sprayed over the evaporator. The concentrated solution of lithium bromide from the concentrators is returned to the solution pump where it is recycled to the absorber.

The degree of affinity of the absorbent for refrigerant vapor is a function of the concentration and temperature of the absorbent solution. Accordingly, the capacity of the machine is a function of the temperature of the heat source and cooling water (see Exhibit 9.13).

Two-stage absorption requires higher water temperature or steam pressure, but because no additional heat is required in the second concentrator, two-stage absorption machines are 30 percent to 40 percent more

Notes

efficient. However, two-stage absorption machines cost significantly more than single-stage absorption units on an equal tonnage basis.

9.2.1.1 Capacity

Modern absorption refrigeration units range in capacity from about 100 tons to 1,600 tons for chilled water service. Most ratings are based on a minimum chilled water outlet temperature of 40°F, a minimum condenser water temperature of 70°F at the absorber inlet, and a generator steam pressure of 12 psig. Hot water or hot process fluids can be used in lieu of steam for the generator; however, the fluid inlet temperature must be at least 240°F for maximum capacity.

Exhibit 9.13: Capacity as Function of Temperature of Heat Source and Cooling Water

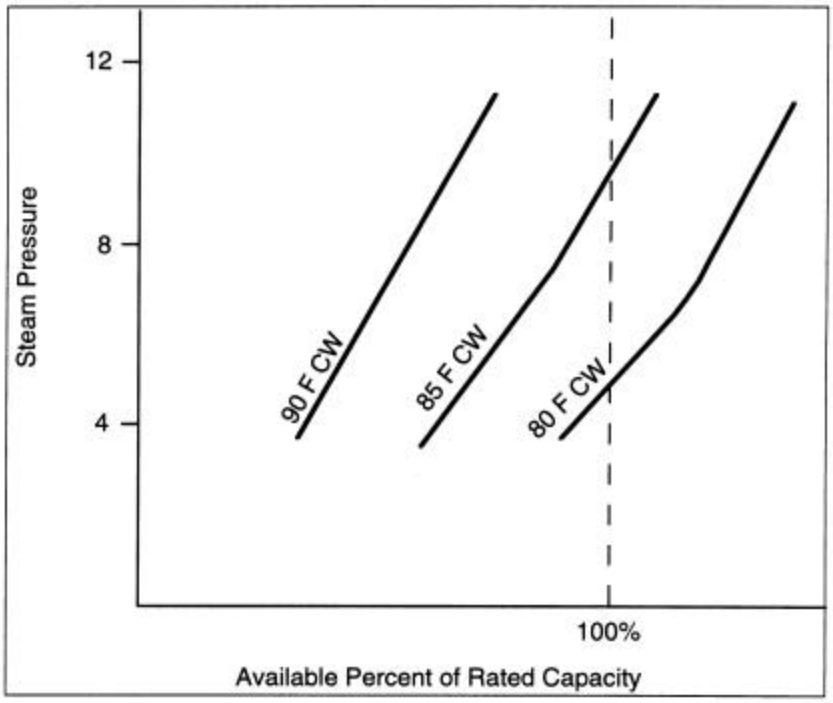

9.2.1.2 Operating Problems

Air in leakage can be a serious operating problem. Every effort must be made to keep the system airtight, as even very small leaks can cause problems and are difficult to detect. Air entering the machine causes

- The lithium bromide solution to become highly corrosive to metals.
- The lithium bromide solution to crystallize.
- The chilled water temperature to increase.
- Refrigeration capacity to decrease.

Crystallization occurs when the lithium bromide solution does not go through the normal dilution cycle. When this happens, the solution becomes so concentrated that it crystallizes and plugs the solution lines. The unit must then be shut down and decrystallized. Crystallization can be caused by a power failure, controller malfunction, extreme variations in the condenser water temperature, or operator error in inadvertently allowing air to enter the machine. It is indicated by a rise in the outlet chilled-water temperature, a loss of solution pump (or a noisy solution pump), a loss of solution level in the absorber, and generator flooding.

Notes

Although absorption refrigeration machines are generally more difficult to operate and require more maintenance than reciprocating and centrifugal machines, they allow waste stream to be utilized more efficiently and in the proper application can result in substantial energy savings.

9.2.1.3 Direct-Fired Two-Stage Absorption Refrigeration

A recent development is the use of direct gas firing or waste heat as the energy source in lieu of steam. The gas stream must be 550°F for use in this application. Possible sources are drying ovens, heat-treating facilities, paint-baking ovens, process ovens, or any process which gives off a clean, high-temperature exhaust gas. A special advantage of this unit is that it can be directly integrated into a packaged cogeneration system.

Exhibit 9.14: Cost Comparison of Mechanical and Absorption Refrigeration

Mechanical Refrigeration	
Typical hp required Cost/ton-hr	=1hp/ton =$0.041
Absorption Refrigeration	
Typical Steam Required for single-stage Cost/ton-hr	=18 lbs @ 14 psig/ton =18 lbs/hr x $4.01/M lbs steam = $0.072
Typical steam required for two-stage Cost/ton-hr	=12 lbs/hr @ 14 psig/ton = 12 lbs/hr x $4.01/M lbs. Steam =$0.048
Typical gas required for direct-fired, two-stage Cost/ton-hr	=13,000 Btu/ton =13,000 Btu/hr x $3.00/MMBtu = $0.039

Exhibit 9.14 shows a cost comparison of mechanical vs. absorption refrigeration. The attractiveness of absorption refrigeration depends on the relative cost of electricity and fuel if prime energy is used, or the availability of waste heat, which requires no prime energy. With the unit costs selected for the manual, the two-stage absorption is slightly more costly to operate than mechanical refrigeration. Where waste heat can be utilized, absorption refrigeration is, of course, the obvious choice.

In considering the use of waste heat for absorption refrigeration, it is worth a reminder that the first step should be to determine whether reducing or eliminating the waste heat is possible. A common application is the use of absorption refrigeration to utilize steam vented to atmosphere. However, in most cases a thorough study of the steam system will identify means of balancing the system to eliminate the loss of steam.

9.3 Mechanical Refrigeration

Refrigeration machines provide chilled water or other fluid for both process and air conditioning needs. Of the three basic types of refrigeration systems (mechanical compression, absorption, and steam jet), mechanical compression is the type generally used. The other two have application only in special situations.

Absorption refrigeration is discussed in the previous section. The energy requirements of the steam jet refrigeration unit are high when compared with those for mechanical compression; therefore, the use of steam jet refrigeration is limited to applications having very low cost steam at 125 psig, a low condenser water cost, and a high electrical cost. With today's energy costs, this type of system is rarely economical.

9.3.1 Mechanical Compression

The mechanical compression refrigeration system consists of four basic parts; compressor, condenser, expansion device, and evaporator. The basic system is shown in Exhibit 9.15. A refrigerant, with suitable characteristics, is circulated within the system. Low-pressure liquid refrigerant is evaporated in the

Notes

evaporator (cooler), thereby removing heat from the warmer fluid being cooled. The low-pressure refrigerant vapor is compressed to a higher pressure and a correspondingly higher saturation temperature. This higher pressure and temperature vapor is condensed in the condenser by a cooling medium such as cooling tower water, river water, city water, or outdoor air. The higher pressure and temperature refrigerant liquid is then reduced in pressure by an expansion device for delivery to the evaporator.

Exhibit 9.15: Mechanical Compression Refrigeration System

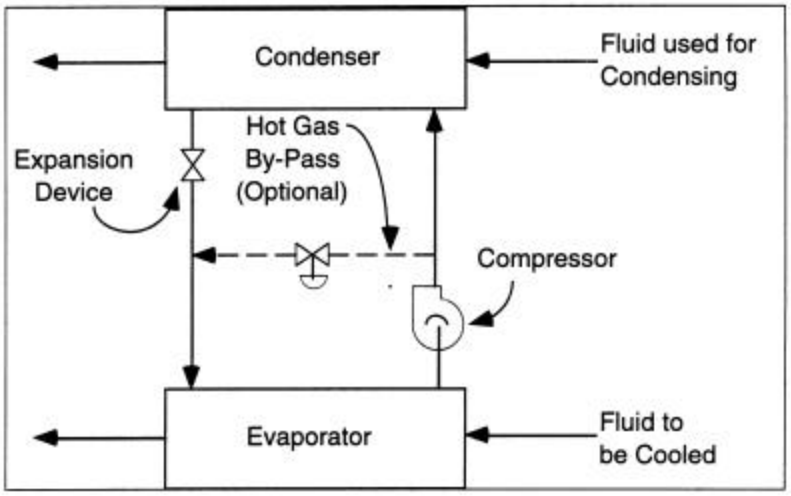

Reciprocating chiller compressors are generally used below 200 tons. Screw compressors are generally economical in the 300- to 800-ton range but are available as low as 40 tons. Centrifugal units are usually used for larger installations but are available in a broad range of capacities (75 to 5,000 tons or more).

Reciprocating compressors offer the lowest power requirement per ton of refrigeration. A typical difference at 100-ton capacity is 1.00 kW/ton for a centrifugal versus 0.80 kW/ton for a reciprocating machine. Although the reciprocating unit is more energy efficient, the savings are not sufficient to justify replacement in a normal situation.

The characteristics of a centrifugal compressor make it ideal for air conditioning applications because it is suitable for variable loads, has few moving parts, and is economical to operate. The power requirement of the centrifugal compressor is about 0.75 kW/ton when 45°F chilled water is produced, and it requires 3 gpm/ton of condenser water. Mechanical compressors are normally driven by an electric motor although many installations utilize a steam turbine drive.

9.3.2 Methods to Reduce Costs

The ultimate users of the cooling system and the distribution system, as well as the refrigeration machines, must operate the systems efficiently. The following steps will lead to the most energy-efficient operation of the refrigeration system.

1. Use refrigeration efficiently.
2. Operate at the lowest possible condenser temperature/pressure (lowest entering condenser water temperature).
3. Operate at the highest possible evaporator temperature/pressure (highest leaving chilled-water temperature); do not overcool.
4. Operate multiple compressors economically.
5. Recover heat rejected in the condenser.
6. Use a hot has bypass only when necessary.

Notes

9.3.2.1 Use Refrigeration Efficiently

The most direct saving will obviously result from shutting down the equipment when refrigeration is not required. Short of shutting down equipment, the refrigeration load may be reduced by ensuring the cooling medium is utilized efficiently at the point of use. A typical problem is overcooling. Other unnecessary losses are inadequate insulation or poor operating practices such as simultaneous heating and cooling.

A reduction in refrigeration load will, of course, reduce the operation of the refrigeration machines, including the associated pumps and cooling towers. Economizer cycles on air conditioning units will also permit early shutdown of refrigeration machines. Refer to the HVAC section for details of economizer cycle operation.

9.3.2.2 Reduce the Condensing Temperature (Pressure)

The most significant method to reduce compressor horsepower (aside from load reduction) is to lower the condensing temperature (pressure). Typically, efficiency improves about 1.5 percent for each 1 degree decrease in refrigerant condensing temperature.

The pressure-enthalpy diagram Exhibit 9.16 illustrates how energy is conserved in the refrigerant cycle (Carnot cycle). At point 1 the refrigerant liquid starts evaporating and absorbs heat from the cooling load. At point 2 all of the liquid is evaporated and emerges as a vapor. Between point 2 and 3 mechanical work is performed to compress the working fluid in the compressor. Between points 3 and 4, the vapor passes to the condenser where heat is removed by the cooling water and the refrigerant returns to the liquid state. Between points 4 to 1 the refrigerant experiences a drop in pressure induced by the expansion valve. Lowering the condensing pressure lowers line 3- 4 to 3'-4', thereby reducing the load on the compressor.

Opportunities to reduce condensing temperature will exist when the cooling tower or air-cooled condenser is operating at less than full capacity. Because the cooling tower or air-cooled condenser is designed for summer conditions, excess capacity should exist in the winter. Rather than controlling to a constant condensing temperature, the lowest possible temperature consistent with the capability of the refrigeration system should be used. Although additional costs are incurred for cooling, these are more than offset by the reduction in compressor horsepower. The condition of the cooling tower or air-cooled condenser is also important for obtaining minimum temperature.

Exhibit 9.16: Pressure-Enthalpy Diagram

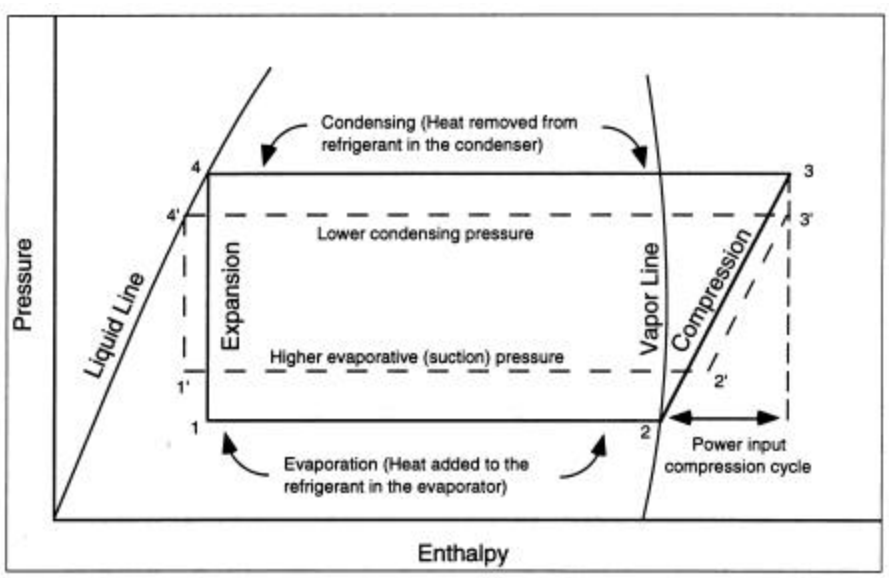

Although it is economical to operate at a lower-entering-condenser-water-temperature than the design temperature, too low a condensing temperature reduces the pressure differential across the refrigerant control (condensing pressure to vaporizing temperature), which reduces the capacity of the control and results

Notes

in starving the evaporator and unbalancing the system. As a rule, the condenser temperature (refrigerant side) should not be less than 75°F to 80°F, or less than 35°F above the refrigerant temperature in the evaporator.

The partial-load power requirements of a typical centrifugal refrigeration compressor at different entering condenser water temperatures are shown in Exhibit 9.15.

The following example calculates the annual savings from reducing the condenser water temperature. A 1,000-ton refrigeration compressor rated at 750 kilowatts at full load is operating at a 700-ton load. The condenser water temperature is reduced from 85°F to 65°F during the five winter months.

Percent design Load = (700 ton actual load) / (1,000 ton design load) x 100 = 70%

From Exhibit 9.17, the percent of full load power at 70 percent design load is:

At 85°F condenser water, 65.5 percent

At 65°F condenser water, 60.0 percent

Input kW at 85°F condenser water	= 750 x 65.6%
	= 491
Input kW at 65°F condenser water	= 750 x 60.0%
	= 450
Savings	= 41 kW
Annual Savings	= 41 kW x 6,000 hrs/yr x 5 mos/12 x 0.05 $/kWh
	= $5,130

Exhibit 9.17: Partial Load Requirement for Centrifugal Refrigeration Compressors

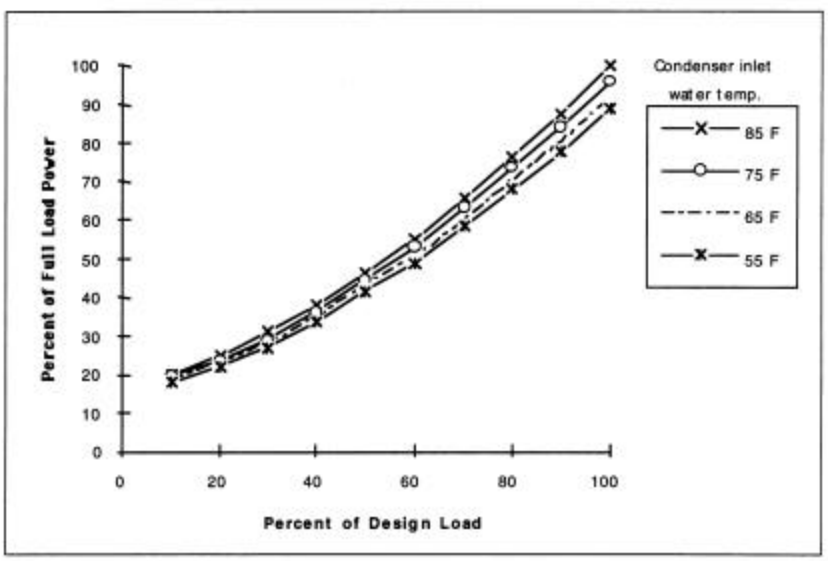

Closely related to lower cooling water temperature is proper maintenance of the condensers. Inadequate water treatment can lead to scaling which can decrease heat transfer through the heat exchanger tubes. A gradual increase in refrigerant temperature at constant load conditions is an early signal of condenser tube fouling.

Notes

9.3.2.3 Raise the Evaporator Temperature (Pressure)

An increase in evaporator temperature reduces the energy required by the refrigeration machine because it must perform less work (reduced lift) per ton of refrigeration produced. The amount of energy reduction depends on the type of refrigeration machine. For a centrifugal machine, the reduction is approximately 1 to 1.5 percent for each degree the evaporator temperature increases at normal evaporator temperatures for air conditioning.

As shown in Exhibit 9.16 increasing the evaporator temperature raises line 1-2 to 1'-2', thereby reducing the load on the compressor between points 2 and 3. The effect is the same as reducing the compressor load by a reduction in condensing pressure (temperature) described in the previous method. Consult the actual performance curve for the individual machine for a more accurate estimate of horsepower reduction.

In some cases a higher evaporator temperature may not be possible if it is fixed by production requirements. An opportunity to increase the evaporator temperature (chilled water temperature) will exist when the flow of chilled water to the various users is throttled. The throttle condition indicates that less than full design flow is required by the units to satisfy the load. The chilled-water temperature can be increased until it reaches the point at which any single user is requiring close to full flow. The system temperature will be controlled by the single user that first reaches full capacity.

While some saving in compressor power is obtained by increasing the leaving chilled-water temperature, greater savings are possible with a centrifugal compressor by changing the compressor speed. The reason is that, at a constant speed, closing the pre-rotation vanes on the compressor raises the chilled-water temperature. This causes the reduction in power to be less than expected for the corresponding increase in evaporating temperature. The speed change could be accomplished by changing gears; or if a variable chilled-water temperature is appropriate, a variable-speed drive could be considered.

To find the savings from an increase in the chilled-water temperature from 45°F to 50°F, use the following example. The refrigeration machine is rated at 1,000 tons and operates at an average load of 600 tons for five months per year.

Conditions: input = 412 kW; 1,800 gpm condenser water and condenser water flow does not change.

Annual Savings = 412 kW x (50°F - 45°F) x 1% x 6,000 hrs/yr. x 5 mos/12 x $0.05/kWh = $2,580

9.3.2.4 Operate Multiple Compressors Economically

If an installation has multiple refrigeration units, economic operation of these units can reduce energy consumption. The operating characteristics of the compressors used will determine the most economical mode of operation. The power requirements of reciprocating compressors make their operation more efficient if one compressor is unloaded or shut down before a second compressor is unloaded. On the other hand, the partial load requirements of a centrifugal compressor, as shown in Exhibit 9.17 make it more economical to operate two compressors at equal partial load than one compressor at full load and the second at low load. For example, it is more economical to operate two centrifugal compressors at 80 percent of capacity than one at 100 percent and the second at 60 percent.

The same approach can be used in the assignment of refrigeration machines to cooling equipment. It is important that the capacity of the refrigeration machine match the capacity of the cooling unit(s) it serves. Therefore, in a system of multiple refrigeration machines and cooling units, care must be taken to assign the refrigeration machines to the cooling units correctly.

Where two or more refrigeration machines supply separate chilled water systems and are located in close proximity to each other interconnection of the chilled water systems can be considered. With this modification, during periods of light loads one machine may be able to carry the load for more than one system.

The following example illustrates the savings from operating two compressors equally loaded, based on five months per year operation. One centrifugal compressor rated at 1,000 tons, 750 kilowatts, and 85°F entering condenser water temperature is operating at a 900-ton load and 75°F entering condenser water. A second 1,000-ton compressor is not running.

Notes

From Exhibit 9.17 you can see the percent of full-load power at 75°F entering condenser water is:

At 90 percent design load, 84.0 percent

At 45 percent design load, 40.5 percent

Input kW at 900 tons = 750 kW x 84%

= 630 kW

Input kW (two units at 450 tons each)

= 750 kW x 40.5% x 2 compressors

= 608 kW

Savings = 22 kW

Annual Savings = 22 kW x 6,000 hrs/yr. x 5 mos/12 x $0.05/kWh

= $2,750

9.3.2.5 Recover Heat

Heat rejected at refrigeration machine condensers can be considered for recovery. The amount of heat rejected in the condenser is 12,000 Btu per hour plus the heat of compression is about 2,500 Btu/hr per ton, giving a total heat rejection of about 14,500 Btu/hr per ton produced. The use of a split condenser permits partial recovery of rejected heat. A split condenser uses two cooling water streams: a process stream that is preheated in the first condenser and cooling tower water for the second condenser. The preheating of a process stream reduces the heating load on the cooling tower. This heat recovery scheme is applicable only if the plant can use a low temperature heat source.

In the following example, a mechanical compressor rated at 1,000 tons is operating five months a year at an average 600-ton load. The savings from recovering 50 percent of the rejected heat to preheat water now heated by a steam hot water heater are:

Heat Rejected = 600 tons x 14,500 Btu/ton-hr

= 8,700,000 Btu/hr

Annual Savings = 8,700,000 Btu/hr x 50% x 6,000 hrs/yr. x 5 mos/12 x $4.24 / 10^6 Btu

= $46,100

9.3.2.6 Reduce Operation of Hot-Gas Bypass

On mechanical refrigeration machines, the primary elements for load controls are the suction damper or vanes, and the hot-gas bypass that prevents compressor surge at low loads. The suction vanes are used to throttle refrigerant gas flow to the compressor within the area of stable compressor operation. As load or flow drops, where it approaches the compressor surge point, the hot-gas bypass is opened to maintain constant gas flow through the compressor. Below this load point for the hot-gas bypass, compressor flow, suction, and discharge conditions remain fairly constant, so that power consumption is nearly constant. Obviously, opening the hot-gas bypass too soon, or having a leaking hot-gas bypass valve, will increase operating cost (kilowatts per ton).

It is not uncommon to find the bypass controls taken out of service, with the bypass set to maintain a fixed opening and constantly recycle high-pressure refrigerant vapors to the suction side of the compressor. A second frequent deficiency occurs when the hot-gas bypass is faulty or grossly oversized and is leaking. A third source of energy loss is faulty load control, which can cause improper operation of the hot-gas bypass valve. Considerable energy can be saved and capacity recouped if the defective hot-gas bypass valves and their controls are corrected.

9.3.2.7 Optimize Refrigeration Performance

The most basic approach to reducing refrigeration costs is to ensure that the refrigeration units are operating at maximum efficiency. To monitor performance, each refrigeration machine must have proper

Notes

instrumentation. This instrumentation includes flow meters for both the chilled water and the condenser water, pressure gauges at the inlet and outlet of both the condenser and evaporator, and temperature wells in both the inlet and outlet of the condenser and the evaporator. These temperature wells should be located in such a manner that a liquid can be placed in the well. The temperature measuring device used to test the equipment should read accurately to one-tenth of a degree.

9.4 Insulation

Although not generally viewed as a part of the mechanical design system, insulation is an important part of every piece of equipment or building where any transfer of fluids or gases takes place and the their temperature is required to be different then that of ambient air. Properly insulated pipes, tanks and other equipment can save thousands of dollars.

There are several opportunities in the industrial sector to realize energy savings by installing insulation in manufacturing facilities. Good insulation design and installation are very important in terms of performance and energy efficiency. It is essential to determine the most appropriate type and thickness of insulation for specific applications. The most cost-effective approaches involve insulating pipes and tanks. These opportunities are described in this section.

9.4.1 Insulation of Pipes

Every facility has piping of some type to carry fluids and gases to the place of use. Most often these pipes carry hot and cold water used for restrooms and kitchen facilities. In industrial applications piping is used to transfer steam, hot water, and chilled water to various manufacturing applications. Insulating the pipes can reduce energy loss during transfer of these fluids and gases. Illustrations of the potential energy savings from insulation of piping are given below.

Exhibit 9.18: Recommended Thickness for Pipe and Equipment Insulation

Nominal Size (in)	Pipe	Process Temperature (‘F)									
		150	250	350	450	550	650	750	850	950	1050
1	Thickness	1	1.5	2	2.5	3.5	4	4	4.5	5	5.5
	Heat Loss	11	21	30	41	49	61	79	96	114	135
	Surface Temp	73	76	78	80	79	81	84	86	88	89
1.5	Thickness	1	2	2.5	3	4	4	4	5.5	5.5	6
	Heat Loss	14	22	33	45	54	73	94	103	128	152
	Surface Temp	73	74	77	79	79	82	88	84	88	90
2	Thickness	1.5	2	3	3.5	4	4	4	5.5	6	6
	Heat Loss	13	25	24	47	61	81	105	114	137	168
	Surface Temp	71	75	75	77	79	83	87	85	87	91
3	Thickness	1.5	2.5	3.5	5	4	4.5	4.5	6	6.5	7
	Heat Loss	16	28	39	54	75	94	122	133	154	184
	Surface Temp	72	74	75	77	81	83	87	86	87	90
4	Thickness	1.5	3	4	4	4	5	5.5	6	7	7.5
	Heat Loss	19	29	42	63	88	102	126	152	174	206
	Surface Temp	72	73	74	78	82	86	85	87	88	90
6	Thickness	2	3	4	4	4.5	5	5.5	6.5	7.5	8
	Heat Loss	21	38	54	81	104	130	159	181	208	246
	Surface Temp	71	74	75	79	82	84	87	88	89	91
8	Thickness	2	3.5	4	4	5	5	5.5	7	8	8.5
	Heat Loss	26	42	65	97	116	155	189	204	234	277
	Surface Temp	71	73	76	80	81	86	89	88	89	92

Notes

9.4.1.1 Steam and Hot Water

Steam lines and hot water pipes should be insulated to prevent heat loss from the hot fluids. Recommended thickness for pipe insulation may be determined from the Exhibit 9.18. The energy and cost savings will depend on the size of the pipe (diameter and length of run), the temperatures of the fluids and the surroundings, the annual hours during which the pipes are heated, the efficiency of the heat supply, the heat transfer coefficient, and the fraction of the year during which heat loss from the pipes does not contribute to space heating. Exhibit 9.19 gives average cost savings from insulation of steam or hot water pipes.

Exhibit 9.19: Steam Lines and Hot Water Pipes: Costs and Benefits

Options[1]	Installed Costs ($)[2]	Energy Savings (MMBtu/yr)	Cost Savings ($/yr)[3]	Simple Payback (yr)
Steam Lines and Hot Water Pipes	2,087	984	3,201	0.7

1. Tabulated data were taken from the Industrial Assessment Center (IAC) database. All values are averages based on the database data. The implementation rate for this measure was 68%.

2. One example from the IAC data base to further clarify the costs is as follows: Insulating 500 ft of condense return pipes located throughout a plant having a 300 MMBtu/hr steam boiler resulted in energy savings of 370 MMBtu/yr and a cost savings of $960/yr. The implementation cost was $1,920.

3. The energy cost savings are based on proposed dollar savings as reported to IAC from the center, which are usually almost identical to actual savings reported from the facility.

9.4.1.2 Cold Water

Lines containing chilled water should be insulated to prevent condensation and frost build-up on the lines and to prevent heat gain. Condensation will occur whenever moist air comes into contact with a surface that is at a temperature lower than the dewpoint of the vapor. In addition, heat gained by uninsulated chilled water lines can adversely affect the efficiency of a cooling system.

Exhibit 9.20: Chilled Water Pipes: Costs and Benefits [1]

Options[1]	Installed Costs ($)[2]	Energy Savings (MMBtu/yr)	Cost Savings ($/yr)[3]	Simple Payback (yr)
Chilled Water Pipes	970	56	850	1.1

1. Tabulated data were taken from the Industrial Assessment Center (IAC) database in 1994. The database does not have a separate category for Chilled Water Pipes. The implementation rate for this measure was 52%.

2. One example from the IAC database to further clarify the costs is as follows: Insulating 250 ft of cold pipe in a brewery resulted in energy savings of 3,500 kWh/yr and a cost savings of $234/yr. The implementation cost was $1,200.

3. The energy cost savings are based on actual dollar savings as reported to IAC from the facility.

9.4.2 Insulation of Tanks

Tanks, similar to pipes, should be properly insulated if their purpose is to hold media at certain temperatures, especially should that be for prolonged periods of time.

Notes

9.4.2.1 Hot Media

Often, tanks containing hot fluids in manufacturing operations lack adequate insulation. The tanks may be insulated with blanket type flexible insulation (1 in. thick, 1.5 lb. density) or rigid insulation, depending on the type of tank. The savings would increase as the boiler efficiency decreases. The savings would also increase as the temperature in the tank increases.

Exhibit 9.21: Hot Tanks: Costs and Benefits [1]

Options[1]	Installed Costs ($)[2]	Energy Savings (MMBtu/yr)	Cost Savings ($/yr)[3]	Simple Payback (yr)
Hot Tanks	1,700	1,183	5,198	0.4

1. Tabulated data were taken from the Industrial Assessment Center (IAC) database. All values are averages based on the database data. The implementation rate for this measure was 44%.
2. The cost of insulation is typically around $0.50/ft^2. One example from the IAC database to further clarify the costs is as follows: Insulating the manufacturing tanks in a food plant resulted in energy savings of 135 MMBtu/yr. and cost savings of $470/yr. The implementation cost was $1,090. The tanks had a top area of 50 ft^2 and side areas of 175 ft^2 and contained fluids at temperatures between 150°F and 230°F. The tanks were located in a room at 70°F.
3. The energy cost savings are based on proposed dollar savings as reported to IAC from the center, which are usually almost identical to actual savings reported from the facility.

9.4.2.2 Cold Media

Uninsulated tanks containing cold fluids are occasionally found in applications, such as chilled water tanks that are located in areas where there can be considerable heat gain through the tank surfaces. If the air surrounding the tank is at a higher temperature than that of the tank, heat will be transferred to the contents of the tank. By insulating these tanks, the heat transfer will be reduced and insulating these tanks can reduce the load on the refrigeration system reduced, resulting in significant energy savings.

Exhibit 9.22: Cold Tanks: Costs and Benefits

Options[1]	Installed Costs ($)[2]	Energy Savings (MMBtu/yr)	Cost Savings ($/yr)[3]	Simple Payback (yr)
Cold Tanks	460	36	520	0.7

1. Tabulated data were taken from the Industrial Assessment Center (IAC) database in 1994. Today the database does not have a separate category for Cold Tanks. All values are averages based on the database data. The implementation rate for this measure was 54%.
2. One example from the IAC database to further clarify the costs is as follows. The energy savings on a refrigeration system having a coefficient of performance of 2 and an uninsulated chilled water tank of 47 ft^2 at a temperature of 52°F in a room at 85°F would be over 2,636 kWh/yr. if the tank were insulated with 1 in. of fiberglass.
3. The energy cost savings are based on actual dollar savings as reported to IAC from the facility.

9.4.3 Building Insulation

Any uninsulated surface (doors, walls, roofs) is a potential heat sink in buildings. The example in the following section can be extrapolated for basically any surface, R-values being the key in evaluation of different insulation.

Notes

9.4.3.1 Dock Doors

Uninsulated dock doors can be a source of significant heat loss in manufacturing facilities. The doors can often be insulated by installing styrofoam or fiberglass in the door panels. The savings depend on the size of the doors, the efficiency of the heating system, the R-values of the insulated and uninsulated doors, and the number of degree heating hours per year. Degree Heating Hours is a measure relating ambient temperature to heating energy required. If the outside temperature is 1 degree below the base temperature in the plant for 1 hour then that represents 1 degree heating hour.

Exhibit 9.23: Dock Doors: Costs and Benefits[1]

Options[1]	Installed Costs ($)[2]	Energy Savings (MMBtu/yr)	Cost Savings ($/yr)[3]	Simple Payback (yr)
Dock Doors	2,882	540	2,590	1.7

1. Tabulated data were taken from the Industrial Assessment Center (IAC) database. All values are averages based on the database data. The implementation rate for this measure was 52%.
2. One example from the IAC database to further clarify the costs is as follows: Installing insulation on an uninsulated dock door resulted in an energy savings of 459 MMBtu/yr., a cost savings of $2,157/yr, and an implementation cost of $3,700, giving a simple payback of 1.7 years.
3. The energy cost savings are based on proposed dollar savings as reported to IAC from the center, which are usually almost identical to actual savings reported from the facility.

9.4.4 Recommended Insulation Standards

Many insulating materials are not suitable for use in direct contact with austenitic stainless steel at or above 140°F or with aluminum. If installed wicking type insulation materials become wet, the soluble ingredients leach out and deposit on the surface of the metal substrate. The deposited ingredients usually consist of sodium silicate (if insulation has been inhibited) and chlorides and alkalites. The chlorides in these deposits can cause stress corrosion cracking of austenitic stainless steel at the above mentioned temperatures if there is not enough sodium silicate inhibitor to neutralize them. Alkaline ingredients in insulation, when wet, can cause corrosion of unprotected aluminum substrate. Where aluminum substrate protection is required, cost the aluminum with fibrated asphalt cutback. Excess wetting with water or especially with acid solution can substantially reduce the service life of the inhibitor. In addition, wet insulation can corrode unprotected carbon steel pipe and equipment, especially during storage or shutdown periods.

Inhibited insulation that is suspected of having been wet is not recommended for use on austenitic stainless steel. Use inhibited insulation for austenitic stainless steel at or above 140 °F. If new inhibited insulation is not available, provide field applied protection against stress corrosion cracking. Although the coating can be applied either to the insulation or the metal, the metal is preferred.

9.4.4.1 Lowest Cost System

The lowest recommended cost system recommended is based on both installed and continuing cost, consistent with reasonable safety and return on investment. In other words, the lowest cost thermal insulation system is one that will remain in place for the designed life of the system and provide the desired function. As usually is the case, the options might not be such a clear cut in real life as it seems on paper. The interruption of the service caused by maintenance has to be accounted for as well.

9.4.4.2 Economic Factors to be Considered in Basic Insulation Selection

Different types of insulation have different applications where they are best suited for use. Four basic types of insulation are listed here with there basic usage parameters. When considering insulation opportunities, the Assessment Team must consider the type of insulation and the application in the opportunity analysis.

Notes

Glass Fiber

Glass fiber insulation has the disadvantage of moisture absorption and low resistance to abuse. The continuing maintenance can offset any advantage of the initial cost.

Calcium Silicate

Calcium silicate and inhibited calcium silicate provide the lowest cost system in the temperature range between 300°F and 1,200°F. They are also satisfactory down to 140 °F if polyisocyanurate foam is not suitable.

Polyisocyanurate

Polyisocyanurate foam is preferred to both glass fiber and calcium silicate for low temperature applications (140°F to 300°F). When compared with calcium silicate, polyisocyanurate has better moisture resistance that is particularly important for outdoor application. Material and installation costs are comparable with those for calcium silicate. Polyisocyanurate insulation is suitable over a temperature range of -100°F to 300°F and, therefore, is excellent for dual temperature applications.

Mineral Wool

Mineral wool provides the lowest cost system in the temperature range of 1,200°F to 1,800°F. This is true only if the metal surfaces to be insulated are not austenitic stainless steel and/or abuse resistance is not a factor.

9.4.4.3 Finish Factors Influencing Insulation Selection

Where the chemical environment permits, the lowest initial cost finish for pipe is kraft aluminum laminate. The finish is limited to dry, indoor, no abuse areas; and may discolor with age. The lowest cost finish on a continuing basis for pipe and cylindrical sections of indoor or outdoor equipment, if chemical resistance is not an issue, is smooth aluminum jacket fastened with stainless steel bands. Reinforced mastic finishes should be used only over irregular shapes and where absolutely necessary. Stainless steel pipe covering is recommended only in special situations where other finishes do not provide adequate protection.

9.4.5 Process Equipment

Insulating process equipment does not differ in principle from insulating tanks or pipes. The purpose is to maintain certain temperature where required and minimize heat input to make up for heat transfer loses, usually to the atmosphere. Contrary to a variety of service lines or holding tanks, where the temperature is not important at the given location and an improper insulation only constitutes economic loss, temperature in the process equipment is essential for the process and sometimes the insulation is a very convenient way to ensure it.

9.4.5.1 Injection Mold Barrels

The barrels on injection molding machines are heated to a very high temperature to allow plastic to flow into the mold. The heat loss from the barrels contributes to the air conditioning load in the plant as well as increasing the energy required to keep the barrels hot. Rock wool blanket insulation is made specifically for this purpose and is easily removed if maintenance on the barrels is required. This measure is not recommended when ABS or PVC plastics are being molded because the shear forces generate so much heat that cooling is required.

Exhibit 9.24: Insulate Equipment: Costs and Benefits

Options[1]	Installed Costs ($)[2]	Energy Savings (MMBtu/yr)	Cost Savings ($/yr)[3]	Simple Payback (yr)
Injection Mold Barrels	2,435	695	3,621	0.7

Notes

1. Tabulated data were taken from the Industrial Assessment Center (IAC) database. All values are averages based on the database data. The implementation rate for this measure was 46%.
2. One example from the IAC data base to further clarify the costs is as follows: Insulating injection mold barrels resulted in an energy savings of 375 MMBtu/yr, a cost savings of $2,589, and an implementation cost of $2,028, giving a simple payback of ten months.
3. The energy cost savings are based on proposed dollar savings as reported to IAC from the center, which are usually almost identical to actual savings reported from the facility.

Notes

REFERENCES

1. Handisyde, C.C., and Melluish, D.J., *Thermal Insulation of Buildings*, HMSO, 1971
2. Malloy, J.F., *Thermal Insulation*, Van Nostrand Reinhold, 1969
3. The Association of Energy Engineers, *Corporate Energy Management Manual*, The Fairmont Press, 1979
4. Thumann A., and Mehta D.P., *Handbook of Energy Engineering*, The Fairmont Press, 1992
5. Kennedy, W. Jr., W.C. Turner, Energy Management, Prentice-Hall, Inc., Englewood Cliffs, NJ, 1984, pp. 204-221.
6. 1989 ASHRAE Handbook of Fundamentals, American Society of Heating, Refrigerating, and Air Conditioning Engineers, Inc., Atlanta, GA, 1989.
7. Motor Master, Washington State Energy Office, Olympia, WA, 1992.

CHAPTER 10. HVAC

Notes

This chapter discusses heating, ventilation, and air conditioning (HVAC) equipment. A description of each type of equipment, its general uses, operation, and common opportunities for energy conservation are presented

10.1 Air Conditioning

Air conditioning is the process of treating air to control its temperature, humidity, cleanliness, and distribution to meet the requirements of the conditioned space. If the primary function of the system is to satisfy the comfort requirements of the occupants of the conditioned space, the process is referred to as comfort air conditioning. If the primary function is other than comfort, it is identified as industrial air conditioning. The term ventilation is applied to processes that supply air to or remove air from a space by natural or mechanical means. Such air may or may not be conditioned.

10.1.1 Equipment

Air conditioning systems utilize various types of equipment, arranged in a specific order, so that space conditions can be maintained. Basic components consist of:

- A fan to move air.
- Coils to heat and/or cool the air.
- Filters to clean the air.
- Humidifiers to add moisture to the air.
- Controls to maintain space conditions automatically.
- A distribution system to channel the air to desired locations, including dampers to control the volume of air circulated, as shown in Exhibit 10.1.

Within each basic component there are different types and styles, each with their own operating characteristics and efficiency, method and materials of construction, and cost, all of which greatly affect the initial design and resulting operating economics of the system. While this manual is directed principally to conservation with existing installations, ideally energy conservation should start during the initial design and equipment selection stages of the system.

10.1.1.1 Fans

The centrifugal fan with a backward-curved impeller is the predominant fan used in “built-up” type air conditioning units, while the forward-curved impeller centrifugal fan is used in “package” type air handling units.

10.1.1.2 Coils

Coils are used in air conditioning systems either to heat or cool the air. The typical coil consists of various rows deep of finned tubing. The number of fins per inch varies from 3 to 14. The greater the number of fins per inch and row’s depth that a coil contains, the greater its heat transfer rate will be. An increase in heat transfer surface results in an increase in heat transfer efficiency and also in increased airflow resistance that will, in turn, require increased fan horsepower.

Heating coils will use either steam or hot water as a heating medium. The primary purpose of the coil depends upon its location in the air handling system. A preheater is the name given to a coil located in the makeup outdoor air duct. The preheater’s purpose is to raise the temperature of makeup air to above freezing. The heating coil doing the final heating of the air before it enters the conditioned space is referred to as a reheater. Its purpose is to maintain satisfactory space temperature by adding heat to the supply air when it is required.

Notes

Exhibit 10.1: Air Conditioning Equipment

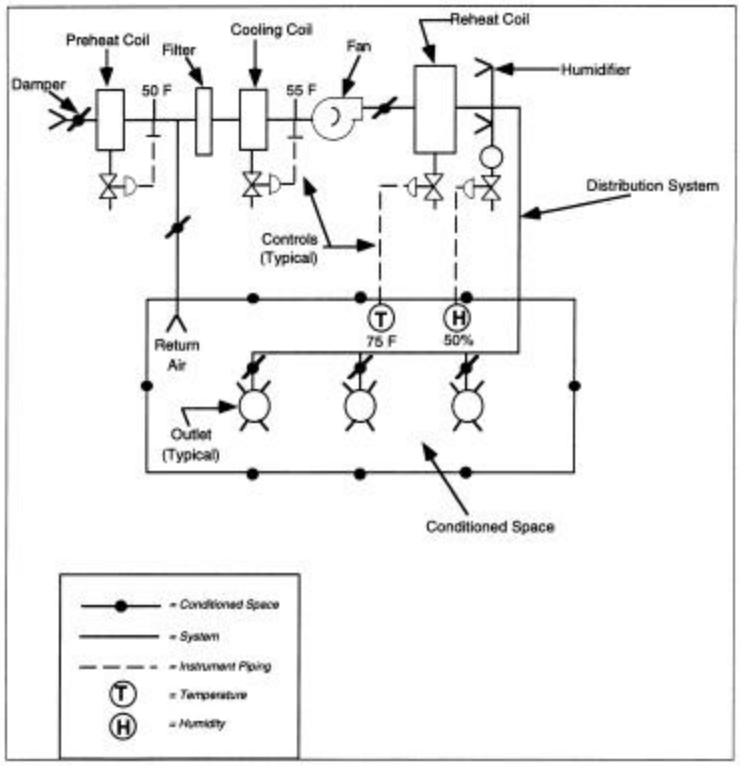

Cooling coils similar to that of the heating coils described above except that the coils cool the air instead of heating. The cooling medium used is chilled-water, brine, or refrigerant in a direct expansion-type coil. Direct expansion-type coils are used on small systems when a chilled water system is not economical. Chilled water is used on all other systems when the air temperature required is above 50°F. When the air temperature required is less than 50°F, a brine solution is used as the cooling medium because of its exposure to subfreezing temperatures in the refrigeration machine.

10.1.1.3 Air Washers

A spray-type air washer consists of a chamber or casing containing a spray nozzle system, a tank for collecting the spray water as it falls, and an eliminator section at the discharge end for removal of entrained drops of water from the air. An air washer can be used either to humidify or dehumidify the treated air depending upon the temperature of the spray water. Air washers will also clean the air to a small extent. Air washer efficiency increases as the volume of spray water circulated increases. When spray water is used for humidification purposes, it is recirculated with only sufficient makeup to satisfy evaporation losses. When spray water is used for cooling, it is a mixture of recirculated water and chilled water. The amount of chilled water is controlled to provide desired results.

The use of air washers in the comfort air conditioning field has been gradually replaced by the use of cooling coils. Some industrial air conditioning systems, particularly in the textile industry, still use air washers.

10.1.1.4 Air Cleaners

Air cleaners (filters) are used to reduce the dirt content of the air supplied to the conditioned space and to keep equipment clean. The type of air cleaning equipment required depends upon the requirements of the conditioned space, the amount of dirt to be removed from the air stream, and the size of the dirt particles to be removed. The smaller the particles size to be removed, the harder and more expensive the air cleaning procedure.

Notes

Three operating characteristics distinguish the various types of air cleaners: efficiency, airflow resistance, and life or dust-holding capacity. Efficiency measures the ability of the air cleaner to remove particulate matter from an air stream. The interpolation of air cleaner ratings for efficiency and holding capacity is complicated by the fact that there are three types of tests, along with certain variations, employed for testing filters. The operating conditions that exist are so varied that there is no individual test that will adequately describe all filters. Air cleaners used in the comfort air conditioning field fall into three broad categories: fibrous media, renewable media, and electronic. Various combinations of these types can be used. Air cleaners for industrial applications fall into five basic types: gravity and momentum collectors, centrifugal collectors, fabric collectors, electrostatic precipitators, and wet collectors.

The installation cost and the operating cost of an air cleaning system vary over a wide range. Therefore, an economical installation is one in which the air cleaning unit(s) provides only the degree of cleaning required to satisfy the actual space requirements and not those of an arbitrarily excessively clean environment.

The pressure drop to which the air cleaning devices subject the air system varies from a low of 0.1 inch of water gauge (inches W.G.) to 10.0 inches W.G. in industrial air conditioning systems. In comfort air conditioning, generally, the higher the air cleaner efficiency, the higher its pressure drop will be. Air conditioning systems must compensate for the pressure drop through an increase in fan horsepower.

10.1.1.5 Humidifiers

Humidifiers are devices that add moisture to the air stream, thereby raising the relative humidity of the conditioned space. In most comfort air conditioning systems and in many industrial air conditioning systems, humidifying devices are commonly sparging steam or atomizing water directly into the air stream.

Since the advent of energy conservation, the standards for comfort air conditioning systems have been reviewed and revised. One of the revisions eliminated the control of humidity as a comfort air conditioning system standard, since controlling humidity requires additional energy consumption year-round. In industrial air conditioning systems that employ humidity control, it is recommended that this need be reviewed and be reduced to the lowest degree the process will permit.

10.1.1.6 Controls

Controls for an air conditioning system contain various control loops, which automatically control selected functions of the air conditioning system operation. The control system can be very simple or very complex depending upon the size and complexity of the air conditioning system, the extent of operation, and the degree of sophistication desired.

Control systems can control temperatures, humidity, duct pressure, airflow, sound alarms, and provide data to remote locations. These systems are operated either pneumatically or electronically, or a combination of both can be used. For the most economical operation of the air conditioning system, controls must be maintained. Their calibrations should be routinely checked along with the proper operation of valves and dampers.

10.1.1.7 Distribution System

The distribution system is a network of ducts which transports the air between the conditioning equipment and the conditioned space(s). The system consists of outlet and inlet terminals (diffusers, registers, grilles) for distribution of air within the conditioned space, and dampers (automatic and manual) for control of air volume. The design of the distribution system greatly affects the amount of pressure drop (resistance) it adds to the total system. Low-pressure (low-velocity) systems are designed with duct velocities of 1,300 fpm or less for comfort air conditioning systems and up to 2,000 fpm for industrial air conditioning systems. High-pressure (high-velocity) systems employ duct velocities from 2,500 fpm on small systems (1,000 to 3,000 cfm) up to 6,000 fpm on large systems (40,000 to 60,000 cfm). Higher duct velocities result in higher duct system resistance (pressure drop resulting in increased fan horsepower).

10.1.2 Psychrometry

Psychrometry deals with the determination of the thermodynamic properties of moist air and the utilization of these properties in the analysis of conditions and processes involving moist air. Air

Notes

conditioning deals with changing the properties of air to provide desired results in the conditioned space. The psychrometric chart, a graphical representation of the thermodynamic properties of moist air, is an invaluable aid in illustrating and solving air conditioning problems.

Since the properties of moist air are affected by barometric pressure, corrections must be made when equipment installation is done at other than sea level (29.92 inches Hg). Psychrometric charts are available for elevations at sea level, 2,500 feet, 5,000 feet, 7,500 feet, and 10,000 feet. Also, charts are available for different temperature ranges. The properties of moist air shown on a psychrometric chart are dry bulb (DB) temperature, wet bulb (WB) temperature, dew point temperature (DP), relative humidity (RH) in percent, specific humidity (W) in grains per pound, specific enthalpy (h) in Btu per pound, and specific volume (V) in cubic feet per pound. A description of these terms is listed in Appendix D. These properties can be found by using a typical psychrometric chart.

10.1.3 Computation

The following formulae and factors are used in the air conditioning field:

Btu = (lbs) (sp. heat) (Δt)

Btu/hr = (lbs/hr) (sp. heat) (Δt)

Btu/hr = (lbs/hr) (hg - hf)*

$\text{Lbs/hr}_{\text{std. air}}$ = (cfm) (lbs/cf) (60 min/hr)

= (cfm) (0.075) (60)

= (cfm) (4.5)

$\text{SH, Btu/hr}_{\text{std. air}}$ = (lbs/hr) (sp. heat) (Δt)

= (cfm) (4.5) (0.24) (Δt)

= (cfm) (1.08) (Δt)

cfm = SH / [(1.08)(room temperature – supplied air temperature)]

$\text{LH, Btu/hr}_{\text{std. air}}$ = (lbs/hr) (hg –hf) (grains of moisture diff./7,000 grains/lb)

= (cfm) (4.5) (1,054) (grains diff./7,000)

= (cfm) (0.68) (grains diff.)

$\text{Lbs/hr}_{\text{water}}$ = (gpm) (lbs/gal) (min/hr)

= (gpm) (10.33) (60)

= (gpm) (500)

hp_{air} = [(cfm)(ΔP)] / [(6,350)(fan efficiency)]

hp_{water} = [(gpm)(ΔP)] / [(3,960)(pump efficiency)]

where

Δt = temperature difference

ΔP = pressure difference

*(hg -hf) = 1,054 Btu/lb represents the heat of vaporization at 70°F. Variation in value for different conditions will be small.

10.1.4 Energy Conservation

The potential for energy conservation in the air conditioning field can vary greatly depending upon the following:

Notes

1. Design of systems
2. Method of operation
3. Operating standards
4. Maintenance of control systems
5. Monitoring of system
6. Competence of operators

Examples of various energy-saving methods used in the following sections are based on a facility having the following characteristics:

1.	Supply fan capacity:	10,000 cfm @ 3,0 in S.P., 6.8 bhp
2.	Outdoor air:	30% = 3,000 cfm
3.	Return air:	70% = 7,000 cfm
4.	Room temperature:	75°F DB, 62.5°F WB, 55.0°F DP, 50% RH
5.	Room loads:	summer = 108,000 Btu/hr/(sensible heat)
		winter = 216,000 Btu/hr/(sensible heat)
6.	Space, volume:	55,000 cu. ft.
7.	Space, area:	5,500 sq. ft.
8.	Space, cfm/sq.ft.:	1.8
9.	Space, supply air temp.:	summer design = 65°F, winter design = 95°F
10.	Design preheater load :	162,000 Btu/hr = 169 lbs/hr (based on 50°F disc. temp.)
11.	Design on cooling coil load:	364,500 Btu/hr = 30 tons
12.	Design outdoor temp.:	summer = 95°F DB, 78°F WB; winter 0°F
13.	Design outdoor degree days :	5,220 (65°F), 3,100 (55°F), 2,100 (50°F)
14.	Design outdoor avg. winter temp.:	41.4°F (Oct. to Apr. inclusive)
		< 67.0°F, 3,052 hrs/yr
		38.0°F = Avg. < 50°F, 3,543 hrs/yr
		33.0°F = Avg. < 40°F, 2,162 hrs/yr
15.	Equiv. hrs/season refrig. at full load:	750 hrs

10.1.4.1 Operate Systems Only When Needed

Air conditioning systems, including refrigeration machines, pumps, and cooling tower systems, should be operated only when areas are occupied (for comfort air conditioning systems) and when processes are operating (for non-comfort air conditioning system). It is not uncommon for systems to operate continuously. Reducing operating hours will reduce electrical, cooling, and heating requirements. Continuous operation during normal working hours of 8 a.m. to 5 p.m., five days per week, such as that for an office building is a good example of excessive operation of equipment.

The savings resulting from reducing operating hours from 168 hours per week to 50 hours per week is calculated as follows.

Savings from Reduced Fan Operation

= (Supply fan bhp) (Cost, $/hp-yr) [(hrs/wk shut off) / (hrs/wk current operation)]

= (6.8) ($360) [(168 - 50) / (168)] = $1,720/yr

Notes

Savings from Reduced Space Heating Operating

= {[(24)(deg day)(design htg. load, Btu/hr)] / [room T - outside T]}(stm. cost, $/MM-Btu) x {(hrs/week off) / (hrs/week current on)}(allowance for heat up)

= {[(24)(5,220)(216,000)] / [(75 - 0)]}{$4.24 / 10 6 }{(168 - 50) / 168}(0.5) = $537/yr

Savings from Reduced Preheater Operation of Outdoor Air

= (cfm) (1.08)* (design disc. temp. - avg. temp. < disc. temp.)x (hrs/yr temp. < disc. temp.) x (stm. cost, $/MM-Btu) x {(hrs/week off) / (hrs/week current operation)}

= (3,000) (1.08) (50 - 38) (3,543) {$4.24 / 10^6}{(168 - 50) / 168} = $410/yr

* Factor of 1.08 = 0.075 lbs/cu. ft. x 0.24 sp. heat x 60 min/hr

Savings from Reduced Cooling Operation

= (design cooling oil load, tons) (equiv. hrs/season @ full load) x (refrig. sys. load, hp/ton) {(hrs/week off) / (hrs/week current operation)} x (cost, $/hp-hr) (allowance for cool down)

= (30) (750) (1.25){(168 - 50) / 168}($0.041) (0.75) = $607/yr

Summary of Total Annual Savings

Fans	=	$1,720
Space Heating	=	537
Preheater	=	410
Space Cooling	=	607
Total	=	$3,274

10.1.4.2 Eliminate Overcooling and Overheating

Eliminating overcooling and overheating normally requires revising operating standards and modifying air conditioning system controls. Instead of maintaining a constant temperature, the more energy efficient standard allows the temperature to fluctuate within a dead-band range. Heating should be used only to keep the temperature of the conditioned space from going typically below 68°F to 70°F and cooling should be used only to keep the temperature from exceeding 78°F to 80°F. These conditions apply only during normal hours of occupancy. During unoccupied periods, the standard should specify minimum conditions necessary to protect the building's contents. Process requirements may, of course, dictate maintaining special conditions. Exhibit 10.1 illustrates a single zone system with a simple control system that results in overcooling and overheating. Exhibit 10.2 shows this system with a modified control system that would eliminate simultaneous cooling and heating.

Cooling Example

The cooling coil and reheat coil are controlled as shown in Exhibit 10.1. The savings resulting during the heating season if the coils were controlled in sequence as shown in Exhibit 10.2 is calculated below. Assume that the mixed air temperature entering the cooling coil is 68°F, and the heating season is seven months long.

Savings from Eliminating Excessive Cooling

= {[(cfm)(1.08)(temp. diff.)] / [Btu/ton]}(hp/ton) ($/hp-yr) (htg. season, mos./12)

= {[(10,000)(1.08)(68 - 50)] / [12,000]}(1.25) ($360)(7/12) = $3,040/yr

Notes

Total Annual Savings

Cooling	=	$3,070 (from previous example)
Reheating	=	3,040
Total	=	$6,110

Heating Example

The savings resulting from changing the room thermostat setting from 75°F to 68°F during the heating season is calculated as follows.

Given:

1. Room heating load at 75°F = 216,000 Btu/hr
2. Room heating load at 68°F = (216,000)(68/75) = 195,800 Btu/hr

Annual $Cost_{75°F}$

= {[(24)(deg day)(design htg. load, Btu/hr)] / [room T - outside T]}(stm. cost, $/MM-Btu)

= {[(24)(5,220)(216,000)] / [(75 – 0)]}{$4.24 / 10^6} = $1,530

Annual $Cost_{68°F}$

= (Annual cost at 75°F) [(68°F - winter average temp.) / (75°F - winter average temp.)]

= ($1,530)[(68 - 41.4) / (75 - 41.4)] = $1,211

Annual Savings = $1,530 - $1,211 = $319

Note: Difference in cost is proportional to temperature difference maintained with ambient temperature

Exhibit 10.2: Modified Air Conditioning System Controls

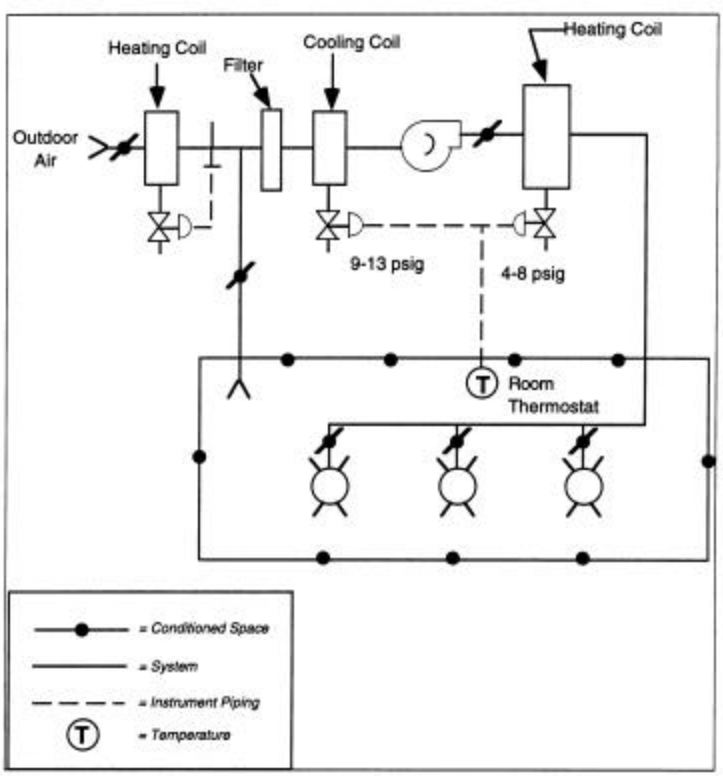

Notes

10.1.4.3 Eliminate Reheat

When humidity control is required, the conventional method is to cool the air to the required dew point temperature to remove the excess moisture and then reheat the air to deliver it at the desired humidity and temperature as illustrated in Exhibit 10.2. The cost of reheating for humidity control is not considered justified in today's energy situation for comfort air conditioning systems.

The inclusion of a humidity standard is not recommended for normal air conditioning comfort standards and should be discontinued. Likewise, no system should operate in a manner that requires it to heat and cool at the same time. At any given instant the system should be either heating or cooling--never both. The process of cooling and then reheating is inefficient, whether for humidity control or because of system design.

10.1.4.4 Economizer Cycle

Many air conditioning systems operate with a fixed minimum amount of outdoor air. The mechanical refrigeration load on these systems can be reduced by modifying the system to utilize outdoor air at up to 100 percent of its supply airflow when outdoor air is cooler than return air. This is referred to as an economizer cycle. Many systems do not have an economizer cycle and fail to take advantage of its potential savings.

An economizer cycle will eliminate or reduce mechanical cooling when the outdoor air is cooler than return air. When outdoor air is warmer than return air, only the minimum amount of outdoor air required for fresh air supply is used.

The switchover point of an economizer cycle is usually done by one of two methods: sensing outdoor dry bulb (DB) temperature or sensing outdoor and return air enthalpy (heat content). Exhibit 10.3, Exhibit 10.4 (dry bulb method), and Exhibit 10.5 illustrate the two methods of economizer control.

In the outdoor DB temperature switchover method, when the outdoor DB temperature is above the set point temperature, the dampers are in their normal position--outdoor damper closed to minimum air inlet flow position and return air damper fully open. When the outdoor DB temperature is less than set point temperature, the dampers are modulated by the temperature controller.

In the enthalpy switchover method, the enthalpy control senses DB temperature and relative humidity in both the outdoor air and return air streams and feeds these values into an enthalpy logic center. The logic center compares the enthalpy (heat content) of each air stream and allows outdoor air to be used whenever its enthalpy is less than that of the return air.

When the outdoor enthalpy is greater than the enthalpy of the return air, the dampers are maintained in their normal position--outdoor damper closed to minimum air inlet flow position and return air damper fully open in the same manner as the outdoor temperature switchover method. When the outdoor enthalpy is less than the enthalpy of the return air, the dampers are modulated by the temperature controller.

The energy switchover method is more efficient because it is based on the true heat content of the air. The enthalpy of air is a function of both the DB temperature and its relative humidity (or wet bulb temperature). Therefore, DB temperature alone is not a true measure of the air's heat content. Under certain conditions, air with a higher DB temperature can have a lower enthalpy than air with a lower DB temperature because of differences in humidity. The outdoor DB temperature switchover method utilizes a single conservative DB temperature between 55°F to 60°F, which ensures the enthalpy of the outdoor air is always less than the enthalpy of the return air. On the other hand, since the enthalpy switchover method determines the use of outdoor air on its enthalpy, the switchover point will vary and normally occur at a higher outdoor DB temperature than the DB temperature typically selected for the outdoor DB switchover method. Consequently, less mechanical cooling is required than with the outdoor DB temperature switchover method.

In the method shown in Exhibit 10.3, which is found in many installations, the makeup air and return air dampers are controlled to maintain a fixed mixed air temperature. In Exhibit 10.4 the control system that operates the chilled-water valve also operates the makeup air and return air dampers in sequence with the chilled-water valve. The method illustrated in Exhibit 10.4 is better because it results in a lower load on the cooling coil. The preferred method, however, is shown in Exhibit 10.5, which utilizes enthalpy control for switchover.

Notes

Exhibit 10.3: Economizer Cycle (Outdoor Temp. Switchover, Mixing Temp. Control)

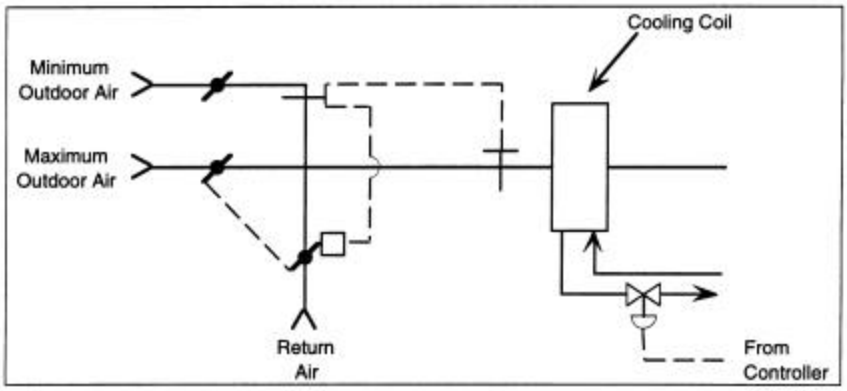

Exhibit 10.4: Economizer Cycle (Outdoor Temp. Switchover, Chilled H 2 O Control)

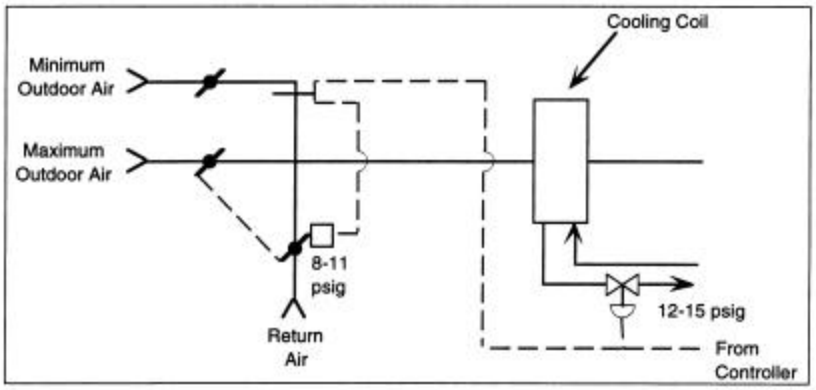

Exhibit 10.5: Economizer Cycle (Enthalpy Switchover, Chilled H 2 O Control)

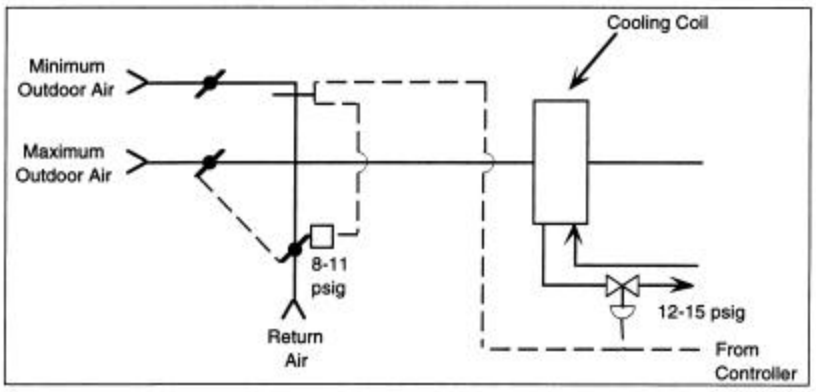

The savings resulting from an economizer cycle vary with the type of economizer cycle control and the type of air conditioning system control. Savings for different conditions are given in the examples shown below.

Notes

Outdoor Temperature Method

The saving resulting from an economizer cycle with outdoor temperature switchover at 56.5°F on a year-round air conditioning system (continuously operating) is calculated as follows. The preheater discharge temperature is controlled at 40°F. Savings are determined in two steps.

1. Economizer savings when the outdoor temperature is < 40°F. The temperature of the air entering the cooling coil when the outdoor air is less than 40°F is 64.5°F.*

   = {[(cfm)(1.08)(temp. diff.)] / [Btu/ton]}(hp/ton)(refrig., hp/ton)(cost, $/hp-yr) x {(hrs temp < 40°F) / (8,760)}

   = {[(10,000)(1.08)(64.5 - 56.5)] / [12,000]}(1.25) ($360)(2,162/8,760) = $800/yr

2. Economizer savings when the outdoor temperature is between 40°F and 56.5°F. (Above 56.5°F only minimum 30% outdoor air is used.) The average temperature of air entering the cooling coil is approximately 67°F*, which represents the midpoint between the maximum and the minimum temperature that would occur.

   = {[(10,000)(1.08)(67* - 56.5)] / [12,000]}{(1.25) ($360)[(3,052) / (8,760)] = $1,481/yr

		Max	Min
Outdoor temp.	=	56.5ºF	40.0ºF
30% outdoor air	=	17.0	12.0
70% return air @ 75'F	=	52.5	52.5
Avg. temp.	=	69.5	64.5

Average = (69.5°F + 64.5°F) / 2 = 67°F

Annual Savings for Condition A

Outdoor temp. < 40°F = $ 800

Outdoor temp. between 40°F and 56.6°F = 1,400

Total $2,280

*Temperature of air entering coil.

Enthalpy Switchover Method

Given the same conditions as the previous example, the savings from an economizer cycle using the enthalpy method. To determine either enthalpy, the wet bulb (WB) temperature or dry bulb temperature (DB) and relative humidity are needed. The enthalpy value for the particular condition can be read from a psychrometric chart.

For this example, an average outdoor air relative humidity of 50 percent at 56.5°F is assumed, which corresponds to 47.5°F WB temperature. The actual additional reduction in cooling load over the outdoor temperature method will depend on the outdoor air conditions at the time. The reduction can vary over the range from no reduction when conditions approach 62.5°F WB to a maximum reduction when approaching 47.5°F WB. For practical purposes it can assumed an average reduction of approximately one half of the maximum.

The cooling load when all return air is used is:

Btu/hr = (ret. air cfm) (4.5) (h ret. air - h cooling air disc.)

= (7,000) (4.5) (28.2 - 19.0)

= 289,000 or 24.15 tons

The cooling load when all outdoor air is used is zero.

Notes

Therefore, the average reduction in cooling load using outdoor air with the enthalpy switchover method is:

Reduction cooling load = 289,800 / 2 = 144,900 Btu/hr

Enthalpy remains constant for any given WB temperature irrespective of DB temperatures. Accordingly, the number of hours for which a given enthalpy existed can be obtained from local weather records of WB temperatures. For this example, the outdoor WB temperature was between 47.5°F WB and 62.5°F WB for approximately 2,000 hours per year.

Additional annual savings using enthalpy control:

= [(Btu/hr saved) / (Btu/ton)](refrig., hp/ton)(cost, $/hp-yr)[(hrs. applicable) / (8,760)

= [(144,900) / (12,000)](1.25)($360)[(2,000) / (8,760)] = $1,240/yr

Total annual savings for the enthalpy switchover method over no economizer cycle include the above savings plus the savings for the DB switchover outdoor temperature method in the previous example.

Outdoor temperature method	=	$2,280
Additional savings with enthalpy method	=	$1,240
Total		$3,520

10.1.4.5 Minimize Amounts of Makeup and Exhaust Air

The amount of makeup air a system must have depends upon the largest demand caused by the following:

1. Ventilation for personnel
2. Exhausting of air from work areas
3. Overcoming of infiltration

In many systems, the sum of items No. 2 and 3 dictates the amount of makeup air required. When this is the case, the amount of air being exhausted should be reviewed to determine if it is excessive. Minimizing infiltration requires that all openings between conditioned and non-conditioned spaces be closed and that doors and windows fit tightly. The ventilation rate for people can vary between 5 to 20 cfm and sometimes higher depending on the use of the room. Also, excessive damper leakage can result in an excessive amount of makeup air.

Excess makeup air in the winter will result in additional heating load. The cost to preheat 1,000 cfm of outdoor air to 50°F is calculated as follows.

Cost = (cfm) (1.08) (50°F - avg. temp. < 50) (hrs./yr. temp < 50°F)x (stm. cost, $/MM-Btu)

= (1, 000) (1.08) (50 - 38) (3,543) ($4.26 / 10^6) = $196/yr.

Excess make-up air in the summer will result in additional cooling load. The cost of cooling is estimated to be $410/yr. Total annual savings = $196 + $410 = $606

10.1.4.6 Minimize the Amount of Air Delivered to a Conditioned Space

The amount of air delivered to a conditioned space is governed by one or more of the following:

1. Heating and/or cooling load
2. Delivery temperature
3. Ventilation requirements (exhaust, people, infiltration)
4. Air circulation (air changes)

The design of both comfort and many industrial air condition systems requires that, for good air circulation, the amount of supply air should provide an air change every 5 to 10 minutes. The design of many systems will be for a 6- to 7-minute change. Reducing airflow will reduce fan horsepower. The model that

Notes

has been used is such a system; it requires heat, and the air change is 5.6 minutes (1.8 cfm per square foot, 10-foot ceiling height).

The method used in reducing the system's airflow has a great influence on the amount of horsepower saved. Three methods normally used are:

1. Fan discharge damper
2. Fan vortex damper (fan inlet)
3. Fan speed change

The savings resulting from reduced reheat and fan horsepower on a year-round air conditioning system when the airflow is reduced from 1.8 cfm per square foot (5.6 minute air change) to 1.1 cfm per square foot (9.1 minute air change) can be calculated as follows.

1. Find the new airflow

   cfm 2 = (cfm)[(air change 2) / (air change 1)] = 10,000 (1.1/1.8) = 6,110

2. Find the new supply temperature:

   Supplied air inlet temp. = roomtemp. - [(given room sensible load, Btu/hr]) / [(1.08)(cfm)]

   = 75 - [(108,000) / (1.08 x 6,110)] = 58.6°F

3. Find the savings from reheat reduction:

   $Cost_{1.8}$ = (cfm) (1.08) (T_2 - T_1) (cost, $/MM-Btu/hr-yr)

   = (10,000) (1.08) (65 - 56.5) [($37,100) / 10^6] = $3,406/yr

   $Cost_{1.1}$ = (6,110) (1.08) (58.6 - 56.5) [($37,100) / 10^6] = $514/yr

   Annual Savings (Reheat Reduction) = $3,406 - $514 = $2,892

4. Find the cfm reduction (in percent):

   cfm reduction = [(cfm_2)/(cfm_1](100)=[(6,110)/(10,000)](100)=61%

5. Find the total savings:

Exhibit 10.6: Total Savings

Method of Reduction	Hp Red* %	Initial hp	Saved hp	Cost $/hp-yr	Savings** $/yr
Outlet Damper	14.2	6.8	0.97	360	349
Inlet Vane Damper	45.0	6.8	3.06	360	1,100
Fan Speed	63.8	6.8	4.34	360	1,560

*Based on continuous operation

**From Exhibit 10.7

6. Find the total savings:

Notes

Exhibit 10.7: Effect of Volume Control on Fan Horsepower

$ Savings			
Method	Fan hp	Reheat	Total
Outlet Damper	349/yr	2,900/yr	3,249/yr
Inlet Vane Damper	1,100/yr	2,900/yr	4,000/yr
Fan Speed	1,560/yr	2,900/yr	4,460/yr

10.1.4.7 Recover Energy

The use of air-to-air heat exchangers permits the exchange of energy between an exhaust air stream(s) and a makeup air stream(s). Many of the exchangers will permit the exchange of only sensible heat while a few will permit the exchange of enthalpy (total heat). The transfer recovery efficiency of air-to-air heat exchangers varies from 55 percent to 90 percent, depending upon the type of heat exchanger and the face velocity.

10.1.4.8 Maintain Equipment

The physical condition of the air handling unit is important to its efficient operation. Filters should be cleaned or replaced as soon as the maximum allowable pressure drop across the filter is attained. If dirt builds up to a point where the pressure drop exceeds the maximum allowable, the resulting system pressure increase will reduce the fan's pressure and subsequently reduce the air handler's efficiency.

As mentioned in an earlier section, dampers should seal tightly. Air leakage due to poor damper operation or condition will result in added loading of the air handling unit. The fans should be checked for lint, dirt, or other causes for reduced flow.

10.2 HVAC Systems

In this section the HVAC will be treated like a system of different functions put together; in other words the transparency of individual components might not be very transparent. However, in some cases it is important to treat the whole operation in such a way. Exhibit 10.8 summarizes energy usage in buildings much of that can be contributed to HVAC, i.e., conditioning of buildings for personnel comfort. The remainder of this chapter will discuss some of the design factors in HVAC and energy conservation methods for HVAC systems.

Exhibit 10.8: Energy Use in Buildings

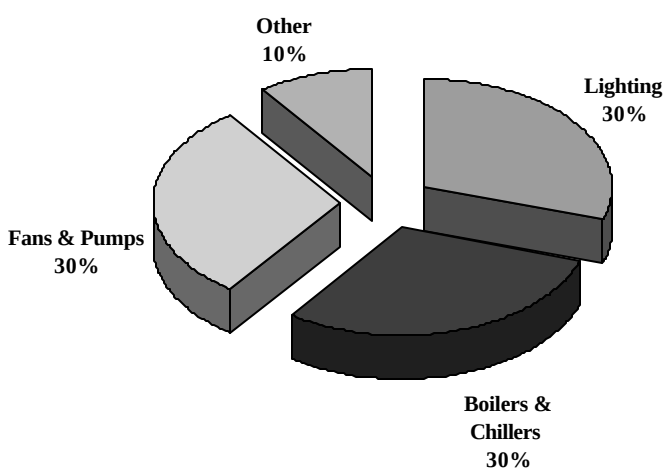

Notes

10.2.1 Equipment Sizing Practices

Usually all existing energy consuming systems are oversized. The reasons for oversizing of HVAC equipment include:

1. All HVAC design procedures are conservative.
2. A "Safety Factor" is then applied.
3. Design is for a near-extreme weather condition that is very seldom obtained (2-3% of annual hours).
4. Standard equipment size increments usually result in further oversizing.

Any attempt to conserve energy amplifies the effect of statements above. Operating efficiencies of equipment decrease with decreasing load - usually exponentially.

10.2.1.1 Reducing Capacity by Fan/Pump Slowdown

The capacity of HVAC systems can be reduced by using a slowdown technique to reduce the hp output. It should be noted that reducing the hp output of fan and pump motors will also reduce their efficiency. Exhibits 10.9 and 10.10 illustrate the affects of this technique.

$$\frac{HP_1}{HP_2} = \left[\frac{CFM_1}{CFM_2}\right]^3$$

OR

$$\frac{HP_1}{HP_2} = \left(\frac{GPM_1}{GPM_3}\right)^3$$

Thus: If CFM/GPM is reduced by 10%, the new hp will be 73% of original and for CFM/GPM reduction of 40%, new hp will be 22% of original.

Exhibit 10.9: Load vs. Efficiency

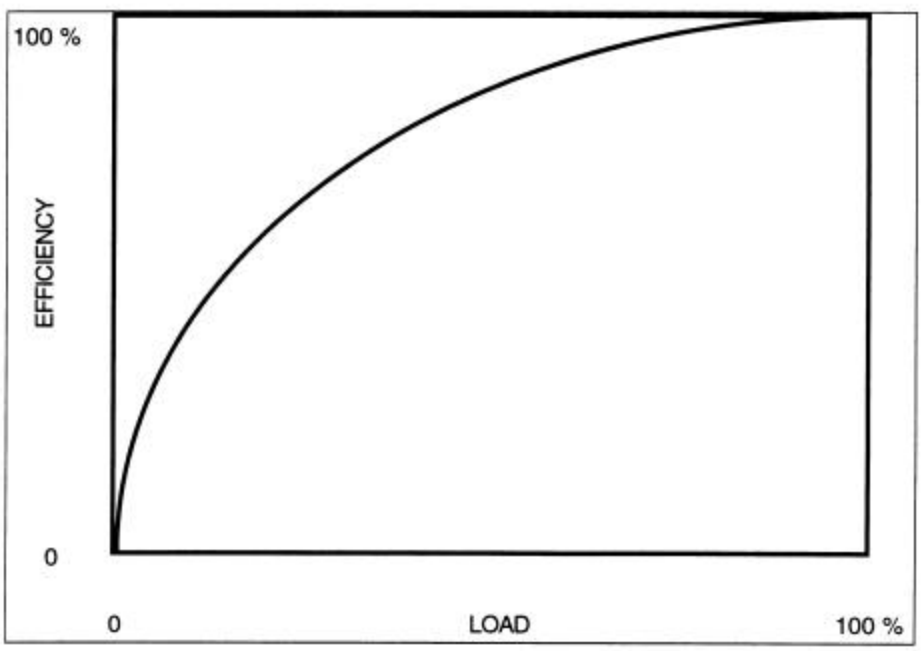

Exhibit 10.10: Control Valve Characteristics

Notes

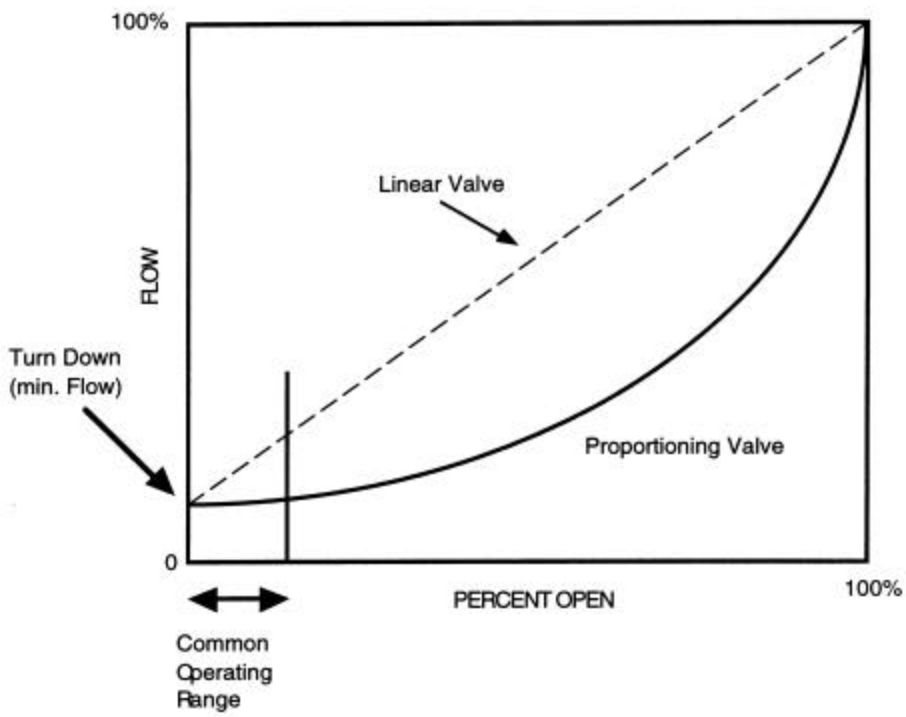

10.2.1.2 Maximize HVAC Savings

Energy conservation in HVAC systems can be maximized by using these techniques:

1. Reduce fan & pump horsepower - replace motors if necessary.
2. Reduce operating time - turn it off when not needed.
3. Retrofit existing HVAC systems to some form of VAV (Variable Air Volume) systems.
5. Eliminate or minimize reheat.
6. Maintain, calibrate & upgrade control systems.

These techniques were discussed in detail earlier in the chapter for independent systems but can be applied to HVAC system components. When evaluating HVAC requirements and energy conservation measures, facilities should take into consideration all heating and cooling loads as illustrated in Exhibit 10.11. This will provide the correct criteria for evaluations and cost savings estimates.

10.2.2 Design for Human Comfort

Providing comfortable conditions for people engaged in the working process is not a superfluous luxury, as might be viewed by some. Good working conditions definitely increase productivity, besides the indirect benefit of employees' satisfaction in their workplace. However, all the comfort should be provided at the minimum expense, whether it a company or a private residence.

Determination of the correct HVAC needs for a facility involves many steps, including:

- Determination of indoor conditions and how they affect energy use,
- Impact upon equipment selection, ducting, and register design,
- How to determine if certain conditions will meet acceptable comfort criteria.

Notes

The American Society of Heating, Refrigeration, and Air Conditioning Engineers (ASHRAE) publish standards for many aspects of HVAC design. One example is ASHRAE Standard 62-1989, "Ventilation for Acceptable Indoor Air Quality."

Exhibit 10.11: Heating and Cooling Loads

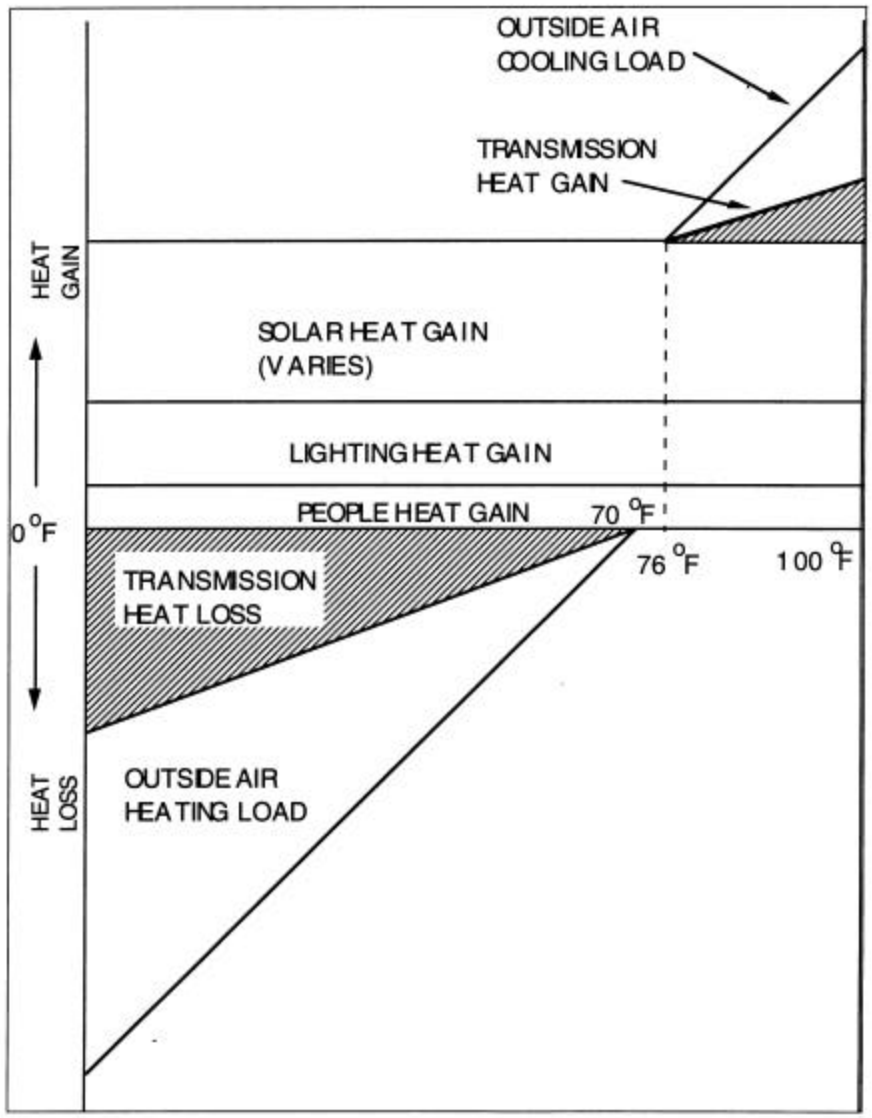

ASHRAE Standard 90-1980 "Energy Conservation in New Building Design" gives the following guidelines for energy conservation regarding HVAC systems.

1. Summer
   - $T_{room} \geq 78°F$
   - ϕ_{room}: Min HVAC energy use
   - ≥ 0.3 ACH (residential)

Notes

2. Winter
   - T room ≥ 72°F
   - $\phi_{room} \leq 30\%$
   - ≥ 0.3 ACH (residential)

Exhibit 10.12 defines the comfort zone for personnel using criteria such as temperature and vapor pressure. From this chart the comfort zone for consideration in the HVAC design is:

1. Summer
   - $73°F \leq T_{db} \leq 81°F$
   - $20\% \leq \phi \leq 60\%$
2. Winter
   - $68°F \leq T_{db} \leq 75°F$
   - $30\% \leq \phi \leq 70\%$

Most of the work on comfort since about 1970 has been to redefine the x-axis on the comfort chart to be more general (i.e., include effects of heat radiation, clothing, metabolism, air motion, etc.). There are different approached to quantifying comfort. To minutely quantify comfort is the EUROPEAN approach (reason: they don't heat their buildings as much). The UNITED STATES approach is to adjust the thermostat (becoming less acceptable to do so).

Exhibit 10.12: Comfort Zone Detail

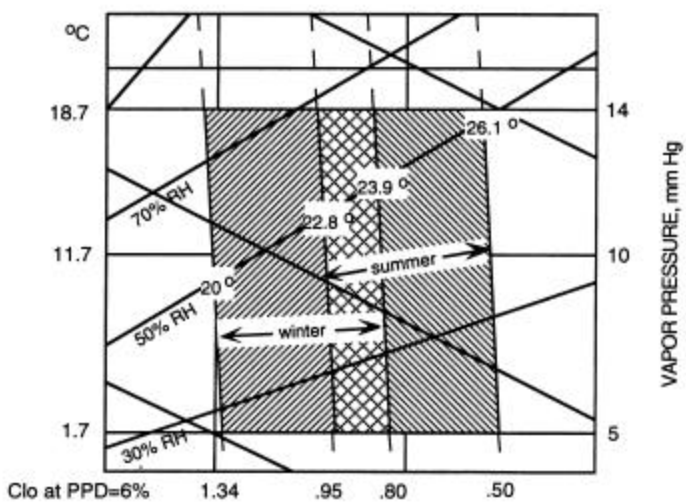

10.2.2.1 Factors Affecting Comfort

There are three major factors affecting personnel comfort. These are biological, dothing, and environmental indices.

Biological factors that affect personnel comfort include respiration, metabolism, and the types of activities personnel are performing. Exhibit 10.13 illustrates the biological factors that affect a persons comfort. For example, a persons average core temperature is:

$$T_{CORE} = 37°C \pm 1°C \ (98.6°F)$$

but their actual skin temperature may be:

$$T_{SKIN} = 92.7°F \text{ (buffer, adjusts to ambient)}$$

Notes

Exhibit 10.13: Biological Factors Affecting Comfort

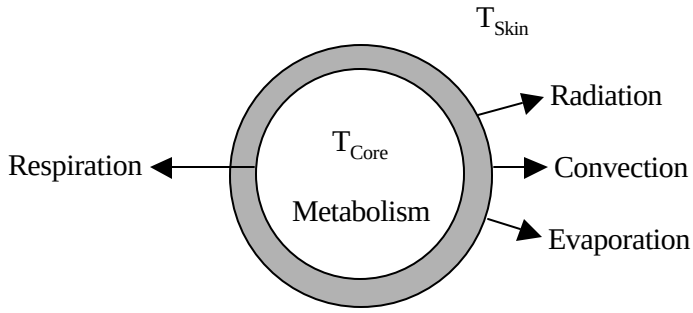

A person's activity has a great affect on their metabolic heat generation. For example an adult male's heat generation rate during three different activities would be:

- 100 W; seated at rest
- 850 W; heavy exercise
- 1,500 W; Olympic Athlete

Exhibit 10.14 lists the heat flux generated for various activities further illustrating how much activity affects comfort.

Exhibit 10.14: Heat Flux Generated by Various Activities

Various Activites[a]	Btu/h-ft^2	met[b]
Resting		
Sleeping	13	0.7
Reclining	15	0.8
Seated, quiet	18	1.0
Standing, relaxed	22	1.2
Walking (on the level)		
0.89 m/s	37	2.0
1.34 m/s	48	2.6
1.79 m/s	70	3.8
Office Activities		
Reading, seated	18	1.0
Writing	18	1.0
Typing	20	1.1
Filing, seated	22	1.2
Filing, standing	26	1.4
Walking about	31	1.7
Lifting/packing	39	2.1
Driving/Flying		
Car	18-37	1.0-2.0
Aircraft, routine	22	1.2

Exhibit 10.15: Heat Flux Generated by Various Activities (cont.)

Notes

Various Activites[a]	Btu/h-ft^2	met[b]
Aircraft, instrument landing	33	1.8
Aircraft, combat	44	2.4
Heavy vehicle	59	3.2
Miscellaneous Occupational Activities		
Cooking	29-37	1.6-2.0
House cleaning	37-63	2.0-3.4
Seated, heavy limb movement	41	2.2
Machine work		
Sawing (table saw)	33	1.8
Light (electrical industry)	37-44	2.0-2.4
Heavy	74	4.0
Handling 50-kg bags	74	4.0
Pick and shovel work	74-88	4.0-4.8
Miscellaneous Leisure Activities		
Dancing, social	44-81	2.4-4.4
Tennis, singles	66-74	3.6-4.0
Basketball	90-140	5.0-7.6
Wrestling, competitive	130-160	7.0-8.7

[a] Complied from various Sources. For additional information see Buskirk (1960), Passmore and Durnin (1967), and Webb (1964)

[b] 1met = 18.43 Btu/h-ft^2

Clothing is the second major factor affecting comfort. Clothing acts as insulation for the skin. As illustrated in Exhibit 10.15 and Exhibit 10.16, the insulation value of clothing can vary widely.

- Clothing resistance (clo); 1 *clo* = 0.155 m 2 · °C/W = 0.88 h-ft 2 -°F/Btu
- 1 *clo* ≈ R-1

Exhibit 10.16: Clothing Resistance

clo	Attire
½	Slacks, short sleeve shirt
1	Three-piece suit
4	Fur coat

Notes

Exhibit 10.17: Garment Insulation Values

Garment[a] Description	I/clo	Garment[a] Description	I/clo
Underwear		*Dresses and Skirts*[b]	
Man's briefs	0.04	Skirt (thin)	0.14
Panties	0.03	Skirt (thick)	0.23
Bra	0.01	Long-sleeve shirt dress (thin)	0.33
T-shirt	0.08	Long-sleeve shirt dress (thick)	0.47
Full slip	0.16	Short-sleeve shirt dress (thin)	0.29
Half slip	0.14	Sleeveless, scoop neck (thin)	0.23
Long underwear top	0.20	Sleeveless, scoop neck (thick)	0.27
Long underwear bottom	0.15	Sweaters	
Footwear		Sleeveless vest (thin)	0.13
Ankle-length athletic socks	0.02	Sleeveless vest (thick)	0.22
Calf-length socks	0.03	Long-sleeve (thin)	0.25
Knee socks (thick)	0.06	Long –sleeve (thick)	0.36
Panty hose stockings	0.02	*Suit Jackets and Vests (lined)*	
Sandals/thongs	0.02	Single-breasted (thin)	0.36
Slippers (quilted, pile-lined)	0.03	Single-breasted (thick)	0.44
Boots	0.10	Double breasted (thin)	0.42
Shirts and Blouses		Double breasted (thick)	0.48
Sleeveless, scoop-neck blouse	0.12	Sleeveless vest (thin)	0.10
Short-sleeve, dress shirt	0.19	Sleeveless vest (thick)	0.17
Long-sleeve, dress shirt	0.25	*Sleepwear and Robes*	
Long-sleeve, flannel shirt	0.34	Sleeveless, short gown (thin)	0.18
Short-sleeve, knit sport shirt	0.17	Sleeveless, long gown (thin)	0.20
Long-sleeve, sweat shirt	0.34	Short-sleeve hospital gown	0.31
Trousers and Coveralls		Long-sleeve, long gown (thick)	0.46
Short shorts	0.06	Long-sleeve pajamas (thick)	0.57
Walking shorts	0.08	Short-sleeve pajamas (thin)	0.42
Straight trousers (thin)	0.15	Long-sleeve, long wrap robe (thick)	0.69
Straight trousers (thick)	0.24		
Sweat pants	0.28	Long-sleeve, short wrap robe (thick)	0.48
Overalls	0.30		
Coveralls	0.49	Short sleeve, short robe (thin)	0.34

[a] "Thin" garments are made of lightweight, thin fabrics worn in the summer; "thick" garments are heavy weight, thick fabrics worn in the winter.

[b] Knee-length

Notes

Environmental indices that affect personnel comfort include factors such as temperature, humidity, and air flow. Operating temperatures that take into account humidity can be determined using the following equations.

$$T_o = \frac{h_r T_r + h_c T_a}{h_r + h_c}$$

$$T_o = \alpha T_r + (1 - \alpha) T_a$$

where T_r = mean radiant temperature

T_a = dry bulb temperature

$$\frac{1}{3} \le \alpha \le \frac{2}{3}$$

$$T_r = \frac{1}{N} \sum_{i=1}^{N} T_i$$

Exhibit 10.18 lists equations for convection heat transfer coefficients for various activities.

Exhibit 10.18: Convection Heat Transfer Coefficients

Equation	Limits	Condition	Remarks/Sources
$Hc=0.061V^{0.6}$	40<V<800	Seated w/moving air	Mitchell (1974)
Hc=0.55	0<V<40		
$Hc=0.475 + 0.44V^{0.67}$	30<V<300	Reclining w/moving air	Colin & Houdas (1967)
Hc=0.90	0<V<30		
Hc=0.92V0.53	100<V<400	Walking in still air	V is walking speed Nishi & Ga gge (1970)
$Hc=(M-0.85)^{0.39}$	1.1<M<3.0	Active in still air	Gagge (1976)
$Hc=0.146V^{0.39}$	100<V<400	Walking on treadmill in still air	V is treadmill speed Nishi & Gagge (1970)
$Hc=0.068V^{0.69}$	30<V<300	Standing in moving air	Seppeman (1972)
Hc=0.70	0<V<30		

Where h_c is in Btu/h ft^2

V is in fpm

M in met units; 1 met = 110.43 Btu/h ft^2

Standard conditions for comfort are given as:

- Icl = 0.60 *clo*
- m = 1 *met*
- V ≤ 20 *fpm*
- $T_r = T_a$
- i_m = 0.4 (Moisture permeability index) - (85% are comfortable)

Notes

10.2.3 General Types of Building Heating and Cooling

Exhibits 10.19 – 10.25 illustrate the various types of building heating and cooling systems that are currently available. These include:

- Sprayed coil dehumidifier,
- Evaporative cooling and air washer,
- Humidity control through cooling override,
- Single zone – all direct control from space thermostat,
- Dual duct air handling system,
- Multi-zone air handling unit, and
- Hybrid VAV control system.

Exhibit 10.19: Sprayed Coil Dehumidifier

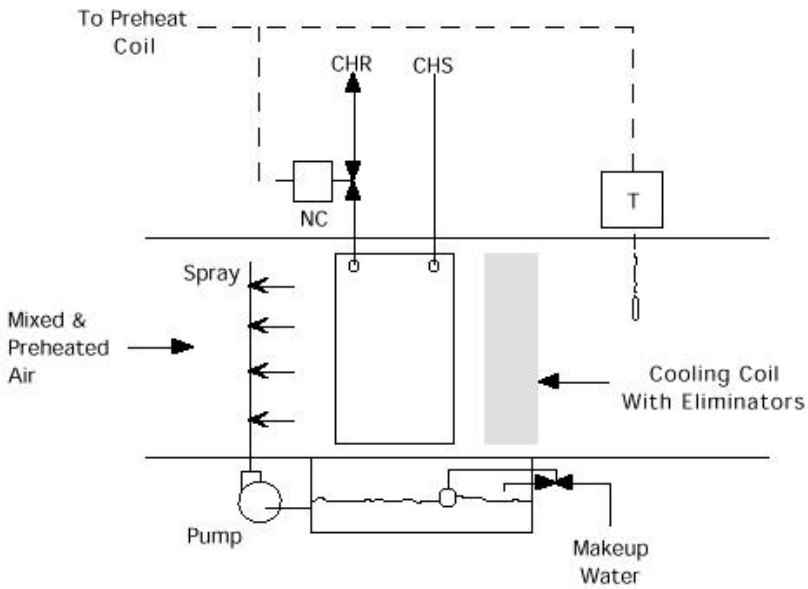

Exhibit 10.20: Evaporative Cooling & Air Washer

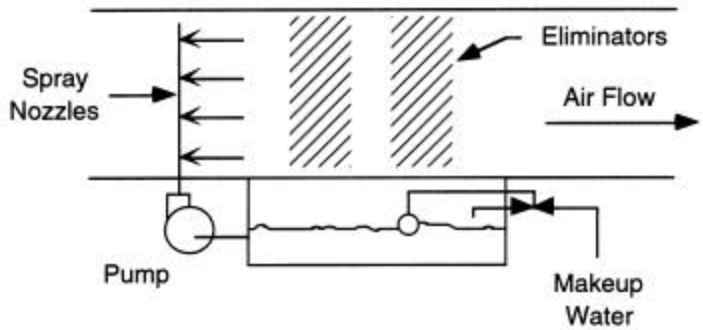

Notes

Exhibit 10.21: Humidity Control Through Cooling Override

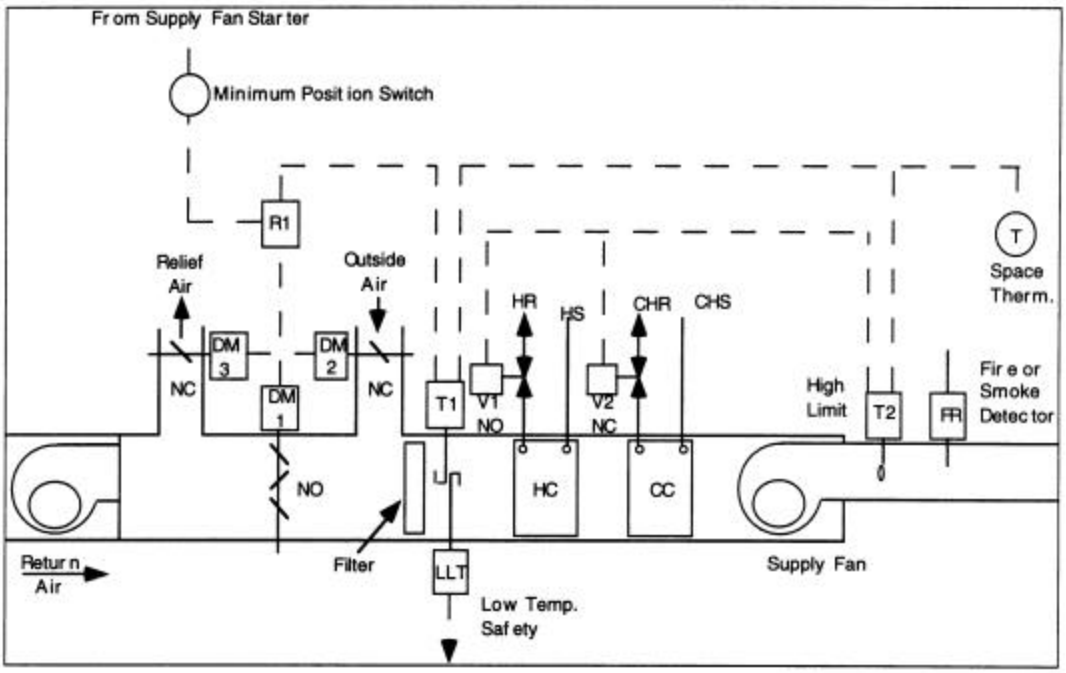

Exhibit 10.22: Single Zone - All Direct Control from Space Thermostat

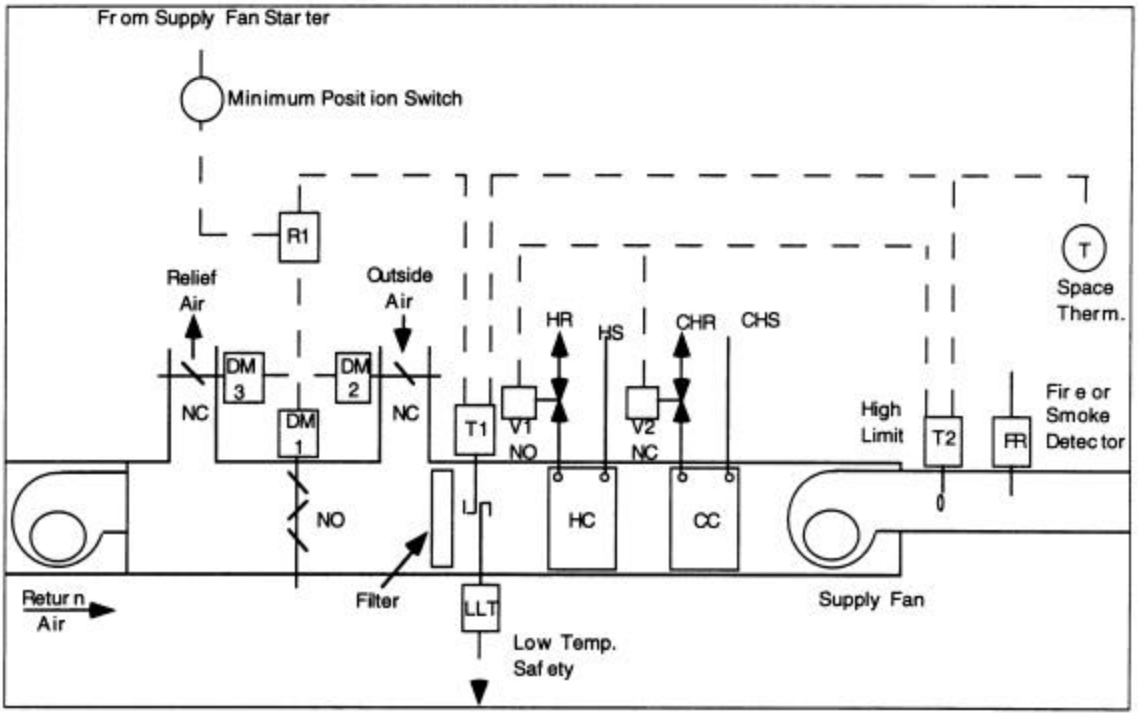

Notes

Exhibit 10.23: Dual Duct Air Handling System

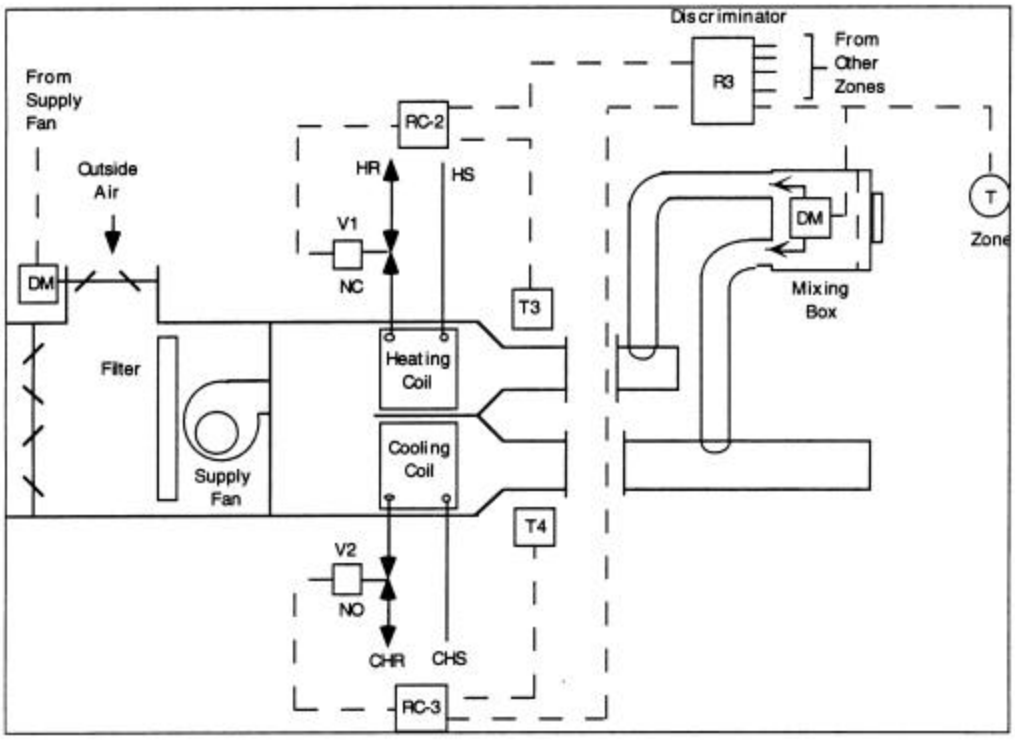

Exhibit 10.24: Multi-zone Air Handling Unit

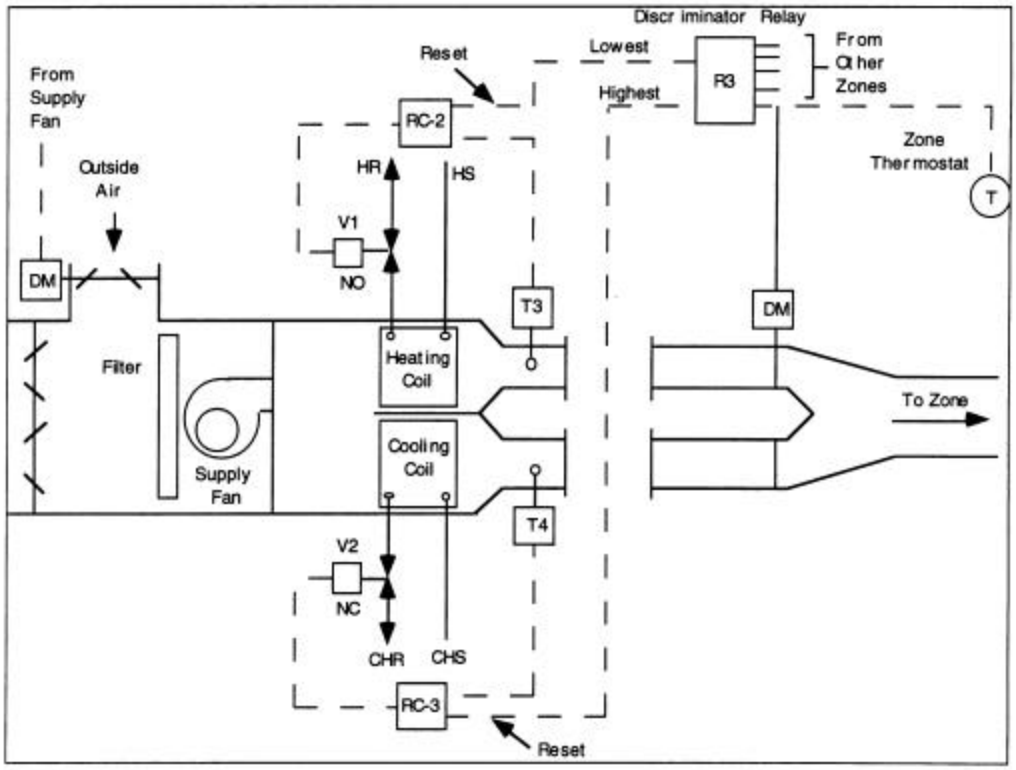

Notes

Exhibit 10.25: Hybrid VAV Control System

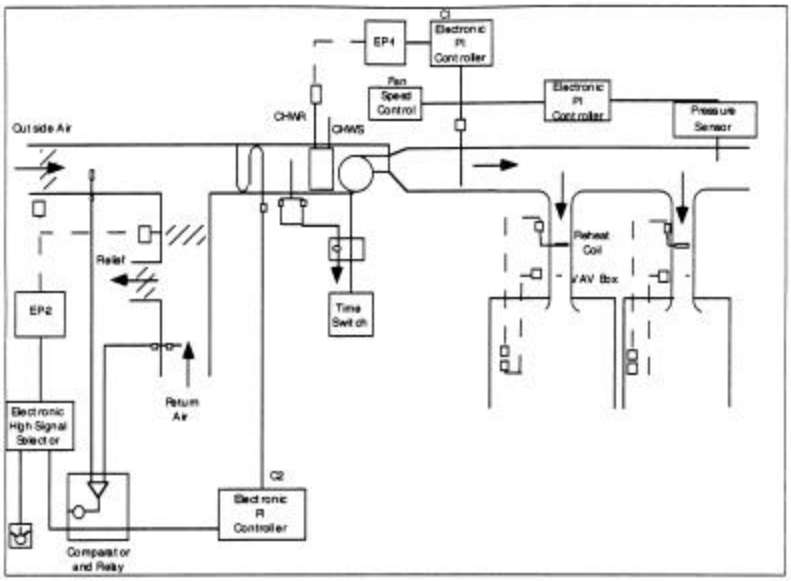

10.3 VENTILATION

Many operations require ventilation to control the level of dust, gases, fumes, or vapors. Excess ventilation for this purpose can add significantly to the heating load. All air that is exhausted from the building must be replaced by outside air.

During the heating season the air must be heated to room temperature by makeup air units or by infiltration and mixing with room air. When process heating is also involved, excess ventilation results in a loss of energy at all times.

A common problem during the winter heating season is negative building pressure resulting from attempting to exhaust more air than can be supplied. The most obvious problem encountered with air starvation is difficulty in opening doors. Negative pressure will lead to a number of other problems.

1. Heaters, ovens, and other plant equipment that depend on natural draft cannot operate properly under negative pressure and their combustion efficiency drops.
2. Downdrafts can cause condensation and corrosion. Fumes can also be drawn into the plant, affecting employee health and effectiveness.
3. Without proper exhaust, air stagnation creates concentrations of fumes or odors. Warm, moist air may even condense on manufactured products or mechanical and electrical equipment.
4. Workers near the building's perimeters may be subjected to drafts as the pressure differential between inside and outside draws cold air through doors and windows. Downdrafts can also occur around ventilation hoods that are temporarily inoperative. Turning up the thermostat causes employees in the middle of the building to roast and offers little help to those near the walls.
5. Exhaust fans cannot work at rated capacity under negative pressure causing dust, dirt, and contaminants in the plant increase. Maintenance, housekeeping, and operating costs rise, and equipment wears out much faster. If new exhaust fans are added without equivalent makeup air capacity, equipment efficiency suffers.

Exhaust airflows are usually established for the more demanding winter conditions when negative pressures may exist. Consequently, with no adjustment to the exhaust system during the non-heating season when the building pressure is at equilibrium with the outside air, the exhaust rate will be greater. Where no

Notes

process heating is involved, the resulting higher summer exhaust rate is not a problem. However, when process heating is involved, such as with ovens, the higher exhaust rate will increase the heat loss.

10.3.1 Losses

Losses of air from buildings are inevitable. The air which was heated will slowly seep through gaps around windows, doors and ducts. It is a phenomenon one has to deal with. On the other hand, not only that the total elimination of air leaks would be prohibitively expensive, but also could cause condensation and/or pressure inequality in the building with respect to the outside.

10.3.1.1 Room Air

The following two equations may be used to estimate makeup air heating costs on an hourly and yearly basis.

Hourly Cost = 1.08 x cfm x Δt x (C/eff.)

Yearly Cost = (0.154 x cfm x D x dg x C) / eff.

where,

cfm = air volume, cfm

Δt = outside temperature - inside temperature, °F

C = cost of fuel, $/Btu

eff = heater efficiency; if unknown, use 0.80 for indirect-fired heater

D = operating time, hours/week

dg = annual degree days: 4,848 for New York City, New York or 5,930 for Pittsburgh, Pennsylvania

For example, assume 10,000 cfm with 40°F outside temperature, operating 15 shifts per week.

Cost/hr = 1.08 x 10,000 x (70 - 40) x ($3.00/$10^6$ Btu) x (1/80%) = $1.215

Annual Cost = 0.154 x 10,000 x 120 x 4,848 x ($3.00/$10^6$ Btu) x (1/80%) = $3,360

10.3.1.2 High-Temperature Exhaust

In the case of a high-temperature exhaust, as from an oven, the loss is magnified by the higher temperatures of either the dry air or the air-water mixture. During the heating season, this loss also involves heating an equivalent amount of makeup air to room temperature before further heating to exhaust temperature in the oven.

An example of the potential saving for a reduction in exhaust for 1,000 cfm at 250°F is as follows:

1. Saving for heating outside air to 65°F, given:

   cfm = 1,000

   D = 120 operating hours per week

   dg = 2,500 degree days

   C = $4.24/MMBtu heat in steam

   Using the above formula:

   Annual savings = 0.154 x 1,000 x 120 x 2,500 x ($4.24/$10^6$) = $196/yr

2. Saving for reduction in process heat load (250°F - 65°F)

   Annual Savings = 1,000 x 1.08* x (250°F - 65°F) x 6,000 x ($4.24/$10^6$) ** = $5,083/yr

   Total Saving = $196 + $5,083 = $5,279/yr

Notes

* 1.08 = 60 min/hr x 0.075 lbs/cu ft x 0.24 specific heat of air

** If a direct-fired gas makeup unit is used, the air is heated at nearly 100 percent efficiency. For an indirect unit an efficiency of 80 percent or $3.75/MMBtu can be used.

Additional saving in fan horsepower is possible if fan speed is reduced.

10.3.1.3 Air -Water Mixture

The heat loss is considerably greater when water vapor is included with the exhaust, as occurs with washing or drying. As an example of the heat loss from an exhaust including water vapor, the enthalpy of dry air at 110°F is 26.5 Btu per pound; the enthalpy of a saturated mixture of air and water vapor is 87.5 Btu per pound of dry air. The extent of this loss emphasizes the importance of using minimum exhaust where heated baths are involved. A high temperature psychrometric chart can be used to determine enthalpies at other conditions.

10.3.2 Balance Air Flows

Too often no provision is made to supply sufficient makeup air. Consequently, it must leak through doors, windows, and stray openings, producing undesirable drafts in the vicinity of the leakage.

Barring the ability to make sufficient reduction in exhaust to balance the air supply and demand, the best practice is to add more makeup air units to supply heated air in amounts equal to that exhausted and distribute it in the region of the exhaust system. While this will contribute little to energy conservation, it will eliminate the problems associated with negative pressure.

Plant personnel should check all exhausts to determine if losses can be reduced or eliminated. Measures than can be taken to reduce exhaust losses are:

1. Shut off fans when equipment is down.
2. Reduce volume to a minimum.
3. Reduce temperature.
4. Recover exhaust.

10.3.2.1 Shut off Fans

The most obvious improvement is to shut off any exhaust fans that are not needed. Exhaust fans are often left running even if the equipment they are ventilating is down. Some typical examples are spray booths and ovens or dryers. Fans can also be left on during periods of no production, such as evenings or weekends.

10.3.2.2 Reduce Volume

The next best improvement is to reduce exhaust rates to the minimum. Some reduction in existing rates may be possible because:

1. Exhaust rates may have been established with a large margin of safety when energy costs were not a significant factor.
2. The exhaust rate may have been increased at one time to resolve a temporary problem, which no longer exists.
3. Rates may be set to satisfy the most extreme need, which may be far in excess of normal operation.

In the first case, a simple adjustment of the damper setting to reduce flow may be sufficient. Where production loads fluctuate, the damper setting can be varied with the load when practical.

Often, one of the most direct and easiest means to reduce the volume of exhaust air is by proper hood design. In many instances, equally effective ventilation can be provided with less exhaust by improving the design of the exhaust hoods. The result is lower fan power consumption and reduced heat loss. In

Notes

general, the most effective hood designs are those which completely surround the emission source with minimum openings to the surrounding area. The following are some guidelines for optimum hood design.

Enclosure

The more complete the enclosure, the less exhaust air is required. Exhaust hoods are commonly located at a considerable distance from the surface of a tank. As a consequence, room air is exhausted along with the fumes. Rates are also increased if control is upset by cross drafts in the area. The following steps can provide a more complete enclosure.

1. Extend the hood vertically on one or more sides. This approach can be taken where access is not necessary on all sides.
2. Provide a hanging drop cloth or plastic strips that will allow for access when necessary without undue interference with operation.

Distance from Source

If enclosing the source with side panels is not practical, the hood should be as close as possible to the source and shaped to control the area of contamination. The required volume varies as the square of the distance from the source.

Flanging

The addition of flanges will eliminate air flow from ineffective zones where no contaminant exists. Air requirements can be reduced as much as 25 percent by incorporating flanges in the hood design.

Capture Velocity

The airflow past the source must be sufficient to capture the contaminant. However, if no standards or arbitrary standards in excess of needs are used, proper capture velocity or volume should be determined to avoid unnecessary exhaust.

Large Openings

Where exhaust openings are of necessity large in size, the hood can be made more effective by incorporating multiple take-offs, slotted openings, baffles, etc. Hoods with this feature will provide more uniform flow over the area to be ventilated and reduce total air requirements.

Outside Air

The introduction of outside air, where possible, at the point of ventilation will reduce the amount of room air exhausted. Heating requirements will, therefore, be reduced to the extent the exhaust air includes outside air instead of heated room air.

10.3.2.3 Reduce Temperature

Process requirements usually dictate the temperature at which the process must be maintained. However, a review of conditions may indicate opportunities to reduce temperature in the following areas:

- Current practice maintains temperature above standard to provide a wide margin of safety.
- The standard was established arbitrarily or without adequate testing.
- The standard was established to handle a worst-case situation, which no longer exists or occurs rarely (at which time exhaust rate could be increased).

10.3.2.4 Recover Heat

Heat recovery from the exhaust air should be considered after first completing the steps to reduce exhaust loss by any of the above methods. Several precautions should be considered in the evaluation of a heat recovery system.

1. Because air is less dense than water, large volumes of air are required to approach the equivalent Btu content of wastewater. Where heat recovery from both systems cannot be beneficially utilized, a

Notes

heat recovery system for water is generally preferable to air because of the former's better payback and lower maintenance. The plant-wide potential for waste recovery should, therefore, be studied first to ensure the design of any installation will be coordinated with an overall plan.

2. Any evaluation of savings must reflect the actual hours of use. For example, if air-to-air heat recovery from an oven is planned for heating the building, the recovery system will be in use only during the heating season. Furthermore, if the oven is not operating continuously, the heat recovery system will be available for this purpose for an even shorter period.
3. Although considerable heat may be lost in exhaust gases, especially when a number of sources are involved, the potential for heat recovery is dependent on the temperature of the gases. When the temperature range is low (200°F to 400°F), the potential for economical recovery is minimized.
4. The exhaust gases may contain some contaminants that will foul heat exchanger surfaces. In this situation, the ease of cleaning the exchanger is of prime importance.

10.3.3 Types of Heat Exchangers

As the name indicates, the heat exchanger is a device where heat from one medium is transferred into another. This way, some of the energy otherwise lost is used to help achieve desired conditions. Several types of heat exchangers are available depending on the application.

10.3.3.1 Rotary Heat Exchanger

Because the matrix in this type of exchanger has fine air passages, the rotor may soon become blocked if it is installed in an air stream containing contaminants. This heat exchanger has the highest efficiency, recovering 70 to 85 percent of the exhaust energy, including both latent and sensible heat. It is best suited to a clean air stream since some blockages of the exhaust air to the supply side can occur.

10.3.3.2 Sealed Heat Pipe Heat Exchanger

The heat pipe operates on the principle that when heat is applied to one end of a sealed tube, evaporation of a fluid in the pipe occurs. The vapor flows to the cold end where it is condensed. The condensed working fluid is then transported by capillary action to the warm end where the cycle is repeated. In this exchanger, the fins mounted on the outside of the tube to aid heat transfer may also become blocked with contaminants. Heat exchanger efficiency decreases when deposits build up on the surface, so keeping the surfaces clean is important. The unit recovers 60 to 80 percent of the sensible heat.

The use of a filtering system and/or periodic cleaning are often necessary to ensure clean heat transfer surfaces. The advantages of the heat pipe are minimal maintenance, because it contains no moving parts; and no cross-contamination, because the exit and incoming gas streams are completely sealed off from each other.

10.3.3.3 Plate Heat Exchanger

Heat transfer is accomplished by counter flowing two streams between plates. This type of exchanger is less likely to become blocked with contaminants and is more easily cleaned. Maintenance is also minimized because there are no moving parts. This type is suitable for either air-to-air or air-to-water heat recovery. About 70 percent of the sensible heat is recovered by these units.

The equipment cost for an air-to-air heat exchanger from one manufacturer ranges from $0.60 to $1.60 per cfm depending on the size, usage, efficiency, airflow, pattern, etc. An air-to-water heat exchanger costs from $1.30 to $3.10 per cfm, again depending on efficiency, size, usage, etc. Installation costs range from 1 to 2.5 times the cost of the equipment.

If the exhaust gases contain oil mists and other contaminants, some form of filter unit may be necessary ahead of the heat exchanger. Either a conventional filter or electrostatic precipitator can be considered.

10.3.3.4 Coil-Run-Around System

The above three types of heat exchangers require the supply and exhaust stream to be brought together. A coil-run-around unit permits the two streams to be physically separated by using an intermediary

Notes

fluid, usually ethylene glycol, to transfer energy between the two streams. The ethylene glycol is circulated in a closed loop through heat exchangers in the "hot" and "cold" stream. Coil-run-around systems recover 60 to 65 percent of the sensible heat between the two streams.

10.3.3.5 Hot Oil Recovery System

This system has the advantages of eliminating heat exchanger fouling and reducing pollution abatement problems. In this system, exhausts are passed through cool, cascading oil, which absorbs most of the heat as well as the high boiling chemicals. The hot oil passes over exchange coils containing incoming process water and is then recycled.

Where flammable solvents are used, lower flammable limit (LFL) monitoring equipment is necessary. Improved LFL systems include self-checking equipment and completed control loops that allow the use of modulated dampers to provide for minimal safe ventilation requirements. The self-checking system eliminates much of the periodic need to calibrate and check the function of safety circuits. Accordingly, exhaust reduction can be considered for drying ovens containing solvent vapors. The capital expenditure for an LFL monitor is about $15,000.

REFERENCES

1. American Society of Heating, Refrigeration and Air Conditioning Engineers, *Handbook of* Fundamentals, 1972
2. Sherratt, A.F.C., Energy Conservation and Energy Management in Buildings, Applied Science Publishers, 1976
3. Southern California Gas Company, *How to Save Energy in Commercial Buildings*, Publication 7436
4. ASHRAE Standard 90-75, *Energy Conservation in New Building Design*, ASHRAE, 1975
5. Reay, D.A., *Industrial Energy Conservation*, Pergamon Press, 1977
6. Kenney, W.F., *Energy Conservation in the Process Industries*, Academic Press, 1984
7. Payne, G.A., *The Energy Managers' Handbook*, IPC Science and Technology Press, 1977

Notes

APPENDIX A

EPA REGIONAL OFFICES

Region #	Area's Included	EPA Regional Address	Regional Phone #
1	Maine, New Hampshire, Vermont, Massachusetts, Rhode Island, Connecticut	EPA Region1 John F. Kennedy Building Boston, MA 02203	(888) EPA-7341
2	New York, New Jersey, Puerto Rico, US Virgin Islands	EPA Region 2 290 Broadway - 26th Floor New York, New York 10007-1866	(212) 637-5000
3	Delaware, Maryland, Pennsylvania, Virginia, West Virginia, District of Columbia.	EPA Region 3 841 Chestnut Building Philadelphia, PA 19107	(215) 566-2900
4	Mississippi, Tennessee, Alabama, Georgia, Florida, Kentucky, South Carolina, North Carolina	EPA Region 4 Atlanta Federal Center 61 Forsyth Street, SW Atlanta, Georgia 30303-3104	(404) 562-9900
5	Illinois, Indiana, Michigan, Minnesota, Ohio, Wisconsin	EPA Region 5 77 W Jackson Blvd Chicago, IL 60604	(312) 353-2000
6	Arkansas, Louisiana, New Mexico, Oklahoma, Texas	EPA Region 6 Main Office 1445 Ross Avenue Suite 1200 Dallas, Texas 75202	(214) 665-2200
7	Iowa, Kansas, Missouri, Nebraska	EPA Region 7 726 Minnesota Ave. Kansas City, Kansas 66101	(913) 551-7003
8	Colorado, Montana, North Dakota, South Dakota, Utah, Wyoming	EPA Region 8 Office 999-18th St., Suite 500 Denver, Colorado 80202	(303) 312-6312
9	Arizona, California, Hawaii, Nevada, Guam, American Samoa.	EPA Region 9 Office 75 Hawthorne Street San Francisco, CA 94105	(415) 744-1500
10	Alaska, Idaho, Oregon, Washington	EPA Region 10 1200 6th Avenue Seattle, WA 98101	(206) 553-1200

Notes

ENERGY CONSERVATION RESOURCES

1. Silver, Daniel M. "The Sustainable Energy Guide: International Resources for Energy-Efficiency and Renewable Energy." International Institute for Energy Conservation Publications, Washington DC, 1994.
2. Energy Conservation Program Guide for Industry and Commerce, NBS Handbook 115 and Supplement, U.S. Department of Commerce and Federal Administration, U.S. Government Printing Office, 1975.
3. Industrial Market and Energy Management Guide, American Consulting Engineers Council, Research and Management Foundation, 1987.
4. Levers, W.D., The Electrical Engineer's Challenge in Energy Conservation., *IEEE Trans. Of Industrial Applications,* 1A-11,4,1975
5. Windett, A.S., *Reducing the Cost of Electricity Supply*, Gower Press, 1973
6. Zackrison, H.B., Energy Conservation Techniques for Engineers, Van Nostrand Reinhold Company, 1984.
7. California Environmental Protection Agency, *Waste Audit Study of the Electric Utility Industry,* Cal-EPA, Department of Toxic substance Control, December 1991.
8. Flavin, Christopher and Alan B. Durning. *Building on Success: The Age of Energy Efficiency*. Worldwatch Institute, Washington, D.C., 1988.
9. Culp, Archie W. *Principles of Energy Conversion*. McGraw-Hill, New York, 1991.
10. Freeman, S. David. *Energy: The New Era*. Walker, New York, 1974.
11. Shinskey, F. Greg. *Energy Conservation Through Control*. Academic Press, New York, 1978.
12. Dumas, Lloyd J. *The Conservation Response: Strategies for the Design and Operation of Energy-Using Systems*. Lexington Books, Lexington, Mass, 1976.
13. Hafemeister, David W. *Energy Sources: Conservation and Renewables.* AIP Conference Proceedings, American Institute of Physics, New York, 1985.
14. Stasiowski, Frank A. *Nine Hundred and Forty Three Ways to Save Energy.* Practice Management Associates, Ltd., Newton, Massachusetts, 1991.
15. Kreith, Frank and George Burmeister. *Energy Management and Conservation*. National Conference of State Legislatures, Denver, CO, 1993.
16. Geller, Howard S. and John M. DeCicco. *Energy Efficiency and Job Creation: The Employment and Income Benefits from Investing in Energy Conserving Technologies.* American Council for an Energy Efficient Economy, Washington, D.C., 1992.
17. Watson, Donald. *Energy Conservation Through Building Design*. McGraw-Hill, New York, 1979.
18. Institute of Electrical and Electronics Engineers. *IEEE Recommended Practice Energy Conservation and Cost-Effective Planning in Industrial Facilities.* IEEE , New York, 1984.
19. Kreith, Frank and Ronald West. *CRC Handbook of Energy Efficiency*. CRC Press, Boca Raton, 1997.

Notes

POLLUTION PREVENTION PUBLICATIONS

Title	EPA Document Number
The Automotive Refinishing Industry.	EPA 625/791/016
The Automotive Repair Industry.	EPA 625/791/013
The Commercial Printing Industry.	EPA 625/790/008
The Fabricated Metal Products Industry.	EPA 625/790/006
The Fiberglass-Reinforced And Composite Plastics Industry.	EPA 625/791/014
The Marine Maintenance And Repair Industry.	EPA 625/791/015
The Mechanical Equipment Repair Industry.	EPA 625/R92/008
Metal Casting And Heat Treating Industry.	EPA 625/R-92-009
The Metal Finishing Industry.	EPA 625/R92/011
Municipal Pretreatment Programs.	EPA 625/R93/006
Non-Agricultural Pesticide Users.	EPA 625/R93/009
The Paint Manufacturing Industry.	EPA 625/790/005
The Pesticide Formulating Industry.	EPA 625/790/004
The Pharmaceutical Industry.	EPA 625/791/017
The Photoprocessing Industry.	EPA 625/791/012
The Printed Circuit Board Manufacturing Industry.	EPA 625/790/007
Research And Educational Institutions.	EPA 625/790/010
Selected Hospital Waste Streams.	EPA 625/790/009
Wood Preserving Industry.	EPA 625/R93/014
OTHER MANUALS:	
Facility Pollution Prevention Guide	EPA 625/R92/088
Opportunities For Pollution Prevention Research To Support the 33/50 Program	EPA/600/R92/175
Life Cycle Design Guidance Manual.	EPA/600/R92/226
Life Cycle Assessment: Inventory Guidelines and Principles	EPA/600/R92/245
Pollution Prevention Case Studies Compendium	EPA/600/R92/046
Industrial Pollution Prevention Opportunities For The 1990's EPA	EPA/600/891/052

Notes

Title	EPA Document Number
Achievements In Source Reduction And Recycling For Ten Industries In The United States	EPA/600/291/051
Background Document On Clean Products Research And Implementation	EPA/600/290/048
Opportunities For Pollution Prevention Research To Support The33/50 Program	EPA/600/R92/175
Waste Minimization Practices At Two CCA Wood Treatment Plants	EPA/600/R93/168
WMOA Report And Summary – Fort Riley, Kansas	EPA/600/S2-90/031
WMOA Report And Summary – Philadelphia Naval Shipyard/ Governors Island	EPA/600/S2-90/062
Management Of Household And Small-Quality-Generator Hazardous Waste In The United States	EPA/600/S2-89/064
WMOA Report And Summary – Naval Undersea Warfare Engineering Station, Keport, WA	EPA/600/S2-91/030
WMOA Report And Summary – Optical Fabrication Laboratory, Fitzsimmins Army Medical Center, Denver, Colorado	EPA/600/S2-91/031
WMOA Report And Summary – A Truck Assembly Plant	EPA/600/S2-91/038
WMOA Report And Summary – A Photofinishing Facility	EPA/600/S2-91/039
WMOA Report And Summary – Scott Air Force Base	EPA/600/S2-91/054
Guidance Document For The Write Pilot Program With State And Local Governments	EPA/600/S8-89/070
Machine Coolant Waste Reduction By Optimizing Coolant Life	EPA/600/S2-90/033
Recovery Of Metals Using Aluminum Displacement	EPA/600/S2-90/032
Metal Recovery/Removal Using Non-Electrolytic Metal Recovery	EPA/600/S2-90/033
Evaluation Of Five Waste Minimization Technologies At The General Dynamics Pomona Division Plant	EPA/600/S2-91/067
An Automated Aqueous Rotary Washer For The Metal Fabrication Industry	EPA/600/Sr-92/188
Automotive And Heavy Duty Engine Coolant Recycling By Filtration	EPA/600/S2-91/066
Automotive And Heavy Duty Engine Coolant Recycling By Distillation	EPA/600/Sr-92/024
Onsite Waste Ink Recycling	EPA/600/Sr-92/251
Diaper Industry Workshop Report	EPA/600/S2-91/251

Notes

Title	EPA Document Number
Industrial Pollution Prevention Opportunities For The 1990's	EPA/600/Sr-91/052
Hospital Pollution Prevention Case Study	EPA/600/S2-91/024
Waste Minimization Audit Report: Case Studies Of Minimization Of Cyanide Waste From Electroplating Operations	EPA/600/S2-87/055
Waste Minimization Audits At Generators Of Corrosive And Heavy Metal Wastes	EPA/600/S2-87/056
Waste Minimization Audit Report: Case Studies Of Minimization Of Solvent Wastes From Parts Cleaning And From Electronic Capacitor Manufacturing Operations	EPA/600/S2-87/057
Waste Minimization In The Printed Circuit Board Industry – Case Studies	EPA/600/S2-88/008
Waste Minimization Audit Report: Case Studies Of Minimization Of Solvent Wastes And Electroplating Wastes At A DOD Installation	EPA/600/S2-88/010
Waste Minimization Audit Report: Case Studies Of Minimization Of Mercury-Bearing Wastes At A Mercury Cell Chloralkali Plant	EPA/600/S2-88/011
Pollution Prevention Opportunity Assessment: USDA Beltsville Agricultural Research Center, Beltsville, Maryland	EPA/600/Sr-93/008
Pollution Prevention Opportunity Assessment For Two Laboratories At Sandia National Laboratories	EPA/600/Sr-93/015
Ink And Cleaner Waste Reduction Evaluation For Flexographic Printers	EPA/600/Sr-93/086
Mobile Onsite Recycling Of Metalworking Fluids	EPA/600/Sr-93/114
Evaluation Of Ultrafiltration To Recover Aqueous Iron Phosphating/ Degreasing Bath	EPA/600/Sr-93/144
Recycling Nickel Electroplating Rinse Waters By Low Temperature Evaporation And Reverse Osmosis	EPA/600/Sr-93/160
WASTE MINIMIZATION ASSESSMENT FOR:	
Aerial Lifts.	EPA 600/S-94-011
Aluminum And Steel Parts.	EPA 600/S-94-010
Aluminum Cans.	EPA 600/M91/025
Aluminum Extrusions.	EPA 600/S-92-010
Automotive Air Conditioning Condensers And Evaporators.	EPA 600/S-92-007
Baseball Bats And Golf Clubs.	EPA 600/S-93-007
Caulk.	EPA 600/S-94-017

Notes

Title	EPA Document Number
Can-Manufacturing Equipment.	EPA 600/S-92-014
Chemicals.	EPA 600/S-92-004
Commercial Ice Machines And Ice Storage Bins.	EPA 600/S-92-012
Components For Automobile Air Conditioners.	EPA 600/S-92-009
Compressed Air Equipment Components.	EPA 600/M91/024
Custom Molded Plastic Products.	EPA 600/S-92-034
Cutting And Welding Equipment.	EPA 600/S-92-029
Electrical Rotating Devices.	EPA 600/S-94-018
Felt Tip Markers, Stamp Pads, And Rubber Cement.	EPA 600/S-94-013
Fine Chemicals Using Batch Processes.	EPA 600/S-92-055
Finished Metal And Plastic Parts.	EPA 600/S-94-005
Finished Metal Components.	EPA 600/S-92-030
Gravure-Coated Metalized Paper And Metalized Film	EPA 600/S-94-008
Heating, Ventilating, And Air Conditioning Equipment.	EPA 600/M91/019
Industrial Coatings.	EPA 600/S-92-028
Injection-Molded Car And Truck Mirrors.	EPA 600/S-92-032
Iron Castings And Fabricated Sheet Metal Parts.	EPA 600/S-95-008
Labels And Flexible Packaging.	EPA 600/S-95-004
Machined Parts.	EPA 600/S-92-031
Metal Bands, Clamps, Retainers, And Tooling.	EPA 600/S-92-015
Metal-Plated Display Racks.	EPA 600/S-92-019
Microelectronic Components.	EPA 600/S-94-015
Military Furniture.	EPA 600/S-92-017
Motor Vehicle Exterior Mirrors.	EPA 600/S-92-020
New And Reworked Rotogravure Printing Cylinders.	EPA 600/S-95-005
Orthopedic Implants.	EPA 600/S-92-064
Outdoor Illuminated Signs.	EPA 600/M91/016
Paper Rolls, Ink Rolls, Ink Ribbons, And Magnetic And Thermal Transfer Ribbons.	EPA 600/S-95-003

Notes

Title	EPA Document Number
Parts For Truck Engines	EPA 600/S-94-019
Penny Blanks And Zinc Products.	EPA 600/S-92-037
Permanent-Magnet DC Electric Motors.	EPA 600/S-92-016
Pliers And Wrenches.	EPA 600/S-94-004
Prewashed Jeans.	EPA 600/S-94-006
Printed Circuit Boards.	EPA 600/M91/022
Printed Circuit Boards.	EPA 600/S-92-033
Printed Labels.	EPA 600/M91/047
Printed Plastic Bags.	EPA 600/M/90/017
Product Carriers And Printed Labels.	EPA 600/S-93-008
Prototype Printed Circuit Boards.	EPA 600/M91/045
Rebuilt Railway Cars And Components.	EPA 600/M91/017
Refurbished Railcar Bearing Assemblies.	EPA 600/M91/044
Rotogravure Printing Cylinders.	EPA 600/S-93-009
Screwdrivers.	EPA 600/S-94-003
Sheet Metal Cabinets And Precision Metal Parts.	EPA 600/S-92-021
Sheet Metal Components.	EPA 600/S-92-035
Silicon-Controlled Rectifiers And Schottky Rectifiers.	EPA 600/S-92-036
Surgical Implants.	EPA 600/S-94-009
Treated Wood Products.	EPA 600/S-92-022
Water Analysis Instrumentation	EPA 600/S-92-013
WASTE REDUCTION ACTIVIES AND OPTIONS FOR A:	
Printer Of Forms And Supplies For The Legal Profession	EPA/600/S-92/003
Nuclear Powered Electrical Generating Station	EPA/600/S-92/025
State DOT Maintenance Facility	EPA/600/S-92/026
Local Board Of Education In New Jersey	EPA/600/S-92/027
Manufacturer Of Finished Leather	EPA/600/S-92/039
Manufacturer Of Paints Primarily For Metal Finishing	EPA/600/S-92/040
Manufacturer Of Writing Instruments	EPA/600/S-92/041

Notes

Title	EPA Document Number
Manufacturer Of Room Air Conditioner Units And Humidifiers	EPA/600/S-92/042
Autobody Repair Facility	EPA/600/S-92/043
Fabricator And Finisher Of Steel Computer Cabinets	EPA/600/S-92/044
Manufacturer Of Artists' Supply Paints	EPA/600/S-92/045
Manufacturer Of Wire Stock Used For Production Of Metal Items	EPA/600/S-92/046
Manufacturer Of Commercial Refrigeration Units	EPA/600/S-92/047
Waste Reduction: Pollution Prevention Publications Transporter Of Bulk Plastic Pellets	EPA/600/S-92/048
Manufacturer Of Electroplated Wire	EPA/600/S-92/049
Manufacturer Of Systems To Produce Semiconductors	EPA/600/S-92/050
Remanufacture Of Automobile Radiators	EPA/600/S-92/051
Manufacturer Of Fire Retardant Plastic Pellets And Hot Melt Adhesives	EPA/600/S-92/052
Printing Plate Preparation Section Of A Newspaper	EPA/600/S-92/053
Manufacturer Of General Purpose Paints And Painting Supplies	EPA/600/S-92/054
Manufacturer Of Fine Chemicals Using Batch Processes	EPA/600/S-92/055
Laminator Of Cardboard Packages	EPA/600/S-92/056
Manufacturer Of Hardened Steel Gears	EPA/600/S-92/057
Scrap Metal Recovery Facility	EPA/600/S-92/058
Manufacturer Of Electroplating Chemical Products	EPA/600/S-92/059
Manufacturer Of Plastic Containers By Injection Molding	EPA/600/S-92/060
Fossil Fuel-Fired Electrical Generating Station	EPA/600/S-92/061
Manufacturer Of Commercial Dry Cleaning Equipment	EPA/600/S-92/062
Electrical Utility Transmission System Monitoring And Maintenance Facility	EPA/600/S-92/063
Manufacturer Of Orthopedic Implants	EPA/600/S-92/064

TECHNOLOGY TRANSFER INFORMATION SOURCES

Notes

GOVERNMENT- NATIONAL

Provider: Asbestos Abatement/Management Ombudsman
Telephone: (703) 305-5938 or (800) 368-5888
Hours: 8:00 a.m. - 4:30 p.m. (EST) M-F
Abstract: The assigned mission of the Asbestos Ombudsman is to provide to the public information on handling, abatement, and management of asbestos in schools, the work place, and the home. Interpretation of the asbestos in schools requirements is provided. Publications to explain recent legislation are also available. Services are provided to private citizens, community services, state agencies, local agencies, local public and private school systems, abatement contractors, and consultants.

Provider: Association of Small Business Development Centers
Membership: State small business development centers
Name: Jim King
Position: Chairman, Government Relations
Telephone: (518) 443-5398
Fax: (518) 465-4992
E-mail: kingj@sysadm.suny.edu
Name: Kathleen Dawson
Position: Executive Director
Telephone: (703) 448-6124
Fax: (703) 448-6125

Provider: U.S. EPA Small Business Ombudsman Clearinghouse/Hotline
Telephone: (703) 305-5938, (800) 368-5888
Hours: Message recorder is on 24 hours a day.
Abstract: The mission of the U.S. EPA Small Business Ombudsman Clearinghouse/Hotline is to provide information to private citizens, small communities, small business enterprises, and trade associations representing the small business sector regarding regulatory activities. Technical questions are answered following appropriate contacts with program office staff members. Questions addressed cover all media program aspects within U.S. EPA.

Provider: Green Lights and Energy Star Programs
Telephone: (202) 775-6650, (888) STAR-YES [782-7937]
Abstract: The success of the Green Lights program depends on the actions taken by Partners and Allies to implement energy-efficient lighting upgrade projects, ultimately resulting in sustained pollution prevention. U.S. EPA's participant support programs provide planning and implementation guidance for successful lighting upgrade projects. U.S. EPA offers four types of support programs: Information, Planning, Analysis Tools, and Communications.

Provider: Indoor Air Quality Information Clearinghouse (IAQINFO)
Telephone: (800) 438-4318
Fax: (202) 484-1510
E-mail: iaqinfo@aol.com
Hours: 9:00 a.m. to 5:00 p.m. (EST), M-F; after-hours voice mail
Abstract: The purpose of the IAQINFO is to help you locate information to answer your questions about indoor air pollution. IAQINFO can provide information on (1) the sources, health effects, testing and measuring, and controlling indoor air pollutants; (2) constructing and maintaining homes and buildings to minimize indoor air quality problems; (3) existing standards and guidelines related to indoor air quality; and (4) general information on Federal and State legislation.

Notes

Provider: Information Resources Center (formerly the library)
Telephone: (202) 260-5922
Hours: 8:00 a.m. - 5:00 p.m., M-F (walk-in)
E-mail: libraryhq@epamail.epa.gov
Abstract: The Information Resources Center is open to U.S. EPA personnel and the public. It provides access to U.S. EPA publications, books and journals related to environmental issues, and to the Federal regulations.

Provider: National Radon Helpline
Telephone: (800) 55-RADON [557-2366]
Abstract: The National Radon Helpline provides general information and respond to consumer questions on radon.

Provider: National Response Center
Telephone: (800) 424-8802
Abstract: The National Response Center (NRC) is the federal government's national communications center, and is staffed 24 hours a day by U.S. Coast Guard. The NRC receives all reports of releases involving hazardous substances and oil that trigger the federal notification requirements under several laws. Reports to the NRC activate the National Contingency Plan and the federal government's response capabilities. It is the responsibility of the NRC staff to notify the pre-designated on-scene coordinator (OSC) assigned to the area of the incident and to collect available information on the size and nature of the release, the facility or vessel involved, and the party(ies) responsible for the release. The NRC maintains reports of all releases and spills in a national database called the Emergency Response Notification System.

Provider: National Small Flows Clearinghouse
Telephone: (800) 624-8301, (304) 293-4191
Hours: 8:00 a.m. - 5:00 p.m. (EST) M-F
Abstract: The National Small Flows Clearinghouse was established to provide small communities with information and technical assistance to address wastewater treatment issues.

Provider: Oil Spill Program Information Line
Telephone: (202) 260-2342
E-mail: oilinfo@epamail.epa.gov
Abstract: U.S. EPA maintains an oil spill program information line to answer questions and provide information to the public and owners and operators of regulated facilities on the following topics: Facility Response Plan rulemaking, Emergency Response Notification System (ERNS), NCP product schedule, and other questions related to U.S. EPA's oil spill program.

Provider: Radon Fix-It Line
Telephone: (800) 644-6999
Hours: 12:00 p.m. and 8:00 p.m. (EST), M-F
Abstract: The Consumer Research Council, a nonprofit consumer organization, operates the Radon Fix-it Line, which is free of charge. The Radon Fix-it Line provides guidance and encouragement to consumers with elevated radon levels of 4 pCi/L or higher to take the necessary steps toward fixing their homes.

Provider: Safe Drinking Water Hotline
Telephone: (800) 426-4791
Hours: 9:00 a.m. - 5:30 p.m. (EST), M-F
E-mail: hotline-sdwa@epamail.epa.gov
Abstract: The Hotline assists Public Water Systems, State and local officials, and members of the public with information on U.S. EPA regulations and programs authorized by the Safe Drinking Water Act Amendments of 1986 and 1996. This includes drinking water regulations, other related drinking water topics, wellhead protection and ground water protection program information.

Notes

GOVERNMENT – REGIONAL

Provider: National Response Center - regional programs

Telephone:		
	Region I	(617) 223-7265
	Region II	(732) 548-8730
	Region III	(215) 566-3255
	Region IV	(404) 562-8700
	Region V	(312) 353-2318
	Region VI	(214) 665-2222
	Region VII	(913) 281-0991
	Region VIII	(303) 293-1788
	Region IX	(415) 744-2000
	Region X	(206) 553-1263

Provider: Region I Air Quality Information Line
Telephone: (617) 565-9145
Abstract: The Air Quality Information Line is a voice mail system that routes the caller to the appropriate Region I air quality point of contact for the purpose of lodging complaints, asking questions, requesting information, and providing tips.

Provider: Region I General Information
Telephone: (617) 565-3420
Abstract: This is the telephone number for the operator and employee locator for Region I. Questions, requests for information, and complaints are routed to the appropriate office or person.

Provider: Region II Superfund Investigators Hotline
Telephone: (800) 245-2738
Abstract: This hotline is exclusively for the public with potential information on Superfund sites.

Provider: Region II Superfund Ombudsman
Telephone: (888) 283-7626
Abstract: The Ombudsman assists the public and regulated community in resolving problems concerning any requirement under Superfund. The Ombudsman handles complaints from citizens and the regulated community, obtains facts, sorts information, and substantiates policy.

Provider: Region III Customer Service Hotline
Telephone: (800) 438-2474 (within Region III)
(215) 566-5122 (outside Region III)
Abstract: The Customer Service Hotline provides general information to the public regarding the Region and its programs. The hotline also sends out materials, and refers inquiries to the appropriate office or person.

Provider: Region III Small Business Assistance Center
Telephone: (800) 228-8711(within Region III)
(215) 566-5122 (outside Region III)
Abstract: The center helps small businesses comply with U.S. EPA regulations.

Provider: Region III Superfund Ombudsman
Telephone: (800) 553-2509(within Region III)
(215) 566-5122 (outside Region III)
Abstract: The Ombudsman assists the public and regulated community in resolving problems concerning any requirement under Superfund. The Ombudsman handles complaints from citizens and the regulated community, obtains facts, sorts information, and substantiates policy.

Provider: Region IV Helpline

Notes

Telephone: (800) 241-1754
Abstract: The Region IV Helpline provides general information to the public regarding the Region and its programs. The helpline also sends out materials upon request, and refers inquiries to the appropriate office or person.

Provider: Region VII U.S. EPA Action Line
Telephone: (913) 551-7122 (Kansas City calling area)
(800) 223-0425
Abstract: The action line provides assistance to citizens on any issue under U.S. EPA's purview. The Action Line receives all incoming inquiries and refers them to the appropriate offices.

Provider: Region IX Public Information Center
Telephone: (415) 744-1500
Hours: 8:00 a.m. - 12:00 p.m. and 1:00 p.m. - 4:00 p.m., M-F
Abstract: The Region IX Public Information Center provides general information to the public regarding the Region and its programs. The Center also sends out materials upon request, and refers inquiries to the appropriate office or person.

Provider: Region IX RCRA Hotline/Information Line
Telephone: (415) 744-2074
Hours: 1:00 p.m. - 4:00 p.m., M-F
Abstract: The RCRA Hotline/Information Line general information to the public regarding the RCRA regulatory requirements and related issues. The information line also routes inquiries to the appropriate office or person.

GOVERNMENT - STATE

Provider: Alabama Small Business Assistance Program
Membership: Businesses classified as non-major sources
Businesses with 100 or fewer employees
Independently owned businesses
Internet URL: www.adem.state.al.us
Affiliations: Alabama Department of Environmental Management, Air Division
Name: James Moore
Position: Program Manager
Telephone: (334) 271-7861
Fax: (334) 271-7950
E-mail: Rbr@adem.state.al.us
Name: Toll Free Hotline (National)
Telephone: (800) 533-2336

Provider: Alabama Small Business Development Center
Membership: Businesses classified as non-major sources
Businesses with 100 or fewer employees
Internet URL: www.cba.ua.edu/~cba/sbdc.html
Affiliations: Association of Small Business Development Centers
U.S. Small Business Administration
Name: John Sandefur
Position: State Director
Telephone: (205) 934-7260
Fax: (205) 934-7645
E-mail: asbd003@uabdpo.dpo.uab.edu

Provider: Alaska Small Business Assistance Program
Membership: Businesses classified as non-major sources

Notes

	Businesses with 100 or fewer employees
	Independently owned businesses
Internet URL:	www.state.ak.us/akdec
Affiliations:	Alaska Department of Environmental Conservation
Name:	David Wigglesworth
Position:	Acting Director
Telephone:	(907) 269-7571
Fax:	(907) 269-7600
E-mail:	CompAsst@envircon.state.ak.us
Name:	Scott Lytle
Position:	Manager
Name:	Toll Free Hotline (State)
Telephone:	(800) 510-2332

Provider:	Alaska Small Business Development Center
Membership:	Businesses classified as non-major sources
	Businesses with 100 or fewer employees
	Independently owned businesses
Affiliations:	Association of Small Business Development Centers
	U.S. Small Business Administration
Name:	Jan Fredericks
Position:	State Director
Telephone:	(907) 274-7232
Fax:	(907) 274-9524
E-mail:	anjaf@uaa.alaska.edu

Provider:	Arizona Small Business Assistance Program
Membership:	Businesses classified as non-major sources
	Businesses with 100 or fewer employees
	Independently owned businesses
Internet URL:	www.adeq.state.az.us/admin/do/comp.htm
Affiliations:	Arizona Department of Environmental Quality, Customer Service
Name:	Gregory Workman
Position:	Program Manager
Telephone:	(602) 204-4337
Fax:	(602) 207-4872
E-mail:	workman.gregory@ev.state.az.us
Name:	Toll Free Hotline (State)
Telephone:	(800) 234-5677

Provider:	Arizona Small Business Development Center
Membership:	Businesses classified as non-major sources
	Businesses with 100 or fewer employees
	Independently owned businesses
Internet URL:	www.dist.maricopa.edu/sbdc
Affiliations:	Association of Small Business Development Centers
	Maricopa Community College
	U.S. Small Business Administration
Name:	Michael York
Position:	State Director
Telephone:	(602) 731-8722
Fax:	(602) 731-8729
E-mail:	york@maricopa.edu

Provider:	Arkansas Small Business Assistance Program

Notes

Membership:	Businesses classified as non-major sources Businesses with 100 or fewer employees Independently owned businesses
Affiliations:	Arkansas Department of Pollution Control and Ecology
Name:	Robert Graham
Position:	Small Business Ombudsman
Telephone:	(501) 682-0708
Fax:	(501) 682-0707
E-mail:	help-sba@adeq.state.ar.us

Provider:	Arkansas Small Business Development Center
Membership:	Businesses classified as non-major sources Businesses with 100 or fewer employees Independently owned businesses
Internet URL:	www.ualr.edu/~sbdcdept
Affiliations:	Association of Small Business Development Centers U.S. Small Business Administration University of Arkansas at Little Rock
Name:	Janet Nye
Position:	State Director
Telephone:	(501) 324-9043
Fax:	(501) 324-9049
E-mail:	jmnye@ualr.edu

Provider:	California Small Business Assistance Program
Membership:	Businesses classified as non-major sources Businesses with 100 or fewer employees Independently owned businesses
Internet URL:	www.arb.ca.gov/cd/cd.htm
Affiliations:	California Environmental Protection Agency, Air Resources Bureau
Name:	Peter Venturini
Position:	Director
Telephone:	(916) 445-0650
Fax:	(916) 327-7212
E-mail:	helpline@arb.ca.gov
Name:	Toll Free Hotline (State)
Telephone:	(800) 272-4572

Provider:	California Small Business Development Center Program
Membership:	Businesses classified as non-major sources Businesses with 100 or fewer employees Independently owned businesses
Internet URL:	www.commerce.ca.gov/small
Affiliations:	Association of Small Business Development Centers
Name:	Kim Neri
Position:	State Director
Telephone:	(916) 324-5068
Fax:	(916) 324-5084
E-mail:	kimn@smtp.doc.ca.gov

Provider:	California South Coast Small Business Assistance Program
Membership:	Businesses classified as non-major sources Businesses with 100 or fewer employees Independently owned businesses
Internet URL:	www.aqmd.gov/business

Notes

Affiliations: California South Coast Air Quality Management District
Name: Natalia Porche
Position: Director
Telephone: (909) 396-3218
Fax: (909) 396-3335
Name: Toll Free Hotline (National)
Telephone: (800) 388-2121

Provider: Colorado Small Business Assistance Program
Membership: Businesses classified as non-major sources
Businesses with 100 or fewer employees
Independently owned businesses
Internet URL: www.state.co.us/gov_dir/regulatory_dir/orr.htm
Affiliations: Colorado Department of Health, Air Pollution Control Division
Name: Nick Melliadis
Position: Director
Telephone: (303) 692-3175
Fax: (303) 782-5493
Name: Toll Free Hotline
Telephone: (800) 333-7798

Provider: Colorado Small Business Development Center Program
Membership: Businesses classified as non-major sources
Businesses with 100 or fewer employees
Independently owned businesses
Internet URL: www.state.co.us/gov_dir/obd/sbdc.htm
Affiliations: Association of Small Business Development Centers
U.S. Small Business Administration
Name: Joseph Bell
Position: State Director
Telephone: (303) 892-3809
Fax: (303) 892-3848
E-mail: sbdclcl@attmail_com
Name: Toll Free Hotline
Telephone: (800) 726-8000

Provider: Connecticut Small Business Assistance Program
Membership : Businesses classified as non-major sources
Businesses with 100 or fewer employees
Independently owned businesses
Affiliations: Connecticut Department of Environmental Protection
Name: Glen Daraskevich
Position: Program Manager
Telephone: (860) 424-3545
Fax: (860) 424-4063

Provider: Connecticut Small Business Development Center
Membership: Businesses classified as non-major sources
Businesses with 100 or fewer employees
Independently owned businesses
Internet URL: www.sbdc.uconn.edu
Affiliations: Association of Small Business Development Centers
U.S. Small Business Administration
University of Connecticut
Name: Dennis Gruell

Notes

Position:	State Director
Telephone:	(860) 486-4135
Fax:	(860) 486-1576
E-mail:	gruell@ct.sbdc.uconn.edu

Provider:	Delaware Small Business Assistance Program
Membership:	Businesses classified as non-major sources Businesses with 100 or fewer employees Independently owned businesses
Internet URL:	www.dnrec.state.de.us/tbusperm.htm
Affiliations:	Delaware Department of Natural Resource Conservation University of Delaware
Name:	George Petitgout
Position:	Small Business Ombudsman
Telephone:	(302) 739-6400
Fax:	(302) 739-6242
Name:	Phil Cherry
Position:	Program Director

Provider:	Delaware Small Business Development Center
Membership:	Businesses classified as non-major sources Businesses with 100 or fewer employees Independently owned businesses
Affiliations:	Association of Small Business Development Centers U.S. Small Business Administration
Name:	Clinton Tymes
Position:	State Director
Telephone:	(302) 831-1555
Fax:	(302) 831-1423
E-mail:	43220@brahms.udel.edu

Provider:	District of Columbia Small Business Assistance Program
Membership:	Businesses classified as non-major sources Businesses with 100 or fewer employees Independently owned businesses
Affiliations:	District of Columbia ERA, Air Resources Management Division
Name:	Olivia Achuko
Position:	Program Manager
Telephone:	(202) 645-6093
Fax:	(202) 645-6102

Provider:	District of Columbia Small Business Development Center
Membership:	Businesses classified as non-major sources Businesses with 100 or fewer employees Independently owned businesses
Internet URL:	www.cldc.howard.edu/~husbdc
Affiliations:	Association of Small Business Development Centers Howard University U.S. Small Business Administration
Name:	Woodrow McCutchen
Position:	Executive Director
Telephone:	(202) 806-1550
Fax:	(202) 806-1777
E-mail:	husbdc@cldc.howard.edu

Notes

Provider: Florida Small Business Assistance Program
Membership: Businesses classified as non-major sources
Businesses with 100 or fewer employees
Independently owned businesses
Internet URL: www.dep.state.fl.us/air/programs/sbap/index.htm
Affiliations: Florida Department of Environmental Protection, Bureau of Air Regulations
Name: Bob Daugherty
Position: SBAP Principal
Telephone: (904) 488-1344
Fax: (904) 922-6979
E-mail: clark_l@dep.state.fl.us
Name: Toll Free Hotline (State)
Telephone: (800) 722-7457

Provider: Florida Small Business Development Center Network
Membership: Businesses classified as non-major sources
Businesses with 100 or fewer employees
Independently owned businesses
Internet URL: www.fsbdc.uwf.edu
Affiliations: Association of Small Business Development Centers
U.S. Small Business Administration
University of West Florida
Name: Jerry Cartwright
Position: State Director
Telephone: (904) 444-2060
Fax: (904) 444-2070
E-mail: fsbdc@uwf.edu

Provider: Georgia Small Business Assistance Program
Membership: Businesses classified as non-major sources
Businesses with 100 or fewer employees
Independently owned businesses
Internet URL: www.DNR.State.Ga.US/dnr/environ
Affiliations: Georgia Department of Natural Resources, Air Protection Bureau
Name: Anita Dorsey-Word
Position: Program Manager
Telephone: (404) 362-2656
Fax: (404) 363-7100

Provider: Georgia Small Business Development Center
Membership: Businesses classified as non-major sources
Businesses with 100 or fewer employees
Independently owned businesses
Internet URL: www.sbdc.uga.edu
Affiliations: Association of Small Business Development Centers
U.S. Small Business Administration
University of Georgia
Name: Henry Logan, Jr.
Position: State Director
Telephone: (706) 542-6762
Fax: (706) 542-6776
E-mail: sbdcdir@uga.cc.uga.edu

Provider: Hawaii Small Business Assistance Program
Membership: Businesses classified as non-major sources

Notes

	Businesses with 100 or fewer employees
	Independently owned businesses
Affiliations:	Hawaii Department of Health, Clean Air Branch
Name:	Robert Tam
Position:	Program Manager
Telephone:	(808) 586-4200
Fax:	(808) 586-4370

Provider:	Hawaii Small Business Development Center Network
Membership:	Businesses classified as non-major sources
	Businesses with 100 or fewer employees
	Independently owned businesses
Internet URL:	www.maui.com/~sbdc/hilo.html
Affiliations:	Association of Small Business Development Centers
	U.S. Small Business Administration
	University of Hawaii at Hilo
Name:	Darryl Mleynek
Position:	State Director
Telephone:	(808) 974-7515
Fax:	(808) 974-7683
E-mail:	darrylm@interpac.net

Provider:	Idaho Small Business Assistance Program
Membership:	Businesses classified as non-major sources
	Businesses with 100 or fewer employees
	Independently owned businesses
Affiliations:	Idaho Department of Environmental Quality
Name:	Doug McRoberts
Position:	Small Business Ombudsman
Telephone:	(208) 373-0298
Fax:	(208) 373-0417
E-mail:	dmcrober@deq.state.id.us

Provider:	Idaho Small Business Development Center
Membership:	Businesses classified as non-major sources
	Businesses with 100 or fewer employees
	Independently owned businesses
Internet URL:	www.idbsu.edu/isbdc
Affiliations:	Association of Small Business Development Centers
	Boise State University
	U.S. Small Business Administration
Name:	Jame Hogge
Position:	State Director
Telephone:	(208) 385-1640
Fax:	(208) 385-3877
E-mail:	jhogge@bsu.idbsu.edu

Notes

Provider:	Illinois Small Business Development Center
Membership:	Businesses classified as non-major sources Businesses with 100 or fewer employees Independently owned businesses
Internet URL:	www.commerce.state.il.us
Affiliations:	Association of Small Business Development Centers U.S. Small Business Administration
Name:	Jeff Mitchell
Position:	State Director
Telephone:	(217) 524-5856
Fax:	(217) 524-0171
E-mail:	jeff.mitchell@accessil.com
Name:	Toll Free Hotline (State)
Telephone:	(800) 252-3998

Provider:	Illinois Small Business Environmental Assistance Program
Membership:	Businesses classified as non-major sources Businesses with 100 or fewer employees Independently owned businesses
Internet URL:	www.commerce.state.il.us/dcca/files/fs/ba/ba35.htm
Affiliations:	Illinois Department of Commerce and Community Affairs
Name:	Mark Enstrom
Position:	Program Manager
Telephone:	(217) 524-0169
Fax:	(217) 785-6328

Provider:	Indiana Small Business Assistance Program
Membership:	Businesses classified as non-major sources Businesses with 100 or fewer employees Independently owned businesses
Internet URL:	www.state.in.us
Affiliations:	Indiana Department of Environmental Mgmt, Office of Pollution Prevention
Name:	Maggie McShane
Position:	Office of Business Relations
Telephone:	(317) 232-5964
Fax:	(317) 233-5627

Provider:	Indiana Small Business Development Center Network
Membership:	Businesses classified as non-major sources Businesses with 100 or fewer employees Independently owned businesses
Affiliations:	Association of Small Business Development Centers U.S. Small Business Administration
Name:	Stephen Thrash
Position:	Executive Director
Telephone:	(317) 264-6871
Fax:	(317) 264-3102
E-mail:	sthrash@in.net
Name:	Toll Free Fax on Demand Hotline
Fax:	(800) 726-8000

Provider:	Iowa Air Emissions Assistance Program
Membership:	Businesses classified as non-major sources Businesses with 100 or fewer employees Independently owned businesses

Notes

Internet URL:	www.iwrc.org
Affiliations:	Iowa Waste Reduction Center University of Northern Iowa
Name:	John Konefes
Position:	Director
Telephone:	(319) 273-2079
Fax:	(319) 273-2926
Name:	Toll Free Hotline (State)
Telephone:	(800) 422-3109

Provider:	Iowa Small Business Development Center
Membership:	Businesses classified as non-major sources Businesses with 100 or fewer employees Independently owned businesses
Internet URL:	www.iowasbdc.org
Affiliations:	Association of Small Business Development Centers Iowa State University U.S. Small Business Administration
Name:	Ronald Manning
Position:	State Director
Telephone:	(515) 292-6351
Fax:	(515) 292-0020
E-mail:	rmanning@iastate.edu

Provider:	Kansas Small Business Assistance Program
Membership:	Businesses classified as non-major sources Businesses with 100 or fewer employees Independently owned businesses
Internet URL:	www.sbeap.niar.twsu.edu
Affiliations:	Kansas Department of Health and Environment University of Kansas
Name:	Frank Orzulak
Position:	Director
Telephone:	(913) 864-3978
Fax:	(913) 864-5827
E-mail:	ceet@falcon.ku.edu
Name:	Toll Free Hotline (State)
Telephone:	(800) 578-8898

Provider:	Kansas Small Business Development Center
Membership:	Businesses classified as non-major sources Businesses with 100 or fewer employees Independently owned businesses
Affiliations:	Association of Small Business Development Centers U.S. Small Business Administration
Name:	Debbie Bishop
Position:	State Director
Telephone:	(913) 296-6514
Fax:	(913) 291-3261
E-mail:	ksbdc@cjnetworks.com

Provider:	Kentucky Small Business Development Center
Membership:	Businesses classified as non-major sources Businesses with 100 or fewer employees Independently owned businesses

Notes

Internet URL: www.gatton.gws.uky.edu/KentuckyBusiness/kbeap
Affiliations: Association of Small Business Development Centers
U.S. Small Business Administration
University of Kentucky
Name: Janet Holloway
Position: State Director
Telephone: (606) 257-7668
Fax: (606) 323-1907
E-mail: cbejh@pop.uky.edu

Provider: Kentucky -University of Kentucky Business Environmental Assistance Program
Membership: Businesses classified as non-major sources
Businesses with 100 or fewer employees
Independently owned businesses
Internet URL: gatton.gws.uky.edu/KentuckyBusiness/kbeap/kbeap.ht
Affiliations: Kentucky Department of Natural Resources and Environmental Protection
University of Kentucky
Name: Greg Copely
Position: Director
Telephone: (606) 257-1131
Fax (606) 323-1907
E-mail: kbeap@pop.uky.edu
Name: Toll Free Hotline (State)
Telephone: (800) 562-2327

Provider: Louisiana Small Business Assistance Program
Membership: Businesses classified as non-major sources
Businesses with 100 or fewer employees
Independently owned businesses
Internet URL: www.deq.state.la.us/oarp/sbap/sbap.html
Affiliations: Louisiana Department of Environmental Quality (Air)
Name: Toll Free Hotline (State)
Telephone: (800) 259-2890
Name: Vic Tompkins
Position: Director
Telephone: (504) 765-2453
Fax: (504) 765-0921
E-mail: sbap@deq.state.la.us

Provider: Louisiana Small Business Development Center
Membership: Businesses classified as non-major sources
Businesses with 100 or fewer employees
Independently owned businesses
Internet URL: leap.nlu.edu/html/lsbdc/index.htm
Affiliations: Association of Small Business Development Centers
Northeast Louisiana University
U.S. Small Business Administration
Name: Dr. John Baker
Position: State Director
Telephone: (318) 342-5506
Fax: (318) 342-5510
E-mail: brbaker@alpha.nlu.edu

Provider: Maine Small Business Assistance Program
Membership: Businesses classified as non-major sources

Notes

	Businesses with 100 or fewer employees
	Independently owned businesses
Internet URL:	www.state.me.us/dep
Affiliations:	Maine Department of Environmental Protection, Office of Pollution Prevention
Name:	Brian Kavanah
Position:	Program Coordinator
Telephone:	(207) 287-6188
Fax:	(207) 287-7826
E-mail:	brian.w.kavanah@state.me.us

Provider:	Maine Small Business Development Center
Membership:	Businesses classified as non-major sources
	Businesses with 100 or fewer employees
	Independently owned businesses
Internet URL:	www.usm.maine.edu/~sbdc
Affiliations:	Association of Small Business Development Centers
	U.S. Small Business Administration
	University of Southern Maine
Name:	Charles Davis
Position:	State Director
Telephone:	(207) 780-4420
Fax:	(207) 780-4810
E-mail:	msbdc@portland.maine.edu

Provider:	Maryland Small Business Assistance Program
Membership:	Businesses classified as non-major sources
	Businesses with 100 or fewer employees
	Independently owned businesses
Internet URL:	www.mde.state.md.us/epsc/sbap.html
Affiliations:	Maryland Department of the Environment, Air & Radiation Mgt. Admin.
Name:	Lorrie Del Pizzo
Position:	Project Manager
Telephone:	(410) 631-6772
Fax:	(410) 631-4477
Name:	Toll Free Hotline (National)
Telephone:	(800) 433-1247

Provider:	Maryland Small Business Development Center Network
Membership:	Businesses classified as non-major sources
	Businesses with 100 or fewer employees
	Independently owned businesses
Affiliations:	Association of Small Business Development Centers
	U.S. Small Business Administration
Name:	James Graham
Position:	State Director
Telephone:	(301) 403-8300
Fax:	(301) 403-8303
E-mail:	dwirth@mbs.umd.edu

Provider:	Massachusetts Small Business Assistance Program
Membership:	Businesses classified as non-major sources
	Businesses with 100 or fewer employees
	Independently owned businesses
Affiliations:	Massachusetts Exec. Office of Env. Affairs, Office of Technical Assistance
Name:	George Frantz

Notes

Position: Program Director
Telephone: (617) 727-3260
Fax: (617) 727-3827

Provider: Massachusetts Small Business Development Center Network
Membership: Businesses classified as non-major sources
Businesses with 100 or fewer employees
Independently owned businesses
Internet URL: www.umassp.edu/msbdc
Affiliations: Association of Small Business Development Centers
University of Massachusetts - Amherst
Name: John Ciccarelli
Position: State Director
Telephone: (413) 545-6301

Fax: (413) 545-1273
E-mail: j.ciccarelli@dpc.umass.edu

Provider: Michigan Small Business Assistance Program
Membership: Businesses classified as non-major sources
Businesses with 100 or fewer employees
Independently owned businesses
Internet URL: www.deq.state.mi.us/ead/iasect/eac.html
Affiliations: Michigan Department of Natural Resources
Name: Dave Fiedler
Position: Manager, Clean Air Asst. Prog.
Telephone: (517) 373-0607
Fax: (517) 335-4729
E-mail: eac@deq.state.mi.us
Name: Toll Free Hotline (National)
Telephone: (800) 662-9278

Provider: Michigan Small Business Development Center
Membership: Businesses classified as non-major sources
Businesses with 100 or fewer employees
Independently owned businesses
Internet URL: BizServe.com/sbdc
Affiliations: Association of Small Business Development Centers
U.S. Small Business Administration
Wayne State University
Name: Ronald Hall
Position: State Director
Telephone: (313) 964-1798
Fax: (313) 964-3648
E-mail: ron@misbdc.wayne.edu

Provider: Minnesota Small Business Assistance Program
Membership: Businesses classified as non-major sources
Businesses with 100 or fewer employees
Independently owned businesses
Internet URL: www.pca.state.mn.us/programs/sbap_p.html
Affiliations: Minnesota Pollution Control Agency
Name: Barbara Conti
Position: Program Coordinator
Telephone: (612) 297-7709

Notes

Fax:	(612) 297-7709
E-mail:	barbara.conti@pca.state.mn.us
Name:	Phyllis Strong
Position:	Compliance Asst. Specialist
E-mail:	phyllis.strong@pca.state.mn.us
Name:	Toll Free Hotline (State)
Telephone:	(800) 657-3938

Provider:	Minnesota Small Business Development Center
Membership:	Businesses classified as non-major sources Businesses with 100 or fewer employees Independently owned businesses
Internet URL:	www.d.umn.edu/~jjacobs1/sbdc.html
Affiliations:	Association of Small Business Development Centers U.S. Small Business Administration
Name:	Mary Kruger
Position:	State Director
Telephone:	(612) 297-5770
Fax:	(612) 296-1290
E-mail:	mary.kruger@state.mn.us

Provider:	Mississippi Small Business Assistance Program
Membership:	Businesses classified as non-major sources Businesses with 100 or fewer employees Chemical marketers Independently owned businesses
Affiliations:	Mississippi Department of Environmental Quality
Name:	Jesse Thompson
Position:	BAP Principal
Telephone:	(601) 961-5171
Fax:	(601) 961-5742
E-mail:	jesse_thompson@deq.state.ms.us
Name:	Toll Free Hotline (National)
Telephone:	(800) 725-6112

Provider:	Mississippi Small Business Development Center
Membership:	Businesses classified as non-major sources Businesses with 100 or fewer employees Independently owned businesses
Internet URL:	www.olemiss.edu/depts/mssbdc
Affiliations:	Association of Small Business Development Centers U.S. Small Business Administration
Name:	Raleigh Byars
Position:	State Director
Telephone:	(601) 232-5001
Fax:	(601) 232-5650
E-mail:	rbyars@olemiss.edu

Provider:	Missouri Small Business Development Center
Membership:	Businesses classified as non-major sources Businesses with 100 or fewer employees Independently owned businesses
Internet URL:	www.missouri.edu/~sbdwww
Affiliations:	Association of Small Business Development Centers U.S. Small Business Administration

Notes

	University of Missouri
Name:	Max Summers
Position:	State Director
Telephone:	(573) 882-0344
Fax:	(573) 884-4297
E-mail:	sbdc-mso@ext.missouri.edu

Provider:	Missouri Small Business Technical Assistance Program
Membership:	Businesses classified as non-major sources Businesses with 100 or fewer employees Independently owned businesses
Internet URL:	www.state.mo.us/dnr/deq/tap/hometap.htm
Affiliations:	Missouri Department of Natural Resources
Name:	Byron Shaw, Jr.
Position:	Chief, Business Assistance Unit
Telephone:	(573) 526-5352
Fax:	(573) 526-5808
Name:	Toll Free Hotline (National)
Telephone:	(800) 361-4827

Provider:	Montana Small Business Assistance Program
Membership:	Businesses classified as non-major sources Businesses with 100 or fewer employees Independently owned businesses
Internet URL:	www.deq.mt.gov/pcd/index.htm
Affiliations:	Montana Department of Environmental Quality, Air Quality Division
Name:	Mark Lambrecht
Position:	Project Manager
Telephone:	(406) 444-1424
Fax:	(406) 406-4441
Name:	Toll Free Hotline (National)
Telephone:	(800) 433-8773

Provider:	Montana Small Business Development Center
Membership:	Businesses classified as non-major sources Businesses with 100 or fewer employees Independently owned businesses
Affiliations:	Association of Small Business Development Centers U.S. Small Business Administration
Name:	Ralph Closure
E-mail	Acting Director
Telephone:	(406) 444-4780
Fax:	(406) 444-1872
E-mail	rclosure@mt.gov

Provider:	Nebraska Small Business Assistance Program
Membership:	Businesses classified as non-major sources Businesses with 100 or fewer employees Independently owned businesses
Affiliations:	Nebraska Department of Environmental Quality
Name:	Dan Eddinger
Position:	SBAP Principal and Ombudsman
Telephone:	(402) 471-3413
Fax:	(402) 471-2909
E-mail:	edh@nccibm.artpnc.eta.gov

Notes

Provider:	Nebraska Small Business Development Center
Membership:	Businesses classified as non-major sources Businesses with 100 or fewer employees Independently owned businesses
Internet URL:	www.nbdc.unomaha.edu
Affiliations:	Association of Small Business Development Centers U.S. Small Business Administration University of Nebraska at Omaha
Name:	Robert Bernier
Position:	State Director
Telephone:	(402) 554-2521
Fax:	(402) 554-3473
E-mail:	rbernier@cbafaculty.unomaha.edu

Provider:	Nevada Small Business Assistance Program
Membership:	Businesses classified as non-major sources Businesses with 100 or fewer employees Independently owned businesses
Affiliations:	Nevada Department of Environmental Protection
Name:	David Cowperthwaite
Position:	Small Business Program Manager
Telephone:	(702) 687-4670
Fax:	(702) 687-5856
Name:	Janet Goldman
Position	Technical Asst. Coordinator
Telephone:	(702) 784-3164
Name:	Toll Free Hotline (State)
Telephone:	(800) 992-0900

Provider:	Nevada Small Business Development Center
Membership:	Businesses classified as non-major sources Businesses with 100 or fewer employees Independently owned businesses
Internet URL:	www.scs.unr.edu/nsbdc
Affiliations:	Association of Small Business Development Centers U.S. Small Business Administration University of Nevada, Reno
Name:	Sam Males
Position:	State Director
Telephone:	(702) 784-1717
Fax:	(702) 784-4337
E-mail:	wmoore@scs.unr.edu
Name:	Toll Free Hotline (State)
Telephone:	(800) 882-3233

Provider:	New Hampshire Small Business Assistance Program
Membership:	Businesses classified as non-major sources Businesses with 100 or fewer employees Independently owned businesses
Affiliations:	New Hampshire Department of Environmental Services, Air Resources Division
Name:	Rudolph Cartier
Position:	Small Business Ombudsman
Telephone:	(603) 271-1379
Fax:	(603) 271-1381

Notes

E-mail: cartier@de5arsb.mv.com
Name: Toll Free Hotline (State)
Telephone: (800) 837-0656

Provider: New Hampshire Small Business Development Center
Membership: Businesses classified as non-major sources
Businesses with 100 or fewer employees
Independently owned businesses
Internet URL: www.crminc.com/sbdc/index.htm
Affiliations: Association of Small Business Development Centers
U.S. Small Business Administration
University of New Hampshire
Name: Mary Collins
Position: State Director
Telephone: (603) 862-2200
Fax: (603) 862-4876
E-mail: LM1@christa.unh.edu

Provider: New Jersey Small Business Assistance Program
Membership: Businesses classified as non-major sources
Businesses with 100 or fewer employees
Independently owned businesses
Internet URL: www.state.nj.us/dep
Affiliations: New Jersey Dept. of Environmental Protection, Office of Permit Information
Name: Chuck McCarty
Position: Director
Telephone: (609) 292-3600
Fax: (609) 777-1330

Provider: New Jersey Small Business Development Center
Membership: Businesses classified as non-major sources
Businesses with 100 or fewer employees
Independently owned businesses
Internet URL: www.nj.com/njsbdc
Affiliations: Association of Small Business Development Centers
Rutgers University
Name: Brenda Hopper
Position: State Director
Telephone: (973) 353-5950
Fax: (973) 353-1110
E-mail: bhopper@andromeda.rutgers.edu

Provider: New Mexico Small Business Assistance Program
Membership: Businesses classified as non-major sources
Businesses with 100 or fewer employees
Independently owned businesses
Affiliations: New Mexico Environmental Department, Air Quality Bureau
Name: Lany Weaver
Position: Program Manager
Telephone: (505) 827-0042
Fax: (505) 827-0045
Name: Toll Free Hotline (National)
Telephone: (800) 810-7227

Provider: New Mexico Small Business Development Center

Notes

Membership: Businesses classified as non-major sources
Businesses with 100 or fewer employees
Independently owned businesses
Affiliations: Association of Small Business Development Centers
Santa Fe Community College
Name: J. Roy Miller
Position: State Director
Telephone: (505) 438-1362
Fax: (505) 471-9469
E-mail: rmiller@santa-fe.cc.nm.us

Provider: New York Small Business Assistance Program
Membership: Businesses classified as non-major sources
Businesses with 100 or fewer employees
Independently owned businesses
Affiliations: New York State Environmental Facilities Corporation
Name: Marian Mudar
Position: Environmental Program Manager
Telephone: (518) 457-9135
Fax: (518) 485-8494
E-mail: mudar@nyefc.org
Name: Toll Free Hotline (State)
Telephone: (800) 780-7227

Provider: New York Small Business Development Center
Membership: Businesses classified as non-major sources
Businesses with 100 or fewer employees
Independently owned businesses
Affiliations: Association of Small Business Development Centers
Name: James King
Position: State Director
Telephone: (518) 443-5398
Fax: (518) 465-4992
E-mail: kingjl@sysadm.suny.edu

Provider: North Carolina Small Business and Technical Center
Membership: Businesses classified as non-major sources
Businesses with 100 or fewer employees
Independently owned businesses
Internet URL: www.sbtdc.org
Affiliations: Association of Small Business Development Centers
Name: Scott Daugherty
Position: Executive Director
Telephone: (919) 715-7272
Fax: 919) 715-7777
E-mail: srdaughe.sbdc@mhs.unc.edu

Provider: North Carolina Small Business Assistance Program
Membership: Businesses classified as non-major sources
Businesses with 100 or fewer employees
Independently owned businesses
Affiliations: North Carolina Department of Health and Natural Resources
Name: Fin Johnson
Position: Program Manager
Telephone: (919) 733-0824

Notes

Fax: (919) 715-6794

Provider: North Dakota Small Business Assistance Program
Membership: Businesses classified as non-major sources
Businesses with 100 or fewer employees
Independently owned businesses
Internet URL: www.ehs.health.state.nd.us/ndhd/
Affiliations: North Dakota Department of Health
Name: Jeff Burgess
Position: Environmental Engineer
Name: Toll Free Hotline (State)
Telephone: (800) 755-1625
Name: Tom Bachman
Position: Manager of Permitting
Telephone: (701) 328-5188
Fax (701) 328-5200
E-mail: health@pioneer.state.nd.us

Provider: North Dakota Small Business Development Center
Membership: Businesses classified as non-major sources
Businesses with 100 or fewer employees
Independently owned businesses
Affiliations: Association of Small Business Development Centers
U.S. Small Business Administration
Name: Walter Kearns
Position: State Director
Telephone: (701) 777-3700
Fax (701) 777-3225
E-mail: Kearns@prairie.nodak.edu

Provider: Ohio Small Business Assistance Program
Membership: Businesses classified as non-major sources
Businesses with 100 or fewer employees
Independently owned businesses
Internet URL: www.epa.ohio.gov/other/sbao/sbaindex.html
Affiliations: Ohio EPA, Division of Air Pollution
Name: Jim Carney
Position: Program Representative
E-mail: jim.carney@central.epa.ohio.us
Name: Rick Carleski
Position: Program Supervisor
Telephone: (614) 728-1742
Fax (614) 644-3681

Provider: Ohio Small Business Development Center
Membership: Businesses classified as non-major sources
Businesses with 100 or fewer employees
Independently owned businesses
Internet URL: www.soerf.ohiou.edu/~osbdc
Affiliations: Association of Small Business Development Centers
U.S. Small Business Administration
Name: Holly Schick
Position: State Director
Telephone: (614) 466-2711
Fax (961) 466-0829

Notes

E-mail:	hschick@odod.ohio.gov
Name:	Toll Free Hotline (National)
Telephone:	(800) 848-1300
Name:	Toll Free Hotline (State)
Telephone:	(800) 248-4040

Provider:	Oklahoma Small Business Assistance Program
Membership:	Businesses classified as non-major sources Businesses with 100 or fewer employees Independently owned businesses
Internet URL:	www.deq.oklaosf.state.ok.us.SBAPintr.htm
Affiliations:	Oklahoma Department of Environmental Quality
Name:	Adrian Simmons
Position:	Wood Furniture, Emissions
Name:	Alwin Ning
Position:	Electroplating & Printing
Telephone:	(405) 271-1400
Fax	(405) 271-1317
Name:	Judy Duncan
Position:	Director, Customer Services Div.
Name:	Kyle Arthur
Position:	Degreasing, Dry Cleaning, Title V
Name:	Toll Free Hotline (State)
Telephone:	(800) 869-1400

Provider:	Oklahoma Small Business Development Center
Membership:	Businesses classified as non-major sources Businesses with 100 or fewer employees Independently owned businesses
Affiliations:	Association of Small Business Development Centers Southeastern Oklahoma State U.S. Small Business Administration
Name:	Grade Pennington
Position:	State Director
Telephone:	(800) 522-6154
Fax	(405) 920-7471
E-mail:	gpennington@sosu.edu

Provider:	Oregon Small Business Assistance Program
Membership:	Businesses classified as non-major sources Businesses with 100 or fewer employees Independently owned businesses
Internet URL:	www.deq.state.or.us
Affiliations:	Oregon Department of Environmental Quality, Air Quality Division
Name:	Terry Obteshka
Position:	Director
Telephone:	(503) 229-6147
Fax	(503) 229-5675
E-mail:	obteshka.terry@deq.state.or.us
Name:	Toll Free Hotline (State)
Telephone:	(800) 452-4011

Provider:	Oregon Small Business Development Center Network
Membership:	Businesses classified as non-major sources Businesses with 100 or fewer employees

Notes

	Independently owned businesses
Affiliations:	Association of Small Business Development Centers
	Lane Community College
	U.S. Small Business Administration
Name:	Edward (Sandy) Cutler
Position:	State Director
Telephone:	(541) 726-2250
Fax	(541) 345-6006
E-mail:	cutlers@lanecc.edu

Provider:	Pennsylvania Air Help Small Business Assistance Program
Membership:	Businesses classified as non-major sources
	Businesses with 100 or fewer employees
	Independently owned businesses
Internet URL:	www.dep.state.pa.us/dep/deputate/pollprev
Affiliations:	Pennsylvania Department of Environmental Resources, Bureau of Air Quality
Name:	Scott Kepner
Position:	Director
Telephone:	(717) 787-1663
Fax	(717) 772-2303
E-mail:	webmaster@a1.dep.state.pa.us
Name:	Toll Free Hotline (National)
Telephone:	(800) 722-4343

Provider:	Pennsylvania Small Business Development Center
Membership:	Businesses classified as non-major sources
	Businesses with 100 or fewer employees
	Independently owned businesses
Internet URL:	www.libertynet.org/pasbdc
Affiliations:	Association of Small Business Development Centers
	The Wharton School of the University of Pennsylvania
	U.S. Small Business Administration
Name:	Gregory Higgins
Position:	State Director
Telephone:	(215) 898-1219
Fax	(215) 573-2135
E-mail:	ghiggins@wharton.upenn.edu

Provider:	Rhode Island Small Business Assistance Program
Membership:	Businesses classified as non-major sources
	Businesses with 100 or fewer employees
	Independently owned businesses
Affiliations:	Rhode Island Department of Environmental Management
Name:	Pam Annarummo
Position:	Program Supervisor
Name:	Richard Enander
Position:	Technical Assistance Mangager
Telephone:	(401) 277-6822
Fax	(401) 277-3810

Provider:	Rhode Island Small Business Development Center
Membership:	Businesses classified as non-major sources
	Businesses with 100 or fewer employees
	Independently owned businesses
Internet URL:	www.ri-sbdc.com

Notes

Affiliations:	Association of Small Business Development Centers Bryant College U.S. Small Business Administration
Name:	Douglas Jobling
Position:	State Director
Telephone:	(401) 232-6111
Fax	(401) 232-6933

Provider:	South Carolina Small Business Assistance Program
Membership:	Businesses classified as non-major sources Businesses with 100 or fewer employees Independently owned businesses
Internet URL:	www.state.sc.us/dhec/eqchome.htm
Affiliations:	South Carolina Bureau of Air Quality Control
Name:	Chad Pollock
Position:	Technical Assistance
Telephone:	(803) 734-2765
Fax	(803) 734-9196
E-mail:	pollocrc@columb30.dhec.state.sc.us
Name:	Donna Gulledge
Position:	Small Business Ombudsman
Telephone:	(803) 734-6487
Fax	(803) 734-9196
E-mail:	gulleddh@columb30.dhec.state.sc.us
Name:	Toll Free Hotline (National)
Telephone:	(800) 819-9001

Provider:	South Carolina Small Business Development Center
Membership:	Businesses classified as non-major sources Businesses with 100 or fewer employees Independently owned businesses
Internet URL:	sbdcweb.badm.sc.edu
Affiliations:	Association of Small Business Development Centers U.S. Small Business Administration University of South Carolina
Name:	John Lenti
Position:	State Director
Telephone:	(803) 777-4907
Fax	(803) 777-4403
E-mail:	Lenti@darla.badm.sc.edu

Provider:	South Dakota Small Business Assistance Program
Membership:	Businesses classified as non-major sources Businesses with 100 or fewer employees Independently owned businesses
Internet URL:	www.state.sd.us/state/executive/denr
Affiliations:	South Dakota Department of Environmental and Natural Resources
Name:	Bryan Gustafson
Position:	Air Permitting
Telephone:	(605) 773-3351
Fax	(605) 773-6035
E-mail:	joen@denr.state.sd.us

Provider:	South Dakota Small Business Development Center
Membership:	Businesses classified as non-major sources

Notes

	Businesses with 100 or fewer employees
	Independently owned businesses
Affiliations:	Association of Small Business Development Centers
	U.S. Small Business Administration
	University of South Dakota
Name:	Robert Ashley, Jr.
Position:	State Director
Telephone:	(605) 677-5498
Fax	(605) 677-5272
E-mail:	rashley@sundance.usd.edu

Provider:	Tennessee Small Business Assistance Program
Membership:	Businesses classified as non-major sources
	Businesses with 100 or fewer employees
	Independently owned businesses
Internet URL:	www.state.tn.us/environment/permits/handbook
Affiliations:	Tennessee Department of the Environment and Conservation
Name:	Linda Sadler
Position:	Director
Telephone:	(615) 532-0779
Fax	(615) 532-0614
Name:	Toll Free Hotline (National)
Telephone:	(800) 734-3619

Provider:	Tennessee Small Business Development Center
Membership:	Businesses classified as non-major sources
	Businesses with 100 or fewer employees
	Independently owned businesses
Internet URL:	www.tsbdc.memphis.edu
Affiliations:	Association of Small Business Development Centers
	U.S. Small Business Administration
	University of Memphis
Name:	Dr. Kenneth Burns
Position:	State Director
Telephone:	(901) 678-2500
Fax	(901) 678-4072
E-mail:	gmickle@admin1.memphis.edu

Provider:	Texas Small Business Assistance Program
Membership:	Businesses classified as non-major sources
	Businesses with 100 or fewer employees
	Independently owned businesses
Internet URL:	www.tnrcc.state.tx.us/exec/small_business
Affiliations:	Texas Natural Resource Conservation Commission
Name:	Kerry Drake
Position:	Manager, Technical Asst. Prog.
Telephone:	(512) 239-1112
Fax	(512) 239-1055
E-mail:	sbap@tnrcc.state.tx.us
Name:	Toll Free Hotline (National)
Telephone:	(800) 447-2827

Provider:	Texas- Houston Small Business Development Center
Membership:	Businesses classified as non-major sources
	Businesses with 100 or fewer employees

Notes

	Independently owned businesses
Internet URL:	SmBizSolutions.uh.edu
Affiliations:	Association of Small Business Development Centers U.S. Small Business Administration University of Houston
Name:	Mike Young
Position:	Regional Director
Telephone:	(713) 752-8444
Fax	(713) 756-1500
E-mail:	MYoung@UH.EDU

Provider:	Texas- North Texas Small Business Development Center
Membership:	Businesses classified as non-major sources Businesses with 100 or fewer employees Independently owned businesses
Internet URL:	www.dcccd.edu/bjp/sbdc.htm
Affiliations:	Association of Small Business Development Centers Dallas County Community College U.S. Small Business Administration
Name:	Elizabeth Klimback
Position:	Regional Director
Telephone:	(214) 860-5835
Fax	(214) 860-5813
E-mail:	emk9402@dcccd.edu

Provider:	Texas- Northwest Texas Small Business Development Center
Membership:	Businesses classified as non-major sources Businesses with 100 or fewer employees Independently owned businesses
Internet URL:	nwtsbdc.ttu.edu
Affiliations:	Association of Small Business Development Centers Texas Tech University U.S. Small Business Administration
Name:	Craig Bean
Position:	Regional Director
Telephone:	(806) 745-3973
Fax	(806) 745-6207
E-mail:	odaus@ttacs.ttu.edu

Provider:	Texas- South Texas Border Small Business Development Center
Membership:	Businesses classified as non-major sources Businesses with 100 or fewer employees Independently owned businesses
Internet URL:	www.lot49.Tristero.Com/sa/sbdc
Affiliations:	Association of Small Business Development Centers U.S. Small Business Administration
Name:	Robert McKinley
Position:	Regional Director
Telephone:	(210) 458-2450
Fax	(210) 458-2464
E-mail:	rmckinle@utsadt.utsa.edu

Provider:	Utah Small Business Assistance Program
Membership:	Businesses classified as non-major sources Businesses with 100 or fewer employees

Notes

	Independently owned businesses
Internet URL:	www.deq.state.ut.us
Affiliations:	Utah Department of Environmental Quality, Division of Air Quality
Name:	Frances Bernards
Position:	Program Manager
Telephone:	(801) 536-4056
Fax	(801) 536-4099
E-mail:	fbernard@deq.state.ut.us
Name:	Toll Free Hotline
Telephone:	(800) 270-4440

Provider:	Utah Small Business Development Center
Membership:	Businesses classified as non-major sources
	Businesses with 100 or fewer employees
	Independently owned businesses
Internet URL:	www.slcc.edu/utahsbdc
Affiliations:	Association of Small Business Development Centers
	Salt Lake Community College
	U.S. Small Business Administration
Name:	Mike Finnerty
Position:	State Director
Telephone:	(801) 957-3480
Fax	(801) 957-3489
E-mail:	finnermi@slcc.edu

Provider:	Vermont Small Business Compliance Assistance Program
Membership:	Businesses classified as non-major sources
	Businesses with 100 or fewer employees
	Independently owned businesses
Affiliations:	Vermont Agency of Natural Resources
Name:	Judy Mirro
Position:	Director
Telephone:	(802) 241-3745
Fax	(802) 241-3273
E-mail:	judym@waste.man.anr.state.vt.us

Provider:	Vermont Small Business Development Center
Membership:	Businesses classified as non-major sources
	Businesses with 100 or fewer employees
	Independently owned businesses
Affiliations:	Association of Small Business Development Centers
	U.S. Small Business Administration
Name:	Donald Kelpinski
Position:	State Director
Telephone:	(802) 728-9101
Fax	(802) 728-3026
E-mail:	dkelpins@night.vtc.vsc.edu
Name:	Peter Crawford
Position:	Dir., Environmental Asst. Prog.
E-mail:	pcrawfor@vtc.vsc.edu

Provider:	Virginia Small Business Development Center
Membership:	Businesses classified as non-major sources
	Businesses with 100 or fewer employees

Notes

	Independently owned businesses
Internet URL:	www.dba.state.virginia.us
Affiliations:	Association of Small Business Development Centers
	U.S. Small Business Administration
Name:	Robert Wilburn
Position:	State Director
Telephone:	(804) 371-8253
Fax	(804) 225-3384
E-mail:	rwilburn@dba.state.va.us

Provider:	Virginia Small Business Policy and Technical Assistance Program
Membership:	Businesses classified as non-major sources
	Businesses with 100 or fewer employees
	Independently owned businesses
Internet URL:	www.deq.state.va.us/osba/smallbiz.html
Affiliations:	Virginia Department of Environmental Quality
Name:	Richard Rasmussen
Position:	Manager
Telephone:	(804) 698-4394
Fax	(804) 698-4510
E-mail:	rgrasmusse@deq.state.va.us
Name:	Toll Free Hotline (State)
Telephone:	(800) 592-5482

Provider:	Washington Small Business Assistance Program
Membership:	Businesses classified as non-major sources
	Businesses with 100 or fewer employees
	Independently owned businesses
Affiliations:	Washington Department of Ecology
Name:	Leighton Pratt
Position:	Small Business Ombudsman
Telephone:	(360) 407-7018
Fax	(360) 407-6802

Provider:	Washington Small Business Development Center
Membership:	Businesses classified as non-major sources
	Businesses with 100 or fewer employees
	Independently owned businesses
Internet URL:	www.sbdc.wsu.edu
Affiliations:	Association of Small Business Development Centers
	U.S. Small Business Administration
	Washington State University
Name:	Carol Riesenberg
Position:	State Director
Telephone:	(509) 335-1576
Fax	(509) 335-0949
E-mail:	riesenbe|@wsu.edu

Provider:	West Virginia Small Business Assistance Program
Membership:	Businesses classified as non-major sources
	Businesses with 100 or fewer employees
	Independently owned businesses
Affiliations:	West Virginia Office of Air Quality
Name:	Fred Durham
Position:	Director

Notes

Telephone: (304) 558-1217
Fax (304) 558-1222
E-mail: durhaf@mail.wvnet.edu
Name: Toll Free Hotline (State)
Telephone: (800) 982-2474

Provider: West Virginia Small Business Development Center
Membership: Businesses classified as non-major sources
Businesses with 100 or fewer employees
Independently owned businesses
Internet URL: www.wvdo.org/sbdc
Affiliations: Association of Small Business Development Centers
U.S. Small Business Administration
Name: Hazel Kroesser-Palmer
Position: State Director
Telephone: (304) 558-2960
Fax (304) 558-0127
E-mail: palmeh@mail.wvnet.edu

Provider: Wisconsin Clean Air Assistance Program
Membership: Businesses classified as non-major sources
Businesses with 100 or fewer employees
Independently owned businesses
Internet URL: badger.state.wi.us/agencies/commerce
Affiliations: U.S. Small Business Administration
University of Wisconsin
Wisconsin Department of Commerce
Name: Cliff Fleener
Position: Clean Air Specialist
E-mail: cfleener@mail.state.wi.us
Name: Pam Christenson
Position: Technical Assistance Director
Telephone: (608) 267-9214
Fax (608) 267-0436
E-mail: pchriste@mail.state.wi.us

Provider: Wisconsin Small Business Development Center
Membership: Businesses classified as non-major sources
Businesses with 100 or fewer employees
Independently owned businesses
Affiliations: Association of Small Business Development Centers
U.S. Small Business Administration
Name: Erica McIntire
Position: State Director
Telephone: (608) 263-7794
Fax (608) 263-7830
E-mail: mcintire@admin.uwex.edu

Notes

Provider:	Wyoming Small Business Assistance Program
Membership:	Businesses classified as non-major sources Businesses with 100 or fewer employees Independently owned businesses
Internet URL:	www.deq.state.wy.us/ms/outweb.htm
Affiliations:	Wyoming Department of Environmental Quality, Division of Air Quality
Name:	Charles Raffelson
Position:	Program Coordinator
Telephone:	(307) 777-7391
Fax	(307) 777-5616
E-mail:	dclark@missc.state.wy.us

Provider:	Wyoming Small Business Development Center
Membership:	Businesses classified as non-major sources Businesses with 100 or fewer employees Independently owned businesses
Affiliations:	Association of Small Business Development Centers U.S. Small Business Administration
Name:	Diane Wolverton
Position:	State Director
Telephone:	(307) 766-3505
Fax	(307) 766-3406

NON-PROFIT - NATIONAL

Provider:	Center for Emissions Control
Membership:	Chlorinated solvent producers
Internet URL:	www.cec-dc.org
Affiliations:	Chlorine Institute
Name:	Stephen Risotto
Position:	Executive Director
Telephone:	(202) 785-4374
Fax	(202) 833-0381
E-mail:	srisotto@cec-dc.org

Provider:	Research Triangle Institute
Membership:	Researchers
Internet URL:	www.rti.org/gen_info.html
Affiliations:	Duke University North Carolina State University University of North Carolina at Chapel Hill
Name:	Jesse Baskir, Ph.D.
Position:	Director
Telephone:	(919) 541-5882
Fax	(919) 541-7155
E-mail:	jbaskir@rti.org

NON-PROFIT - STATE

Provider:	Louisiana Chemical Association
Membership:	Chemical distributors Chemical manufacturers Chemical marketers
Internet URL:	www.ldol.state.la.us/career/r1/lca_memb.htm
Affiliations:	Chemical Manufacturers Association

Notes

	Federation of State Chemical Associations
	Louisiana Chemical Industry Association
Name:	Dan Borne
Position:	President
Telephone:	(504) 344-2609
Fax	(504) 344-1007
Name:	Henry T. Graham, Jr.
Position:	Director, Environ. & Legal Affairs

Provider:	Louisiana Chemical Industry Alliance
Membership:	Chemical distributors
	Chemical manufacturers
	Chemical marketers
	Chemical recyclers
	Contractors
	Raw materials suppliers
	Vendors
Affiliations:	Louisiana Chemical Association
Name:	Dan Borne
Position:	President
Telephone:	(504) 344-2609
Fax	(504) 344-1007
E-mail:	dan@lca.org
Name:	Phillip Bowen
Position:	Vice President
E-mail:	phillip@lca.org

Provider:	Minnesota Chemical Technology Alliance
Membership:	Chemical distributors
	Chemical engineers
	Chemical manufacturers
	Chemical marketers
	Chemical recyclers
Affiliations:	Chemical Manufacturers Association
	Federation of State Chemical Associations
Name:	Joel Carlson
Position:	Director
Telephone:	(612) 926-5428
Fax	(612) 332-2089

Provider:	Plastics Processors Association of Ohio
Membership:	Plastics processors
	Rubber product manufacturers
Internet URL:	www.polysort.com
Affiliations:	Society of the Plastics Industry, Inc.
Name:	Chris Chrisman
Position:	Executive Director
Telephone:	(800) 326-8666
Fax	(330) 665-5152
E-mail:	ppaohio@polysort.com

Notes

PRIVATE COMPANY - INTERNATIONAL

Provider: Alliance for Responsible Atmospheric Policy
Membership: CFCs, HCFCs & HFCs prod. Mfg.
Producers of CFCs, HCFCs, and HFCs
Name: David Stirpe
Position: Legislative Council
Telephone: (703) 243-0344
Fax (703) 243-2874

PROFESSIONAL ASSOCIATION - INTERNATIONAL

Provider: American Association of Textile Chemists and Colorists
Membership: Textile chemists
Textile colorists
Internet URL: www.aatcc.org
Name: Jerry Tew
Position: Technical Director
Telephone: (919) 549-8141
Fax (919) 549-8933

Provider: American Oil Chemists Society
Membership: Fats, oils, & related materials chemists
Fats, oils, & related materials manufacturers
Internet URL: www.aocs.org
Name: James C. Lyon
Position: Executive Director
Telephone: (217) 359-2344
Fax (217) 351-8091
E-mail: general@aocs.org

Provider: Center for Waste Reduction Technologies
Membership: Chemical manufacturers
Contractors
Downstream manufacturing industries
Petroleum products manufacturers
Pharmaceutical manufacturers
Raw materials suppliers
Internet URL: 198.6.4.175/docs/cwrt.index.htm
Affiliations: American Institute of Chemical Engineers
Name: Jack Weaver
Position: Director
Telephone: (212) 705-7424
Fax (212) 838-8274
E-mail: cwrt@aiche.org

Provider: Electrochemcial Society
Membership: Electrochemical engineers
Electrochemical facilities
Electrochemical scientists
Internet URL: www.electrochem.org
Affiliations: American Association for the Advancement of Science
Chemical Heritage Foundation
Federation of Materials Sciences
Name: V.H. Brannecky

Notes

Position: Executive Secretary
Telephone: (609) 737-1902
Fax (609) 737-2743
E-mail: ecs@electrochem.org

Provider: Technical Association of the Pulp and Paper Industry
Membership: Pulp and paper industry professionals
Pulp and paper manufacturers
Pulp and paper processors
Pulp-derived chemical products manufacturers
Internet URL: www.tappi.org
Affiliations: American Forest and Paper Association
National Council for Air and Stream Improvement
Paper Industry Management Association
Name: Wayne Gross
Position: Executive Director
Telephone: (770) 209-7233
Fax (770) 446-6947

PROFESSIONAL ASSOCIATION - NATIONAL

Provider: American Chemical Society
Membership: Chemical engineers
Chemists
Internet URL: www.acs.org
Name: John K. Crum
Position: Executive Director
Telephone: (202) 872-8724
Fax (202) 872-6206

Provider: American Institute of Chemical Engineers
Membership: Chemical engineers
Internet URL: www.aiche.org
Affiliations: Center for Chemical Process Safety
Center for Waste Reduction Technologies
Design Institute for Emergency Relief Systems
Design Institute for Physical Property Data
Name: Sean Devlin Bersell
Position: Director, Government Relations
Telephone: (202) 962-8690
Fax (202) 962-8699

Provider: Federation of Societies for Coatings Technology
Membership: Chemical coatings manufacturers
Chemical coatings users
Internet URL: www.coatingstech.org
Affiliations: National Paint and Coatings Association
Name: Robert F. Ziegler
Position: Executive Vice President
Telephone: (610) 940-0777
Fax (610) 940-0292

Provider: Society of Cosmetic Chemists
Membership: Chemists
Name: Theresa Cesario

Notes

Position:	Business Administrator
Telephone:	(212) 668-1500
Fax	(212) 668-1504
E-mail:	societycoschem@worldnet.att.net

PROFESSIONAL ASSOCIATION - STATE

Provider:	Alabama Chemical Association
Membership:	Chemical distributors Chemical manufacturers Chemical marketers
Affiliations:	Chemical Manufacturers Association Federation of State Chemical Associations
Name:	Kelli Heartsill
Position:	Executive Director
Telephone:	(334) 265-2154
Fax	(334) 834-6398

TRADE ASSOCIATION - INTERNATIONAL

Provider:	Adhesives and Sealants Council
Membership:	Adhesives manufacturers Consultants Equipment manufacturers Sealant manufacturers
Internet URL:	www.ascouncil.org
Name:	Mark Collatz
Position:	Director of Government Relations
Telephone:	(202) 452-1500
Fax	(202) 452-1501

Provider:	Chlorine Institute
Membership:	Chlor-alkali chemical distributors Chlor-alkali chemicals manufacturers Chlor-alkali chemicals marketers
Internet URL:	www.cl2.com
Affiliations:	Center for Emissions Control Chemical Manufacturers Association Halogenated Solvents Industry Alliance
Name:	Arthur Duncan
Position:	VP Health, Safety, & Environment
Name:	Dr. Robert Smerko
Position:	President
Telephone:	(202) 775-2790
Fax	(202) 223-7225

Provider:	International Institute of Synthetic Rubber Products
Membership:	Synthetic Rubber Producers
Name:	R.J. Killian
Position:	Managing Director
Telephone:	(713) 783-7511
Fax	(713) 783-7253
E-mail:	iisrp@attmail.com

Notes

Provider: Pulp Chemicals Association
Membership: Pulp-derived chemical product manufacturers
Name: Jennie Lazarus
Position: PCA Coordinator
Telephone: (770) 209-7237
E-mail: jlazarus@tappi.org
Name: Matthew Coleman
Position: Executive Director
Telephone: (770) 446-1290
Fax (770) 446-1487

Provider: Suppliers of Advanced Composite Materials Association
Membership: Advanced composite materials suppliers
Affiliations: Suppliers of Advanced Materials Processing Engineers
Name: Lynne Justice
Position: Director of Administration
Telephone: (703) 841-1556
Fax (703) 812-8743
E-mail: iaistaff@worldnet.att.net

TRADE ASSOCIATION - NATIONAL

Provider: Adhesives Manufacturers Association
Membership: Adhesives manufacturers
Raw materials suppliers
Internet URL: www.adhesive.org/ama
Name: Frank Moore
Position: Director, Government Relations
Telephone: (202) 857-1127
Fax (202) 857-1115

Provider: Alliance of Chemical Industries of New York State, Inc.
Membership: Chemical manufacturers
Service providers to the Chemical Industry
Affiliations: Chemical Manufacturers Association
Federation of State Chemical Associations
Name: Diana Hinchcliff
Position: Executive Director
Telephone: (518) 427-7861
Fax (518) 427-7008

Provider: American Crop Protection Association
Membership: Agricultural crop protection distributors
Agricultural crop protection formulators
Agricultural crop protection manufacturers
Pest control product distributors
Pest control product formulators
Pest control product manufacturers
Internet URL: www.acpa.org
Name: Ray McAllister
Position: Director, Regulatory Affairs
Telephone: (202) 296-1585
Fax (202) 463-0474

Notes

Provider: American Fiber Manufacturers Association
Membership: Fibers, filaments, and yarns manufacturers
Internet URL: www.fibersource.com (under construction)
Affiliations: Fiber Economics Bureau
Name: Dr. Robert Barker
Position: Vice President
Telephone: (202) 296-6508
Fax (202) 296-3052
E-mail: inks@afma.org
Name: Jeff Inks

Provider: American Petroleum Institute
Membership: Petroleum product manufacturers
Petroleum products users
Internet URL: www.api.org
Name: Joe Lastelic
Position: Senior Media Relations Rep
Telephone: (202) 682-8000
Fax (202) 682-8096
E-mail: pr@api.org

Provider: Biotechnology Industry Organization
Membership: Biotechnology companies
State biotechnology centers
Internet URL: www.bio.org
Affiliations: Arkansas Biotechnology Association and Biomedical Technology Center
Bay Area Bioscience Center
BIO+Florida
BIOCOM/San Diego
Biotechnology Association of Maine
Biotechnology Council of New Jersey
California Healthcare Institute
Colorado Biotechnology Association
Connecticut United For Research Excellence
Edison Biotechnology Center
Georgia Biomedical Partnership
Illinois Alliance for Biotechnology
Iowa Biotechnology Association
Los Alamos National Lab
Maryland Bioscience Alliance
Massachusetts Biotechnology Council
Michigan Biotechnology Association
Minnesota Biotechnology Association
New York Biotechnology Association
North Carolina Bioscience Organization
Oregon Bioscience Association
Pennsylvania Biotechnology Association
South Dakota Biotechnology Association
Texas Healthcare and Bioscience Institute
Utah Life Science Industries Association
Virginia Biotechnology Association
Washington Biotechnology & Biomedical Association
Wisconsin Biotechnology Association
Name: Richard G. Godown
Position: President
Telephone: (202) 857-0244

Notes

Fax	(202) 857-0237
E-mail:	info@bio.org

Provider:	Chemical Coaters Association International
Membership:	Chemical coatings manufacturers Chemical coatings users
Internet URL:	www.finishing.com/CCAI/index.html
Name:	Anne Goyer
Position:	Executive Director
Telephone:	(513) 624-6767
Fax	(513) 624-0601
E-mail:	aygoyer@mci2000.com

Provider:	Chemical Industry Council of Maryland
Membership:	Chemical distributors Chemical manufacturers Chemical marketers Chemical recyclers
Affiliations:	Chemical Manufacturers Association Federation of State Chemical Associations
Name:	Roy Vaillant
Position:	Managing Director
Telephone:	(410) 974-4071
Fax	(410) 974-4071

Provider:	Chemical Manufacturers Association
Membership:	Chemical manufacturers
Internet URL:	www.cmahq.com
Affiliations:	Alabama Chemical Association Alliance of Chemical Industries of New York State, Inc. Association of Water Technologies Chemical Council of Missouri Chemical Industry Committee, Tennessee Association of Business Chemical Industry Committee, WV Manufacturers Association Chemical Industry Council of Associated Industries of Kentucky Chemical Industry Council of California Chemical Industry Council of Delaware Chemical Industry Council of Illinois Chemical Industry Council of Maryland Chemical Industry Council of New Jersey Chlorine Institute, The Compressed Gas Association, Inc. East Harris County Manufacturers Association Federation of State Chemical Associations Florida Chemical Industry Council Louisiana Chemical Association Manufacturers and Chemical Industry Council of North Carolina Massachusetts Chemical Technology Alliance Michigan Chemical Council Minnesota Chemical Technology Alliance Ohio Chemical Council Pennsylvania Chemical Industry Council Plus most of the Federation of State Chemical Associations Responsible Care Partnership Program Partner Associations Synthetic Organic Chemical Manufacturers Association

Notes

	Texas Chemical Council
	Vinyl Institute
Name:	Joe Mayhew
Position:	Asst. VP, Environment & Policy
Telephone:	(703) 741-5000
Fax	(703) 741-6000

Provider:	Chemical Producers and Distributors Association
Membership:	Chemical distributors
	Chemical manufacturers
Name:	Warren Stickle
Position:	President
Telephone:	(703) 548-7700
Fax	(703) 548-3149
E-mail:	cpda@ix.netcom.com

Provider:	Chemical Specialties Manufacturers Association
Membership:	Chemical manufacturers
Internet URL:	www.csma.org
Name:	Philip Klein
Position:	Director, Fed. Legislative Affairs
Telephone:	(202) 872-8110
Fax	(202) 872-8114
E-mail:	csma@juno.com

Provider:	Chlorine Chemistry Council
Membership:	Chlorine producers
Internet URL:	www.c3.org
Affiliations:	Chemical Manufacturers Association
Name:	Clifford Howlett
Position:	Executive Director
Telephone:	(703) 741-5000
Fax	(703) 741-6084
E-mail:	info@c3.org

Provider:	Color Pigments Manufacturers Association, Inc.
Membership:	Color pigment manufacturers
Name:	Doug Nelson
Position:	Research and Regulatory Affairs
Telephone:	(703) 684-4044
Fax	(703) 684-1795

Provider:	Composite Fabricators Association
Membership:	Composite distributors
	Composite manufacturers
	Composite suppliers
	Composite users
	Consultants
	Educators
	Retirees
Internet URL:	www.cfa-hq.org
Name:	Robert Lacovara
Position:	Director, Technical Services
Name:	Steve McNally
Position:	Director, Government Affairs

Notes

Telephone: (703) 525-0511
Fax (703) 525-0515
E-mail: cfa@cfa-hq.org

Provider: Cosmetic, Toiletry, and Fragrance Association
Membership: Personal care product distributors
Personal care product manufacturers
Raw materials suppliers
Internet URL: www.ctfa.org
Affiliations: Cosmetic Ingredient Review
Name: Joyce Graff
Position: Manager, Environmental Affairs
Telephone: (202) 331-1770
Fax (202) 331-1969

Provider: Fertilizer Institute
Membership: Consultants
Fertilizer distributors
Fertilizer manufacturers
Raw materials suppliers
Name: Jim Skillen
Position: Dir., Envir. & Energy Programs
Telephone: (202) 675-8250
Fax (202) 544-8123

Provider: Fire Retardant Chemical Association
Membership: Fire retardant materials producers
Fire retardant materials users
Name: Russel C. Kidder
Position: Executive Vice President
Telephone: (717) 291-5616
Fax (717) 295-9637

Provider: Foodservice and Packaging Institute, Inc.
Membership: Disposable foodservice product distributors
Disposable foodservice products manufacturers.
Equipment manufacturers
Raw materials suppliers
Internet URL: www.fpi.org
Name: Ann Mattheis
Position: Director, Public Affairs
Name: Richard B. Norment
Position: President
Telephone: (703) 527-7505
Fax (703) 527-7512
E-mail: fooserv@crosslink.net

Provider: International Fabricare Institute
Membership: Dry Cleaners
Launderers
Internet URL: www.ifi.org
Name: Jim Patrie
Position: President
Telephone: (301) 622-1900
Fax (301) 236-9320

Notes

E-mail:	communications@ifi.org
Name:	Toll Free Hotline (National)
Telephone:	(800) 638-2627

Provider:	International Slurry Surfacing Association
Membership:	Asphalt slurry seal companies
	Professionals involved in asphalt slurry seal
Internet URL:	www.history.rochester.edu/issa
Affiliations:	Foundation for Pavement Rehabilitation and Maintenance Research
Name:	John Fiegel
Position:	Executive Officer
Telephone:	(202) 857-1160
Fax	(202) 857-1111
E-mail:	issa@spa.com

Provider:	Metal Finishing Suppliers Association
Membership:	Metal finishing materials suppliers
Internet URL:	www.metal-finishing.com/mfsa.htm
Name:	Dr. Rebecca Spearot
Position:	Environmental Affairs Chair
Name:	Ken Hankinso
Position:	Environmental Affairs Vice Chair
Name:	Richard W. Crain
Position:	Executive Director
Telephone:	(630) 887-0797
Fax	(630) 887-0799

Provider:	National Association of Chemical Distributors
Membership:	Chemical distributors
Internet URL:	www.nacd.com
Affiliations:	National Association of Chemical Distributors Education Foundation
Name:	Geoffrey O'Hara
Position:	Director, Government Affairs
Name:	William Allmond
Position:	Director, Regulatory Affairs
Telephone:	(703) 527-6223
Fax	(703) 527-7747

Provider:	National Association of Chemical Distributors Education Foundation
Membership:	Chemical distributors
	Chemical manufacturers
	Chemical marketers
	Chemical recyclers
	Chemical users
Internet URL:	www.nacd.com/NACDEF
Affiliations:	National Association of Chemical Distributors
Name:	Lisa Capone
Position:	Program Manager
Telephone:	(703) 527-6223
Fax	(703) 527-7747

Provider:	National Association of Chemical Recyclers
Membership:	Chemical recyclers
Internet URL:	www.bismarck.com/nacr/nacr.html
Affiliations:	Cement Kiln Recycling Coalition

Notes

Name: H. Peter Nerger
Position: President
Telephone: (202) 296-1725
Fax (202) 296-2530
E-mail: 103612,514@compuserve.com

Provider: National Association of Printing Ink Manufacturers, Inc.
Membership: Printing ink manufacturers
Internet URL: www.napim.org/napim
Affiliations: National Printing Ink Research Institute
Name: George Fuchs
Position: Environmental Manager
Telephone: (201) 288-9454
Fax (201) 288-9453
E-mail: napim@napim.org

Provider: National Paint and Coatings Association
Membership: Chemical coatings manufacturers
Chemical coatings users
Paint distributors
Paint manufacturers
Paint users
Raw materials suppliers
Internet URL: www.paint.org
Name: J. Andrew Doyle
Position: Executive Director
Telephone: (202) 462-6272
Fax (202) 462-8549
E-mail: npca@paint.org
Name: Sonya McDavid
Position: Asst. Dir. Environmental Affairs
Name: Stephen R. Sides
Position: Director, Health, Safety, & Env.

Provider: National Pest Control Association
Membership: Pesticides applicators
Internet URL: www.pestworld.com
Name: Bob Rosenberg
Position: Director of Government Affairs
E-mail: Bob_Rosenberg@msn.com
Name: Gene Harrington
Position: Manager of Government Affairs
E-mail: Harrington@pestworld.org
Name: Rob Lederee
Position: CEO & Executive Vice President
Telephone: (703) 573-8330
Fax (703) 573-4116
E-mail: Lederer@pestworld.org

Provider: Pharmaceutical Research and Manufacturers of America
Membership: Research-based pharmaceutical operations
Internet URL: www.phrma.org
Affiliations: Pharmaceutical Research and Manufacturers of America Foundation
Name: Thomas White
Position: Associate Vice President

Notes

Telephone:	(202) 835-3546
Fax	(202) 835-3597

Provider:	Polyisocyanurate Insulation Manufacturers Association
Membership:	Polyiso insulation manufacturers Raw materials suppliers
Name:	Rebecca Loyd
Position:	Secretary
Telephone:	(202) 624-2709
Fax	(202) 628-3856
E-mail:	pima@buildernet.com

Provider:	Powder Coatings Institute
Membership:	Powder coating equipment suppliers Powder coating facilities Powder coating materials manufacturers Powder coating materials marketers Resin manufacturers
Internet URL:	www.powdercoating.org
Name:	Greg Bocchi
Position:	Executive Director
Telephone:	(703) 684-1770
Fax	(703) 684-1771
E-mail:	pci-info@powdercoating.org

Provider:	Rubber Manufacturers Association
Membership:	Rubber product manufacturers Tire manufacturers
Internet URL:	www.rma.org
Affiliations:	Scrap Tire Management Council Tire Industry Safety Council
Name:	Kristen Udowitz
Position:	Communications and Marketing
Telephone:	(202) 682-4800
Fax	(202) 783-3512
E-mail:	kristen@tmn.com

Provider:	Society of the Plastics Industry, Inc.
Membership:	Plastics mold makers Plastics processors Raw materials suppliers
Internet URL:	www.socplas.org
Name:	Pat Toner
Position:	Technical Vice President
Telephone:	(202) 974-5200
Fax	(202) 296-7005
E-mail:	feedback@socplas.org
Name:	Tom Southall
Position:	Information Manager

Provider:	Synthetic Organic Chemical Manufacturers Association
Membership:	Chemical distributors Chemical manufacturers Chemical marketers Service providers to the Chemical Industry

Notes

Internet URL: www.socma.com
Name: Cheryl O. Morton
Position: Director, Technical Affairs
Name: Graydon Powers
Position: President
Name: Mary J. Legatski
Position: Director, Government Relations
Name: Robert Grasso
Position: Vice President of Govt Affairs
Telephone: (202) 296-8577
Fax (202) 296-8120
Name: Sherry L. Edwards
Position: Director, Public Policy

Provider: Vinyl Institute
Membership: Vinyl additives & modifiers manufacturers
Vinyl chloride monomer manufacturers
Vinyl manufacturers
Vinyl packaging manufacturers
Internet URL: www.vinylinfo.org
Affiliations: Society of the Plastics Industry, Inc.
Vinyl Environmental Resource Center
Name: Robert H. Burnett
Position: Executive Director
Telephone: (973) 898-6699
Fax (973) 898-6633
E-mail: vi@socplas.org

TRADE ASSOCIATION - STATE

Provider: Chemical Council of Missouri
Membership: Chemical distributors
Chemical manufacturers
Chemical marketers
Chemical recyclers
Affiliations: Chemical Manufacturers Association
Federation of State Chemical Associations
Name: Sandra Bennett
Position: Executive Administrator
Telephone: (573) 636-2822
Fax (573) 636-8749

Provider: Chemical Industry Committee, Tennessee Association of Business
Membership: Chemical distributors
Chemical manufacturers
Chemical marketers
Chemical recyclers
Internet URL: www.tennbiz.org
Affiliations: Chemical Manufacturers Association
Federation of State Chemical Associations
Name: Dave Goetz
Position: Executive Director, CIC
Telephone: (615) 256-5141

Fax (615) 256-6726

Notes

E-mail:	info@tennbiz.org

Provider:	Chemical Industry Committee, WV Manufacturers Association
Membership:	Chemical distributors Chemical manufacturers Chemical marketers Chemical recyclers
Affiliations:	Chemical Manufacturers Association Federation of State Chemical Associations
Name:	Karen Price
Position:	President
Telephone:	(304) 342-2123
Fax	(304) 342-4552
E-mail:	wvma@citynet.net

Provider:	Chemical Industry Council of Associated Industries of Kentucky
Membership:	Chemical distributors Chemical manufacturers Chemical marketers Chemical recyclers
Internet URL:	www.aik.org
Affiliations:	Associated Industries of Kentucky Chemical Manufacturers Association Federation of State Chemical Associations
Name:	John Nickols
Position:	Executive Vice President
Telephone:	(502) 491-4737
Fax	(502) 491-5322

Provider:	Chemical Industry Council of California
Membership:	Chemical distributors Chemical manufacturers Chemical marketers Chemical recyclers
Affiliations:	Chemical Manufacturers Association Federation of State Chemical Associations
Name:	Paul Kronenberg
Position:	Executive Director
Telephone:	(916) 442-1420
Fax	(916) 442-3387

Provider:	Chemical Industry Council of Delaware
Membership:	Chemical distributors Chemical manufacturers Chemical marketers Chemical recyclers
Affiliations:	Chemical Manufacturers Association Federation of State Chemical Associations
Name:	William Wood
Position:	Executive Director
Telephone:	(302) 655-2673
Fax	(302) 655-2673

Provider:	Chemical Industry Council of Illinois

Notes

Membership:	Chemical distributors Chemical manufacturers Chemical marketers Chemical recyclers
Affiliations:	Chemical Manufacturers Association Federation of State Chemical Associations
Name:	Jack Toslosky
Position:	Executive Director
Telephone:	(847) 823-4020
Fax	(847) 823-4033

Provider:	Chemical Industry Council of New Jersey
Membership:	Chemical distributors Chemical manufacturers Chemical marketers Chemical recyclers
Internet URL:	www.cicnj.org
Affiliations:	Chemical Manufacturers Association Federation of State Chemical Associations
Name:	Hal Bozarth
Position:	Executive Director
Telephone:	(609) 392-4214
Fax	(609) 392-4816

Provider:	Chemical Industry Council of North Carolina
Membership:	Chemical distributors Chemical manufacturers Chemical marketers Chemical recyclers
Affiliations:	Chemical Manufacturers Association Federation of State Chemical Associations
Name:	George Everett
Position:	Executive Director
Telephone:	(919) 834-9459
Fax	(919) 833-1926
E-mail:	gtenccic@aol.com

Provider:	Florida Manufacturing and Chemical Council
Membership:	Chemical distributors Chemical manufacturers
Internet URL:	www.fmcc.org
Affiliations:	Chemical Manufacturers Association Federation of State Chemical Associations
Name:	Nancy D. Stephens
Position:	Executive Director
Telephone:	(904) 224-8141
Fax	(904) 224-5283
E-mail:	fmcc@internetmci.com

Provider:	Massachusetts Chemical Technology Alliance
Membership:	Chemical distributors Chemical engineering firms Chemical manufacturers Chemical marketers Chemical recyclers

Notes

	Chemical users
Affiliations:	Chemical Manufacturers Association
	Federation of State Chemical Associations
Name:	Michael DeVito
Position:	Executive Director
Telephone:	(617) 451-6282
Fax	(617) 695-9568

Provider:	Michigan Chemical Council
Membership:	Chemical distributors
	Chemical manufacturers
	Chemical marketers
Affiliations:	Chemical Manufacturers Association
	Federation of State Chemical Associations
Name:	Andrew Such
Position:	Executive Director
Telephone:	(517) 372-8898
Fax	(517) 372-9020

Provider:	Ohio Chemical Council
Membership:	Chemical distributors
	Chemical manufacturers
	Chemical marketers
	Chemical recyclers
Internet URL:	www.ohiochem.org
Affiliations:	Chemical Manufacturers Association
Name:	Peggy Smith
Position:	Secretary/Executive Director
Telephone:	(614) 224-1730
Fax	(614) 224-5168
E-mail:	ohchem@infinet.com

Provider:	Pennsylvania Chemical Industry Council
Membership:	Chemical engineers
	Chemical manufacturers
	Chemical marketers
	Chemical recyclers
Internet URL:	www.pcic.org/home.html
Affiliations:	Chemical Manufacturers Association
	Federation of State Chemical Associations
Name:	David W. Patti
Position:	Executive Director
Telephone:	(717) 232-6681
Fax	(717) 232-4684
E-mail:	info@pcic.org
Name:	Juli Conrad
Position:	Staff Assistant, Govt. Affairs
Name:	Matthew Tunnell
Position:	Government Affairs Coordinator

Provider:	Texas Chemical Council
Membership:	Chemical distributors
	Chemical manufacturers
	Chemical marketers

Notes

	Chemical recyclers
Internet URL:	www.txchemcouncil.org
Affiliations:	Chemical Manufacturers Association
	Federation of State Chemical Associations
Name:	Jim Woodrick
Position:	President
Telephone:	(512) 477-4465
Fax	(512) 477-5387
E-mail:	kncard@mail.eden.com

UNIVERSITY - NATIONAL

Provider:	Center for Clean Products and Clean Technologies at the University of Tennessee
Membership:	Academic researchers
Internet URL:	www.ra.utk.edu/eerc/clean2.html
Affiliations:	University of Tennesee - Knoxville
	University of Tennessee Energy, Environment, and Resources Center
Name:	Gary A. Davis
Position:	Director
Telephone:	(423) 974-4251
Fax	(423) 974-1838
E-mail:	davisg@eerc.gw.utk.edu

Provider:	Center for Clean Technology at UCLA
Membership:	Academic researchers
Internet URL:	www.cct.seas.ucla.edu
Affiliations:	University of California- Los Angeles
Name:	Dr. Selim Senkan
Position:	Director
Telephone:	(310) 206-3071
E-mail:	cct@seas.ucla.edu

Provider:	Hazardous Substance Research Center South & Southwest
Membership:	Academic researchers
Internet URL:	www.eng.lsu.edu/center/hsrc.html
Affiliations:	Georgia Institute of Technology
	Louisiana State University
	Rice University
	U.S. Environmental Protection Agency
Name:	Danny D. Reible
Position:	Director
Telephone:	(504) 388-6770
Fax	(504) 388-5043
E-mail:	cmreib@lsuvm.sncc.lsu.edu

Provider:	Indiana Pollution Prevention and Safe Materials Institute
Membership:	Academic researchers
Internet URL:	www.ecn.purdue.edu/IPPI/
Affiliations:	Purdue University
Name:	Lynn A. Corson Ph.D.
Position:	Director
Telephone:	(317) 494-6450
Fax	(317) 494-6422
E-mail:	corsonl@ecn.purdue.edu

Notes

Provider:	University of Louisville, Kentucky Pollution Prevention Center
Membership:	Academic researchers Business and industry
Internet URL:	www.kppc.org
Affiliations:	University of Louisville
Name:	Cam Metcalf
Position:	Executive Director
Telephone:	(502) 852-0965
Fax	(502) 852-0964
E-mail:	jcmetc01@athena.louisville.edu

Provider:	Massachusetts Institute of Technology Environmental Technology and Public Policy Program
Membership:	Academic researchers
Internet URL:	web.mit.edu/dusp/etpp/index-t.html
Affiliations:	Massachusetts Institute of Technology
Name:	David Laws
Position:	Program Administrator
Name:	Lawrence Susskind
Position:	Co-Principal Investigator
Telephone:	(617) 256-5724
Fax	(617) 253-7402
E-mail:	etp@mit.edu
Name:	Vicki Norberg-Bohm
Position:	Co-Principal Investigator

Provider:	Massachusetts Institute of Technology Program in Technology, Business, and the Environment
Membership:	Academic researchers
Internet URL:	web.mit.edu/ctpid/www/tbe/overview.html
Affiliations:	Massachusetts Institute of Technology
Name:	Dr. John Ehrenfeld
Position:	Director
Telephone:	(617) 253-5724
Fax	(617) 253-7402
E-mail:	Jehren@mit.edu

UNIVERSITY - STATE

Provider:	University of Tennessee Waste Management Research and Education Institute
Membership:	Academic researchers
Internet URL:	www.ra.utk.edu/eerc/wmrei2.html
Affiliations:	University of Tennessee
Name:	Dr. Gary Sayler
Position:	Acting Director
Telephone:	(423) 974-4251
Fax	(423) 974-1838
E-mail:	sayler@utk.edu

Notes

POLLUTION PREVENTION WEBSITES

Department of Energy (DOE) Energy Efficiency and Renewable Energy Network
http://www.eren.doe.gov/
- The DOE Energy Efficiency and Renewable Energy Network offers resources and archives about energy conservation techniques and developments.

Department of Energy (DOE) EPIC Home Page P2 Information Clearinghouse
http://epic.er.doe.gov/epic
- The DOE EPIC home page provides a database search of DOE documents, P2 Regulations, Internet search engines, a P2 Calendar, P2 software, environmental information sources, material exchange, material substitution and recycling information.

Department of Energy (DOE) Office of Industrial Technologies (OIT)
http://www.oit.doe.gov/

- The DOE OIT creates partnerships among industry, trade groups, government agencies, and other organizations to research, develop, and deliver advanced energy efficiency, renewable energy, and pollution prevention technologies for industrial customers.

Defense Environmental Network & Information Exchange (DENIX)
http://denix.cecer.army.mil/
- DENIX provides the general public with timely access to environmental legislative, compliance, restoration, cleanup, safety & occupational health, security, and DoD guidance information. Information on DENIX is updated daily and can be accessed through the series of menus listed below, the site map, or via the DENIX full-text search engine

Energy and Environment – Division of Lawrence Berkeley Laboratory
http://www.lbl.gov/LBL-Programs/

- Berkeley Lab is a pioneer in energy efficient technologies. Among its many contributions are energy saving "superwindows," solid-state ballasts for fluorescent lights, rechargeable electric batteries, and aerogels. In 1993, two out of the three major energy research awards from the U.S. Department of Energy went to Berkeley Lab scientists.

Enviroene Home Page
http://es.epa.gov/index.html
- The most comprehensive environmental website. Provides search services, industry sector notebooks, links to DOE, EPA, DOD, Federal, Regional and State Agencies, Academia, public interest groups, industry and trade associations, international resources, vendor information, material exchange and substitution libraries, P2 information exchange programs and other valuable P2 resources. Information is constantly updated. An information brochure is available through the Pollution Prevention Clearinghouse (Voice Number 202/260-1023). PPIC order number A103.

Enviroene - American Institute for Pollution Prevention Home Page
http://es.epa.gov/aipp/
- The AIPP promotes P2 within industry and throughout society, in part by working through its member organizations. The website provides general P2 information, AIPP meetings, membership organizations, P2 resource materials, P2 publications and P2 project updates.

EPA Home Page
http://www.epa.gov/
- This website provides access to a large amount of information. Users may search for environmentally related information, public information centers, grants and financing, press releases, software, databases and newsletters regarding EPA's policies, regulations and assistance programs. Provides information on EPA's information holdings including documents, TRI, RCRA and other environmental data.

Notes

EPA Region 3 Home Page
http://www.epa.gov/region3/
- This website provides access to information regarding EPA Region 3 offices, programs, staff, and announcements.

EPA Atmospheric Pollution Prevention Division
http://www.epa.gov/appd.html
- This site provides information on the activities of EPA's Atmospheric P2 Division. Information on the Energy Star Program, Green Lights Program, Methane Outreach Program, publications, and software tools are also located at this website.

Global Environmental Network for Info Exchange (GENIE)
http://www-genie.mrrl.lut.ac.uk
- Started in 1992 by the Economic and Social Research Council, the Global Environmental Change Data Network Facility seeks to make information exchange among researchers more convenient.

Great Lakes Regional Environmental Information System
http://epawww.ciesin.org/
- The Great Lakes Website is a regional directory and data access system developed by CIESIN with support from the EPA's great Lakes Program, and the Great Lakes National Program Office. It provides directory information, on-line resources, documentation of EPA's activities in the Great Lakes Region, and a P2 forum for P2 technical assistance providers and P2 vendor information.

Great Lakes Regional Pollution Prevention Roundtable
http://www.hazard.uiuc.edu/wmrc/greatl/
- This site provides a forum for the exchange of information on pollution prevention programs, technologies and regulations impacting the Great Lakes region.

Great Lakes Regional Pollution Prevention Roundtable Tech Info Database
http://es.epa.gov/p2pubs/techpubs/descript.html
- This site provides access to past discussion topics on the Great Lakes Regional Pollution Prevention Roundtable.

International Cleaner Production Info Clearinghouse (ICPIC)
Telnet service through: fedworld.gov
- The ICPIC site provides international resources on cleaner production techniques.

Kentucky Pollution Prevention Center
http://www.kppc.org/about.html
- The Kentucky Pollution Prevention Center (formerly Kentucky Partners) is Kentucky's statewide program helping small and medium-sized manufacturers to identify and implement pollution prevention. They provide information, technical assistance, training, and applied research to help Kentucky manufacturers to voluntarily reduce multi-media waste.

Northeast Business Environmental Network (NBEN)
http://www.nben.org/
- This site provides the latest information on environmental, health and safety issues to businesses of all sizes and types, technical assistance and regulatory agencies, and environmental groups. NBEN sponsors workshops and conferences. In addition, NBEN members share information on proven techniques for implementing environmental management systems and self-auditing.

Ohio Technical Assistance Resources for Pollution Prevention (TARP2)
http://www.epa.state.oh.us/opp/tarp/tarp2.html
- TARP2 is a resource tool designed by the Office of Pollution Prevention within the Ohio Environmental Protection Agency. TARP2 provides an extensive listing of resources for researching P2 opportunities.

Notes

Pacific Northwest Pollution Prevention Center (PPRC)
http://pprc.pnl.gov/pprc
- The PPRC is a nonprofit organization that works to protect the public health, safety and the environment by supporting projects that result in pollution prevention and toxics use elimination and reduction. The database includes over 300 P2 projects. The site offers search engines, up-to-date newsletters, P2 conference schedules and abstracts on P2 research projects. Request for Proposals (RFP) Clearinghouse provides information about P2 projects.

P2 GEMS
http://turi.uml.edu/P2GEMS
- P2GEMS is an Internet search tool for facility planners, engineers, and managers that provides technical, process, and materials management information on the web. It provides access to over 500 P2 resources on the Internet.

P2 Pillar Needs Assessment Report for FY96
http://www.wl.wpafb.af.mil/pprevent
- This site provides access to summaries of the U.S. Air Force Environmental, Safety and Occupational Health Technology Needs Survey. Pollution prevention needs and research on available technology to address these needs are included in a two volume publication.

Pollution Prevention Yellowpages
http://www.p2.org/nppr_yps.html
- The *P2 Yellowpages* is linked to the Enviroene website and provides information on state, local, and federal pollution prevention technical assistance programs.

Material Substitution

EPA RTI's Solvent Alternative Guide (SAGE)
http://clean.rti.org/
- This Database includes a guide to help web browsers find less toxic solvent alternatives. The Solvent Substitution Database in the Enviroene site is another useful website to explore. Hazardous Solvent Substitution Data Systems, Solvent Handbook Database Systems, Department of Defense Technical Library, and the National Center for Manufacturing Science Alternatives Database links are available from Enviroene.

Environmental Stewardship - Pollution Prevention - Los Alamos National Laboratory (P3O)
Material Substitution Resource List
http://perseus.lanl.gov/NON-RESTRICTED/MATSUB_List.html
- This website provides information on material substitution alternatives and links to over 26 material substitution related sites on the Internet.

Illinois Waste Management and Research Pollution Prevention Program
http://www.inhs.uiuc.edu/hwric/p2.html
- This site offers a publications list provided by the HWRIC, a division of the Illinois Department of Energy and Natural Resources.

Recycling Information

Environmental Stewardship - Recycling Programs - Los Alamos National Laboratory
http://perseus.lanl.gov:80/PROJECTS/RECYCLE
- This internet site documents the recycling programs at the Los Alamos National Laboratory. Recycled materials are listed along with links to other recycling information sites in the country.

Global Recycling Network
http://grn.com/grn/
- This site provides recycling related information to buyers and sellers of recyclable commodities.

Notes

Recycler's World
http://www.recycle.net
- This site was established as a world-wide trading site for information related to secondary or recyclable commodities, by products, used surplus items or materials.

Technical Associations, Technology Transfer, and Industry

Air & Waste Management Association
http://www.awma.org/
- This site provides industry publications, membership information, a buyer's guide, meeting dates, employment and educational resources, and links to other relevant sites.

Air & Water Management Association
Delaware: http://www.awma.org/section/delaware/delawaremain.htm
South Atlantic: http://www.stackhawk.com/sasmtgs.htm
Baltimore and Washington: http://www.awma.org/baltwash/baltwas.htm
Virginia: http://www.awma.org/dominion/dominion.htm
- These websites contain information regarding the A&WMA activities for members in EPA Region 3.

The American Plastics Council
http://www.plasticsresource.com/
- The website is organized and formatted to meet the needs of specific user groups. The APC provide general and environmental information on the server.

Envirobiz - International Environmental Information Network
http://www.envirobiz.com/
- The site is sponsored by the International Environmental Information Network, and it provides information about various businesses, policies, environmental technologies, events, products, and environmental services. The site also has searchable databases.

Environmental Law Institute
http://www.eli.org/
- Incorporates ELI publications, programs, law and policy documents related to environmental law.

The National Institute of Standard and Technology (NIST)
http:/www.nist.gov/
- NIST provides a wide variety of services and programs to help U.S. industry, trade other government agencies, academia and the general public improve the quality of their products. The website provides access to international uniform practices.

National Technology Transfer Center's Environmental Technology Gateway
http://www.nttc.edu/environmental.html
- This site is an excellent source of links to other environmental information. It provides information on technology transfer, manufacturing industries, business assistance, conferences, programs, phone numbers, Pollution Prevention Yellow Pages, other general information and links to over 150 websites. Information includes links to various agencies (EPA, DOE, DOD, NASA, and others), federal laboratories, and White House information.

NIST's Manufacturing Extension Partnership
http://www.mep.nist.gov/
- Provides hands-on technical assistance to America's smaller manufacturers.

Notes

Project XL
http://199.223.29.233/ProjectXL/xl_home.nsf/all/homepage
- Project XL is a national pilot program that tests innovative ways of achieving better and more cost-effective public health and environmental protection. Under Project XL, sponsors (private facilities, industry sectors, Federal facilities, and communities) can implement innovative strategies that produce superior environmental performance, replace specific regulatory requirements, and promote greater accountability to stakeholders. The website provides information on the specific XL projects, legal and policy documents, EPA contacts and access to an XL Communities Home Page.

The Tellus Institute
http://www.tellus.com
- The Tellus Institute is a nonprofit organization that offers P2 information regarding resource management and environmental issues.

UCLA Center for Clean Technology (CCT)
http://cct.seas.ucla.edu/cct.pp.html
- The site provides information on P2 research conducted at the CCT. Research and novel educational efforts focus on developing innovative technologies and improving the understanding of the flow of materials.

United Nationals Environment Program
http://www.unep.or.jp/
- This site provides a survey of databases on environmentally sound technologies

The Water Environment Federation
http://wef.org/
- The WEF provides information on information searches, links, catalogs, events, missions and other activities as they relate to water issues.

Waterwiser
http://www.waterwiser.org/
- Waterwiser provides a source of information on water efficiency and conservation.

Design for the Environment

Carnegie Mellon University Green Design Initiative Home Page
http://www.ce.cmu.edu/GreenDesign/
- This site provides access to research, publication lists, and education programs in green design.

Pacific Northwest Laboratory's Design for Environment Page
http://pprc.pnl.gov/pprc
- The PPRC is a nonprofit organization that works to protect public health, safety and the environment by supporting projects that result in pollution prevention and the elimination or reduction in toxics use. The database includes over 300 P2 projects. The request for Proposals (RFP) Clearinghouse provides information about P2 projects. The site offers search engines, up-to-date newsletters, P2 conference schedules and abstracts on P2 research projects.

Sources of Environmental Responsible Wood Products
http://www.ran.org/ran/ran_campaigns/rain_wood/index.html
- Information on environmentally sound wood product alternatives is available at this site.

UC Berkeley Consortium on Green Design and Manufacturing
http://greenmfg.me.berkeley.edu/green/Home/Index.html
- Research, publications, contacts and green design software is available at site.

Notes

State Internet Programs

Alabama DEM
http://www.adem.state.al.us
- This site offers information on ADEM contacts, organization structure, rules and regulations, daily ozone and AQI and a calendar of events.

California Environmental Protection Agency (Cal/EPA), Dept. of Toxic Substances Control
http://www.calepa.ca.gov/dtsc/txpollpr.htm
- This site provides a list of publications for various processes and industries.

Colorado Dept. of Public Health & Environment
http://www.sni.net/light/p3/
- This site has information on the P2 program's free, confidential on-site assessments; telephone consultations; industry-specific fact sheets and case studies; training programs and technical workshops; a resource library; presentations to trade and industrial organizations; program development and support for local governments and tribes; grants for entities involved in providing pollution prevention educational and outreach activities; and technical assistance.

Connecticut Dept. of Environmental Protection, P2 & Compliance Assurance
http://dep.state.ct.us/Cmrsoffc/Initiatv/p2.htm
- This site provides technical assistance to state agencies and small businesses; and educational programs for the public, businesses, and institutions, financial assistance for small businesses, and evaluation of marketing strategies, incentives and other forms of assistance for development of new technologies or products that support pollution prevention.

Delaware DNREC
http://www.dnrec.state.de.us/
- This site provides access to DNREC air, waste, water, and emergency services programs. Links to pollution prevention programs for businesses is available through this site.

Florida DEP Pollution Prevention Program
http://www.dep.state.fl.us/waste/programs
- Direct access to Florida's P2 resource center and technical assistance programs is available at this site. Factsheets, case studies and a calendar of events is also available.

Georgia Pollution Prevention Assistance Division
http://www.Georgianet.org/dnr/p2ad/
- Provides a list of servers and P2 assistance programs on national and regional levels.

Illinois Waste Management and Research Center
http://www.hazard.uiuc.edu/wmrc/
- This site provides information on available pollution prevention services, access to library/clearinghouse, research funding and GLS and environmental database services.

Indiana Dept. of Environmental Management, Office of P2 & Technical Assistance
http://www.state.in.us/idem/
- This site includes information on source reduction plans for industries to prevent pollution, grant programs to encourage innovation in pollution reduction, state-wide recycling efforts, and education and outreach efforts through workshops and seminars.

Kansas State University Pollution Prevention Institute
http://www.oznet.ksu.edu/dp_nrgy/ppi/ppihome.htm
- This site provides access to PPI fact sheets, case studies, publications list and staff.

Notes

Kentucky Pollution Prevention Center
http://www.kppc.org/
- Pollution prevention staff, newsletters, training calendar and information on the materials exchange, ISO 14000/EMS Alliance, Wood Waste Alliance, environmental justice and other useful sites are available.

Kentucky Business Environmental Assistance Program
http://gatton.gws.uky.edu/KentuckyBusiness/kbeap/kbeap.htm
- Regulatory updates, publications, permit applications and other related sites are accessible through this site.

Louisiana DEQ Home Page
http://www.deq.state.la.us/
- This site provides access to DEQ Offices and a calendar of events. The search engine searches for specific topics by using key words and phrases.

Maine DEP's P2 Resource List
http://www.state.me.us/dep/p2list.htm
- In addition to providing general P2 information on their website, the Maine Department of Environmental Quality lists pollution prevention resources available on the Internet. Technology transfers, P2 equipment information, on-line networking, library information, document search, chemical data, regulatory, recycling, and environmental software links are listed in the server.

Michigan DEQ
http://www.deq.state.mi.us/ead/
- This website contains pollution prevention information provided by the Michigan EPA. Regional information regarding the Environmental Assistance Division is provided. Program descriptions, contact names, bulletins, calendars, publications, fact sheets and other Internet linkages to Environmental sites are listed.

New Jersey Technical Assistance Program for Industrial Pollution Prevention
http://www.njit.edu/njtap
- This site contains information on NJTAP's functions: provides environmental opportunity assessments; functions as an information clearinghouse for literature and videotapes related to pollution prevention; delivers education and training; and adopts and develops novel pollution prevention technologies.

New York Dept. of Environmental Conservation, P2 Unit
http://www.dec.state.ny.us/website/pollution/prevent.html
- The P2 Unit provides technical and compliance assistance to help public and private interests. The P2 Unit implements regulatory programs and encourage public and private interests to avoid generating pollutants and to reduce, reuse and recycle waste materials to attain a 50-percent reduction in waste.

North Carolina Waste Reduction Resource Center of the Southeast
http://owr.ehnr.state.nc.us/wrrc/
- The WRRC, located in Raleigh, NC, was established in 1988 to provide multimedia waste reduction support for U.S. EPA Regions III and IV.

Ohio EPA Office of Pollution Prevention
http://www.epa.ohio.gov/opp/oppmain.html
- This website lists the service provided by the Ohio EPA and provides an extensive list of resources available in researching pollution prevention opportunities.

Pennsylvania DEP - P2 and Compliance Assistance
http://www.dep.state.pa.us/dep/deputate/pollprev/pollution_prevention.html
- Access to publications, conference information and current events, as well as green technologies and technical assistance.

Notes

Pennsylvania Small Business Assistance Program
http://www.dep.state.pa.us/dep/deputate/airwaste/aq/Small_Business/small_business.htm
- This site offers hands-on assistance for small businesses from the PA EPA. Specific regulations and P2 opportunities for several industries are mentioned.

TNRC (Texas) Office of P2 and Recycling
http://www.tnrcc.state.tx.us/exec/oppr/index.html
- Pollution prevention programs, staff and access to the Small Business Assistance Program (http://www.tnrcc.state.tx.us/exec/small_business/index.html) is accessible through this site.

Virginia DEQ, Office of Pollution Prevention
http://www.deq.state.va.us/opp/opp.html
- This site contains fact sheets, success stories, a newsletter, publications, p2 links, and a link to Businesses for the Bay.

Washington Department of Ecology Home Page
http://www.wa.gov/ecology/
- Access to Ecology resources, laws and regulations, tools, and publications is available at this site.

Academic Resource Centers

The National Pollution Prevention Center (NPPC) for Higher Education
http://www.umich.edu/~nppcpub/index.html
- The site provides educational material to universities, professionals and the public. The NPPC actively collects, develops and disseminates pollution prevention educational materials.

Federal Government Sites

The Code of Federal Regulations
http://law.house.gov/cfrexpl.htm
- This site contains a complete list of federal regulations.

Department of Energy's Environmental Management Home Page
http://www.em.doe.gov/
-This site provides access to DOE's environmental management page and information clearinghouse.

Fedworld
http://www.fedworld.gov/
- This website provides a gateway to over 125 federal Bulletin Boards.

Library of Congress
telnet:://locis.loc.gov/
- This site allows the web browser to search for topics by author, book, subject, keyword, etc.

Research Triangle Park Air BBS
telnet://ttnbbs.rtpnc.epa.gov/
- The website provides information for professionals in the air monitoring and air pollution control areas.

THOMAS
http://thomas.loc.gov/
- The website contains full text documents of current congressional legislation.

Notes

Environment, Health, and Safety

Great Links Page
http://tis.eh.doe.gov/
- The website provides accurate and current information regarding MSDS sheets, EPA Chemical Fact Sheets, and other topics related to materials, health and safety.

OSHA
http://www.osha.gov/
- This website provides information on OSHA standards, programs and services, compliance assistance programs, and technical information.

Water Online
http://www.wateronline.com/
- This site supplies information on manufacturers markets, discussion forums, engineering technology, resource libraries and associations.

Energy Conservation Related Servers

Climate Wise
http://www.epa.gov/oppeinet/oppe/climwise/cwweb/index.htm
- This site provides information on EPA's Climate Wise program; a government-industry partnership that helps businesses improve energy efficiency and reduce greenhouse gas emissions.

DOE Energy Efficiency and Renewable Energy Network
http://www.eren.doe.gov/
- This site is the primary page for obtaining information from Energy Efficiency.

The Electric Power Research Institute (EPRI)
http://www.epri.com/
- EPRI provides research and development activities and P2 initiatives for the electric utility industry.

The Energy Analysis and Diagnostics Center (EADC)
http://128.6.70.23/
- This site provides links to information from the Industrial Assessment Center headquartered at Rutgers University.

Energy Information Administration
http://www.eia.doe.gov/
- This site offers information on energy prices, consumption information, and forecasting for a variety of fuel groups.

Technology Transfer

EPA Online Library System
telnet://epaibm.rtpnc.epa.gov/ Login Password: "public access"
- The site provides web browsers access to a hazardous waste database.

National Technology Transfer Center's Environmental Technology Gateway
http://www.nttc.edu/environmental.html
- This site is an excellent source of links to other environmental information. Provides information on technology transfer, manufacturing industries, business assistance, conferences, programs, phone numbers, Pollution Prevention Yellow Pages, other general information and links to over 150 websites. Information includes links to various agencies (EPA, DOE, DOD, NASA, and others), federal laboratories, and White House information.

Notes

Plating/Finishing

American Electroplating and Surface Finishing Industry Home Page
BB # 201-838-0113 or http://www.aesf.org
-The website features Industry specific information regarding P2 technologies and environmental issues in the Electroplating and surface Finishing Industry.

Finishing Industry Homepage
http://www.finishing.com
- This site provides information on new technologies, resources, conferences, and problems encountered by businesses involved in metal finishing, specifically anodizing, plating, power coating, and surface finishing.

National Metal Finishing Resource Center
http://www.nmfrc.org
- Provides vendor information, compliance assistance and access to Common Sense Initiative research and development and access to a technical database.

ISO 14000

EPA Standards Network (ISO 14000)
http://es.epa.gov/partners/iso/iso.html
- The website provides information on ISO Environmental Management Standards and their potential impact in the United States.

Exploring ISO 14000
http://www.mgmt14k.com
- A primer to the ISO 14000, this site includes features like frequently asked questions, full text articles. The site covers ISO 14000 in depth and touches on ISO 9000 as well.

International Organization on Standardization (ISO)
http://www.iso.ch/meme/TC207.html
- The official organization for information on ISO 14000 and other international standard documentation. The URL points to the actual provisions of the ISO 14000 as directed by the Technical Committee 207, its administering body.

ISO 14000 Info Center
http://www.ISO14000.com/
- This website provides information on ISO 14000 articles, education and training, opportunities, a list of certified companies, publications, organizations, and other resources.

ISO Online
http://www.iso.ch/infoe/guide.html
- ISO Online is an electronic information service providing information on international standards, ISO technical committees, meetings, and calendar.

NIST's Global Standards Program (GSP)
http://ts.nist.gov/ts/htdocs/210/216/216.htm
- NIST promotes the economic growth of U.S. industry by helping develop and apply technology. General ISO 14000 information is provided.

Printing

Laser Printer Toner Cartridge Remanufacturing Information
http://www.toners.com/
- Describes a list of products and available locations.

Notes

Printing Industry of America
http://www.printing.org/
- Provides information on technical assistance, education and publications, industry research and upcoming legislation.

Printer's National Environmental Assistance Center
http://www.inhs.uiuc.edu/pneac/pneac.html
- Provides documentation of environmental impacts of the printing industry and offers technical assistance to the printing industry. The site has links to Enviroene and other websites.

Affirmative Procurement

Affirmative Procurement
http://www.epa.gov/epaoswer/non-hw/procure.htm
- This website provides a list of guidelines and resources to assist federal, state, and local agencies and others purchase and use products containing recovered materials.

Compliance Assistance

Agriculture Compliance Assistance Center (AgCenter)
http://es.epa.gov/oeca/ag/
- The AgCenter provides "one-stop shopping" for the agriculture community, including information on the latest pollution prevention technologies and EPA requirements.

Automotive Service and Repair: Greenlink™
http://www.ccar-greenlink.org
- This site offers access to environmental compliance information and pollution prevention information to those working in the automotive service, repair, and autobody industry.

National Metal Finishing Resource Center
http://www.nmfrc.org/welcome1.htm
- This website offers vendor directories, technical databases, conference information, and compliance assistance.

Cleaner Production

Climate Wise
http://www.epa.gov/oppeinet/oppe/climwise/cwweb/index.htm
- This site provides information to EPA's Climate Wise program; a government-industry partnership that helps businesses improve energy efficiency and reduce greenhouse gas emissions.

United Nations Environment Programme
http://www.unep.or.jp/
- This site provides a survey of databases on environmentally sound technologies.

Life Cycle Analysis

Life Cycle Assessment

ECOSITE
http://www.ecosite.co.uk/
- Provides information on recent events in LCA, case studies and downloadable copies of software.

European Network for Strategic Life Cycle Assessment Research and Development
http://www.leidenuniv.nl/interfac/cml/lcanet/hp22.htm
-A platform for LCA research and development.

Notes

EcoDS (Environmentally Conscious Decision Support System)
http://shogun.vuse.vanderbilt.edu/usjapan/ecods.htm
- Site for a decision support tool for a cost-risk evaluation of environmentally conscious alternatives using streamlined LCA.

APPENDIX B

Notes

THERMODYNAMIC ANALYSIS

Topics covered are selected materials from thermodynamics. Included are areas that are most likely to be less familiar to a general auditor.

Psychrometrics

Psychrometrics is the study of moist air equilibrium thermodynamics process. Why is it important? People need to maintain an internal environment that is comfortable (temperature, humidity, fresh air). Therefore, the HVAC system must regulate all three variables.

Exhibit B.1: Variable for HVAC Regulation

Variable	Summer	Winter
Temperature	High	Low
Humidity	High	Low
Air Flow	Low	Low

The brief summary covers:

1. Properties of real air
2. Limitations due to saturation (Boiling Curve)
3. Definitions of state variable
   - Humidity Ratio (lb of moisture/lb of dry air)
   - Enthalpy (Btu/lb of dry air)
   - Specific Volume = 1/Density

The molecular weight of air is given as:

$$m = 28.9645 \frac{lb_m}{lb \times mol}$$

Thus, the gas constant can be found for air, R_a, by dividing the universal gas constant by the molecular weight.

$$R_a = \frac{1545.32}{28.9645} = 53.352 \frac{ft \times lb}{lb_m \times R}$$

Notes

Properties of Air

Exhibit B.2: Components of Air

Component	% By Volume
N_2	78.8
O_2	20.95
Ar	0.93
CO_2	0.03
Ne	0.0018
He	0.005
CH_4	0.00015
H_2	0.00005
SO_2	Small
Kr	Small
Xe	Small
O_3	Small

Water Vapor

By manipulating the ideal gas equation, a relationship between the ideal gas law and the density for air can be developed.

$$PV = mRT \quad \text{or} \quad \rho = \frac{m}{V} = \frac{P}{RT}$$

Looking at the new equations one can see that the density in the inversely proportional to the gas constant R. So using the information obtained for air in the previous section the density of air to the density of water vapor based on proportionality can be compared.

$$\rho_a \propto \frac{1}{53.352} >> \rho_w \propto \frac{1}{85.778}$$

From this, it can be concluded that water vapor is much less dense than dry air.

Real Air (Moist Air)

Realistically, air is not completely dry; it contains some moisture.

- x% Water Vapor
- (1-x)% Dry Air

In order to determine the density of real air, one must consider the densities of both dry air and water vapor.

$$\rho = \rho_a + \rho_w$$

Then substitute the densities with the ideal gas relation found in the previous section.

Notes

$$= \frac{P_a}{R_a T} + \frac{P_w}{R_w T}$$
$$= \frac{P - P_w}{R_a T} + \frac{P_w}{R_w T}$$
$$= \frac{P}{R_a T} - \frac{P_w}{R_a T}(1 - \frac{R_a}{R_w})$$
$$= \frac{P}{R_a T} - 0.378 \frac{P_w}{R_a T}$$

Amount of Water Vapor in a Moist Air Mixture

The amount of moisture in air is described by the humidity ratio, W. The humidity ratio can be defined by:

$$W = \frac{lb_m of\ moisture / V}{lb_m of\ dry\ air / V}$$

Some manipulation and substitution yields an expression for the humidity ratio.

$$W = \frac{x_w m_w}{x_a m_a} = \frac{m_w}{\frac{m}{x_a}} x = \frac{18.015}{\frac{28.9645}{1 - x_w}} x_w$$

$$W = \frac{0.622 \frac{P_w}{P}}{1 - \frac{P_w}{P}} = 0.622 \frac{P_w}{P - P_w} = 0.622 \frac{P_w}{P_a}$$

This expression shows that the humidity ratio is proportional to the ratio of water pressure to the air pressure. The figure below shows how the humidity ratio varies with respect to temperature. As one can see, the humidity ratio increases significantly as temperature increases.

Exhibit B.3: Humidity vs. Temperature

(Boiling Curve)

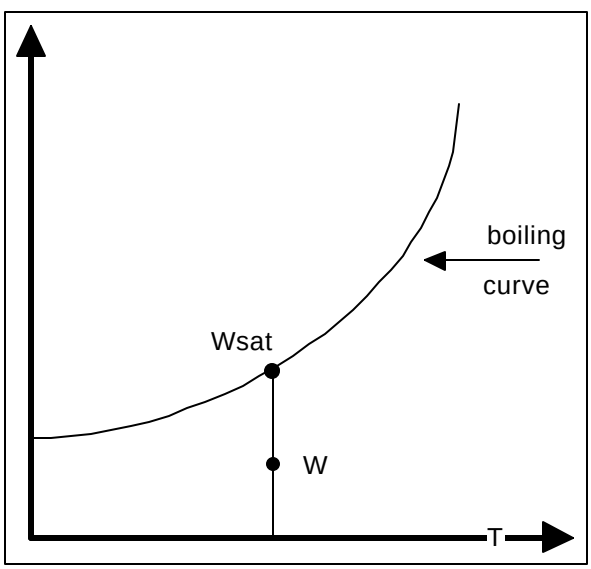

Energy Content

Enthalpy, h, is a measure of the energy content in the air. The enthalpy of an air/moisture mixture can be expressed as:

Notes

$$h = h_a + Wh_w$$

using

$$h_a = 0.24T$$
$$h_w = h_{fg}(at\ 32.2°F) + C_{p,s}(T - 32)$$

where

h_{fg} = latent heat of vaporization, Btu/lb

$C_{p,s}$ = specific heat of water vapor = .0444 Btu/lb - °F

Substituting these in for the first equation results in:

$$h = 1075.15 + 0.444(T - 32)$$
$$= 1061 + .0444$$
$$\therefore h = 0.24T + W(1061 + .444T)$$

where

T is in °F

W is in $lb_{m,w}/lb_{m,a}$

Relative Humidity

$$f = \frac{x_w}{x_{w,s}} = \frac{f(T, \frac{P_w}{P})}{f(T)}$$
$$= P\frac{\frac{P_w}{P}}{\frac{P_{w,s}}{P}} = \frac{P_w}{P_{w,s}}$$

where $P_{w,s}$ is found from the Boiling Curve

$$0 \le \phi \le 1$$

Given ϕ and T to get W:

1. $T \rightarrow P_{w,s}$ (from Boiling Curve)
2. $P_w = \phi P_{w,s}$
3. $W = 0.622\ (P_w/(P-P_w))$

Specific Volume

Specific volume is defined as the volume per unit mass.

$$v_a = \frac{v}{m_a}$$

Once again using the ideal gas law

Notes

$$PV = RT$$

$$v_a = \frac{R_a T}{P_a} = \frac{R_a T}{P - P_w} = \frac{R_a T}{P(1 - \frac{P_w}{P})}$$

$$\frac{R_a T}{P_a} = [1 + 1.608 W]$$

Since specific volume is volume divided by mass, it can also be defined as the inverse of density (mass divided by volume).

$$r = \frac{1}{v_a}$$

Psychrometric Example

Given : $T_1 = 90\,°F$, $= .090$

Calculate the energy per pound of dry air to cool to $57°F$, $f = 1$.

Method 1 (Analytical)

- At State 1:

$xw,1 = .090 = Pws,1$

(from Table 2 in Chapter 6 of ASHRAE Fundamentals)

$Pws,1 = 0.6489\ psi$

$P = (0.90)(0.6489) = .0629\ psi$

$W1 = 0.622 \times 0.629(14.7 - 0.629) = 0.02780$ [lbm/lba]

$h1 = (0.24)(90) + (0.02780)[1061 + (0.444)(90)] = 52.2$

- State 3

$Pwas,3 = Pws,57 \text{ deg } F = 0.2302\ psi$

$h = (0.24)(57) + (0.009895)[1061 + (0.444)(57)] = 24.4$ [Btu/lb.]

$\therefore \wedge h = 24.4 - 52.2 = -27.8$ [Btu/lb of dry air]

Method 2 (Graphical)

1. Locate point 1 at T_1 =90°F, ϕ=0.90

   Read $h_1 \approx 52.5$ Btu/lb

2. Locate point 3 at T_3 =57°F, ϕ=1

   Read $h_1 \approx 24$ Btu/lb

3. Calculate Δh

   Δh= 24 - 52.5 = -28.5

Notes

Exhibit B.4: Humidity vs Temperature (Boiling Curve)

For Psychrometric Example

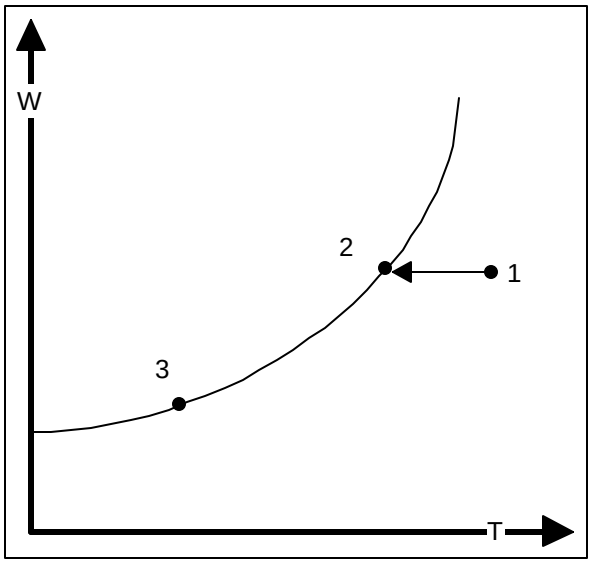

Air Conditioning Processes

Air conditioning of air is done to ensure proper conditions for a specific process or make more pleasant working environment for the people.

Heat Addition to Moist Air

Exhibit B.5: Humidity vs. Temperature

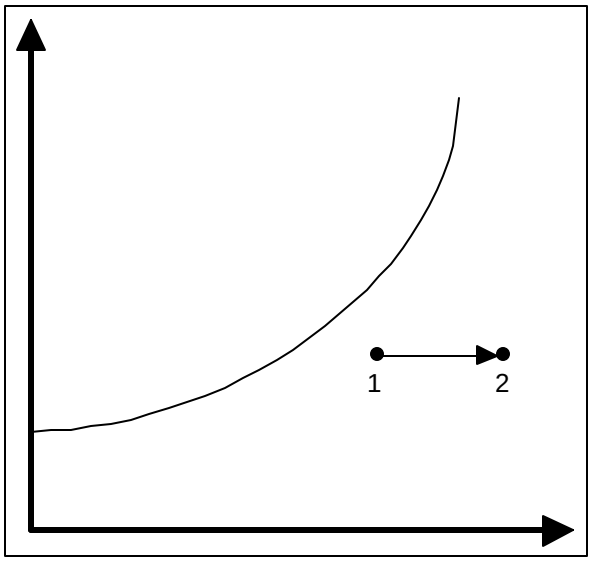

Notes

Exhibit B.6: Conservation of Mass

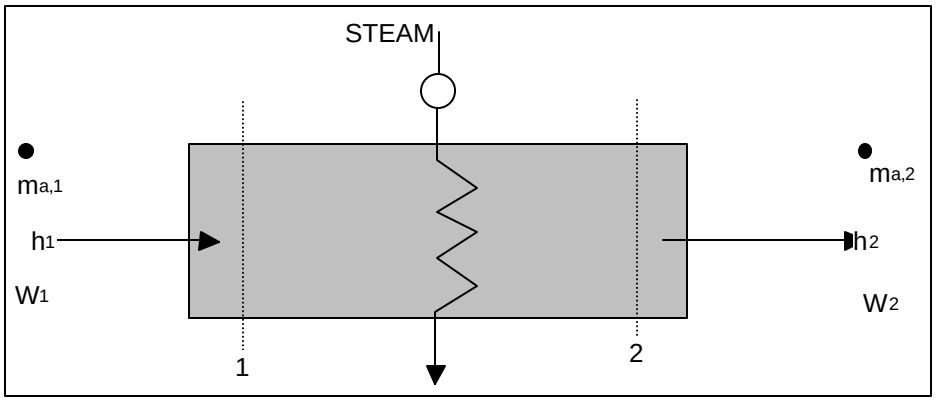

Conservation of mass

$$\dot{m}_{a,1} = \dot{m}_{a,2}$$

$$\dot{m}_{a,1} w_1 = \dot{m}_{a,2} w_2 \rightarrow w_2 = w_1$$

Conservation of energy

$$q_{1 \rightarrow 2} = \dot{m}_{a,1}(h_2 - h_1)$$

Example

Given : $T1 = 35°F$, $f_1 = 100\%$, 20,000 cfm$_1$

Air to be heated to $100°F$

Find : The heater size required.

- State 1

  Specific volume = 1/Density

$$v = \frac{1}{r} = \frac{RT}{P}[1 + 1.608W]$$

$$r = \frac{P_{a,1}}{R_a T_1[1 + 1.608W_1]}$$

$$= \frac{(14.7)(144)}{(53.35)(460 + 35)(1 = 1.608W_1)}$$

$P_{ws,1} = 0.09998 \rightarrow$ from tables or charts at $35°F$

$\therefore P = (0.09998)(1) = 0.09998$

$W_1 = 0.622 \times 0.09998 / (14.7 - 0 / 0.09998) = 0.004259$

$\therefore h_1 = (0.24)(35) + (0.004259)[1061 + (0.444)(35)]$

$h_1 = 12.985$ Btu/lb

- State 2

$W_2 = W_1 = 0.4259$

$h_2 = (0.24)(100) + (0.004259)[1061 + (0.444)(100)]$

$h_2 = 28.708$

Notes

Calculate the mass flow rate of air:

$$\dot{m}_a = (20{,}000\,\frac{ft\text{^}3}{\min})(60\,\frac{\min}{hr})\,\boldsymbol{r}_{a,1}$$

$$\boldsymbol{r}_{a,1} = \frac{(14.7)(144)}{(53.35)(495)[1+(1.608)(0.004259)]} = 0.07961\,\frac{lb}{ft\text{^}3}$$

$$\dot{m}_a = (20{,}000\,\frac{ft\text{^}3}{\min})(60\,\frac{\min}{hr})(0.07961\,\frac{lb}{ft\text{^}3}) = 95{,}534\,\frac{lb}{hr}$$

$$q_{1\to 2} = (95{,}534\,\frac{lb}{hr})(28.708 - 12.985\,\frac{Btu}{lb}) = 1.502\,million\frac{Btu}{hr}$$

$$q_{boiler} = \frac{1.502\times 10^6}{n_{boiler}} = \frac{1.502\times 10^6}{0.8} = 1.878\times 10^6\,\frac{Btu}{hr}$$

Cooling of Moist Air

Exhibit B.7: Humidity vs. Temperature

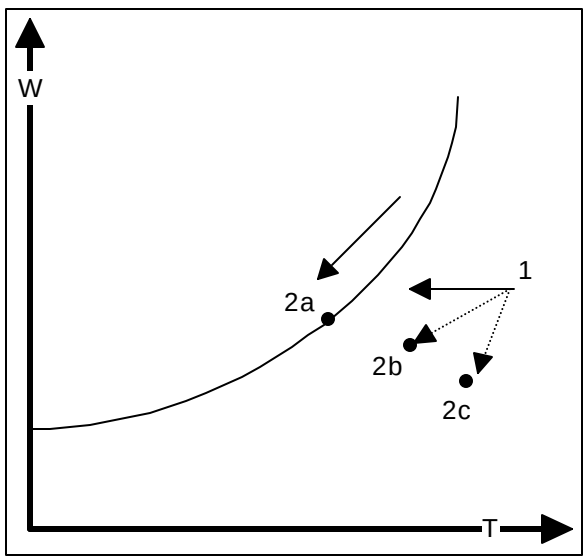

Notes

Exhibit B.8: Mass Conservation

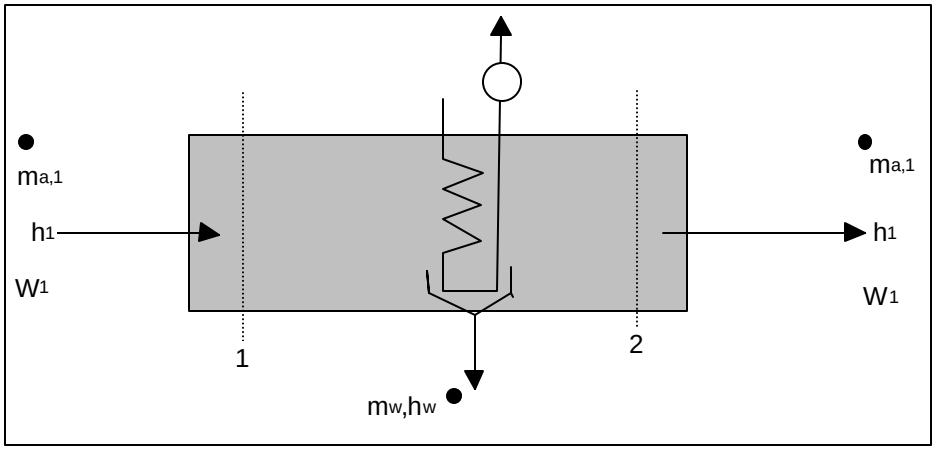

Exhibit B.9: Boiling Curve

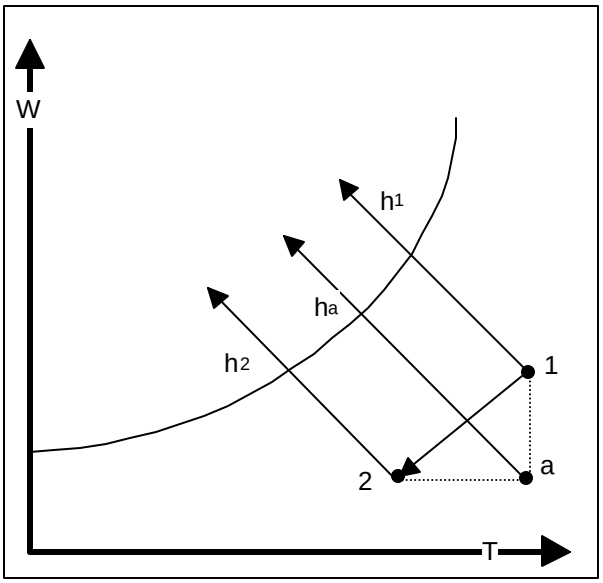

$h_1 - h_a$ is all latent heat removal

$h_a - h_2$ is all sensible heat removal

$h_1 - h_2$ is total heat removal

Example

Determine the tons of refrigeration required to cool 10,000 cfm of air at 85 °*F* dry bulb teperature, $f = 0.50$, to 50 °*F*, $f = 1$.

Notes

Exhibit B.10: Boiling Curve

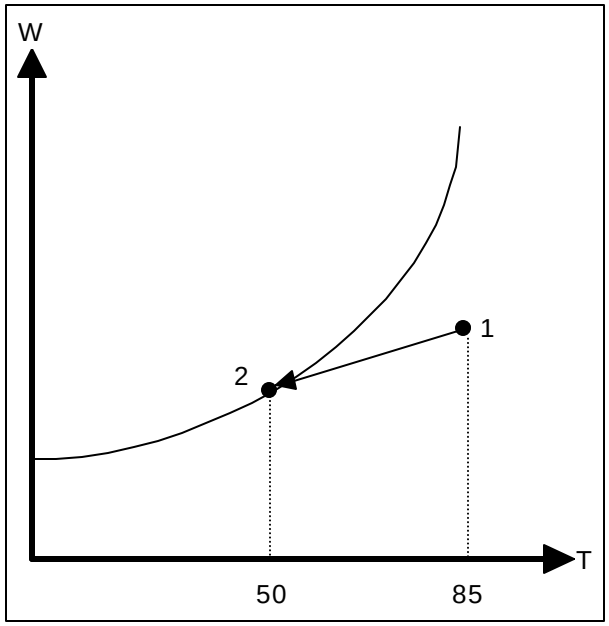

From the chart

$$h_1 \approx 34.5 \qquad v_1 \approx 14.01$$
$$h_2 \approx 20.2 \qquad W_1 \approx 0.013$$
$$W_2 \approx 0.0076$$

From tables $h_{w,2} = 18.11$ Btu/lb$_a$

or

$$h_{w,2} = C_p = 1\{\text{Btu/[lb deg } F(50 - 32 \text{ deg } F)]\} = 18 \text{ Btu/lb}_a$$

$$\dot{m}_a = (10{,}000 \text{ ft}^3/\text{min})/(14.01 \text{ ft}^3/\text{min}) = 713.8 \text{ lb dry air per minute}$$

$$q_{1 \to 2} = \dot{m}_a[(h_2 - h_1) + (W_1 - W_2)h_w)$$

$$= [713.8(\text{lb/ min})]\{[20.2 - 34.5(\text{Btu/lb})] + (0.013 - 0.0076)(18)(\text{Btu/lb})\} = -10.138 \text{ Btu/min}$$

That is, the heat removal rate is 10,138 Btu/min or 608,278 Btu/h.

$$1 \text{ ton of A/C} = (1 \text{ ton of ice/day}) \times (\text{day}/24 \text{ hr}) \times (144 \text{ Btu/lb}) \times (2000 \text{lb/ton})$$

where the later heat of fusion for ice is 144 Btu/lb.

$$1 \text{ ton fo A/C} = 12{,}000 \text{ Btu/h}$$

$$q = \frac{608{,}278 \text{ Btu/hr}}{12{,}000 \text{ Btu/hr ton}} = 50.7 \, tons$$

Heat Loss Calculations

$$Q = Q_{TRANS} + Q_{INFIL}$$

where

Q= total heat loss

Q_{TRANS} = transmission heat loss

Q_{INFIL} = infiltration heat loss

Notes

$$Q_{TRANS} = UA(T_i - T_o)$$

where

UA = heat loss coefficient

T_i = inside air temperature

T_o = outside air temperature

$$Q_{INFIL} = Q_{SENS} + Q_{LATENT}$$

where

Q_{SENS} = sensible heat loss

Q_{LATENT} = latent heat loss

$$Q_{SENS} = V_p\, C_p(T_i - T_o)$$

where

V = volume of air entering building

p = air density

C_p = specific heat of air

$$Q_{LATENT} = V_p\, (W_i - W_o)h_{fg}$$

where

W_i = inside air humidity ratio

W_o = outside air humidity ratio

h_{fg} = latent heat of vapor at T_i

Simple Equations for Standard Air

$$Q_{SENS} = 0.018 \text{ x } V(T_i - T_o)$$

$$Q_{LATENT} = 79.5 \text{ x } V\,(W_i - W_o)$$

Notes

Heat Gain Calculations

$$Q = Q_{TRANS} + Q_{FEN} + Q_{INT}$$

where

Q_{FEN} = fenestration heat gain

Q_{INT} = internal heat gain

$$(Q_{TRANS} / A) = \alpha I_t + h(T_o - T_s) - \epsilon \alpha R$$

where

α = absorptance of surface for solar radiation, no unit

I_t = solar radiation incident on surface, Btu/hr ft^2

h_o = heat transfer coefficient, BTU/hr ft^2

T_o = outdoor air temperature, °F

T_s = surface air temperature, °F

ϵ = emittance of surface, no units

R = difference between radiation incidence on the surface and black body radiation at T_o, Btu/hr ft^2

$$(Q_{TRANS} / A) = h_o(T_{SOL-AIR} - T_S)$$

$$T_{SOL-AIR} = T_o + \alpha I_t / h_o - \epsilon \alpha R / h_o$$

Notes

APPENDIX C

ENERGY AND WASTE INSTRUMENTATION FOR ASSESSMENTS

It is important to be able to gather all the information necessary for competent evaluation of energy usage and waste generation. Hardware designed to help data collection is available and should be used. Since manufacturers of measuring equipment constantly strive for better products it is a good practice to keep up with the latest development in the field. Then one is able to make use of state-of-the-art technology to achieve better results in his or her own work.

Equipment List

___1. Thermo Anemometer

___2. Velometer - (Analog)

___3. Amprobe Ampere Meter (Digital)

___4. Amprobe Ampere Meter (Analog)

___5. PWF Meter

___6. Rubber Gloves

___*7*. Infra Red-Temp Sensor - *Kane May 500*

___8. Temperature Probes/*Flukes* Meters

___9. Light Meters

___10. Combustion Analyzer - *Kane May 9003* (Silver)

___11. Combustion Eff. Computer and Separate Probe

___12. Ultra Sonic Flow Meter

___13. Drill and Bit from ME shop

___14. Safety Glasses, Ear Plugs

___15. Dust Masks

___16. Amprobe Chart Recorder

___17. Energy Conservation Opportunity Books

___18. Tool Box (include flashlight, wire brush, rags)

___19. Preaudit Data Sheet

Number of Cases taken to site _____.

Notes

Product and Supplier List

Combustion Analyzer

Energy Efficiency Systems
Enerac 2000 - $3,000
Pocket 100 - $1,500
1300 Shames Drive
Westbury, NY 11590
(800) 695-3637

Universal Enterprises
KM9003 - $2,000
5500 South West Arctic Drive
Beaverton, OR 97005
(503) 644-9728

Goodway Tools Corporation
ORSAT and EFF-1
404 W. Avenue
Stanford, CT 06902
(203) 359-4708

Bacharach, Inc.
FYRITE II - $695
625 Alpha Drive No CO or Combustibles
Pittsburgh, PA 15238
(412) 963-2000

Dwyer Instruments, Inc.
Highway 212 at 12
P.O. Box 373
Michigan City, IN 46360
(219) 872-9141

Milton Ray Company
Hays-Republic Division
742 East Eighth Street
Michigan City, IN 46360

Burrell Corporation
2223 5th Avenue
Pittsburgh, PA 15219

Amp Probe

Grainger
Analog Amprobe #RS3 - $100
Digital Amprobe #3A360 - $350
4885 Paris Street
Denver, CO
(303) 371-2360

Cogeneration:

Martin Cogeneration Systems (913) 266-5784
1637 SW 42nd St.
PO Box 1698
Topeka, KS 66601

Waukesha/Dresser
Waukesha Engine Division
Dresser Industries
1000 W St. Paul Ave.
Waukesha, WI 53188

Tecogen Inc.
45 1st Ave.
PO box 9046
Waltham, MA 02254-9046

Stewart and Stevenson, Inc.
Gas Turbine Product Division
16415 Jacintoport Blvd.
Houston, TX 77015
(713) 457-7519

Boilers:

Kewanee Boiler Corporation
Suite 200
16100 Chesterfield Village Parkway
Chesterfield, MO 63017
(314) 532-7755

Boiler Efficiency Institute
School of Engineering
Auburn University
PO Box 2255
Auburn, AL 36830

(Steam Traps)
Yarway Corporation
PO Box 1060
Wheaton, IL 60189
(312) 668-4800

Weben-Jarco Inc.
PO Box 763460
Dallas, TX 75376-3460

Uniluc Manufacturing Company Inc.
(416) 851-3981
140 Hanlan Rd.
Woodbridge (Toronto) Ontario, Canada L4L3P6

Notes

Waste Heat Recovery:

Beltran Associates, Inc.
200 Oak Dr.
Syoset, NY 11791
(516) 921-7900

Therma Stak
1-800-521-6676
Des Champs Labs Inc.
(201) 884-1460

Z Duct Energy Recovery Systems
PO Box 440
17 Farinella Dr.
East Hanover, NJ 07936

Pumps:

ITT Bell & Gossett
8200 N. Austin Ave.
Morton Grove, IL 60053
(708) 966-3700

Ingersoll Rand
1-757-485-8037

Taco, Inc.
1160 Cranston St.
Cranston, RI 02920
(401) 942-8000

Lighting:

Valmont Electric (217) 446-4600
Hunt Electronics
1430 E. Fairchild St.
Danville, IL 61832

The Watt Stopper, Inc.
296 Brokaw Rd.
Santa Clara, CA 95050
(408) 988-5331

MagneTek Universal Manufacturing
200 Robin Rd.
Paramus, NJ 07652
(201) 967-7600

Philips Lighting Company (908) 563-3000
200 Franklin Square Dr.
PO Box 6800
Somerset, NJ 08875-6800

Powerline Communications, Inc.
(Light Controls)
123 Industrial Ave.
1-800-262-7521
Williston, VT 05495

Conservolite, Inc.
PO Box 215
Oakdale, PA 15071
(412) 787-8800

General Electric
4400 Cox Rd.
Glen Allen, VA 23058-4200
1-800-327-0097

Implementation Costs/Pricing:

RS Means Company Inc. 1-800-334-3509
100 Construction Plaza
PO Box 800
Kingston, MA 02364-0800

Grainger
Regional Offices
http://www.grainger.com

General Information:

ASHRAE Handbook of Fundamentals

HVAC:

McQuay - Perfex Inc.
13600 Industrial Park Blvd.
PO Box 1551
Minneapolis, MN 55440

Weben Jarco, Inc.
(Hot Water Systems)
4007 Platinum Way
Dallas, TX 75237
1-800-527-6449

ECCI
(Evaporative Cooling)
PO Box 29734
Dallas, TX 75229
(214) 484-0381

Carrier Corporation
(Chillers)
Syracuse, NY 13221

Notes

Trane Company
Clarksville, TN 37040

The Marley Cooling Tower Company
(Cooling Towers)
5800 Foxridge Dr.
Mission, KS 66202 (913) 362-1818

Roberts - Gordon Appliance Corporation
(Radiant Heaters)
PO Box 44
1250 William St.
Buffalo, NY 14240
(716) 852-4400

Air Compressors:

Ingersoll Rand Company
5510 77 Center Dr.
PO Box 241154
Charlotte, NC 28224

Gardner-Denver Company

Motors:

GE Company
Motor Business Group
1 River Rd.
Schenectady, NY 12345

Variable Speed Drives:

York International
Applied Systems
PO Box 1592-361P
York, PA 17405-1592
(717) 771-7890

ABB Industrial Systems, Inc.
Standard Drives Division
88 Marsh Hill Rd.
Orange, CT 06477

Allen Bradley
Drives Division
Ceadarburg, WI 53012-0005

Enercon Data Corporation
7464 W. 78th St.
Minneapolis, MN 55435
(612) 829-1900

Belts:

The Gates Rubber Company
990 S. Broadway
PO box 5887
Denver, CO 80217
(303) 744-1911

Additional Resources

1. Thumann, Albert, Handbook of Energy Audits, Association of Energy Engineers, Atlanta, GA (several editions).

2. Industrial Market and Energy Management Guide, American Consulting Engineering Council, Research and Management Foundation, 1987.

3. Energy Conservation Program Guide for Industry and Commerce, NBS Handbook 115 and Supplement, U.S. Department of Commerce and Federal Administration, U.S. Government Printing Office, 1975.

4. Mark's Handbook of Mechanical Engineering, Baumeister (Ed.), McGraw-Hill, Eight Edition, 1978.

5. ASHRAE Handbooks, Fundamentals, Systems, Equipment, Application, HVAC and Refrigeration Volumes, American Society of Heating, Refrigeration and Air Conditioning Engineers.

Notes

APPENDIX D

DEFINITIONS

Abrasive Blasting:	Refers to any paint stripping technique that utilizes grit and other abrasives.
Air/Fuel Ratio:	The Ratio of combustion air to fuel supplied to the burner.
Aleophilic:	A term that refers to mediums that attract oil.
Assessment:	Industrial assessments are an in-depth review of existing operations to increase efficiency of the operation through pollution prevention and energy conservation.
Barrels:	The portion of an injection molding machine through which the molten plastic is forced by the piston.
Baseline Year:	The year that pollution prevention gains are measured from.
Block:	A division of billing based on usage. The total block amount of use is divided into blocks of different price per unit of use.
BOD:	Biochemical Oxygen Demand.
Boiler:	A device where energy extracted from some type of fuel is converted into heat which is distributed to needed places to do useful work
Broaching:	A process in which internal surfaces are finished.
Brownstock Washing:	A cleaning stage applied to the brown pulp produced by the pulping stage.
British Thermal Unit (BTU or Therm):	British thermal unit. It is the amount of energy to increase or lower one pound of water one degree Fahrenheit.
Capacitance (Farad):	The farad is the electrostatic capacitance that will hold a charge at a pressure of one volt.
CCF:	One hundred cubic feet of gas. (Typically 1 Therm = 1.02 CCF)
Cellulose Fiber:	The desired pulp content after the pulping process.
Celsius:	A metric unit for temperature measurement.
Chilled water:	Water in the evaporator that is cooled when heat is removed to vaporize the refrigerant.
Climate:	All climates
Coefficient of Performance:	The ratio between thermal energy out of and electrical energy into the system.
Cogeneration:	The simultaneous production of electric power and use of thermal energy from a common fuel source.
Collector:	Panels for collecting sun's radiation and transforming it into electricity.
Combustion:	A release of heat energy through the process of oxidation
Commingled:	Describes materials that are mixed (i.e. not separated by composition).
Condensate:	The hot water condensed from cooled steam.
Condenser:	The unit on the chiller in which heat is transferred out of the refrigerant. Cool condensing water flows over the tubes containing a vaporized refrigerant in a tube-and-shell heat exchanger. As the refrigerant cools, it condenses into a liquid and releases heat to the condensing water.

Notes

Condensing Water:	Water that has been cooled in a cooling tower that is used to condense vaporized refrigerant in the condenser.
Constant:	Multiplier used in computing electric meter reading.
Conveyorized:	Describes equipment that is continuous.
Cooling tower:	A device to dissipate heat by evaporation of water which is trickling from different levels of the tower.
Current (Ampere):	The ampere, the rate of flow of a unvarying electric current.
CVD:	Chemical Vapor Deposition
Degree Day:	Mean daily temperature subtracted from 65 used to realistically measure heating requirements from one month to another
Degree Heating:	A measure relating ambient temperature to heating energy required. If the outside temperature is 1 degree below the base temperature in the plant for 1 hour then that represents 1 degree heating hour.
DEHP:	Diethylhexylphthalate
Delignification:	An extended pulping process that can lower contamination in the pulp.
Demand:	Highest amount of electricity used in 15-30 minute periods during any one-month. Power companies must have the generating capacity to meet the demands of their customers during these peak period, otherwise the result would be blackouts.
Demand-side Management Strategy:	Strategic energy conservation.
Dewatering:	Refers to any process designed to remove water from the waste sludge.
Digestion Liquor:	The liquid that the pulp is processed in.
Dioxins:	Are environmentally detrimental chemical compounds composed of identical carbon-oxygen framework.
Drag-out:	The fluid unintentionally removed from a bath while removing a part.
Duty Cycle:	Controlled interruption of a piece of equipment's operation that is within its operating band.
Economizer:	Air-to-liquid heat exchangers
Electrodeposited Materials:	Materials deposited by the electroplating process.
Energy (Joule):	The joule is the energy conveyed by one watt during one second; the kilowatt hour (kWh) is one kilowatt flowing for one hour.
Energy Conservation:	The use of any reasonable mechanism to successfully reduce consumption in a facility.
Enthalpy:	A measure of the heat content of a media, reflecting moisture content and temperature.
Evaporator:	The unit on the chiller in which heat is transferred to the refrigerant. Warm water flows over tubes containing a liquid refrigerant in a tube-and-shell heat exchanger. Heat is extracted from the water as the refrigerant vaporizes and the temperature of the water is reduced to the desired chilled water temperature.

Notes

Firing Rate:	As the load on a boiler varies, the amount of fuel supplied to the boiler varies in order to match the load.
Flash Rusting:	Occurs on some materials if water is allowed to sit on them, and can contaminate coatings.
Flashing:	Pressurized condensate will change phase into steam if the pressure is suddenly reduced.
Fossil Fuel:	Fuel (natural gas, coal, oil etc.) coming from the earth that was formed as a result of decomposition of vegetation or animal matter.
Fuel to Steam Efficiency:	A measure of the overall efficiency of a boiler. It accounts for radiation and convection losses.
Gloss Retention:	A measure of the amount of shine a paint maintains after time.
HAP:	Hazardous Air Pollutant
HCFC:	Hydrochlorofluorocarbons
Heat Exchanger:	A device used to recover heat from one source and transfer this heat to another source without mixing the two sources.
Heat Pipe:	A counterflow air-to-air heat exchanger.
Heat transfer coefficient:	A parameter used in determining heat loss.
HM:	Hazardous Material
HMCC:	Hazardous Material Control Center.
Hogged-fuel Boilers:	A Boiler that burns waste materials for energy recovery.
Hot gas:	The refrigerant vapor discharged by the compressor. This vapor is superheated; the temperature of the vapor has been raised above that which normally occurs at a particular pressure.
Humidity:	Water vapor within a given space.
HVAC:	Heating, ventilation and air conditioning.
HVLP:	High Volume, Low Pressure
Infiltration:	Air flowing inward through a wall, window, door or a crack.
Insulation:	A material having a relatively high resistance to heat flow, principally used to retard the flow of heat. This ability is measured as “R” factor. The higher the factor the higher the ability to insulate.
Interruptible:	Large users of electricity or gas who are able to turn off a portion of their use during peak periods are rewarded by lower rates. The users interrupt their service, thus the name interruptible service.
Kappa Factor:	Is designated by the amount of chlorine in the first bleaching stage.
Kilowatt (kW):	1000 Watts, unit of power.
Kilowatt Hour:	Unit of electrical power consumption. It is one kilowatt used for one hour.
Knots:	Undesired wood that where not properly pulped, including uncooked chips, over thick chips, and irregularly sized pieces.
Lathe:	A piece of metal working equipment that holds a rapidly spinning work piece for processing.
Lingnin Molecules:	The waste produced throughout the pulping process.

Notes

Load Shedding:	A scheduled shutdown of equipment to conserve energy and reduce demand.
LP Gas:	Liquid petroleum gas. This fuel is distributed in pressurized cylinders in liquid state and by releasing it is converted into gas in which form it is burnt.
Load Scheduling:	An internal clock programmed by the user to start and stop electric loads on selected days at particular times.
Lumen:	A unit for quantitative measure of light.
Makeready:	The stage in printing operations when the plates are prepared and all adjustments are made.
Make-up Air:	Air forced into the area equal to the air lost through exhaust vents.
Mar Resistance:	A measure of the ability of a paint to withstand abrasions.
Masking:	The covering of areas that are not to be subject to painting or paint removal.
Material Balance:	Shows all the materials that enter and leave a process.
MEK:	Methyl Ethyl Ketone
MIBK:	Methyl Isobutyl Ketone
MSDS:	Material Safety Data Sheets
ODC:	Ozone Depleting Compound
ODS:	Ozone Depleting Substances
Optimum Start:	The load scheduling program, when applied to heating or cooling loads, is modified to follow temperature changes outside the building.
Paint Booth:	A specialized vented area set aside for painting.
Photoprocessing Chemicals	Includes developer, fixer, and rinse water that are essential to developing photos.
PMB:	Plastic Media Blasting
POL:	Petroleum, Oil, Lubricant
Pollution Prevention:	Pollution prevention means "source reduction," as defined under the Pollution Prevention Act, and other practices that reduce or eliminate the creation of pollutants through: • increased efficiency in the use of raw materials, energy, water, or other resources, or • protection of natural resources by conservation.
Power (Watt):	The watt is the power generated by a steady current of one ampere at a pressure of one volt. The kilowatt (kW) = 1,000 watts. One horsepower = 746 watts.
Power Factor:	Ratio between usable power supplied and usable power with inductive loads.
Presensitized Plates	A type of plate used in printing and producing much less waste than typical etched plates.
Pressure (Volt):	The volt, the pressure or potential difference required to produce one ampere in a resistance of one ohm. 1 kilovolt (kV) = 1,000 volts.
Primer:	Is a coating applied to prepare the substrate before the application of paint.
PVD:	Physical Vapor Deposition
Quantity (Coulomb):	The quantity of electricity conveyed by one ampere flowing for one second. Ampere hour, one ampere for one hour.

Notes

Rancidity:	Is the odor produced by contaminated metal working fluids due to bacterial growth.
Ratchet:	The peak demand ratchet during a billing period is kept as the peak billing demand for succeeding billing periods until either the ratchet is reset to zero or a higher peak demand sets the ratchet to a higher peak value.
Recuperator:	An air-to-air heat exchanger.
Recycling:	Recycling means the diversion of materials from the solid waste stream and the beneficial use of such materials. Recycling is further defined as the process by which materials otherwise destined for disposal are collected, reprocessed or remanufactured, and reused.
Regenerative Unit:	A rotary air-to-air heat exchanger also known as a heat wheel.
Residence Time:	The amount of time a part stays in a particular bath.
R-value:	Measure of resistance to heat transfer in Btu/hr-ft^2-°F
Savealls:	A system used to recover fiber from the water used in pulp drying and paper making operations.
SCF:	Supercritical fluids undergo a phase transition from a gas or liquid phase to become supercritical fluids.
Secondary Fiber:	Is fiber produced from recycled paper or paperboard that is combined with the wood chips before pulping.
Service Charge:	A fixed fee for providing service from a utility company.
Sheet-fed Press:	A press that prints on single sheets of paper.
Shell and Tube Heat Exchanger:	A liquid-to-liquid heat exchanger.
Shop:	Area of operation, process line, and/or area which conducts the same type of operation.
SOP:	Standard Operation Procedures
Source Reduction:	Pollution Prevention Act defines "source reduction" to mean any practice that: • reduces the amount of any hazardous substance, pollutant, or contaminant entering any waste stream or otherwise released into the environment (including fugitive emissions) prior to recycling, treatment, or disposal; and • reduces the hazards to public health and the environment associated with the release of such substances, pollutants, or contaminants Under the Pollution Prevention Act, recycling, energy recovery, treatment and disposal are not included within the definition of pollution prevention. Some practices commonly described as "in-process recycling" may qualify as pollution prevention.
Stack Gases:	Combustion gases that heat the water and are then exhausted out the stack.
Straight Oil:	A category of oil that includes all oils that are not water based.
Stratification:	An increasing air temperature gradient between the floor and the ceiling in an enclosed area.
Substrate:	The material to be coated by any of the plating methods.
Tails:	Streaks that appear in the extremities of paint.
TCLP:	Toxicity Characteristics Leaching Procedure.

Notes

Terpenes:	A categorization of semi-aqueous cleaners.
Therm:	A measurement of heat, equivalent to 100,000 Btu.
Thermal Efficiency:	A measure of effectiveness of the heat exchanger. It does not account for radiation and convection losses.
Tramp Oils:	Include all oils that contaminate an area or another fluid.
Treatment:	The processing of materials to concentrate pollutants, reduce toxicity, or reduce the volume of waste materials. The most common example of this is wastewater treatment.
VOC:	Volatile Organic Compounds
Volt - Ampere:	The product of the rated load amperes and the rated range of regulation in kilovolts (kVA).
Water Curtains:	Are utilized to minimize overspray and fumes in a thermal spray technology process.
Web-fed Press:	A press that prints on rolls of paper that are later cut to the appropriate size.
Wet-bulb Temperature:	The temperature indicated by a thermometer for which the bulb is covered by a film of water. As the film of water evaporates, the bulb is cooled. High wet-bulb temperatures correspond to higher air saturation conditions. For example, dry air has the ability to absorb more moisture than humid air resulting in a lower, wet-bulb temperature.
Wrap:	The paint that coats the non-facing surfaces.

Notes

APPENDIX E
ENERGY CONSERVATION OPPORTUNITY CASE STUDIES

Information in this appendix discusses specific energy conservation opportunities in detail. This is done to illustrate how to calculate energy savings and cost savings for various opportunities. The assessment team should evaluate carefully, the specifics of the facility or operation being assessed to determine if the measures presented here can be implemented. The team should also evaluate the opportunity using facility specific information. The following case studies present only a few of the available energy conservation opportunities.

1. Implement Periodic Inspection and Adjustment of Combustion in a Natural Gas Fired Boiler
2. Implement Periodic Inspection and Adjustment of Combustion in an Oil Fired Boiler
3. Energy Savings from Installation of Ceiling Fans
4. Install Infrared Radiant Heaters
5. Repair Compressed Air Leaks
6. Install Low Pressure Blowers to Reduce Compressed Air Use

Notes

THIS PAGE INTENTIONALLY LEFT BLANK

Notes

CASE STUDY #1: IMPLEMENT PERIODIC INSPECTION AND ADJUSTMENT OF COMBUSTION IN A NATURAL GAS FIRED BOILER

Current Practice and Observations

During the audit, the exhaust from the boilers was analyzed. This analysis revealed excess oxygen levels which results in unnecessary energy consumption.

Recommended Action

Many factors including environmental considerations, cleanliness, quality of fuel, etc. contribute to the efficient combustion of fuels in boilers. It is therefore necessary to carefully monitor the performance of boilers and tune the air/fuel ratio quite often. Best performance is obtained by the installation of an automatic oxygen trim system that will automatically adjust the combustion to changing conditions. With the relatively modest amounts spent last year on fuel for these boilers, the expense of a trim system on each boiler could not be justified. However, it is recommended that the portable flue gas analyzer be used in a rigorous program of weekly boiler inspection and adjustment for the two boilers used in this plant.

Anticipated Savings

The optimum amount of O_2 in the flue gas of a natural gas-fired boiler is 2.0%, which corresponds to 10% excess air as shown in Exhibit E.1. Measurements taken from the stack on the 300 HP boiler gave a temperature of 400°F and a percentage of oxygen at 6.2%. By controlling combustion the lean mixture could be brought to 10% excess air or an excess O_2 level of 2%. This could provide a possible fuel savings of 3%.

The 300 HP natural gas boiler is used both for production and heating. It is estimated that 100% of the natural gas is consumed in the boiler.

Therefore the total savings would be:

Savings in Fuel (therms/yr.) = (% burned in boiler) x (annual therms/yr.) x (% possible fuel savings)

= 1.0 x (56,787 therms/yr) x (0.02)

= 1,136 therms/yr

Savings in Dollars ($/yr): = (therms Saved/yr) x (cost/therm)

= 1,136 therms/yr x $0.644/therm

= $732/yr

Implementation

It is recommended that the facility purchase a portable flue gas analyzer and institute a program of monthly boiler inspection and adjustment of the boilers used in the plant. The cost of such an analyzer is about $500 and the inspection and the current maintenance personnel could perform the burner adjustment. The simple payback is:

$500 cost / $732 = 8.2 months

Notes

Exhibit E.1: Natural Gas Fuel Savings[1]

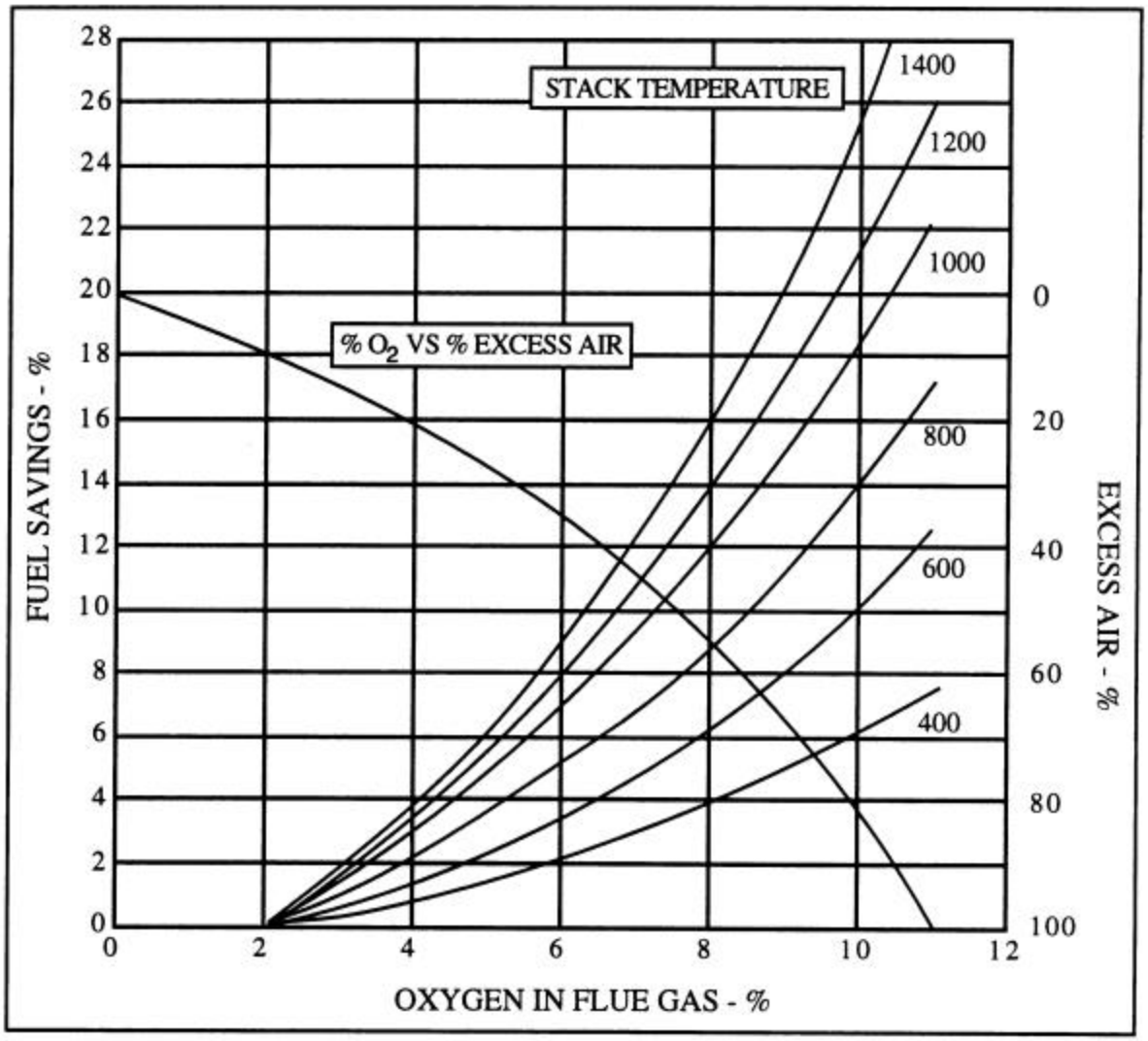

Note: Fuel savings determined by these curves reflect the following approximation. The improvement in efficiency of radiant and combination radiant and convective heaters or boilers without air pre-heaters that can be realized by reducing excess air is 1.5 times the apparent efficiency improvement from air reduction alone due to the accompanying decrease in flue gas temperature.

As an example, for a stack temperature of 600°F and O_2 in flue gas of 6%, the fuel saving would be 3%. If desired, excess air may be determined as being 36%.

Notes

CASE STUDY #2: IMPLEMENT PERIODIC INSPECTION AND ADJUSTMENT OF COMBUSTION IN AN OIL FIRED BOILER

Current Practice and Observations

During an audit, flue gas samples were taken from the boiler. The boiler was operating with too much excess air resulting in unnecessary fuel consumption.

Recommended Action

Many factors including environmental considerations, cleanliness, quality of fuel, etc. contribute to the efficient combustion of fuels in boilers. It is therefore necessary to carefully monitor the performance of boilers and tune the air/fuel ratio quite often. Best performance is obtained by the installation of an automatic oxygen trim system that will automatically adjust the combustion to changing conditions. With the relatively modest amounts spent last year on fuel for these boilers, the expense of a trim system on each boiler could not be justified. However, it is recommended that the portable flue gas analyzer be used in a rigorous program of weekly boiler inspection and adjustment for the two boilers used in this plant.

Anticipated Savings

The optimum amount of O_2 in the flue gas of an fuel oil-fired boiler is 3.7%, which corresponds to 20% excess air. The boiler measured had an O_2 level of 8.5 % and a stack temperature of 400°F. From Exhibit E.2, using the measured stack temperature and excess oxygen for the boiler indicates a possible fuel saving of nearly 4.0% for the oil fired boiler.

It is assumed that the boiler uses all of the fuel oil consumed during the year. The possible savings are then the sum of the products of amount used and percent saved.

Energy Savings = (10,339 gallons/yr.) x (0.04 savings.) = 414 gallons/yr.

Therefore the total cost savings would be:

Cost Savings = (414 gallons/yr.) x ($1.03/gallon) = $426/yr

Total Annual Savings = $426

Implementation

It is recommended that you purchase a portable flue gas analyzer and institute a program of monthly boiler inspection and adjustment of the boilers used in the plant. The cost of such an analyzer is about $500 and the inspection and the current maintenance personnel could perform the burner adjustment. The simple payback period will then be:

$500 implementation cost / $426 savings/yr. = 1.2 years

Simple payback=1.2 yrs.

Notes

Exhibit E.2: Liquid Petroleum Fuel Savings[1]

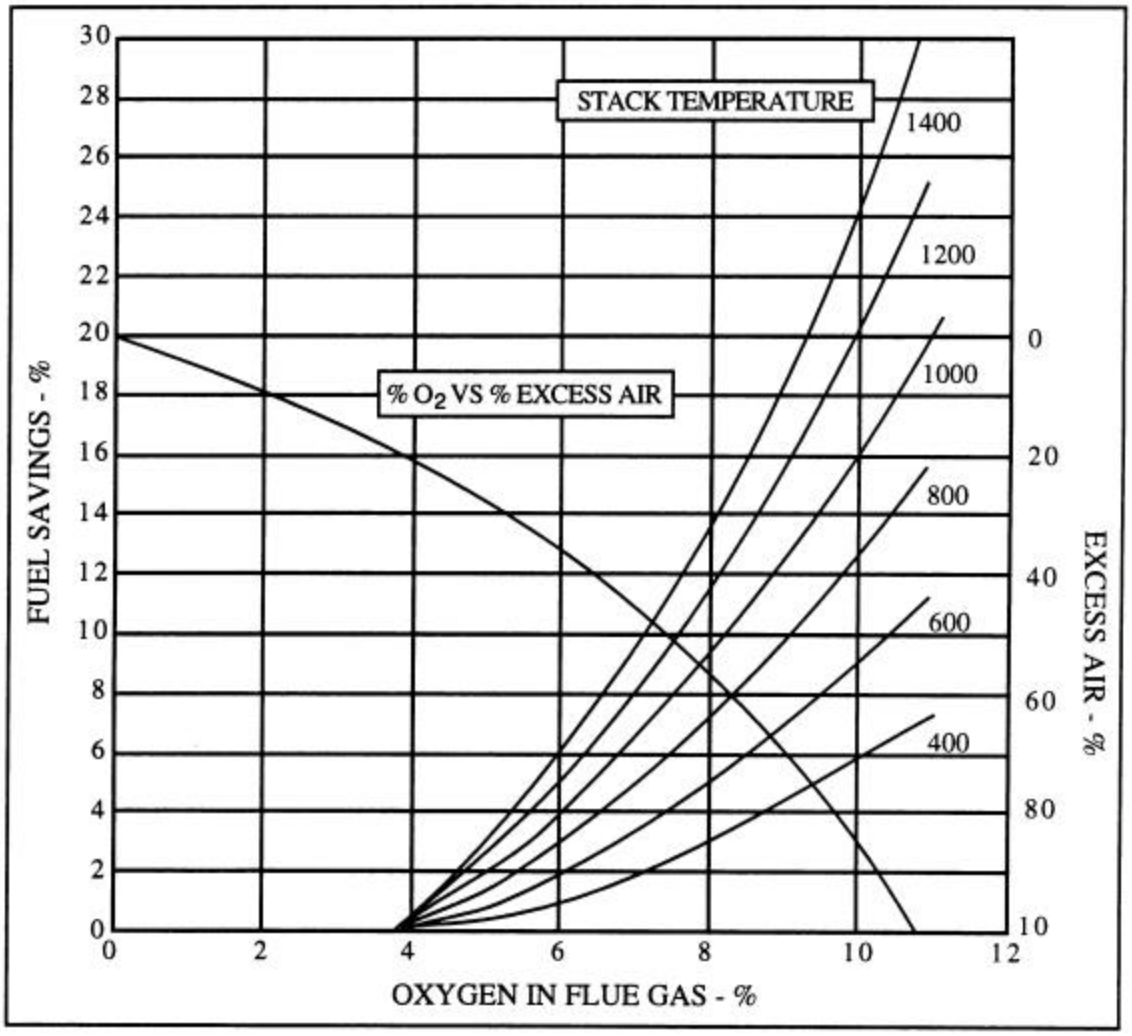

Note: Fuel savings determined by these curves reflect the following approximation. The improvement in efficiency of radiant and combination radiant and convective heaters or boilers without air pre-heaters that can be realized by reducing excess air is 1.5 times the apparent efficiency improvement from air reduction. This is due to the decrease in flue gas temperature that must follow increased air input.

As an example, for a stack temperature of 800°F and O_2 in flue gas of 6%, the fuel savings would be 3%. If desired, excess air may be determined as being 36%.

Notes

CASE STUDY #3: ENERGY SAVING FROM INSTALLATION OF CEILING FANS

In calculating the energy and cost savings of this implementation it is first necessary to calculate the Energy Savings of the fans ($E_{S,F}$).

$$E_{S,F} = \{[(U \times A)_W + (U \times A)_I \times DH_{AT} + (U \times A)_C \times DH_{CT} - [(U \times A)_W + (U \times A)_I + (U \times A)_C] \times DH_{PT}\} / EFF$$

where

U = heat transfer coefficient

A = area

DH_{AT} = annual heating degree hours at current average temperature

DH_{CT} = annual heating degree hours at ceiling temperature

DH_{PT} = annual heating degree hours at proposed mixed temperature

EFF = efficiency of the heating system

subscripts

W = of the walls, windows, and doors

I = of the infiltration

C = of ceiling/roof

The amount of additional energy consumed by the destratification fans is given by

$$E_{DF} = \text{Number of Fans} \times W \times OH$$

where

W= wattage of each fan

OH = operating hours during the heating season

The total annual energy savings (ES) can now be found by

$$ES = E_{S,F} - E_{DF}$$

Using this information, it is simple to calculate the annual cost savings (CS) of this implementation.

$$CS = (E_{S,F} \times \text{Fuel Cost}) - (E_{DF} \times \text{Fuel Cost})$$

Finally a simple payback can be found using

$$\text{Payback} = \frac{\text{Number of Fans (Cost per Fan Installation Cost)}}{CS}$$

A case study for one plant yielded a potential energy savings of 307.59 MMBtu/yr with cost savings of $1,643.20. This measure, which involved 19 fans, had an implementation cost of $3,420. The suggested fan type was the 60" model, estimated to cover about 2,150 ft^2, with a price of approximately $90 per unit and an installation cost of $90, resulting in a total of $180 per fan. The simple payback period was 2.08 years. The typical payback period for the installation of destratification fans is approximately 2 years.

Notes

THIS PAGE INTENTIONNALLY LEFT BLANK

Notes

CASE STUDY #4: INSTALL INFRARED RADIANT HEATERS

In calculating the energy and cost savings for using infrared radiant heaters the method differs according to the application of the system.

Comfort Heating

For the radiant comfort heating system, the method is quite simple. First calculate the amount of energy (E_{RH}) consumed by the infrared units.

$$E_{RH} = HL \times \text{Number of Units} \times PR \times OH$$

Where

HL = average heating load

PR = total power rating of each unit

OH = operating hours per year

Next, an estimate of the current energy usage for the convective heaters (E_{CH}) must be made. Then taking the difference in these two values, the total annual energy savings can be determined.

$$ES = E_{CH} - E_{RH}$$

Multiplying this number by the cost of fuel yields the total cost savings for the year.

$$CS = ES \times \text{Fuel Cost}$$

Or an alternate method for computing these savings is simply

$$ES = \text{Current Usage} \times \left(1 \cdot \frac{\text{Eff}_c}{\text{Eff}_R}\right)$$

and

$$CS = ES \times \text{Fuel Cost}$$

where

EFF_C = efficiency of the convective system

EFF_R = efficiency of the radiant system

Note that although this evaluation is generally valid, these savings are based on the efficiency of the systems, where in most cases the savings are determined by the cost of the fuel. This is especially true in the case where different energy sources are being considered, i.e. natural gas or electricity.

One study estimated a current energy use of 5,000 x 10 6 Btu/yr. Installation of 18 radiant heaters yielded an energy savings of 2,786 x 10 6 Btu/yr. and a cost savings of $10,406/yr. The implementation cost including piping and labor came to a total of $28,960 resulting in a payback period of 2.8 years.

Process heating

To find the savings for replacing a process unit with an infrared system, many more factors must be taken into account. For example, one case study involved replacing process ovens with infrared burners. The ovens were used to heat molds that in turn, baked cones. The first step in this savings estimation was to calculate the efficiency of the current ovens. This was accomplished by estimating the amount of energy (E_C) used to heat the product per year.

Notes

$$E_C = BS \times B \times OH \times [H_V + C_P \times (T_f - T_i)]$$

where

BS = average batch size

B = # of batches per hour

OH = operating hours per year

H_v = heat of vaporization of water (assuming batch is 100% water)

C_P = specific heat of water

T_f = final temperature of cone

T_i = initial temperature of batter

Once the total amount of energy consumed by the ovens (E_O) is obtained, the overall oven efficiency can be determined by

$$EFF_c = \frac{E_C}{E_0}$$

The heat transfer rates for the new and the old system were then found and compared. The convective heat transfer rate in the blue flame mode was approximated to be around 1.0 Btu/hr-ft 2 -deg. F based on the characteristics of the current ovens. The radiant heat transfer rate (UR) was found by using the following equation.

$$U_R = F \times a \times s \times \frac{T_1^4 - T_2^4}{T_g - T_m} = 1.3 \frac{BBtu}{hr\, ft_2 {}^\circ F}$$

where

F = radiation shape factor

a = absorptivity of the mold

σ = Boltzmann's constant

T_1 = radiant heater surface temperature

T_2 = mold surface temperature

T_g = gas temperature in the oven

T_m = mold temperature

Comparing these rates, U_R was found to be 30% larger than U_C, the convective coefficient. If there are 30% savings, the energy savings would be

ES = Total Gas used by Ovens x Percent Savings

and the cost savings

CS = ES x Cost of Natural Gas

Calculating the payback is simply

Payback = Implementation Costs / CS

where the implementation costs include equipment and installation.

The results of this study showed that there was a total energy savings of 5,440 MMBtu/yr and a total cost savings of $31,280/yr. For estimation purposes, it was assumed that 65% of the total gas use was consumed in order to obtain these approximations. The cost of implementation for each oven was $10,500. For all nine ovens the total implementation cost was $94,500. This data yields a payback period of 3.0 years.

Notes

Notes

THIS PAGE INTENTIONALLY LEFT BLANK

Notes

CASE STUDY #5: REPAIR COMPRESSED AIR LEAKS

Background

The cost of compressed air leaks is the energy cost to compress the volume of lost air from atmospheric pressure to the compressor operating pressure. The amount of lost air depends on the line pressure, the compressed air temperature at the point of the leak, the air temperature at the compressor inlet, and the estimated area of the leak. The leak area is based mainly upon sound and feeling the airflow from the leak. The detailed equations are given in Chapter 8. An alternative method to determine total losses due to air leaks is to measure the time between compressor cycles when all air operated equipment is shut off.

The plant utilizes one 75 hp compressor that operates 8,520 hrs/yr. Measurements taken during the site visit showed the compressor to continuously draw 77.7 hp. Approximately 24% of this load is lost to air leaks in the plant. The majority of the air leaks are due to open, unused lines. There are several plant locations where pneumatic machinery could be connected to the primary air line, but at the time of the site visit, no machines were connected. These open lines were typically found on or near I-beams. The terms "I-beam #1, #2, and #3" are used in the Exhibits of this opportunity to label the leaks. In order to allow for correct location of these open lines, a list of the terms and their approximate locations are given below:

Terms	Description
I-Beam #1	Leak located on I-beam near rotary automatic #2.
I-Beam #2	Leak located on I-beam near catalogue machine.
I-Beam #3	Leak located on hose attached to I-beam near Machine 6700.

Recommended Action

Leaks in compressed air lines should be repaired on a regular basis.

Anticipated Savings

Values for all factors affecting the cost of compressed air leaks were determined during the site visit, and are listed in Exhibits E.3. Because of long piping runs to the equipment, the compressed air temperature is estimated to be the same as room temperature.

Exhibit E.3: Condition of Pneumatic System at Time of Site Visit

Variable	
Air temperature at compressor inlet, F	92
Atmospheric pressure, psia	14.7
Compressor operating pressure, psig	115
Air temperature at the leak, F	72
Line pressure at the leak, psig	115
Compressor motor size, hp	75
Compressor motor efficiency	91.5%
Compressor type	Screw
Number of stages	1
Compressor operating hours, per year	8,520
Electric cost, per MMBtu	$14.05

Notes

Using these values, the volumetric flow rate, power lost due to leaks, energy lost and cost for leaks of various sizes were calculated specifically for the conditions at this plant. The results are shown in Exhibit E.4.

As Exhibit E.4 shows, the cost of compressed air leaks increases exponentially as the size of the leak increases. As part of a continuing program to find and repair compressed air leaks, the Exhibit can be referenced to estimate the cost of any leaks that might be found.

Exhibit E.4: Cost of Compressed Air Leaks At This Plant

Hole Diameter	Flow Rate *cfm*	Power Loss *hp*	Energy Lost *MMBty/yr*	Energy Cost *per year*
1/64	0.5	0.1	0.2	$31
1/32	1.8	0.4	8.7	$122
1/16	7.2	1.7	36.9	$518
1/8	29.0	6.9	149.7	$2,103
3/16	65.2	15.4	334.1	$4,694
1/4	115.8	27.4	594.4	$8,351
3/8	260.6	61.7	1,334.8	$18,805

The estimated energy savings and corresponding cost savings for the air leaks found during the site visit are listed in Exhibit E.5 below:

Exhibit E.5: Summary of Savings

Machine	Leak Diameter *in*	Power Loss *hp*	Energy Savings *MMBtu/yr*	Cost Savings *per year*
Cardboard Boxes Area	1/16	1.7	36.9	$518
Cardboard Boxes Area	1/16	1.7	36.9	$518
Hand Dye	1/16	1.7	36.9	$518
Straight Knife	1/8	6.9	149.7	$2,103
Web	1/16	1.7	36.9	$518
I-beam#1	1/16	1.7	36.9	$518
I-beam#2	1/16	1.7	36.9	$518
I-beam#3	1/16	1.7	36.9	$518
TOTALS		18.8	408.0	$5,729

From Exhibit E.5 above, the total estimated energy savings from repairing the air leaks are 408.0 MMBtu./yr. and the total cost savings are $5,730/yr.

Notes

Implementation Costs

In general, implementation of this opportunity involves any or all of the following:

1. Replacement of couplings and/or hoses;
2. Replacement of seals around filters;
3. Shutting off air flow during lunch or break periods; and
4. Repairing breaks in lines, etc.

Specific repairs and implementation costs for the leaks found during the site visit are given in Exhibit E.6 below.

Exhibit E.6: Implementation Costs

Machine	Repair Needed	Parts	Labor	Total Cost
Cardboard Box Area	Install shut-off valve	$50	$25	$75
Cardboard Box Area	Install shut-off valve	$50	$25	$75
Hand Dye	Install shut-off valve	$50	$25	$75
Straight Knife	Replace coupling	$2	$25	$27
Web	Change 0.5”tube	$9	$25	$34
I-beam#1	Install shut-off valve	$50	$25	$75
I-beam#2	Install shut-off valve	$50	$25	$75
I-beam #3	Replace coupling	$2	$25	$25
TOTALS		$263	$200	$463

Assuming that facility maintenance personnel can do this work, these leaks can be eliminated for approximately $460. Thus, the cost savings of $5,730 would pay for the implementation cost of $460 in about 1 month.

Notes

THIS PAGE INTENTIONALLY LEFT BLANK

Notes

CASE STUDY #6: INSTALL A LOW PRESSURE BLOWER TO REDUCE COMPRESSED AIR USE

Estimated Energy Savings = 428.7 MMBtu/y.r

Estimated Cost Savings = $5,720/yr.

Estimated Implementation Cost = $8,500

Simple Payback = 18 months

Recommended Action

A low-pressure blower should be installed to provide agitation air for 3 plating tanks. Use of low-pressure air from a blower, as compared to use of compressed air, would reduce electrical consumption by eliminating the current practice of compressing air and the expanding it back to the lower pressure.

Background

A 100 hp compressor is currently in use at this facility, and a significant amount of the power consumed by the compressor (31%) is used to provide air to agitate 3 plating tanks. This compressor produces compressed air at 117 psig, but less pressure is actually needed to provide effective agitation. The pressure and flow rate requirements for effective agitation are calculated from the following equations:

$$Q = AF \times A$$

and

$$P_a = (0.45 \times SD \times SG) + 0.75$$

where

Q = flow rate required for agitation, cfm

AF = agitation factor

A = surface area of agitation tanks, 63.5 sq. ft.

P_a= pressure required for agitation, psig

SD = depth of solution, 3 ft.

SG = specific gravity of water, 1.0

For agitation tanks containing water, the agitation factor is 1.0 cfm/sq. ft. The effective surface area of the tanks is 63.5 sq. ft. Thus, the flow rate required for agitation is calculated as follows:

$$Q = 1.0 \times 63.5 = 63.5\,cfm$$

The pressure required for effective tank agitation is calculated as follows:

$$P = 0.43 \times 3.0 \times 1.0 \times 0.75 = 2\,psig$$

Because of the difference between the pressure delivered by the compressor and the pressure required for effective tank agitation, the compressor is doing a large amount of unnecessary work. By implementing a blower that has a pressure output more closely matched to the agitation requirement, significant energy savings can be realized.

Notes

Anticipated Savings

Energy savings due to use of air at reduced pressure, *ES*, are estimated as follows[1]:

$$ES = (PC - PB) \times H \times C_1$$

where

PC = power consumed by compressor to agitate tank, hp

PB = power consumed by blower to agitate tank, hp

H = operating hours, 5,746 h/yr

C_1= conversion factor, 0.756 kW/hp

The volume of free air used for agitation V f at this plant as obtained from the plant personnel is 130 cfm. The power PC that is required to compress the volume of free air V_f needed for agitation from atmospheric pressure to the compressor discharge pressure can be calculated as follows[2]:

$$PC = \frac{P_i \times C_2 \times V_f \times \frac{k}{k-1} \times N \times C_3 \times \left[\left(\frac{P_o}{P_i} \right)^{\frac{k-1}{k \times N}} - 1 \right]}{E_{ac} \times E_{mc}}$$

where

P = inlet (atmospheric pressure), 14.7 psia

C_2= conversion constant, 144 in 2 /ft^2

V_f= volumetric flow rate of free air, 130 cfm

k = specific heat ration of air, 1.4 (no units)

N = number of stages, 1 stage

C_3 = conversion constant, 3.03 x 10-5 hp-min/ft-lb

P_o = pressure at the compressor outlet, 131.7 psia (117 psig)

E_{ac} = air compressor isentropic (adiabatic) efficiency, 82%

E_{ac} = 0.88 for single stage reciprocating compressors

E_{ac} = 0.75 for multi-stage reciprocating compressors

E_{ac} = 0.82 for rotary screw compressors

E_{ac} = 0.72 for sliding vane compressors

E_{ac} = 0.80 for single stage centrifugal compressors

E_{ac} = 0.70 for multi-stage centrifugal compressors

E_{mc} = compressor motor efficiency, 92% for a 100 hp motor

Thus, the power that is currently consumed by the compressor to provide air for tank agitation is calculated as follows:

Notes

$$PC = \frac{14.7 \times 144 \times 130 \times \frac{1.4}{0.4} \times 1 \times \left(3.03 \times 10^{-5}\right) \times \left[\left(\frac{131.7}{14.7}\right)^{\frac{0.4}{1.4 \times 1}} - 1\right]}{0.82 \times 0.92}$$

Similarly the power required by the blower to provide the same amount of air for agitation, PB, can be calculated as follows:

$$PB = \frac{P_i \times C_2 \times Q \times \frac{k}{k-1} \times N \times C_3 \times \left[\left(\frac{P_o}{P_i}\right)^{\frac{k-1}{k}} - 1\right]}{E_{ab} \times E_{mb}}$$

where

P_b = pressure at the blower outlet, 17.7 psia (3 psig). This value accounts for P_a plus losses in the air lines.

E_{ab} = blower isentropic (adiabatic) efficiency, 60%

E_{ab} = 0.70 for turbo blowers

E_{ab}= 0.62 for Roots blowers[1]

E_{mb} = compressor motor efficiency, 92% for a 100 hp motor

Thus, the power that would be consumed by the blower to provide air for tank agitation is estimated as follows:

$$PB = \frac{14.7 \times 144 \times 130 \times \frac{1.4}{0.4} \times 1 \times \left(3.03 \times 10^{-5}\right) \times \left[\left(\frac{17.7}{14.7}\right)^{\frac{0.4}{1.4}} - 1\right]}{0.60 \times 0.80}$$

For this facility, the energy savings, *ES*, that can be realized by installing a blower to provide agitation air for the three tanks are estimated as follows:

$$ES = (33.7 - 1.6) \times 5746 \times 0.746 = 137{,}597 \frac{kWh}{yr} = 469.7 \frac{MMBtu}{yr}$$

The annual cost savings, *CS*, can be estimated as follows:

$$CS = ES \times \text{unit cost of elecricity}$$

$$CS = \left(469.7 \frac{MMBtu}{yr}\right) \times \left(\frac{\$13.34}{MMBtu}\right) = 6{,}265\,\$/yr$$

Implementation Cost

Implementation of this opportunity involves purchase and installation of a low pressure blower and corresponding controls. The purchase price for a blower that will provide 3 psig air at a flow of 63.5 cfm, including controls, is estimated as $7,500. The installation cost is estimated as $1,000, including

Notes

modifications to tanks described below, giving a total implementation cost of $8,500. Thus, the cost savings of $5,720/yr. would have a simple payback of about 18 months.

In order for a 3 psig blower to deliver 63.5 cfm of air, the size of the air outlets in the tanks may have to be modified. Assuming that there are 12 total outlets (4 outlets per tank), the required outlet diameter is calculated from the equation for unchoked flow (less than the speed of sound) as follows:

$$D = \sqrt{\frac{4 \times Q \times \sqrt{T_l + 460}}{NL \times C_5 \times C_6 \times C_7 \times C_{db} \times \boldsymbol{p} \times (T_l + 460) \times \sqrt{\left(\frac{P_l}{P_i}\right)^{\frac{2\times(k-1)}{k}} - \left(\frac{P_l}{P_i}\right)^{\frac{k-1}{k}}}}}$$

where

T = average line temperature, °F
NL = number of outlets used for agitation, 12

C_5 = conversion constant, 60 sec/min

C_6 = conversion constant, 1/144 in 2 /ft 2

C_7= isentropic subsonic volumetric flow constant, 109.61 ft/sec-°R0.5

C_{db} = coefficient of discharge for subsonic flow through a square edged orifice, 0.6

p = Pythagorean constant, 3.141592

T_i = temperature of the air at the compressor inlet, 101°F

P_1 = line pressure at the agitation tanks, 17.7 psia

Thus, the required diameter of the air outlets is calculated as follows:

$$D = \sqrt{\frac{4 \times 63.5 \times \sqrt{75 + 460}}{12 \times 60 \times \frac{1}{144} \times 109.61 \times 0.6 \times \boldsymbol{p} \times (101 + 460) \times \sqrt{\left(\frac{17.7}{14.7}\right)^{\frac{2\times 0.4}{1.4}} - \left(\frac{17.7}{14.7}\right)^{\frac{0.4}{1.4}}}}}$$

Therefore, if the current diameter of the air outlets is not equal to 0.20 inches, the outlets should be enlarged.

---

1. From Serfilco '91-'92 Catalog "U" p. 118.
2. Compressed Air and Gas Handbook, 1961.
3. Chapters 10 and 11, Compressed Air and Gas Handbook, Fifth Edition, Compressed Air and Gas Institute, New Jersey, 1989.

Notes

APPENDIX F

POLLUTION PREVENTION OPPORTUNITY CASE STUDIES

Information in this appendix discusses specific pollution prevention opportunities. This is done to illustrate how to calculate waste reduction and cost savings for various opportunities. The assessment team should evaluate carefully, the specifics of the facility or operation being assessed to determine if the measures presented here can be implemented. The team should also evaluate the opportunity using facility specific information. The following case studies present a few of the available pollution prevention opportunities.

1. Construction and Demolition Waste Recycling
2. Packaging Reuse
3. Oil Analysis Program
4. Maintenance Fluid Recycling
5. Metal Working Fluid Substitution
6. Use of Automated Aqueous Cleaner
7. Recycling of Cleaner Through Filtration
8. Proper Rinsing Set-Up for Chemical Etching
9. Waste Reduction in the Chromate Conversion Process
10. Plating Process Bath Maintenance
11. Closed-Loop Plating Bath Recycling Process
12. Water-Borne Paint as a Substitute for Solvent-Based Coatings
13. High Velocity Low Pressure (HVLP) Paint System
14. Replacing Chemical Stripping with Plastic Media Blasting
15. White Water and Fiber Reuse in Pulp and Paper Manufacturing
16. Chemical Substitution in Pulp and Paper Manufacturing
17. On-Site Ink Recycling
18. Solvent Reduction in Commercial Printing Industry

Notes

THIS PAGE INTENTIONALLY LEFT BLANK

Notes

CASE STUDY #1: CONSTRUCTION AND DEMOLITION WASTE RECYCLING

Current Practice and Observations

An operator in California owns a one-story fenced off wood frame building with floor dimensions of approximately 60' x 135' that is slated for demolition. It was constructed in 1942 as a "temporary" structure. The building served as a warehouse with office space added to a portion of the interior at a later date. The building was constructed almost entirely of wood, with wood siding, wood flooring on concrete supports, and wood slat roofing boards covered with a recent re-roof of asphalt shingles.

Recommended Action

Utilize a deconstruction and salvaging company to dismantle the building to salvage and sell the wood and other construction materials. Separate materials by type, size and quality within the premise of the fence, and utilize the area as an ad-hoc lumberyard. Advertise the lumber as old growth, in order to receive the most money for it.

Anticipated Savings

Exhibit F.1 presents the economic analysis of the recommended action.

Exhibit F.1: Cost Analysis for a Demolition Waste Recycling Program

Item	Costs
Equipment and Hauling	$11,983
On-Site Labor	$33,053
Administrative	$12,604
TOTAL	$57,640
Items	**Savings**
On-Site Wood Sale	$30,155
National Park Service Grant	$15,000*
Lumber Sold Off-Site	$13,500
Greater Demolition Contract Give-Back	$16,800**
TOTAL	**$75,455**
Net Profit ($75,455 - $57,640)	**$17,815**

* Grant was provided by the National Parks Service to foster the hand deconstruction project and help develop future projects of this kind.

** This was the savings estimated by the contractor for not having to demolish the building.

Implementation

The deconstruction and salvaging company was able to recover approximately 87 percent of the wood contained within the building. The other 13 percent of the wood was found to be unusable or degraded to recycling quality during the dismantling of the building. The surrounding fenced-off area served as a lumberyard, which enabled the crew to sort and stack materials according to size and type. This fostered the on-site sale of over half the lumber recovered from the building. Beyond generating immediate revenues and allowing the community to purchase desirable materials, it reduced shipping costs. The price of the wood ranged between $0.25 per board foot for roof planking to $1.50 per board foot for the douglas fir flooring.

Notes

The majority of the wood sold for around $1.00 per board foot. The entire deconstruction took four weeks, and left a cleaned vacant lot.

This case study was adapted from: "Presidio of San Francisco, Building 901." Construction and Demolition Recycling Program. http://www.ciwmb.ca.gov/mrt/cnstdemo/casestud/presido/case2.htm.

Notes

CASE STUDY #2: PACKAGING REUSE

Current Practice and Observations

Before early 1990, most of a Michigan based retailers 17 facilities used polystyrene "peanuts" as packaging material to ship merchandise to its customers. Although the "peanuts" effectively protected many fragile items during shipping, some customers viewed the polystyrene packaging material as environmental unsound.

Recommended Action

Purchase a large durable paper shedder for each of the 17 facilities. Shred office paper waste at each facility for packaging.

Exhibit F.2 below presents the economic comparison of the current operation to the recommended action.

Exhibit F.2: Monthly Operating Cost Comparison for Polystyrene Packaging Peanuts and Shredded Paper Packaging

Purchased Packaging Costs:	Polystyrene Peanuts	Shredded Paper
Equipment and Supplies	$3,340	$0
Amortized Costs:	$0	$0
Labor Costs:	$0	$1,694
Utility Costs:	$23	$27
Total Costs:	$3,363	$1,901
Total Savings:		**$1,462 per month**

Implementation

The retailer implemented a plan in which the paper is collected from all stores, shredded, and is sent to a central warehouse where it is redistributed to individual facilities. Shredding dramatically lowered packaging costs by approximately 43 percent, and has saved the retailer approximately $17,500 each year. In an effort to generate additional revenue, plans are to shred and sell approximately 27 percent more office paper than is needed. The excess shredded material, if sold at a price equivalent to what was previously paid for shredded packaging material, could generate as much as $10,900 more.

This case study was adapted from: "Case Study: Hudson's Department Stores Outfit Themselves with Waste Reduction." Enviro$ense. http://es.epa.gov/techinfo/case/michigan/mich-cs3.html.

Notes

THIS PAGE INTENTIONALLY LEFT BLANK

Notes

CASE STUDY #3: OIL ANALYSIS PROGRAM

Current Practice and Observations

At a facility in New Jersey various shops, including the main garage, change the oil in equipment and fleet vehicles. Oil changes are preformed according to strict maintenance schedules rather than on an as needed basis. Many machines and vehicles have the oil changed four times a year.

Recommended Action

Purchase and install oil analysis equipment at the main garage. Evaluate oil quality including viscosity, total base number (a measure of the oil's ability to neutralize acids), and the concentration of some metal ions (e.g., calcium, magnesium, phosphorus, sodium, and zinc). Only change oil when tests indicate that it is needed. Other facility shops should send their oil samples to the main garage for testing before performing routine service work.

Anticipated Savings

Changing the oil is a time, labor, and costly process, therefore reducing the number of times oil is changed can drastically reduce costs as well as environmental impact. The following economic comparison is made on a conservative set of assumptions. These assumptions are listed below.

- 20 drums of oil a year are used with the old system.
- Oil is $200 per drum.
- Oil analysis equipment will reduce oil change frequency by 50 percent.
- 1 PC-based unit will be purchased to analyze the oil.
- 65 filters are changed per year with the old system.
- Oil disposal costs $0.22 per pound.
- Filter disposal costs $0.58 per pound.

Exhibit F.3 presents an economic comparison of the current operations to the recommended action.

Exhibit F.3: Economic Comparison of Maintenance Schedule versus Oil Analysis Programs

Annual Cost of Current Practice:		**Capital Project Costs:**		**Annual Project Costs:**	
Materials:		**Materials:**		**Materials:**	
Oil:	$4,000	Equipment:	$8,795	Oil:	$2,000
Filters:	$1,560			Filters:	$780
Disposal:				**Disposal:**	
Oil Disposal:	$2,057			Oil Disposal:	$1,029
Filter Disposal:	$151			Filter Disposal:	$75
TOTAL:	**$7,768**	**TOTAL:**	**$8,795**	**TOTAL:**	**$3,884**

Expected Annual Savings: $3,884

Estimated Payback Period: 2.2 years

Notes

Implementation

The oil analysis equipment saved the facility thousands of dollars, and paid for itself in under two and a half years. The equipment significantly decreased the volume of oil and number of filters purchased, oil waste, oil filter waste, and their related costs.

This case study was adapted from: "Pollution Prevention Plan." U.S. Coast Guard Training Center, Cape May, New Jersey, 1997.

Notes

CASE STUDY #4: MAINTENANCE FLUID RECYCLING

Current Practice and Observation

A maintenance garage at a facility scheduled and performed all regular maintenance on facility machines and vehicles. The garage produced large quantities of lacquer thinners, degreasers, carburetor cleaners, gasoline, and waste oil. The majority of the wastes entered the waste stream and was disposed of in landfills or as hazardous waste.

Recommended Action

Contact an outside contractor to pick-up and recycle waste solvents. The waste solvents should be recycled using distillation, filtration, and blending to produce reusable products

Anticipated Savings

Exhibit F.4 presents an economic comparison of the current operation to the recommended action.

Exhibit F.4: Annual Operating Cost Comparison for Waste Solvent Disposal and Waste Solvent Recycling

	Disposal	**Recycling**
Disposal Charge	$4,200/year	-----
Program Fee	-----	$2,450/year
Chemical Re-sale	**-----**	-$1,050/year
TOTAL	**$4,200/year**	**$1,400/year**
Total Estimated Annual Savings ($4,200 - $1,400): **$2,800 per year**		

Implementation

With the implementation of a waste solvent recycling program the maintenance garage realized a reduction in cost and environmental impact. The program recycled 88,000 gallons of solvent/sludge material and 265,000 gallons of waste oil in the first year. In addition, the garage met all federal and state regulations with the program. This program would not have been possible with out a local waste solvent recycler already in place.

This case study was adapted from: "Auto Dealers Cooperate in Solvent and Waste Oil Recycling Program" Enviro$ense. http://es.epa.gov/studies/htl10011.html.

Notes

THIS PAGE INTENTIONALLY LEFT BLANK

Notes

CASE STUDY #5: METAL WORKING FLUID SUBSTITUTION

Current Practice and Observations

A Swedish fixture manufacture utilized a mineral oil-based cutting oil for metalworking, a trichloroethylene solvent for degreasing, and a solvent-based paint for finishing parts. The metalworker produced 400,000 pieces per year, and was concerned about complying with air pollution standards in the future. The manufacturer was also looking for ways to reduce costs.

Recommended Action

Substitute a vegetable oil based metalworking fluid for the mineral-based oil.

Anticipated Savings

A reduction in metalworking fluid costs of $5,000 per year was estimated. Since no extra equipment is necessary for the substitution, there should not be any capital costs and the payback should begin immediate.

Implementation

The manufacturer found that the substitution of the vegetable oil-based cutting lubricant decreased mineral solvent vapor by 30 tons. The substitution also allowed changes to be made in the degreasing and finishing of the product. The environmentally detrimental degreaser was replaced with an alkaline detergent solution, and a powder-coating system was implemented for finishing. These additional changes significantly decreased emissions and saved $415,800 per year with a capital investment of $383,00.

This case study was adapted from: "Substitution of metalworking Fluid Promotes Less Need for Organic Solvent." Enviro$ense. http://es.epa.gov/studies/cs457.html.

Notes

THIS PAGE INTENTIONALLY LEFT BLANK

Notes

CASE STUDY #6: INSTALL AN AUTOMATED AQUEOUS CLEANER

Current Practices and Observations

A medium-sized metal finishing company in Connecticut used vapor degreasing, alkaline tumbling, and hand-aqueous washing methods to prepare its products for the plating process. The plant wanted to expand capacity without increasing solvent consumption.

Recommended Action

Install an automated aqueous cleaner to accommodate the growth in production, but leave the vapor degreasing, alkaline tumbling, and hand-aqueous washing equipment in place. Treat the small increase in wastewater generated by the automated cleaner with the existing wastewater treatment plant.

Anticipated Savings

Exhibit F.5 shows the anticipated reduction in waste generation for the metal finishing company.

Exhibit F.5: Waste Volume Reduction by Using the Automated Aqueous Washer

Conventional Cleaning Waste Stream	Volume Generated (gal/yr.)	Automated Washing Waste Stream	Volume Generated (gal/yr.)
Vapor Degreasing[a]		**Automated Washing[a]**	
Wastewater in separator	200	Wastewater	143,000
Still bottom in sludge	1,400	Oily Liquid	962
Alkaline Tumbling[b]		**Automated Washing[b]**	
Wastewater	1,010,880	Wastewater	85,800
		Oily Liquid	577
Hand-Aqueous Washing[c]		**Automated Washing[c]**	
Wastewater	296,400	Wastewater	57,200
		Oily Liquid	385

[a]*Based on 5,200 barrels/yr. run on automated washer instead of vapor degreaser.*

[b]*Based on 3,120 barrels/yr. run on automated washer instead of alkaline tumbler.*

[c]*Based on 2,080 barrels/yr. run on automated washer instead of had-aqueous washer.*

Implementation

The automated cleaner is utilized for most of the new work, and has been found to use 90 percent less water compared with alkaline tumbling, and 80 percent less when compared to hand aqueous washing. Because the cleaning solutions are recovered and reused in the automated washer, consumption of cleaning chemicals (and their losses through wastewater) were 40 percent lower than the alkaline soaking process and 95 percent lower than hand-aqueous washing. Some special jobs are still run through the old process. For example, delicate parts and hard to clean pieces are run through the old system. By installing an automated aqueous washer instead of a vapor degreaser or a traditional aqueous process an annual savings of $60,000 was realized. With a capital cost of $200,000, the initial investment was recovered in under three and a half years.

Notes

This case study was adapted from: "Guide to Cleaner Technologies: Cleaning and Degreasing ental Protection Agency, Office of Research and Development, 1994. EPA/625/R-93/017.

Notes

CASE STUDY #7: RECYCLING OF CLEANER THROUGH FILTRATION

Current Practice and Observations

In 1984, a chassis designer and manufacturer was producing 470,000 automotive frames, 90,000 axle housings and 250,000 van extensions. The die-cut and stamped metal chassis were produced for the automotive industry. Prior to stamping, the parts were coated with an oil-based forming compound. Once the stamping was completed, the parts were washed in hot (70°C) alkaline cleaner (pH 12) to remove the oil and grease. With prolonged use, oil contamination deteriorated the efficiency of the alkaline cleaner. Every two weeks the manufacturer was dumping 28 cubic meters of wash, but wanted to reduce disposal costs, raw material costs, and environmental damage.

Recommended Action

Install an ultrafiltration system to recycle the cleaner and recover waste oil.

Anticipated Savings

Exhibit F.6 presents the economic comparison of the current operation to the recommended action.

Exhibit F.6: Annual Operating Cost Comparison for Single Use Rinse and Recycling Rinse

Savings	Current	Percent Saved	Recommended
Raw Materials			
Alkaline Cleaner	$100,000	50%	$50,000
Oil-forming Compound	$350,000	20%	$70,000
Waste Oil Hauling	$2,600,000	90%	$260,000
Estimated Annual Net Savings			$380,000
Estimated Total Capital Cost: **$282,000**			
Payback Period: **>1 year**			

Implementation

The manufacture installed two Romicon UF modules to separate the oil waste from the cleaner. The permeate (water, cleaner, surfactants, emulsifier) are returned to the wash tank for reuse. The waste oil retentate is routed back to the process tank for concentration. Once thew waste oil in the process tank reached a maximum of 15%, the tank contents are sent for recycling or disposal. The UF membranes in the main process unit are cleaned monthly. With the ultrafiltration set-up, the manufacture is recovering 30 cubic meters of permeate daily with 4.5 cubic meters of oil-forming compound per day available for reuse. A payback period of under a year justified the fairly large capital expenditure for the manufacturer.

This case study was adapted from: "Metal Stamping Plant Recycles Alkaline cleaner and Recovers Waste Oil." Enviro$ense. http://es.epa.gov/studies/html10320.html.

Notes

THIS PAGE INTENTIONALLY LEFT BLANK

Notes

CASE STUDY #8: EFFICIENT RINSING SET-UP FOR CHEMICAL ETCHING

Current Practice and Observations

A multi-line Pennsylvania plater chemically etched all of the substrates before plating. The plater used a single bath-dip rinse to remove the etchant from the substrate. This bath dip required large quantifies of water and raw chemicals and produced high costs and amounts of wastewater.

Recommended Action

Install a countercurrent cascading rinse to minimize the volume of water used. Use restrictors to control the water on the rinse lines for better control and increased efficiency. Slightly increase dwell times between baths.

Anticipated Savings

A countercurrent cascading rinse provides improved rinsing quality with less water, thereby reducing wastewater treatment costs, raw chemical usage, and freshwater usage. The primary modifications necessary for this improvement are the installation of baffling and some piping changes, therefore capital costs are low. The restrictors manage and control the amount of water used at each location, while still proving sufficient water quantities to maintain product quality. Increasing the dwell time over the previous tank after the parts are removed minimizes the mass of contaminated drag-out entering the next bath. Even a small change in dwell time can reduce the water quantity needed for rinsing and increases the lifespan of the baths.

Implementation

The Pennsylvanian plater installed a 2-tank counterflow rinse system, flow restrictors, and slightly increased the dwell times. Exhibit F.7 illustrates the benefits realized by the plater with the implementation of a 2-tank couterflow system.

Through experimentation the plater optimized its dwell times while still allowing for maximum productivity and through-put on each of its lines. It is estimated that the hazardous waste production has decreased from 240,000 pounds per year in 1994 to 130,000 pounds per year in 1997. In addition, the company has decreased its chemical costs from wastewater treatment from $35,000 to $21,000 over the same timeframe. These cost benefits were realized with minimal capital costs, therefore cost recovery began almost immediately.

Notes

Exhibit F.7: Drag-Out Recovery as a Function of Recycle Rinse Ratio

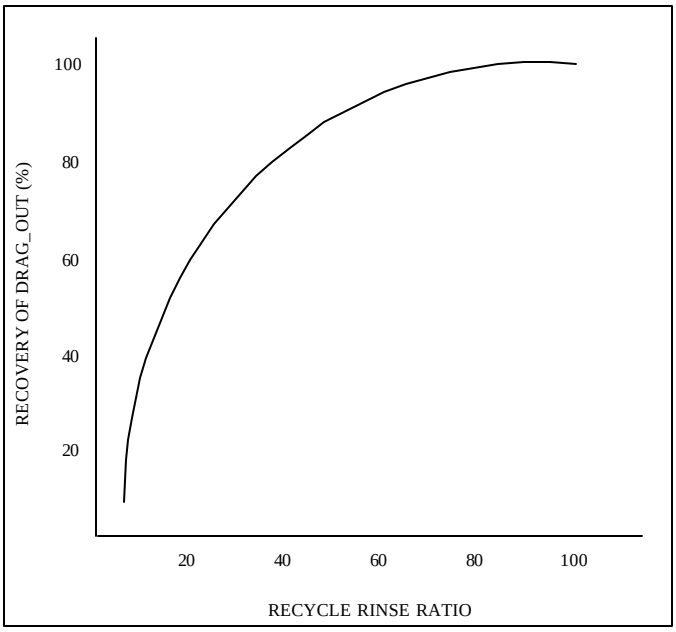

Notes:
Recyle rinse ratio = recycle rinse flow / drag-out flow rate.
Recycle rinse flow rate = surface evaporation from bath

This case study was adapted from: "The Navy Best Management Practices." Http://www.bmpcoe.org, 1997.; and Environmental Regulation and Technology: The Electroplating Industry. U.S. Environmental Protection Agency, 1985. EPA/625/10-85/001.

Notes

CASE STUDY #9: WASTE REDUCTION IN THE CHROMATE CONVERSION PROCESS

Current Practice and Observations

A manufacturer utilized captive plating, ammonium chloride zinc barrel plating, and chromate conversion coatings in the production of door and window hardware. The operation produced 160 drums of hazardous metal hydroxide sludge a year. The manufacturer wanted to reduce the volume of hazardous waste needing disposal.

Recommended Action

Install a sludge dryer to dewater the waste material, thus reducing the volume of hazardous waste needing disposal.

Anticipated Savings

Exhibit F.8 presents an economic comparison of the current operation to the recommended action.

Exhibit F.8: Economic Comparison of Wet Sludge Disposal versus Dried Sludge Disposal

	Wet Sludge Disposal	**Dried Sludge Disposal**
Waste Disposal	$29,760/year	$11,560/year*
Capital Cost	-----	$29,950**
Anticipated Total Annual Savings: **$18,200 per year**		
Payback Period: **3.5 years**		

* Includes utilities, amortization, labor, maintenance, taxes, insurance, overhead, and supplies

** Includes dryer, shipping, and installation

Implementation

With the installation of the sludge drier the manufacturer realized a reduction in waste from 160 drums of sludge to 78 drums of sludge annually. While the technology did reduce the volume of hazardous waste needing disposal, the amount of metal present in the wastestream remained constant. A complete drying cycle for this plant takes 4 to 5 hours, including loading, drying, and unloading, depending on the percent solids of the sludge. The system has been operational since 1985.

This case study was adapted from: "Sludge Drier Employed at Electroplating Plant." Enviro$ense. http://es.epa.gov/studies/cs629.html.

Notes

THIS PAGE INTENTIONALLY LEFT BLANK

Notes

CASE STUDY #10: PLATING PROCESS BATH MAINTENANCE

Current Practice and Observations

A Canadian based plater used a continuous "bleeding" process to discard contaminants of the pickling liquor. The acidic "bleed" was than neutralized with lime.

Recommended Action

Install a cartridge filter, ion exchanger, a feed pump, a sand filter, and a 400-gallon water supply tank. Pump the pickle acid from the reservoir tank through a media filter to remove dirt and oil particles, then a second smaller filter to remove very fine particles. Pass the pickled acid on to the water displacement phase, which allows the pickled acid into the resin bed of the ion exchange unit. Reuse the water from the ion exchanger by sending it back to the water supply tank. Drain the iron from the ion exchanger, and use a counterflow of water to return the trapped sulfate ions to the sulfuric acid tank.

Anticipated Savings

Exhibit F.9 presents an economic analysis of the proposed operation.

Exhibit F.9: Operating Cost Analysis for Recommended Bath Maintenance Practices

	Anticipated Start-Up Costs
Capital Costs	
Design and Supply of Equipment	$84,000
Equipment Installation	$10,000
Start-up, Supplies, Etc.	$2,500
TOTAL	**$96,500**
	Anticipated Annual Savings
Feedstock	
Sulfuric Acid	$25,942
Lime	$17,995
TOTAL Anticipated Annual Savings	**$43,937**
Payback Period:	**2.33 years**

Implementation

The plater realized almost immediate benefits with the installation of the maintenance equipment. Chemical (feedstock) use dropped almost immediately. Sulfuric acid use dropped by 561,531 pounds in the first year and lime use decreased by 224 tons in the same time period for a total chemical reduction of 89 percent. In addition to the predicted amount of economic savings, another $8,000 was saved annually on sludge hauling. Using the new maintenance process resulted in the reduction of iron content of the acid solution from an initial 7.7 percent to a steady 2-3 percent. Since pickling uniformity is a product quality improvement, product quality was at least as good as before the equipment was installed.

This case study was adapted from: "Use of Acid Purification Unit on Pickling Liquor Reduces Iron Concentration." Enviro$ense, Case Study: CS464. http://es.epa.gov/studies/cs464.html.

Notes

THIS PAGE INTENTIONALLY LEFT BLANK

Notes

CASE STUDY #11: CLOSED-LOOP PLATING BATH RECYCLING PROCESS

Current Practices and Observations

A plating operation based in Wisconsin uses an anhydrous chromic acid in its plating bath and an insoluble sulfide treatment system for cleaning. The company's typical disposal consists of 25 percent solids by weight at a cost of $0.19 per gallon of sludge. The operator wants to reduce chemical consumption and waste disposal costs.

Recommended Action

Install 75-gallon per hour closed-loop recycling system that concentrates the chromium plating bath drag-out in the rinse stream and removes it so that the plating solution bath can be returned to the main processing tank.

Anticipated Savings

The total cost to install the recovery system was estimated at approximately $60,000. If the savings in plating chemicals alone are considered, the investment would have a net cost of approximately $9,000 per year. However, if the analysis also includes the savings in treatment chemicals and in solid waste disposal charges, totaling $28,400 per year, there would be a net savings before taxes of nearly $20,000 per year and the system would pay for itself in just under four years.

Implementation

The plating company installed the 75-gallon per hour recycling system. Installation of the closed-loop recovery system reduced the need for replacing chromic acid (CrO_3) to the plating solution by approximately 4 pounds per hour. The total costs and savings of the evaporator are displayed in Exhibit F.10.

The plating company further reduced the payback period by taking advantage of the investment tax credit and accelerated deprecation allowances. The investment payback was reduced to less than three years, a most acceptable investment rate of return.

Notes

Exhibit F.10: Economic Evaluation of Evaporator Installation

Installed Cost for 75-gal/hr evaporator	$60,000
Annual Costs	
Depreciation (10-yr life)	$6,000
Taxes and insurance	$600
Maintenance	$3,600
Labor (1/2 hr/shift at $6.00/hr)	$2,250
Utilities:	
Steam (at $3.50/ 10^6 Btu)	$16,000
Electricity	$600
General plant overhead	$2,600
Total Annual Cost	$31,650
Annual Savings	
Replacement chromic acid	$21,600
Waste treatment reagents	$23,000
Sludge disposal	$5,400
Total Annual Savings	$50,000
Net savings before tax ($/yr.)	$18,350
Net savings after tax, 48% tax rate	$10,060
Payback after year (yr)	3.8
Payback with investment tax credit and accelerated depreciation (yr.)	2.6

This case study was adapted from: Environmental regulations and Technology: The Electroplating Industry. U.S. Environmental Protection Agency, 1985. EPA/10-85/001.

Notes

CASE STUDY #12: WATER-BORNE PAINT AS A SUBSTITUTE FOR SOLVENT-BASED COATINGS

Current Practices and Observations

A Washington State based aerospace corporation used a multi-line solvent-based paint application system for coating aircraft interiors. The manufacturer coated the walls, ceilings, floors, and removable parts for the aircrafts with this system. The solvent-based system was costly and barely met VOC and health and safety standards.

Recommend Action

Retrofit a portion of the solvent-based paint gun lines with ionizing electrode tips and water-borne painting equipment. Isolate all equipment from potential electric grounds to ensure proper adhesion of the electrostatic water-borne paints.

Anticipated Savings

The following economic comparison is made on a conservative set of assumptions. These assumptions are listed below.

- Waterborne paint procurement cost: $20 per gallon
- Solvent based paint procurement cost: $40 per gallon
- Solvent procurement cost: $5 per gallon
- Water usage cost: $1.94 per 1000 gallons
- Industrial wastewater disposal cost: $0.2 per gallon
- Waste paint/solvent disposal cost: $1.25 per gallon
- Paint usage: 1,560 gallons per year
- Solvent usage (solvent based painting equipment cleaning): 156 gallons per year
- Water usage: (water based paining equipment cleaning): 260 gallons per year
- Waste paint/solvent generated: 1000 pounds per year
- Wastewater generated: 260 gallons per year

Exhibit F.11 presents the economic comparison of the current operation to the recommended action.

Notes

Exhibit F.11: Annual Operating Cost Comparison for Water-Borne Paint Application and Solvent Based Paint Application

	Annual Cost of Solvent-Based Painting	Projected Costs for Electrostatic Water-Borne Painting
Operational Costs		
Paint	$62,400	$31,200
Solvent	$780	$0
Process Water	$0	$1
Wastewater Disposal	$0	$50
Waste Paint/Solvent Disposal	$1,250	$200
Total Operational Costs:	$64,430	$31,451
Anticipated Annual Savings:	($64,430 - $31,451) =	**$32,979**
Payback Period		**0.20 years**

The anticipated annual cost savings for the water-borne paint application system was $32,979. Since the capital costs for equipment was assumed to be $6500 the payback period would be under a year.

Implementation

The actual cost saving was not as high as anticipated because equipment installation and operator retraining were initially not considered in the cost analysis. The floors and some removable parts were the only parts that could not be efficiently water-borne painted. The manufacturer noticed reduced VOCs, clean-up costs, disposal costs, and hazardous waste generation, along with a quick capital cost turnaround.

This case study was adapted from: "Waterborne Paint." Navy and Marine Corps. http://enviro.nfesc.navy.mil/p2library/4-07_896.html and *"Electrostatic Paint Spray System." Navy and Marine Corps.* http://enviro.nfesc.navy.mil/p2library/4-02_896.html .

Notes

CASE STUDY #13: HIGH VOLUME LOW PRESSURE (HVLP) PAINT SYSTEM

Current Practice and Observations

A manufacturer operates a small painting operation that utilizes high pressure air-assisted paint guns. The paint guns are used for painting equipment and touchup painting on a weekly basis inside a paint booth. The manufacturer disposes of 7,600 pounds of paint-related wastes on an annual basis. Three thousand pounds of the waste were directly attributed to the spray gun operations.

Recommended Action

Replace the current high-pressure air-assisted paint guns with High-Volume Low-Pressure (HVLP) sprayers. Operate the HVLP sprayers at 10 psi.

Anticipated Savings

The following economic comparison is based on a conservative set of assumptions. These assumptions are listed below.

- 250 gallons of paint are used annually with conventional high pressure spray painting.
- Cost of paint is $120 per gallon.
- 55 gallons of paint thinner are used per year with the conventional system.
- Paint thinner costs $9.09
- 3,000 pounds of paint related wastes are generated with a conventional system.
- Disposal costs are $0.33 per pound.
- HVLP sprayers operate 50 percent more efficiently than the conventional high pressure system.

Exhibit F.12 presents an economic comparison of the current operation to the recommended action.

Exhibit F.12: Economic Comparison of Air-Assisted Paint Guns versus High Velocity Low Pressure Paint Application

Annual Cost of Current Practice:		Capital Project Costs:		Annual Project Costs:	
Paint:	$30,000	Equipment:	$1,000	Paint:	$15,000
Thinner:	$500			Thinner:	$250
Waste:	$1,000			Waste:	$500
TOTAL:	$31,500	TOTAL:	$1,000	TOTAL:	$5,750

Expected Annual Savings: $15,750

Payback Period: Immediate

Implementation

The HVLP paint guns increased the percent of sprayed paint actually being applied the substrate. The quality of the paint job resulting from the HVLP spray painting exceeded that of the conventional high-pressure spray painting equipment. The reduction in paint usage led to a decrease in exposure to hazardous chemicals. A side benefit of HVLP was the decrease in clogged paint filters and contaminated paper floor coverings, both of which are handled as hazardous waste. In addition, the HVLP equipment allowed the

Notes

operators to reduce the ventilation in the paint booths, which saves heat energy and clogging of the paint booth filters.

This case study was adapted from: "Pollution Prevention Plan." U.S. Coast Guard Training Center, Cape May, New Jersey, 1997.

ense. http://es.epa.gov/program/regional/state/wi/gehl.html.

Notes

THIS PAGE INTENTIONALLY LEFT BLANK

Notes

CASE STUDY #15: WHITE WATER AND FIBER REUSE IN PULP AND PAPER MANUFACTURING

Current Practice and Observations

A coated/fine paper mill manufactured intermediate products, later used in consumer goods. The mill did not reuse the white water from the paper making process, and disposed of waste fiber and chips separated through screening, deknotting, and general purification stages. The mill was using high quantities of chemicals and was encountering large wastewater treatment, fresh water, energy, and disposal costs.

Recommended Action

Install white water and fiber recovery and reuse equipment. Return white water as filler in the paper production process and reprocess captured fibers through chippers and digesters.

Anticipated Savings

The direct savings associated with the reuse of water and pulp include reduced water use, waste generation, and energy use for fresh and waste water pumping and freshwater heating. The less tangible benefits of water and pulp reuse often include increased revenue from enhanced product quality, better company or product image, and reduced maintenance costs. Since the mill manufactures intermediate, rather than consumer products, it cannot directly market its products on the basis of environmental performance in the way that a consumer products company does. The estimated financial savings of implementing water and fiber reuse are listed in Exhibit F.14.

Exhibit F.14: Summary of Financial Data for White Water and Fiber Reuse

	Water and Fiber Reuse
Total Capital Costs	$1,469,404
Financial Indicators	
Net Present Value – years 1-10	$2,073,607
Net Present Value – years 1-15	$2,851,834
Internal Rate of Return – years 1-10	46%
Internal Rate of Return – years 1-15	48%
Annual Savings*	$911,240
Estimated Annual Payback Period	1.6 years

*Annual operating cash flow before interest and taxes.

Implementation

The mill realized both monetary and environmental savings with the implementation of the white water and fiber reuse equipment. The initial capital investment was paid back well within the mill's 2-year payback rule of thumb.

This case study was adapted from: "Accelerating Industrial Pollution Prevention through Innovative Project Financial Analysis; With Application to the Paper and Pulp Industry." U.S. Environmental Protection Agency, Office of Policy Planning and Evaluation, 1993. EPA/742/R-93/004.

Notes

THIS PAGE INTENTIONALLY LEFT BLANK

Notes

CASE STUDY #16: CHEMICAL SUBSTITUION IN PULP AND PAPER MANUFACTURING

Current Practice and Observations

A pulp and paper manufacturer produced products for book publishers and other intermediate product manufactures. The paper was coated with a solvent/heavy metal coating to increase the durability and visual appearance. The solvent based coating process was producing high levels of VOC emissions and hazardous waste, and using large quantities of heavy metals.

Recommended Action

Replace the solvent/heavy metal paper coating with an aqueous/heavy metal-free coating. Construct a steam heated coating storage shed to gain the longest shelf life from aqueous coatings.

Anticipated Savings

Both environmental and financial savings were anticipated with the proposed chemical substitution. Environmentally, the chemical substitution was expected to reduce the levels of fugitive emissions and the amount of solid waste going to the landfill. Monetary savings associated with the proposed chemical substitution include a decrease in solvent recovery, management, future liability, and regulatory compliance costs. Less tangible financial benefits expected of the pollution prevention investment included increased revenue from enhanced product quality, company and product image, and worker health maintenance costs. Although the company expected some quality improvements using aqueous coatings it did not anticipate an increase in market value. Therefore, it expected no increase in domestic sales as a result of the conversion to the aqueous/heavy metal-free coating. The company hoped to improve its competitive advantage in the European market if the European Economic Community implements lead-free packaging standards (which would apply to books) as expected. A reduction in solvent use was expected to reduce worker exposure to fugitive solvent emissions, and eliminate nitrocellulose from the coating mixture to reduce flammability and explosive hazards. The reduced solvent exposure was expected to result in lower incidence of worker illness over the long-term and lower company health care costs. The estimated financial savings of implementing the proposed chemical substitution are listed in Exhibit F.15.

Exhibit F.15: Summary of Financial Data for Aqueous/Heavy Metal Conversion

	Aqueous Coating
Total Capital Cost	$893,449
Financial Indicator	
Net Present Value – Years 1-10	$314,719
Net Present Value – Years 1-15	$203,719
Internal Rate of Return – Years 1-10	6 percent
Internal Rate of Return – Years 1-15	11 percent
Estimate Annual Savings (BIT)*	$118,112
Payback Period	7.6 years

*Annual operating cash flow before interest and taxes

Implementation

The pulp and paper manufacturer found that while heavy-metal usage, VOC emissions, and hazardous waste generation decreased, there was an increase in water, steam, and electricity usage.

Notes

This case study was adapted from: "Accelerating Industrial Pollution Prevention through Innovative Project Financial Analysis; With Application to the Paper and Pulp Industry." U.S. Environmental Protection Agency, Office of Policy Planning and Evaluation, 1993. EPA/742/R-93/004.

Notes

CASE STUDY #17: ON-SITE RECYCLING

Current Practices and Observations

A medium-sized printer located in Los Angeles, CA produces a wide range of commercial printing products including advertising inserts, business forms, brochures and pamphlets, and circulars. The printer uses non-heat set inks exclusively. Approximately 1,500 pounds of ink in 17 different colors are used per month. The inks are ordered in 30-pound kits. Black inks cost from $1.50 to $3.50 per pound; colored inks from $3.50 to $7.50 per pound. The plant has an arrangement with its ink suppliers in which all of the waste inks are returned to the supplier to be reformulated into black ink. The supplier mixes fresh black ink into the waste ink to obtain an acceptable black color. Typically 50 to 100 pounds of fresh ink is added to each 100 pounds of waste ink. Approximately 200 to 300 pounds of waste ink are returned each month to the manufacturer. After blending with the fresh black ink, the plant buys back 300 to 500 pounds per month of black ink at a cost of $3.00 per pound. The price for the reformulated ink is relatively high based on the relatively low quality of the ink. Fresh ink of comparable quality typically costs $1.55 per pound.

Recommended Action

The plant can obtain a potentially quick payback on its investment by purchasing an ink recycler. A small on-site ink recycler is available which blends 60 pounds of waste ink with 120 pounds of fresh ink to produce a 180-pound batch of reformulated black ink. The complete batch is then filtered and is ready for use. One batch can be processed in one hour.

Anticipated Savings

The following economic comparison is made on a conservative set of assumptions. These assumptions are listed below.

- 200 pounds of waste ink are produced per month.
- Labor and utility costs are negligible.
- Both cases produce a total quantity of black ink of 600 pounds per month

Case A: The plant buys a small on-site ink recycler.

- The recycler blends in 400 pounds of fresh ink to produce 600 pounds of reformed ink.
- The fresh ink costs $1.55 per pound.
- The ink recycler costs $5,900.

Case B: Keep the existing arrangement with the ink manufacturer.

- The ink manufacturer blends in 100 pounds of fresh ink to produce 300 pounds of reformulated ink per month. The costs of this reformulated ink is $3.00 per pound
- The printer buys an additional 300 pounds of fresh ink at $1.55 per pound.

Exhibit F.16 presents an economic comparison of the current operation to the recommended action.

Notes

Exhibit F.16: Economic Comparison of On-Site versus Off-Site Ink Recycling

	Case A	Case B
Material Balance, (Pounds per Month)		
Waste ink	200	200
Fresh ink for blending	400	100
Reformulated ink	600	300
Additional fresh ink	0	300
Total available ink	600	600
Operating Cost, (dollars per month)		
Waste ink	$0	$0
Fresh ink for blending (@ $1.55/lb)	$620	$0
Buy back reformulated ink (@ $3.00/lb	$0	$900
Buy additional fresh ink (@ $1.55/lb)	$0	$465
Total Operating Costs to Recycle Ink	$620	$1,365
Anticipated Annual Savings per Month	$745	
Payback Period	7.92 months	

Implementation

With a cost savings in operating costs of $745 per month the $5,900 initial capital investment for the on-site ink recycler can be recovered in just less than 8 months. The time and labor costs of preparing waste ink for off-site recycling are comparable to that required to prepare and operate the on-site ink recycler.

This case study was adapted from: Guides to Pollution Prevention, The Commercial Printing Industry. U.S. Environmental Protection Agency, Office of Research and Development, 1990. EPA/625/7-90/008.

Notes

CASE STUDY #18: SOLVENT REDUCTION IN COMMERCIAL PRINTING INDUSTRY

Current Practice and Observations

A commercial screen printing firm produces a wide variety of products including decals, banners, point-of-purchase displays, and original equipment manufacture. Over the 40 years of its operation, this company has experienced toughening environmental and health regulations on local, state, and federal levels. Many regulations have required expensive changes or threats of high fines for noncompliance. About 60 percent of the company's printing is done with traditional solvent-based inks and 40 percent with ultraviolet (UV) curable inks. Open tanks of solvent-based cleaning product allowed large amounts of VOCs to evaporate directly into the shop.

Recommended Action

Install an in-process 5-gallon recycling still to recover solvents for reuse within a closed system.

Anticipated Savings

The following economic comparison is based on a conservative set of assumptions. These assumptions are listed below.

- The current operation uses 40 gallons of solvent per day.
- With a solvent recovery still, one 55-gallon drum of solvent is used every four weeks.

Exhibit F.17 presents an economic analysis of the recommended action.

Exhibit F.17: Cost Analysis for a 5-Gallon In-Process Solvent Recycling

Costs	5- Gallon In-Process Solvent Recycling Still
Capital Cost:	$2,900
Anticipated Daily Savings Over Open Tank System:	$83 per day
Anticipated Annual Savings Over Open Tank System:	$20,750 per year
Payback Period	7 weeks

Implementation

The company recognized almost immediate results with the installation of the in-process solvent recycling still. The amount of solvent used daily dropped by almost 38 gallons, which led to savings of nearly $85 per day. Along with cost benefits the new system severely reduced VOC releases. The VOC reduction improved working conditions, and placed the company's emissions below environmental regulatory limits.

This case study was adapted from: "Small Business Waste Reduction Guide, Screen Printing Case Study #1." Enviro$ense. http://es.epa.gov/new/business/sbdc/sbdc118.htm.

Notes

THIS PAGE INTENTIONALLY LEFT BLANK

INDEX

Notes

A

Absorption refrigeration · 258, 287, 289, 290
capacity · 62, 66, 72, 73, 246, 259, 281, 285, 288, 289, 291, 292, 294, 295
operation · 17, 57
Affirmative procurement · 94
Affirmative Procurement · 14
Air · 8, 18, 63, 72, 74, 77, 78, 272, 274, 275, 277, 278, 279, 280
boiling curve · 3
components of · 2
conditioning · 6. *See* Air condtioning
cooling of moist air · 8. *See* also Air conditioning
distribution system · 7
energy content · 3
heat addition to moist air · 6. *See* also Air conditioning
heat gain calculations · 12
heat loss calculations · 10. *See* also Air conditioning
humidity · 3
properties of · 2
real (moist) · 2
relative humidity · 4
specific volume · 4
water vapor · 2
water vapor, amount in · 3
Air compressor · 7, 272, 277
air leaks · 7, 274, 275, 276, 280
case study
install a low pressure blower to reduce compressed air use · 17
repair compressed air leaks · 13
controls · 63, 83, 272, 277
intake · 68, 272, 278
low pressure blower · 279, 280
low pressure blowers · 280
power · 7, 61, 62, 63, 64, 65, 66, 68, 69, 70, 71, 72, 73, 74, 264, 271, 272, 275, 277, 278, 279
pressure · 7, 72, 73, 262, 263, 264, 269, 271, 272, 274, 275, 276, 277, 278, 279
screw · 7, 272, 276, 277, 278
types · 7
waste heat · 61, 272, 277
Air conditioning · 8, 45, 46, 63, 68, 303, 304, 305, 306, 307, 308, 309, 310, 311, 312, 314, 318, 332
air cleaners · 304
air washer · 304, 324
coils · 8, 303, 304, 308, 332
controls · 63, 83, 305, 308
distribution system · 62, 65, 66, 303, 305
economizer cycle · 310, 311, 312, 313
energy conservation · 3, 4, 8, 46
enthalpy switchover method · 310, 313
fans · 6, 68, 315, 327, 329
filters · 80, 304, 305
outdoor temperature method · 312, 313
processes · 6
Air emission · 4, 20, 40, 44, 47, 52, 61, 74, 75, 78, 84, 116, 124, 132, 133, 134, 136, 137, 144, 146, 149, 156, 172, 174, 179, 180, 181, 182, 183, 184, 185, 197, 202
control costs · 44
costs · 20, 40, 41, 43, 51, 57
fees · 44, 108
labor · 3, 12, 44, 48, 91, 96, 97, 98, 100, 101, 102, 103, 106, 114, 116, 137, 140, 143, 192, 195, 208, 241
monitoring · 44, 62, 75, 150, 167, 168, 193, 194, 204, 205, 234, 239
sources · 61, 67, 73, 74, 103, 122, 123, 156, 210, 212, 234, 244, 247, 248, 249
Air emissions · 44
management · 44
Annubar · 43
Assessment · 1, 2, 3, 11, 12, 13, 14, 15, 16, 17, 18, 20, 21, 39
analysis · 3, 4, 18, 19, 21, 24, 25, 39, 40, 45, 47, 48, 49, 52, 53, 67, 105, 109, 123, 130, 131
assessment · 1, 2, 3, 11, 12, 13, 14, 15, 16, 17, 18, 39, 61, 63, 76
assessment team · 2, 3, 5, 8, 36, 40, 43, 44, 45, 46, 76
benefits · 1, 3, 11, 12, 22, 26, 45, 50, 52, 62, 68, 93, 101, 104, 107, 117, 124, 126, 127, 128, 135, 137, 140, 141, 154, 161, 167, 172, 173, 180, 186, 189, 192, 194, 196, 204, 208, 212
block diagram · 19
data · 3, 14, 18, 19, 21, 22, 23, 24, 35, 64, 67
collection · 3, 18, 19, 20, 23, 35, 40, 41, 45, 55, 100, 130, 191, 193
energy graphs · 32
energy usage · 2, 3, 20, 21, 31, 32, 36, 45, 46, 69, 278, 315
equipment · 1, 3, 4, 5, 6, 7, 8, 11, 12, 18, 19, 20, 21, 22, 25, 26, 43, 45, 46, 47, 48, 51, 52, 54, 55, 57, 62, 63, 64, 66, 67, 68, 71, 72, 74, 77, 79, 80, 83, 87, 88, 89, 96, 101, 105, 106, 110, 112, 116, 117, 120, 122, 123, 127, 129, 130, 132, 133, 142, 143, 144, 145, 146, 147, 148, 156, 164, 165, 169, 172, 176, 177, 179, 184, 188, 190, 191, 193, 196, 206, 207, 209, 212, 234, 239, 241, 244, 245, 247, 249, 250, 252, 253, 254, 257, 262, 265, 269, 272, 279, 281, 292, 294, 296, 299, 300, 303, 304, 305, 306, 307, 316, 317, 327, 329, 331, 332
facility description · 3, 18, 26
information · 1, 3, 12, 14, 17, 18, 19, 20, 21, 22, 25, 35, 39, 40, 43, 45, 57, 58, 67, 71, 74, 87, 99, 101, 104, 105, 147, 149, 150, 154, 172, 186, 281
operations · 3, 4, 6, 12, 17, 19, 21, 22, 23, 25, 26, 28, 29, 39, 40, 43, 61, 63, 67, 68, 72, 73, 74, 75, 76, 79, 87, 93, 95, 100, 102, 103, 104, 105, 107, 110, 111, 112, 116, 117, 118, 121, 128, 130, 144, 145, 148, 149, 150, 151,

Notes

154, 155, 156, 158, 161, 172, 173, 174, 184, 185, 186, 188, 189, 190, 196, 197, 198, 199, 202, 204, 205, 206, 210, 212
pre-assessment collection · 18
process description · 3, 18, 19, 20, 28, 29
process flow diagram · 3, 18, 19, 23, 35
raw materials · 2, 15, 19, 20, 47, 52, 78, 81, 84, 156, 165, 199, 208
utilities · 20
utilities (*See* energy usage) · 13, 19, 21, 47, 48, 61, 63, 66, 70
utility information · 20
waste generation data · 18, 22
waste streams · 19, 20, 22, 24, 74, 92, 104, 107, 149, 156, 164, 167, 188, 211
economic · 3, 12, 24, 25, 39, 48, 50, 51, 52, 53, 54, 57, 66, 254, 294, 300
energy · 1, 2, 3, 5, 7, 8, 11, 12, 14, 15, 18, 20, 21, 26, 36, 40, 43, 45, 46, 52, 61, 62, 63, 67, 68, 69, 70, 71, 72, 73, 234, 238, 241, 242, 243, 244, 245, 246, 247, 248, 249, 250, 252, 253, 254, 256, 257, 258, 259, 262, 263, 264, 265, 269, 272, 274, 275, 276, 277, 278, 279, 281, 285, 286, 287, 290, 291, 292, 294, 295, 296, 297, 298, 299, 300, 301, 303, 305, 306, 308, 310, 315, 316, 317, 318, 327, 329, 331
energy graphs · 21
evaluation · 3, 4, 11, 12, 22, 24, 25, 39, 44, 45, 47, 48, 54, 57, 254, 255, 258, 259, 298, 330, 331
evaluation · 39. *See* also Evaluation
example · 5, 8, 15, 17, 36, 40, 53, 62, 63, 64, 66, 67, 68, 74, 91, 98, 122, 124, 130, 137, 139, 150, 189, 195, 202, 203, 206, 212, 234, 241, 242, 243, 244, 245, 247, 248, 249, 252, 258, 259, 281, 285, 286, 287, 293, 294, 295, 297, 298, 299, 301, 307, 309, 312, 313, 318, 319, 320, 328, 329, 331
facility description · 3, 18, 26
facility layout · 19
feasibility analysis · 3, 24, 39
implementation · 1, 3, 4, 11, 13, 14, 24, 25, 26, 39, 45, 47
industrial · 1, 2, 4, 6, 11, 12, 13, 14, 15, 16, 17, 26, 39
industrial assessment · 12
instrumentation for · C-1
management support · 2, 13, 26
methodology · 11, 15, 16, 24
objectives · 14, 17
opportunity (*See* Opportunity) · 1, 3, 4, 5, 12, 14, 19, 22, 23, 24, 25, 39, 44, 45, 46, 47, 51, 57, 66, 67, 294, 299
phases · 2, 16, 24
planning and organization · 3, 12, 17
pollution prevention · 1, 2, 3, 5, 11, 14, 15, 18, 20, 22, 24, 25, 26, 37, 45, 48, 49, 53, 62, 73, 75
prioritization of opportunities · 24
procedures · 3, 16, 23, 24, 39, 45, 48
process description · 3, 18, 19, 20, 28, 29
process flow diagram · 3, 18, 19, 23, 35
raw materials · 2, 15, 19, 20, 47, 52, 78, 81, 84, 156, 165, 199, 208
report · 25
SIC · 76, 77, 78, 79, 80, 81, 82, 83, 84, 280
strategy · 17
structure · 57, 128
team · 17
technical · 3, 4, 24, 25, 39, 45, 53
types · 1, 17, 18, 63, 74
utility
information · 25
waste · 1, 3, 11, 13, 15, 17, 18, 19, 20, 24, 25, 26, 36, 43, 44, 52, 55, 56, 57, 61, 62, 72, 73, 74, 75, 76, 77, 79, 80, 81, 82, 83
waste generation · 1, 2, 3, 11, 12, 14, 17, 18, 19, 22, 35, 40, 45, 55, 56, 73, 81

B

Ballast · 231
Belt · 220, 221, 222
Boiler · 36, 53, 224, 234, 235, 236, 238, 239, 240, 241, 242, 243, 245, 254, 256, 257, 258
air fuel ratio · 39, 235
air/fuel · 6
blowdown · 6, 235, 236, 238
case studies
Implement periodic inspection and adjustment of combustion in an oil fired boiler · 3
case study
implement periodic inspection and adjustment of combustion in an oil fired boiler · 5
combustion · 6, 53, 54, 72, 234, 236, 238, 239, 240, 241, 242, 243, 244, 246, 247, 250, 252, 253, 254
distribution system · 6
economizers · 235, 245
efficiency · 6, 24, 73, 80, 83, 234, 235, 236, 238, 240, 241, 242, 244, 248, 251, 252, 253, 257, 258, 282, 285, 292, 295, 296, 297, 298, 299
feed water preheat · 244
fire tube · 234
flue gas · 53
forced draft · 234
high pressure · 77, 234
hot water · 8, 73, 234, 243, 246, 247, 255, 287, 288, 295, 296, 297
natural draft · 234
natural gas · 15, 21, 54, 61, 71, 241, 248, 249, 250, 251, 254, 257
operation · 6, 17, 57
performance improvements · 241
return system · 6, 234, 243, 244
steam · 6, 8, 15, 20, 24, 39, 45, 46, 61, 67, 72, 73, 82, 234, 235, 236, 242, 243, 244, 247, 248, 254, 255, 256, 257, 258, 287, 288, 289, 290, 291, 295, 296, 297
steam leaks · 72, 242
steam traps · 6, 243, 244
tips · 234
water tube · 234, 235
Boilers · 46
Burner · 21, 240, 241, 250, 251
combustion efficiency · 6, 240, 250
excess air · 53, 235, 241, 245, 252

C

CAA (*See* Clean Air Act) · 4, 74
Ceiling fan · 247, 248
Ceiling fans
  case study
    energy saving from installation of ceiling fans · 7
Centrifugal pump · 7, 262, 263, 264, 265
  curve · 67, 263, 265, 266, 267, 271, 294
Chiller · 288
  absorption · 8, 73, 287, 288, 289, 290, 300
Chlorination · 83, 212
Clean Air Act · 4, 54, 173
Cleaning · 31, 37, 63, 76, 87, 110, 112, 116, 117, 119, 120, 121, 127, 131, 132, 134, 135, 138, 139, 140, 141, 142, 143, 149, 150, 154, 155, 172, 185, 198, 203, 213
Coal · 46, 235
Coefficients · 323
  convection heat transfer · 323
Cogeneration · 6, 61, 253, 254, 255
  cycles · 252, 254, 259
  high spot evaluation · 258
Combustion · 72, 234, 238, 239, 240, 241, 242, 244, 245, 250
  air preheat · 244, 245, 247
  efficiency · 6, 73, 80, 83, 234, 235, 236, 238, 240, 241, 242, 244, 248, 251, 252, 253, 257, 258
  incomplete · 250
Compressed air · 4, 7, 22, 24, 57, 80, 262, 272, 274, 278, 280
Cooling · 7, 281, 282, 283, 284, 286, 289, 304, 308, 309, 318, 324, 325
  direct evaporative · 281
Cooling tower · 7, 281, 286
  atmospheric · 79, 281
  hot gas defrost · 8
  hyperbolic · 282
  induced draft · 282
  performance · 57, 63, 286, 294, 295, 296, 298
Cost · 32, 35, 43, 51, 53, 55, 56, 97, 135, 161, 214, 233, 241, 242, 243, 244, 249, 259, 272, 274, 277, 278, 279, 280, 285, 286, 287, 290, 297, 298, 299, 300, 307, 313, 314, 328
  equipment · 47
  installation · 48, 55, 57, 66, 68, 96, 110, 151, 189, 215, 221, 230, 231, 242, 244, 252, 253, 254, 255, 264, 269, 294, 296, 300, 305, 306, 330
  labor · 3, 12, 40, 43, 44, 48, 57, 91, 96, 97, 98, 100, 101, 102, 103, 106, 114, 116, 137, 140, 143, 192, 195, 208, 227, 241
  modifications · 47
  project · 48, 49, 50, 51, 54, 57, 58, 59, 195, 254
  software · 61
  waste · 11, 12, 13, 14, 20, 40, 43, 44, 55, 56, 57, 61, 62, 72, 73, 74, 75, 76, 77, 79, 80, 81, 82, 83, 87, 90, 91, 92, 93, 94, 96, 98, 99, 100, 101, 102, 103, 104, 105, 106, 107, 108, 109, 110, 112, 113, 114, 115, 116, 117, 123, 130, 140, 143, 144, 145, 146, 147, 148, 149, 150, 151, 153, 154, 155, 156, 158, 164, 165, 167, 168, 169, 170, 171, 172, 179, 180, 181, 182, 183, 184, 185, 188, 189, 190, 193, 195, 196, 197, 198, 202, 203, 204, 206, 207, 208, 209, 210, 211, 212, 245, 247, 250, 252, 253, 254, 257, 272, 277, 287, 290, 330
  waste management · 13, 20, 74, 87, 93, 100, 105, 112, 117, 147, 172, 185, 204, 212
Cost savings · 4, 25, 26, 52
  industrial processes · 210, 234
  methods · 4, 7, 37, 49, 51, 52, 54, 57, 77, 79, 81, 84, 89, 103, 122, 124, 131, 135, 143, 144, 155, 156, 158, 161, 162, 163, 164, 165, 167, 168, 172, 174, 178, 180, 185, 186, 193, 198, 202, 209, 212, 238, 250, 252, 258, 263, 264, 270, 271, 307, 310, 314, 315, 330
Cost savings (See also electricity cost reduction) · 36, 47, 75, 90, 97, 140, 149, 156, 167, 206, 208, 241, 242, 243, 244, 255, 272, 274, 275, 276, 277, 278, 279, 285, 286, 287, 297, 298, 299, 301, 317
Cost savings calculations
  methods · 48

D

Decision matrix · 3, 24, 25, 37
Decomposition · 15, 146, 163
DEFINITIONS · D-1
Degreasing · 74, 81, 116, 117, 120, 127, 134, 138, 139, 140, 146, 149, 150, 152, 153, 156, 158, 174, 196
Demand · 41
  controls · 63, 83, 234, 235, 241, 243, 250, 251, 257, 272, 277, 305, 308
  peak demand · 21, 36
  peak demand · 31
  reduction · 62, 63, 66, 67, 68, 75, 79, 235, 242, 243, 245, 247, 258, 263, 264, 267, 270, 271, 272, 312, 313, 314, 316, 328, 329, 332
  shifting · 63
Demand (*See* also load) · 17, 21, 40, 41, 61, 63, 65, 66, 67, 68, 69, 70, 71, 72, 253, 254, 256, 257, 258, 259, 264, 272, 277, 313, 329
Destratification · 6, 247, 248
Destratification fan · 247
Detoxification · 15
Disposal (*See* Waste) · 12, 15, 20, 40, 43, 44, 47, 48, 52, 53, 55, 56, 57, 62, 73, 74, 75, 90, 91, 92, 96, 97, 98, 99, 100, 101, 102, 103, 106, 108, 109, 110, 114, 116, 119, 123, 124, 131, 132, 139, 141, 143, 147, 154, 156, 169, 170, 171, 172, 176, 178, 186, 188, 190, 191, 193, 194, 196, 203, 204, 208, 209
Documents · 5, 14
Dragout · 124, 136, 139
Drive · 61, 63, 242, 246, 265, 271, 291, 294
  variable frequency · 6, 234, 264, 265

E

Economic feasibility · 3, 4, 24, 25
  internal rate of return · 54, 58, 59
  net present value · 50, 54, 57, 58

Notes

Notes

payback period · 25, 49, 55, 57
total cost accounting · 52, 53, 54
Economizer · 281, 292, 310, 311, 312, 313
Efficiency · 1, 2, 6, 7, 11, 12, 14, 15, 17, 24, 26, 43, 45, 73, 80, 83, 214, 215, 216, 217, 220, 222, 223, 229, 230, 231, 234, 235, 236, 238, 240, 241, 242, 244, 248, 251, 252, 253, 257, 258, 262, 263, 264, 269, 271, 275, 276, 278, 282, 285, 292, 295, 296, 297, 298, 299, 303, 304, 305, 306, 315, 316, 327, 328, 329, 331
thermal · 8, 61, 73, 241, 246, 252, 253, 257, 258, 259, 281, 299
Electric bill · 40, 65, 66, 69, 71
charge · 40
components · 62, 63, 74
customer charge · 40
customer charge · 41
demand charge · 17, 40, 66, 67, 68, 70, 71, 72
demand charge · 41
energy charge · 68, 69, 70
example · 62, 63, 64, 66, 67, 68, 74
gross bill · 70
industrial use · 72
peak demand · 66, 67, 68, 72
power factor · 41, 63, 64, 65, 66, 68, 70
reactive demand charge · 41
sales tax · 42
service charge · 69
structure · 40
voltage · 41, 62, 63, 65, 66, 68, 70, 71
Electric motor · 5, 7, 214, 262, 271, 291
efficiency · 73, 80, 83, 214, 215, 216, 217, 220, 222, 223, 229, 230, 231, 262, 263, 264, 269, 271, 275, 276, 278, 282, 285, 292, 295, 296, 297, 298, 299, 303, 304, 305, 306, 315, 316, 327, 328, 329, 331
high efficiency · 216, 228, 263
idling · 5, 214
load reduction · 292
mechanical drives · 221
speed control · 220, 221
speed reduction · 221
torque · 214, 220, 221, 222
Electric rate · 227
Electrical power
components · 62, 63, 74, 228, 303, 315, 317
Electricity · 34, 46, 62, 63, 73, 214, 216, 221
controllers · 67, 68, 218, 241
distribution system · 41, 62, 65, 66, 269, 303, 305
electric bill (*See* Electric Bill) · 40, 65, 66, 69, 71
industrial use · 72
lamp maintenance · 227
lamp replacement · 227, 230
lights · 62, 225, 226, 227
transformers · 62
Electricity costs · 34
Electronic ballast · 228, 229, 232
Emission reduction · 133
aqueous cleaning · 81, 117, 132, 134, 139, 140, 145
substitution · 57, 58, 61, 132, 173
Encapsulation · 15
Energy · 1, 2, 3, 4, 5, 6, 7, 8, 11, 12, 13, 14, 15, 18, 20, 21, 31, 32, 40, 41, 43, 45, 46, 52, 60, 61, 62, 63, 67, 68, 69, 70, 71, 72, 73, 39, 214, 218, 219, 220, 221, 222, 223, 226, 227, 228, 229, 230, 231, 232, 233, 234, 238, 241, 242, 243, 244, 245, 246, 247, 248, 249, 250, 252, 253, 254, 256, 257, 258, 259, 260, 262, 263, 264, 265, 269, 272, 274, 275, 276, 277, 278, 279, 280, 281, 285, 286, 287, 290, 291, 292, 294, 295, 296, 297, 298, 299, 300, 301, 302, 303, 305, 306, 308, 310, 315, 316, 317, 318, 327, 329, 331, 332
alternative · 78, 79, 83, 231, 243, 248, 263, 271
charge · 67, 68, 69, 70, 71, 258, 287
coal · 61, 72, 73, 235, 254, 258
conservation · 4, 5, 6, 11, 12, 15, 25, 43, 45, 61, 62, 223, 262, 276, 303, 318
consumption · 18, 20, 31, 45, 46
cooling · 6, 7, 8, 45, 244, 246, 248, 252, 259, 269, 272, 277, 279, 281, 282, 285, 286, 287, 288, 291, 292, 293, 294, 295, 297, 300, 304, 307, 308, 310, 312, 313, 317, 324
cooling season · 21
cost · 1, 6, 7, 11, 13, 21, 31, 32, 41, 49, 54, 57, 61, 62, 67, 68, 69, 70, 71, 73, 75, 216, 218, 220, 221, 222, 223, 226, 227, 228, 230, 232, 241, 242, 243, 244, 248, 249, 253, 254, 255, 256, 257, 258, 259, 263, 264, 265, 271, 272, 274, 275, 276, 277, 278, 279, 285, 286, 287, 289, 290, 295, 297, 298, 299, 300, 301, 303, 305, 308, 309, 310, 312, 313, 314, 317, 328, 331
costs · 18, 20, 33, 39
electric · 4, 6, 21, 40, 42, 61, 62, 65, 66, 67, 69, 71, 72, 78, 214, 215, 218, 220, 227, 230, 238, 248, 249, 250, 253, 257, 258, 262, 264, 271, 287, 291
fossil fuel · 4, 72, 254
generation · 4, 47, 61, 63, 67, 72, 73, 74, 75, 78, 228, 235, 236, 240, 253, 257, 258, 320
heating · 6, 8, 40, 45, 54, 61, 63, 72, 73, 218, 231, 236, 239, 241, 243, 244, 245, 246, 247, 248, 249, 250, 252, 255, 257, 259, 272, 292, 295, 297, 299, 303, 304, 307, 308, 309, 310, 313, 317, 324, 327, 328, 331
heating season · 21
hydroelectric · 4, 73
management · 43
nuclear · 61, 258
reduction · 25
solar · 73, 258
solid waste · 14, 72, 73, 74, 75
sources · 4, 6, 21, 45, 61, 67, 73, 74, 221, 231, 234, 244, 247, 248, 249, 290, 331
terminology · 40
thermodynamic analysis · 1
unit of measure · 3, 21, 45, 47
usage · 13, 21, 32, 61, 71, 72, 74, 80, 230, 257, 263, 272, 278, 287, 299, 331
wind · 73
energy conservation · 1, 3, 4
Energy conservation · 1, 2, 3, 4, 5, 8, 9, 11, 12, 14, 15, 17, 18, 20, 22, 23, 24, 25, 26, 36, 37, 39, 40, 45, 46, 47, 48, 51, 53, 60, 62, 72, 39, 214, 220, 226, 234, 242, 243, 247, 254, 258, 260, 262, 263, 265, 272, 276, 281, 303, 305, 306, 315, 317, 318, 329, 332

Energy conservation opportunities · 1
energy saving from installation of ceiling fans · E-7
implement periodic inspection and adjustment of combustion in an oil fired boiler · E-5
implement periodic inspection and adjustment of combustion in an oil fired boiler · E-3
install a low pressure blower to reduce compressed air use · E-17
install infrared radiant heaters · E-9
repair compressed air leaks · E-13
Energy Conservation Opportunities
Implement periodic inspection and adjustment of combustion in a natural gas fired boiler · E-3
Energy conservation opportunity · 5, 11, 12, 22, 37, 40, 46, 72, 247
Repair compressed air leaks · 36
Energy consumption
reduction · 46
Energy source · 22
information · 40
Energy usage · 33, 47
Environmental Protection Agency (*See* EPA) · 60, 39, 213
EPA · 1, 3, 5, 9, 11, 14, 15, 18, 60, 74, 39, 94, 120, 121, 181, 182, 213
17 Industrial Toxics · 14
Regional offices · A-1
Equipment · 5, 20, 22, 24, 25, 36, 53, 77, 82, 214, 220, 245, 257, 260, 279, 296, 300, 303, 315, 316
absorption · 8, 73, 244, 258, 287, 288, 289, 290, 300
air compressors · 5, 7, 63, 225, 272, 274, 278
air conditioning · 8, 45, 68, 244, 258, 290, 291, 292, 294, 300, 303, 304, 305, 306, 307, 308, 310, 311, 312, 314
boilers · 5, 11, 45, 53, 72, 73, 74, 234, 235, 241, 242
cogeneration · 6, 61, 253, 254, 255, 257, 258, 290
cooling towers · 7, 281, 282, 286, 292
drying (*See* heating) · 6, 73, 83, 247, 250, 290, 329, 332
fans · 6, 8, 68, 216, 218, 225, 243, 247, 248, 265, 269, 271, 281, 282, 315, 327, 329
furnaces · 11, 72, 74, 78, 225, 244, 250, 251, 252
heating · 6, 8, 40, 45, 54, 61, 63, 72, 73, 218, 231, 236, 239, 241, 243, 244, 245, 246, 247, 248, 249, 250, 252, 255, 257, 259, 272, 292, 295, 297, 299, 303, 304, 307, 308, 309, 310, 313, 317, 324, 327, 328, 331
HVAC · 8, 11, 292, 303, 315, 316, 317, 318, 319
HVAC · 1
insulation · 6, 8, 222, 245, 250, 252, 253, 281, 292, 296, 297, 298, 299, 300, 321
list · 3, 22, 23, 67, 68, 74, 75, 76, 240
mechanical · 5, 8, 81, 214, 220, 221, 225, 229, 281, 282, 287, 290, 292, 295, 296, 303, 310, 327
modifications · 15, 45, 47, 57, 75
motors · 5, 6, 8, 45, 62, 63, 64, 65, 66, 214, 215, 216, 217, 218, 220, 221, 222, 224, 225, 262, 264, 271, 280, 281, 286, 316, 317
pumps · 7, 57, 61, 77, 83, 218, 225, 226, 236, 262, 263, 264, 265, 267, 281, 292, 307
refrigeration · 7, 8, 258, 259, 264, 281, 287, 290, 291, 292, 293, 294, 295, 298, 304, 307, 310
thermal storage · 61, 258, 259
ventilation · 8, 222, 247, 303, 313, 327, 329, 330, 332
Equipment list · 22
Evaluation · 25, 39, 44, 48, 255, 258, 259
assumptions · 39, 40, 45, 46, 55, 56, 57
benefits · 39
costs
energy · 39
raw material · 39
costs
waste management · 39
current practices · 39
describe opportunity · 39
determining feasibility · 39
economic benefits · 39
energy conservation calculations · 47
energy costs · 12, 40, 52, 61, 227, 247, 248, 262, 290
equipment · 39
example · 47
impacts · 4, 20, 25, 26, 39, 40
Internal Rate of Return · 48
Net Present Value · 48
operations · 3, 12, 19, 23, 25, 26, 39, 40, 43, 61, 63, 67, 68, 72, 73, 74, 75, 76, 79, 230, 234, 247, 250, 252, 254, 258, 298
Payback period · 48
pollution prevention calculations · 47
pollution prevention calculations · 46
procedures · 39
raw material
consumption · 47
raw materials · 2, 15, 19, 20, 47, 78, 81, 84
technical · 47
technical evaluation · 47
technical feasibility · 39
Evaluation economic · 48
Evalution
energy conservation calculations · 45

F

Fan · 7, 8, 218, 219, 220, 224, 247, 248, 269, 270, 271, 282, 286, 303, 305, 306, 307, 313, 314, 315, 316, 317, 329
ducting · 248, 317
efficiency · 7, 73, 80, 83, 214, 215, 216, 217, 220, 222, 223, 229, 230, 231, 234, 235, 236, 238, 240, 241, 242, 244, 248, 251, 252, 253, 257, 258, 262, 263, 264, 269, 271, 275, 276, 278, 282, 285, 292, 295, 296, 297, 298, 299, 303, 304, 305, 306, 315, 316, 327, 328, 329, 331
horsepower · 214, 216, 218, 219, 220, 262, 264, 266, 267, 269, 270, 271, 272, 277, 278, 292, 294, 303, 305, 313, 314, 317, 329
inlet vane control · 270
reduced speed · 218, 220, 265
variable speed · 7, 219, 220, 221, 243, 263, 264, 267, 271, 286
volume control · 7, 270, 271

Notes

Notes

flue gas · 54, 74, 235, 241, 245, 246, 250, 252
Fossil fuel · 4, 72, 254
Fuel oil · 12, 14, 21, 32, 43
bill · 43
consumption · 43
cost · 43
energy conservation · 3, 46, 62, 72, 234, 242, 243, 247, 254, 258
example · 43
rates · 71, 244, 253, 254, 258
types · 18, 21, 43, 63, 74, 245, 247, 253, 254
Fuel Oil · 22, 32
Furnace · 6, 21, 43, 72, 78, 240, 245, 246, 250, 251, 252, 253
covers · 6, 77, 82, 241, 253
efficiency · 73, 80, 83, 234, 235, 236, 238, 240, 241, 242, 244, 248, 251, 252, 253, 257, 258, 303, 304, 305, 306, 315, 316, 327, 328, 329, 331
pressure controls · 252

G

Garment insulation values · 322
Gas bill
metering · 252
rate schedule · 42, 66, 69, 70, 71

H

Hazardous waste · 14, 18, 20, 22, 24, 43, 44, 47, 54, 75, 95, 96, 99, 106, 108, 109, 110, 112, 140, 148, 150, 154, 158, 163, 164, 165, 173, 174, 176, 178, 186, 188, 189, 190, 192, 193, 194, 195, 197, 205, 206
containers · 40, 44, 47, 79, 80, 81, 84, 91, 92, 94, 96, 97, 98, 99, 100, 102, 103, 107, 122, 130, 172, 177, 203, 208
disposal fee · 44
labor · 3, 12, 44, 48, 91, 96, 97, 98, 100, 101, 102, 103, 106, 114, 116, 137, 140, 143, 192, 195, 208
transportation · 12, 44, 61, 73, 102, 103, 108, 147, 155
Heat · 6, 7, 8, 36, 61, 72, 73, 75, 78, 234, 235, 236, 237, 238, 239, 240, 242, 243, 244, 245, 246, 247, 248, 249, 250, 252, 253, 254, 256, 257, 260, 272, 275, 277, 279, 280, 281, 286, 287, 288, 289, 290, 291, 292, 293, 295, 296, 297, 298, 299, 300, 303, 306, 307, 308, 310, 314, 315, 319, 320, 321, 323, 328, 329, 330, 331, 332
case study
install infrared radiant heaters · 9
Heat exchanger · 239, 240, 245, 246, 277, 281, 288, 293, 315, 331, 332
plate · 79
rotary · 246, 276
tube · 235, 245, 246, 248, 293, 331
Heat gain · 297, 298
Heat loss · 8, 243, 247, 297, 299, 300, 328, 329
Heat pipe · 245, 246, 331
Heat recovery system · 244, 245, 330, 331
Heat recovery systems · 244, 245
Heat transfer · 235, 244, 246, 247, 249, 286, 293, 297, 298, 300, 303, 331
Heat wheel · 246
Heating · 6, 8, 21, 40, 45, 46, 54, 61, 63, 72, 73, 236, 239, 241, 243, 244, 245, 246, 247, 248, 249, 250, 252, 255, 257, 259, 260, 272, 292, 295, 297, 299, 302, 303, 304, 307, 308, 309, 310, 313, 317, 318, 324, 327, 328, 330, 331, 332
applications · 6, 8, 68, 83, 244, 246, 248, 249, 250, 251, 253, 254, 262, 281, 287, 290, 291, 296, 298, 299, 300, 305
comfort · 6, 68, 246, 247, 249, 303, 304, 305, 307, 310, 313, 315, 317, 319, 320, 321, 323
electric · 61, 62, 65, 66, 67, 69, 71, 72, 78, 238, 248, 249, 250, 253, 257, 258, 262, 264, 271, 287, 291
process · 6, 8, 45, 57
radiant · 6, 247, 249, 250, 323
types · 18, 63, 74, 245, 247, 253, 254, 262, 264, 267, 269, 272, 278, 281, 282, 290, 299, 303, 304, 319, 324, 331
Heating systems · 6, 247, 249
Humidity · 3
relative · 4
HVAC · 8, 11, 303, 315, 316, 317, 318, 319
comfort · 8
components · 8
controls · 8
distribution system · 8
filters · 8
humidifiers · 8
HVAC systems · 8, 315, 316, 317, 318

I

Incineration · 15, 35
catalytic · 204
thermal · 114, 123, 130, 131, 138, 144, 146, 165, 186, 194, 196, 204
Industrial assessment (*See* Assessment) · 1, 2, 11, 12, 75
Industrial assessment (*See* Assessment) · 1, 12, 14, 17
Industrial operations · 4, 5, 87
chemical etching · 79, 148, 149, 150, 152, 153, 154, 172
cleaning and degreasing · 74, 116, 117, 129, 132, 172, 185
housekeeping · 15, 24, 47, 75, 93, 113, 327
materials management · 93, 94, 103
metal working · 78, 110, 112, 114, 115, 116
office · 5, 74, 87, 88, 89, 90, 94, 177, 210, 226, 227, 230, 231, 248, 258, 307
paint application · 172, 173, 179, 184
paint removal · 74, 173, 184, 185, 186, 188, 193, 194, 198
plating · 79, 80, 81, 104, 155, 156, 158, 159, 161, 164, 167, 168, 169, 170, 190, 205, 206, 279
printing · 29, 47, 54, 56, 74, 79, 90, 121, 128, 198, 199, 200, 201, 202, 203, 204, 205, 206, 207, 208, 209
waste water treatment · 81, 83

Installation
costs · 47
Insulation · 8, 15, 21, 72, 296, 297, 298, 299, 300, 302
building · 8, 41, 71, 89, 92, 94, 95, 136, 246, 247, 248, 249, 254, 296, 307, 308, 324, 327, 328, 331
calcium silicate · 300
cold water · 296
dock doors · 299
glass fiber · 300
hot water · 8, 73, 89, 139, 177, 234, 243, 246, 247, 255, 287, 288, 295, 296, 297, 303
injection mold barrels · 301
low cost · 290
performance · 57, 63, 94, 104, 113, 115, 117, 119, 124, 131, 137, 144, 145, 153, 173, 174, 177, 186, 187, 198, 240, 241, 249, 257, 286, 294, 295, 296, 298
polyisocyanurate · 300
process equipment · 117, 120, 121, 124, 129, 185, 197, 246, 300
refrigeration · 8
standards · 74, 95, 98, 193, 212, 305, 306, 308, 310, 318, 330
steam · 8, 20, 24, 46, 61, 67, 72, 73, 82, 89, 107, 144, 146, 234, 235, 236, 242, 243, 244, 247, 248, 254, 255, 256, 257, 258, 287, 288, 289, 290, 291, 295, 296, 297, 303, 305, 328
tanks · 8, 77, 80, 81, 82, 83, 97, 116, 124, 132, 139, 141, 143, 145, 151, 156, 167, 168, 169, 170, 177, 185, 205, 206, 211, 243, 296, 298, 300
thickness · 165, 296, 297
Internal Rate of Return (IRR) · 25, 50, 51, 52, 54, 58, 59

K

Kerosene · 46

L

Lamp · 63, 227, 228, 229, 230, 231, 232
fluorescent · 63, 64, 226, 227, 228, 229, 231, 232
high energy discharge · 232
incandescent · 227, 231
Liability · 1, 12, 45, 52, 53, 75, 107, 146, 147, 148, 170, 171
Life Cycle Analysis · 4, 48, 51
Life Cycle Costing · 4, 48, 51, 52
raw materials · 52
Lighting · 46, 63, 223, 227, 230, 231, 233
light meter audit · 226
standards · 74, 223, 226, 229
technologies · 74, 79, 80, 223
Load · 6, 22, 41, 61, 62, 64, 65, 66, 67, 68, 70, 71, 72, 214, 215, 216, 217, 218, 220, 221, 222, 227, 242, 254, 257, 258, 259, 263, 272, 277, 278, 284, 285, 292, 293, 294, 295, 298, 300, 307, 308, 309, 310, 312, 313, 314, 316, 327, 328, 329
essential · 68, 262, 296, 300
refrigeration · 7, 258, 259, 264, 281, 287, 290, 291, 292, 293, 294, 295, 298, 304, 307, 310
Load factor · 66, 67, 72, 272, 278
savings · 61, 62, 64, 66, 68, 214, 215, 217, 218, 219, 220, 221, 222, 223, 226, 227, 228, 229, 230, 231, 241, 242, 243, 244, 245, 248, 252, 253, 257, 258, 262, 263, 264, 265, 267, 270, 271, 272, 274, 275, 277, 278, 279, 285, 286, 287, 291, 293, 294, 295, 297, 298, 299, 301, 307, 308, 309, 310, 311, 312, 313, 314, 328, 331
system analysis · 265

M

Maintenance · 48
costs · 48
Material substitution
case study
chemical substitution in pulp and paper manufacturing · 33
case study
install an automated aqueous cleaner · 13
metal working fluid substitution · 11
replacing chemical stripping with plastic media blasting · 29
water-borne paint as a substitute for solvent-based coatings · 25
Mechanical refrigeration · 8, 281, 287, 290, 295
compression · 234, 290, 295
condensing pressure · 292, 294
condensing temperature · 292
efficient use · 8, 72, 247
evaporator temperature · 8, 291, 294
heat recovery · 244, 245, 246, 254, 257, 295
hot gas bypass · 8
multiple compressors · 8, 291
pressure · 8
Metalworking · 111, 113
process flow diagram · 18
Motor · 5, 6, 8, 45, 62, 63, 64, 65, 66, 84, 214, 215, 216, 217, 218, 220, 221, 222, 223, 224, 225, 262, 264, 265, 271, 276, 280, 281, 282, 286, 302, 316, 317
synchronous · 65, 66, 221
variable frequency AC · 6, 220
Motors · 46

N

National Pollutant Discharge Elimination System · 4, 74
Natural gas · 6, 12, 14, 21, 32, 40, 46, 54, 61, 71, 72, 241, 245, 248, 249, 250, 251, 254, 257
consumption · 42, 43, 61, 62, 67, 70, 72, 239, 243, 245, 251, 254, 259, 305, 329
industrial use · 42
service period · 42
Natural Gas · 32

Notes

Notes

Natural gas bill · 42, 43
example · 42
industrial use · 42
rates · 42
sample · 42
Natural Resources · 52
Net present value · 25, 50
Net Present Value · 49, 57
Nonhazardous waste
containers · 40, 44, 47, 79, 80, 81, 84, 91, 92, 94, 96, 97, 98, 99, 100, 102, 103, 107, 122, 130, 172, 177, 203, 208
disposal fee · 75
labor · 3, 12, 44, 48, 91, 96, 97, 98, 100, 101, 102, 103, 106, 114, 116, 137, 140, 143, 192, 195, 208, 241
transportation · 12, 44, 61, 73, 102, 103, 108, 147, 155
NPDES (*See* National Pollutant Discharge Elimination System) · 4, 74

O

Opportunity · 45
analysis · 4, 18, 19, 21, 24, 25, 39, 40, 45, 47, 48, 49, 52, 53, 67, 105, 109, 123, 130, 131, 220, 235, 241, 244, 250, 252, 255, 257, 259, 263, 285, 299, 305
benefits · 1, 3, 11, 12, 22, 26, 45, 50, 52, 62, 68, 93, 101, 104, 107, 117, 124, 126, 127, 128, 135, 137, 140, 141, 154, 161, 167, 172, 173, 180, 186, 189, 192, 194, 196, 204, 208, 212, 216, 247, 252, 254
economic · 49
Internal Rate of Return (IRR) · 4, 25, 48, 50, 52, 57, 58
economic · 3, 12, 24, 25, 39, 48, 50, 51, 52, 53, 54, 57, 66, 89, 93, 189, 208, 210, 254, 294, 300
Life Cycle Cost (LCC) · 4, 48, 51, 52
Net Present Value · 48
Payback period · 48
Total Cost Accounting · 4, 48, 51, 52
evaluations · 3, 4, 11, 12, 22, 24, 25, 39, 44, 45, 47, 48, 54, 57, 95, 254, 255, 258, 259, 298, 330, 331
examples (*See* Energy Conservation Opportunities and Pollution Prevention Opportunities) · 218, 234, 311, 329
identification · 75, 215
payback · 25, 49, 53, 54, 55, 57, 172, 186, 216, 228, 229, 231, 259, 264, 272, 274, 277, 278, 286, 299, 301, 330
pollution prevention calculations · 47

P

Paint application · 74, 80, 81, 144, 148, 172, 173, 176, 179, 184
transfer efficiency · 172, 179, 180, 181, 182, 184
Payback period · 25, 48, 49, 55, 56, 57, 172, 186
peak demand · 66, 67, 68, 72
Peak demand · 67
pesticide management · 14
Plant survey
pumps · 7, 61, 77, 83, 236, 262, 263, 264, 265, 267
techniques · 217, 220, 222, 254, 263
pollution prevention · 1, 2, 3, 5
Pollution prevention · 1, 2, 3, 4, 5, 9, 11, 12, 13, 14, 15, 17, 19, 20, 22, 23, 24, 25, 26, 37, 39, 45, 46, 47, 48, 49, 51, 53, 62, 73, 75, 87, 93, 101, 104, 105, 110, 112, 116, 117, 118, 124, 126, 127, 135, 138, 139, 147, 148, 149, 150, 155, 172, 173, 174, 176, 179, 184, 185, 192, 198, 204, 212
goals · 2, 13, 14, 23, 52, 99, 155
hierarchy · 87, 93, 100, 105, 112, 117, 172, 185, 204, 212
methods · 7, 37, 54, 57, 77, 79, 81, 84, 89, 103, 122, 124, 131, 135, 143, 144, 155, 156, 158, 161, 162, 163, 164, 165, 167, 168, 172, 174, 178, 180, 185, 186, 193, 198, 202, 209, 212
policy · 2, 13, 95, 101, 104
program · 2, 4, 12, 13, 14, 66, 71, 74, 78, 82, 84, 89, 90, 92, 93, 94, 95, 101, 104, 105, 107, 108, 109, 113, 194
regulation · 74
review · 3, 11, 20, 22, 47, 67, 68, 172, 186, 212
tool · 1, 3, 11, 12, 14, 15, 24, 48, 51, 52, 75, 111, 112, 200
Pollution Prevention Act · 2, 15, 60, 39
Pollution prevention opportunities · 1
case study
chemical substitution in pulp and paper manufacturing · F-33
closed-loop plating bath recycling process · F-23
construction and demolition waste recycling · F-3
efficient rinsing set-up for chemical etching · F-17
high volume low pressure (hvlp) paint system · F-27
install an automated aqueous cleaner · F-13
maintenance fluid recycling · F-9
metal working fluid substitution · F-11
oil analysis program · F-7
on-site recycling · F-35
packaging reuse · F-5
plating process bath maintenance · F-21
recycling of cleaner through filtration · F-15
replacing chemical stripping with plastic media blasting · F-29
waste reduction in the chromate conversion process · F-19
water-borne paint as a substitute for solvent-based coatings · F-25
white water and fiber reuse in pulp and paper manufacturing · F-31
housekeeping · 15, 24, 47, 75, 93, 113
inventory control · 15, 106
material substitution · 57, 105, 173
training · 2, 13, 15, 23, 47, 48, 55, 57, 80, 82, 96, 101, 104, 105, 113, 146, 161, 165, 167, 172, 181, 184, 191
Pollution Prevention opportunities
equipment modifications · 133

Pollution Prevention Opportunities · 36, 37, 38, 87, 93, 105, 112, 117, 149, 156, 172, 185, 204, 212
POTW · 210
Power demand control · 71
Power factor · 41, 63, 64, 65, 66, 68, 70
correction · 63, 65
improvements · 66
Propane · 46
Psychrometrics · 1
Psychrometry · 305
Pump · 262, 263, 264, 265, 266, 267, 268, 282
affinity laws · 264, 265, 266
centrifugal · 7, 262, 263, 264, 265, 269, 271, 276, 281, 290, 291, 293, 294
curve · 67, 263, 265, 266, 267, 271, 294
energy savings · 7, 262, 272, 274, 276, 277, 279, 286, 290, 296, 297, 298, 299, 301
energy usage · 69, 278
installation · 66, 68, 264, 269, 294, 296, 300
power requirements · 65, 285, 286, 293, 294
throttling valve · 277

R

Raw material · 35
usage · 35
Raw materials · 22, 29, 40, 53
RCRA · 75, 186, 189
Recycling · 15, 52, 75, 77, 82, 87, 91, 92, 93, 94, 98, 99, 100, 101, 102, 103, 105, 107, 108, 109, 110, 112, 114, 115, 116, 117, 119, 126, 132, 143, 144, 145, 146, 147, 149, 154, 155, 169, 170, 171, 172, 184, 185, 186, 190, 191, 192, 198, 204, 207, 208, 209, 210, 212
case study
closed-loop plating bath recycling process · 23
construction and demolition waste recycling · 3
maintenance fluid recycling · 9
on-site recycling · 35
packaging reuse · 5
recycling of cleaner through filtration · 15
solvent reduction in commercial printing · 38
white water and fiber reuse in pulp and paper manufacturing · 31
References · 9
aqueous cleaning · 81
chemical etching · 79
machining · 81
painting · 74, 80, 81
plating · 79, 80, 81
printing · 74, 79
solvent cleaning · 80, 81
surface coating · 79
Refrigeration (See absorption or mechanical refrigeration) · 46, 259, 287, 289, 290, 291, 293, 295
Regulations · 4, 74
Resources · A-9
energy conservation · A-3, A-9, A-46
Energy conservation · A-2
EPA regional offices · A-1
Pollution prevetnion publications · A-3
state · A-9
technology transfer information
nonprofit
state · A-9
state · A-9
technology transfer information sources
government
national · A-9
regional · A-11
state · A-12
non-profit
national · A-38
state · A-38
private company
international · A-40
professional association
state · A-42
professional association
international · A-40
national · A-41
trade association
international · A-42
trade association
national · A-43
state · A-51
university
national · A-55
state · A-56
technology transfer information sources · A-9
university · A-9
universitystate · A-9
websites
federal government sites ·A-64
technology transfer · A-65
academic resource centers · A-64
affirmative procurement ·A- 67
cleaner production · A- 67
compliance assistance · A- 67
energy conservation · 3, 9, A- 46
energy conservation · A- 65
environment, health, and safety · A- 65
ISO 14000 · A- 66
life cycle · A- 49
life cycle analysis · A- 67
plating/finishing · A- 66
pollution prevention · 3, 9
material substitution · A- 59
recycling · A- 59
technical associations, technolgy transfer, and industry · A- 60
pollution prevention · A- 57
printing · A- 66
state · A- 9
state internet programs · A- 62
reuse · 15, 29
Reuse · 15, 77, 78, 80, 81, 82, 83, 84, 91, 100, 101, 102, 107, 115, 126, 139, 141, 144, 154, 156, 209, 212
Reuse (*See* Recycling) · 24, 78, 79, 83, 84, 90, 93, 100, 102

Notes

Notes

S

Sanitary and storm sewer · 44, 83, 202, 203, 210, 212
discharge fee · 44
labor · 3, 12, 44, 48, 91, 96, 97, 98, 100, 101, 102, 103, 106, 114, 116, 137, 140, 143, 192, 195, 208
treatment · 43, 44, 72, 74, 75, 78, 80, 83, 88, 104, 124, 126, 134, 135, 154, 156, 168, 169, 170, 171, 205, 210, 211, 212
SIC · 76, 77, 78, 79, 80, 81, 82, 83, 84, 280
Solid waste · 4, 18, 44, 190
labor · 44
tipping fees · 44
transportation · 12, 44, 61, 73, 102, 103, 108, 147, 155
transportation costs · 44
solidification · 15
Solvent · 35, 37, 55, 56, 81, 112, 116, 122, 126, 127, 138, 140, 145, 158, 177, 186, 188, 203, 213
boiling points · 126, 128
distillation · 15, 51, 109, 110, 120, 124, 126, 127, 138, 144, 145, 146, 156, 186, 187, 198
halogenated · 116, 124, 144, 145, 146, 203
recycling · 75, 77, 82, 87, 91, 92, 93, 94, 98, 99, 100, 102, 103, 105, 107, 108, 109, 110, 112, 114, 115, 116, 117, 119, 126, 132, 144, 145, 146, 147, 149, 154, 170, 172, 184, 185, 186, 190, 191, 192, 198, 204, 207, 208, 209, 212
Source reduction · 2, 15, 87, 93, 105, 204
case study
efficient rinsing set-up for chemical etching · 17
high volume low pressure (hvlp) paint system · 27
oil analysis program · 7
plating process bath maintenance · 21
Source Reduction · 75, 87, 88, 93, 94, 105, 112, 113, 117, 149, 150, 172, 173, 179, 185, 198, 204, 212
Space heating · 244
Stabilization · 15
Stratification · 6, 247, 248

T

Temperature · 20, 21, 236, 250, 284, 285, 287, 289, 292, 294, 296, 312, 330
thermal · 6, 8, 61, 73
Thermodynamics · 280
Thermoenergy storage systems · 7
high spot evaluation · 258
Total Cost Accounting · 48, 51, 52, 53, 54
Toxic Release Inventory · 14
Treatment · 87, 158, 169, 210
TRI (*See* Toxic Release Inventory) · 14

V

Variable speed drive · 218
Ventilation · 47, 63, 244, 313, 318, 327
design · 236, 240, 248, 252, 254, 282, 285, 286, 292, 293, 294, 295, 296, 303, 305, 307, 308, 309, 310, 313, 315, 316, 317, 318, 319, 329, 330
heat recovery · 244, 245, 246, 254, 257, 295, 330, 331
losses · 7, 62, 63, 66, 70, 83, 84, 240, 241, 243, 252, 281, 282, 292, 304, 329
air-water mixture · 328
exhaust · 7, 8, 68, 235, 244, 245, 246, 247, 254, 255, 257, 258, 290, 313, 315, 327, 328, 329, 330, 331, 332
room air · 327, 330
VOC · 79, 80, 81, 84, 119, 129, 173, 174, 176, 177, 178, 179, 204

W

Waste · 3, 11, 13, 20, 22, 24, 43, 44, 53, 55, 56, 72, 73, 74, 75, 76, 77, 78, 79, 80, 81, 82, 83, 84, 87, 88, 91, 92, 93, 98, 99, 100, 104, 106, 112, 115, 116, 149, 156, 158, 159, 161, 162, 172, 185, 189, 190, 191, 192, 196, 202, 203, 205, 208, 209, 210, 212, 213, 244, 256, 272, 277
aqueous · 45, 77, 81, 117, 118, 119, 124, 126, 132, 134, 135, 139, 140, 141, 143, 144, 145, 148, 155, 169, 175, 185, 186, 188
assembly · 63, 84, 96, 186, 253
coolant · 78, 100, 109, 112, 114, 115
cutting fluid · 81, 112, 129
disposal · 12, 15, 20, 40, 43, 44, 47, 48, 52, 53, 55, 56, 57, 62, 73, 74, 75, 90, 91, 92, 96, 97, 98, 99, 100, 101, 102, 103, 106, 108, 109, 110, 114, 116, 119, 123, 124, 131, 132, 139, 141, 143, 147, 154, 156, 169, 170, 171, 172, 176, 178, 186, 188, 190, 191, 193, 194, 196, 203, 204, 208, 209
fastening · 84
food processing · 243, 244
generation · 12, 13, 35, 45, 47, 55, 61, 63, 67, 72, 73, 74, 75, 78, 88, 90, 95, 96, 99, 100, 101, 104, 105, 107, 109, 114, 115, 147, 148, 150, 156, 166, 180, 181, 182, 183, 186, 192, 197, 228, 235, 236, 240, 253, 257, 258, 320
generator · 92, 99, 142, 146, 147, 170, 171, 222, 254, 257, 258, 289
hazardous · 1, 14, 15, 17, 20, 22, 24, 43, 44, 47, 54, 55, 62, 75, 77, 78, 91, 95, 96, 98, 99, 100, 104, 106, 108, 109, 110, 112, 113, 116, 117, 118, 124, 131, 140, 148, 150, 153, 154, 155, 156, 163, 164, 165, 172, 173, 174, 176, 177, 179, 185, 186, 188, 189, 190, 191, 192, 193, 194, 195, 197, 203, 204, 205, 206, 209, 212
industries · 111, 116, 154, 155, 156, 182, 197, 218, 250, 253
inks · 29, 54, 57, 79, 121, 128, 129, 198, 199, 202, 203, 204, 207, 208
joining · 84
management · 20, 40, 43, 44, 61, 62, 70, 74, 75, 95, 101, 103, 104, 107, 112, 158, 223, 226, 227, 254
management costs · 39, 43
material handling · 84, 279
metalworking · 111, 112, 113, 114, 115, 129
minimization · 75, 95, 101, 104, 149, 150, 156

nonhazardous · 117, 118, 206
oils · 77, 78, 79, 110, 111, 112, 113, 114, 115, 116, 119, 121, 123, 128, 129, 131, 132, 135, 143, 144, 145, 150, 153, 155, 169, 192, 203, 204, 207, 209, 210
operations · 3
paint · 74, 76, 77, 80, 81, 99, 107, 111, 119, 124, 128, 129, 148, 151, 159, 172, 173, 176, 179, 181, 182, 184, 185, 186, 187, 188, 189, 190, 191, 192, 193, 194, 195, 196, 197, 198
paint stripping · 185, 186, 187, 188, 189, 190, 193, 194, 195, 196
painting · 74, 80, 81, 144, 148, 173, 176, 184, 223
printing · 29, 54, 56, 74, 79, 90, 121, 128, 198, 199, 200, 201, 202, 203, 204, 205, 206, 207, 208, 209
process · 45, 57
process description · 3, 18, 19, 20, 28, 87, 93, 104, 110, 116, 148, 155, 172, 179, 184, 198
processes · 43, 61, 71, 72, 73, 74, 76, 111, 114, 116, 119, 139, 140, 141, 142, 148, 150, 155, 156, 158, 159, 163, 164, 167, 169, 170, 172, 173, 185, 193, 197, 199, 202, 205, 206, 210, 212, 234, 246, 250, 253, 276, 278, 281, 287, 303, 305, 307
quantities · 74, 87, 95, 104, 115, 128, 181, 196, 210, 234
record keeping · 4, 147
reduction · 12, 14, 25, 52, 55, 62, 63, 66, 67, 68, 75, 79, 90, 93, 98, 99, 109, 121, 136, 137, 150, 156, 161, 165, 167, 168, 172, 185, 194, 197, 206, 221, 227, 228, 229, 230, 235, 242, 243, 245, 247, 258, 263, 264, 267, 270, 271, 272, 292, 294, 312, 313, 314, 316, 328, 329, 332
regulations · 1, 4, 12, 25, 73, 74, 75, 99, 101, 104, 108, 174, 188
screen printing · 26, 29, 54, 198, 199, 201, 202, 207
solid · 14, 44, 47, 72, 73, 74, 75, 87, 90, 91, 92, 98, 106, 107, 108, 109, 113, 115, 144, 145, 149, 163, 177, 179, 185, 193, 196, 197, 202, 203, 208, 220, 257
solvents · 15, 29, 77, 79, 80, 81, 82, 116, 117, 119, 120, 121, 123, 124, 126, 127, 128, 129, 131, 132, 140, 141, 143, 144, 145, 146, 147, 156, 158, 164, 170, 172, 174, 175, 176, 177, 178, 179, 185, 186, 188, 190, 198, 199, 202, 203, 206, 207, 332
streams · 18, 107, 167, 170, 188, 192, 246, 251, 281, 295, 310, 331
surface cleaning · 155
surface coating · 79, 194
surface preparation · 173, 195, 196
thinners · 144, 172
transportation costs · 44
treatment · 1, 15, 43, 44, 72, 74, 75, 78, 80, 83, 88, 104, 124, 126, 134, 135, 154, 156, 168, 169, 170, 171, 205, 210, 211, 212, 235, 242, 243, 258, 293
types · 5, 18, 63, 74, 87, 96, 105, 108, 119, 124, 126, 140, 142, 144, 146, 148, 149, 170, 173, 179, 180, 181, 185, 189, 190, 191, 194, 197, 198, 200, 202, 210, 211, 216, 218, 228, 229, 231, 232, 245, 247, 253, 254, 262, 264, 267, 269, 272, 278, 281, 282, 290, 299, 303, 304, 319, 324, 331
wastewater · 20, 74, 88, 95, 104, 110, 120, 122, 123, 126, 127, 131, 140, 141, 143, 149, 152, 153, 154, 156, 162, 166, 167, 170, 185, 186, 192, 193, 194, 197, 203, 204, 205, 206, 209, 210, 211, 212, 330
wastewater treatment · 88, 95, 104, 110, 141, 152, 156, 162, 170, 193, 194, 203, 211, 212
Waste minimization · 192
case study
waste reduction in the chromate conversion process · 19
Wastewater · 110, 134, 135, 140, 141, 143, 156, 190, 192, 193, 194, 210
activated sludge · 212
oxidation · 111, 114, 165, 168, 209, 211, 238
treatment · 43, 44, 72, 74, 75, 78, 80, 83, 88, 104, 124, 126, 134, 135, 154, 156, 168, 169, 170, 171, 205, 210, 211, 212, 235, 242, 243, 258, 293
Water
usage · 14
Water conservation · 88
Water vapor · 2
amount in air · 3

Notes