NASA CASE NO. LAR 14898-1

PRINT FIG. 1

NOTICE

The invention disclosed in this document resulted from research in aeronautical and space activities performed under programs of the National Aeronautics and Space Administration. The invention is owned by NASA and is, therefore, available for licensing in accordance with the patent licensing regulations applicable to U.S. Government-owned inventions (37 CFR 404.1 et seq.).

To encourage commercial utilization of NASA-owned inventions, it is NASA policy to grant licenses to commercial concerns. Although NASA encourages nonexclusive licensing to promote competition and achieve the widest possible utilization, NASA will provide the necessary incentive to the licensee to achieve early practical application of the invention.

Address informational requests for this invention to the **Technology Applications Team, NASA Langley Research Center, Code 200, Hampton, Virginia 23681-0001.**

Address applications for license to the **Patent Counsel Office, Mail Stop 212, 3 Langley Boulevard, Hampton, Virginia 23681-0001.**

Serial No.: 08/413,301
Filed: 03/30/95

LaRC

(NASA-Case-LAR-14898-1) COMPOSITE SANDWICH STRUCTURE AND METHOD FOR MAKING SAME Patent Application (NASA. Langley Research Center) 32 p

N95-26764

Unclas

G3/24 0049666

PAT. APPL. IN-24 49666 P-32

LAR-14898-1 **AWARDS ABSTRACT**

COMPOSITE SANDWICH STRUCTURE AND METHOD FOR MAKING SAME

The present invention relates in general to light weight composite sandwich structures, and specifically to improved fabrication of thermally stable optical bench sandwich structures used as substructure for and critical to the performance of highly precise instruments such as space telescopes, interferometric optics, and reflector panels.

According to the invention, a core comprising multi-ply laminate ribs separated by voids is made as an integral unit in one single curing step. Tooling blocks corresponding to the voids are first wrapped by strips of prepreg layup equal to one half of each rib laminate so a continuous wall of prepreg material is formed around the tooling blocks. The wrapped tooling blocks are next pressed together laterally, like tiles, so adjoining walls from two tooling blocks are joined. The assembly is then cured by conventional methods, and afterwards the tooling blocks are removed so voids are formed. The ribs can be provided with integral tabs forming bonding areas for face sheets, and face sheets may be co-cured with the core ribs.

The new core design can be built with quasi-isotropic properties and zero coefficient of thermal expansion. Cores, and corresponding sandwich structures according to the invention have exceptional mechanical strength and integrity. The manufacturing process requires no cutting and fitting of ribs, nor any secondary bonding of rib junctions, so the manufacturing process is very cost effective, highly repeatable, and does not require highly skilled workers.

Inventor: Charles J. Magurany
Home address: 29600 Island View Drive #204
Rancho Palos Verdes, CA 90275
SS#: [redacted]
Employer: Lockheed Engineering and Space Company
Evaluator: David E. Bowles

Serial No.: 08/413,301
Filed: March 30, 1995

COMPOSITE SANDWICH STRUCTURE AND METHOD FOR MAKING SAME

Origin of the Invention

The invention described herein was made in the performance of work under a NASA Contract and is subject to the provisions of Section 305 of the National Aeronautics and Space Act of 1958, as amended, Public Law 85-568 (72 Stat. 435; 42 USC 2457).

Background of the Invention

Field of the Invention

This invention relates in general to light weight composite sandwich structures, and specifically to improved fabrication of thermally stable optical bench sandwich structures, used as substructure for highly precise instruments such as space telescopes, interferometric optics, and reflector panels.

Description of the Related Art

There are two types of construction methods currently used to fabricate composite optical bench sandwich structures: honeycomb core and discrete (or eggcrate) rib-core. For space applications the discrete rib-core design has several advantages over honeycomb cores, as is well known to those skilled in the art.

The prior art discrete rib-core approach relies upon a secondary assembly and adhesive joint bonding of pre-cured and precision machined

graphite/epoxy laminate ribs. The ribs are positioned to form a grid/core structure which is then bonded to face skins. The rib spacing and geometry is customized to meet the required loading conditions and fitting interfaces.

The fabrication of a discrete rib-core starts with cutting of graphite/epoxy prepreg tape from a roll into single plys of predetermined lengths and orientation angles. For thermally stable space applications this usually requires ultra-high modulus (UHM) fiber/epoxy plys oriented and stacked into a quasi-isotropic (QI) layup. A composite using QI layup is intended to approximate a structure having equal mechanical and physical properties in all directions within the plane of the laminate.

For precision composite optical benches, zero (or near zero) coefficient of thermal expansion (CTE) and zero moisture strain are desired design properties. It has been calculated that a QI layup using UHM P75 fiber/934 epoxy, at approximately 51% fiber by volume, will achieve a near zero in-plane CTE. A suitable QI layup would comprise 8 plys having fiber orientations: [0,45,90,-45,-45,90,45,0].

The dimensions of the plys used to layup the panel are calculated to ensure that sufficient material will be cured to meet the requirements for the quantity of ribs that will be needed to assemble the core structure. After layup, the panel is processed into a cured flat laminate by conventional autoclave methods.

After cure, the panel must be accurately and precisely machined into strips having the required dimensions for the final core structure. After the strips are cut, vertical joint location slots of prescribed length, width and location must be accurately and precisely machined into each of the ribs. The number of slots machined depends upon the dimensions of the final core structure.

Much of the design strength and structural integrity of the rib-core

structure will depend upon the joint (or slot-to-slot) fastening or bonding method used. There are three basic graphiteto-graphite joint types that have been used for optical benches: unclipped butt joints, clipped butt joints, and mortise and tenon joints.

After the ribs have been positioned into the overall core structure, they must be structurally fixed into place, at the joint interfaces, through adhesive bonding. Before adhesive is applied, the ribs of the assembly, still free to move depending upon the tightness of the joint slot overlaps, must be uniformly held in place in a manner that enables correct overall rib alignment and orthogonality. Once alignment is achieved, a bead of an appropriate adhesive is applied to the four interfaces of each joint, i.e. 4 beads per joint. The adhesive is cured by oven or at room temperature, depending on the adhesive used. Afterwards, joint reinforcing hardware may be installed to improve strength characteristics.

The necessary, accurate and precise machining of the cured laminate to produce the separate ribs and the machining to produce multiple slots for each rib, is a costly, time consuming activity which requires skilled labor. Uncorrected changes or wear in the cutting equipment over a period of time will cause variation in slot sizes and rib dimensions which can affect variations in the thermal/mechanical properties of the core. If proper tolerances are not met, the parts must either be reworked or completely remanufactured.

The consistency of the process is dependent upon the availability of skilled/experienced labor. The repetitive hand-application of adhesive to each and every joint is tedious and even the most skilled technician is prone to produce work having variations. Correct alignment of the ribs is critical to the core structure performance and must be maintained while the adhesive is applied and excess removed. Bonding tool jigs, required to maintain rib alignment, interfere with the technicians' access to the

joint bonding locations, making this process especially cumbersome. Given the high degree of artistry required, scale-up of this process is difficult, requiring longer lead-times and, likely, rework.

Ideally, the core should have the same QI properties as the laminate face sheets. This would ensure that the optical bench sandwich structure will respond to mechanical and thermal loads in a uniform manner (i.e., zero CTE throughout the planes of the ribs of the core, as well as within the planes of the bonded face sheets). Also, an efficient design/process will enable localized loads to be distributed over the entire structure, thus reducing stresses and cause for failure at any one point.

In the prior art process, discontinuities in the rib laminates, caused by slotting, disrupt the normal load carrying capabilities of the ribs. The loads can be in tension, compression, or shear. The adhesive, without fiber reinforcement, must act to transfer and distribute these loads among the ribs at the joint locations. The proper design use of adhesives is to carry mechanical loads in shear as adhesive interfacial tension properties are typically very low. The rib-core process/design does not exclude the joint adhesive from carrying significant interfacial tension loads. Also, the loads are carried along a thin bondline (four at each joint). This limits the ability of the joint to transfer/distribute loads to the rib structure, causing higher stresses to occur at the weaker joint/adhesive interfaces. In accordance with the rib-core design/process, load must be carried/transferred at a finite number of joint locations. The fewer the number of the joints in the core structure, the higher the stresses at each joint, and the weaker the resulting core structure. To compensate for the inherent weakness in the rib-core design/process, secondary "butt joint clips" and other methods have been applied to strengthen the adhesive joint interfaces. These methods lead to additional weight and significant time and cost increases in labor and

materials. In addition to these drawbacks, adhesives commonly exhibit "creep" under constant loading, again contributing to possible structural deformations.

Aside from the mechanical strength mismatch between the adhesive and ribs, the corresponding CTE mismatch also has adverse effects on the response to thermal loads of the sandwich structure. The CTE of adhesives is typically greater than 25 microstrain per degree F, while that of the rib laminates is designed to be zero. Because of this mismatch, room temperature cure adhesives are commonly used to avoid thermal cure stresses at the joint locations. This does not, however, prevent the thermal stresses that will occur in certain space applications in which a structure may be exposed to temperature extremes anywhere from 250°F to -250°F. The resulting thermal stresses at the core joints can adversely affect the performance of the overall structure in three primary ways: (a) the through-the-thickness CTE of the sandwich structure can deviate, misaligning sensitive optics out of tolerance; (b) thermal cycling at the temperature extremes can eventually cause adhesive failure; and (c) uneven thermal loads at the adhesive joints can cause significant stress gradients within the core structure, causing non-uniform deformation in the structure.

The additional launch costs, due to increased weight, using a process that relies on adhesive, butt joint clips, etc., at the joints can be substantial for a large structure.

U.S. Patent No. 5,342,679 to Aochi et al. describes a method for making integrally formed discrete rib-cores that does not require cutting slots or gluing the ribs together. Aochi et al. discloses first wrapping fibers horizontally over pegs to form the desired rib structure, and then inserting mandrels wrapped with fibers oriented vertically into the spaces between the ribs. Matrix material is then poured into the spaces

between the mandrels and cured, and the fibers are cut off outside the desired rib structure. Both vertical and horizontal fibers are included in the final rib-core, however, a QI layup is not possible. The fiber content is also limited in the horizontal direction by the wrapping process to a very low percentage of the finished laminate. The fabrication method described by Aochi et al. is accordingly not applicable to highly stable optical bench sandwich structures.

Summary of the Invention

Accordingly, it is an object of the present invention to provide integrated discrete rib-cores suitable for optical bench sandwich structures, free from adhesives and cuts in the ribs.

It is a further object of the invention to provide a method for making integrated discrete rib-cores suitable for optical bench sandwich structures without need for cuts in the ribs and gluing of ribs.

It is another object of the present invention to provide a low cost method for making high quality integrated cores of both discrete rib design and honeycomb design.

It is a still further object of the present invention to provide a method for making integrated core and face sheet sandwich structures with quasi-isotropic properties and near zero coefficient of thermal expansion (CTE).

It is a still another object of the present invention to provide a simple and reliable method for making high strength light weight composite cores and sandwich structures without need for highly skilled workers.

These and other objects are achieved by a composite sandwich structure comprising a plurality of interconnecting ribs separated by

voids, each of the voids being surrounded by a substantially continuous wall of composite fiber reinforced material, and each of said ribs consisting of composite fiber reinforced material from the walls of two adjoining voids.

These and other objects are further achieved by a method for making such a sandwich structure comprising the steps of providing a plurality of tooling blocks having cross sections fitting together like tiles, providing prepreg laminate material, applying prepreg material around the sides of each of the tooling blocks, arranging the tooling blocks with prepreg laminate material applied in lateral contact to form a tooling block assembly, curing the prepreg material in the tooling block assembly to form a composite material, and removing the tooling blocks from the cured composite material.

Brief Description of the Drawings

The present invention and the objects achieved by it will be understood from the description herein, with reference to the accompanying drawings, in which:

FIG. 1 is a top view of an eggcrate rib-core according to the invention.

FIG. 2 is an enlarged top view of a point where ribs meet in the eggcrate rib-core of FIG. 1.

FIG. 3 is an enlarged vertical section through a rib in the eggcrate rib-core of FIG. 1 as indicated in FIG. 2.

FIG. 4 is an enlarged vertical section diagonally through a corner between ribs in the eggcrate rib-core of FIG. 1 as indicated in FIG. 2.

FIG. 5 is a top view of an assembly of parts for making an eggcrate rib-core according to the invention.

FIG. 6 is a top view of a tooling block wrapped with prepreg material with a butt joint.

FIG. 7 is an enlarged partial top view of an alternative end-to-end joint for a strip of multi-layer prepreg material wrapped around a tooling block.

FIG. 8 is a top view of a jig for use with the assembly shown in FIG. 5 with one tooling block in place.

FIG. 9 is a top view of honeycomb cores according to the invention.

FIG. 10 is a top view of honeycomb cores according to the invention.

FIG. 11 is a lateral view of a tooling block wrapped by prepreg material forming tabs on the top of the tooling block.

FIG. 12 is a top view of a tooling block wrapped by prepreg material forming tabs on the top of the tooling block.

FIG. 13 is a lateral view of an assembly as illustrated in FIG. 5 with tooling blocks wrapped with prepreg material as shown in FIGS. 11 and 12.

FIG. 14 is a lateral view of a tooling block for an eggcrate rib-core wrapped with two strips of prepreg material crossing at the top and draped over opposed sides of the tooling block.

FIG. 15 is a lateral view of an assembly as shown in FIG. 5 with tooling blocks wrapped with prepreg material as shown in FIG. 14, plus a top caul plate.

FIG. 16 is a schematic top view of an assembly of tooling blocks wrapped with multi layer prepreg material as shown in FIG. 14, with preferred orientations of the prepreg material indicated.

FIG. 17 is a perspective view of a tooling block assembly as shown in FIG. 16 indicating details of preferred orientations of prepreg

layers.

Detailed Description of the Preferred Embodiments

FIG. 1 shows a top view of a discrete ("eggcrate") rib-core 10 according to the present invention. The core 10 looks like a conventional eggcrate structure with nine square voids. For purposes of explanation only, three square voids 14, 14' and 14'' are described herein. The voids 14, 14', and 14'' are separated by ribs 12 and 12', but the ribs 12 and 12' do not intersect where they meet at corner 13. Instead, each void 14, 14', and 14'' is enclosed by continuous laminate walls 15, 16, and 17 of composite material. The adjoining wall sections of the continuous walls 15, 16 and 17 are co-cured to form a rigid assembly of composite ribs 12 and 12'.

Details of the construction of a core 10 according to the present invention are shown in FIGS. 2 - 4. FIG. 2 is an enlarged top view of one corner 13 in the rib-core 10. FIGS. 3 - 4 are, respectively, an enlarged vertical section through a rib 12, and a vertical section diagonally through the corner 13, as indicated in FIG. 2. The internal rib 12 is formed by adjoining wall sections 15 and 16. The adjacent internal rib 12' is formed by adjoining wall sections 16 and 17. The two ribs 12, 12' meet at the corner 13, but the laminate walls 15, 16, 17 in the two ribs 12, 12' do not intersect. The laminate walls 15, 16, 17 are instead bent sharply around the corners of voids 14, 14', 14'' so they barely touch each other tangentially at the center of corner 13, as indicated in FIG. 4. The space between corners of the laminate walls 15, 16, 17 will be filled with matrix material when the laminate walls 15, 16, 17 are cured to form the ribs 12, 12'. Each of two adjoining laminate walls (e.g. 15, 16 or 16, 17) contribute half of the total laminate in each internal rib (e.g. 12, 12'), as indicated in

FIG. 3. After curing the two halves form one single, integrated composite rib 12.

Around the periphery of the core 10 the voids 14, 14' do not adjoin any other voids, so there will only be one single laminate wall (e.g. 15, 17). Extra strips of laminate material can, however, be added along the outer periphery to contribute the missing half of the laminate in these ribs, as will be described below.

The composite core 10 may be designed from various fiber/resin types, layups (including QI), and thicknesses to provide the required mechanical and/or physical properties in the core 10. Preferably, the only materials used in the core 10 are the design-specified fiber and resin. No adhesives or other add-on material are used.

The dimensions of the core 10 may be extended in either or both directions by simply including more composite unit modules. The functional use and application of the core 10 is identical to those presently used in the art.

FIG. 5 is a diagram showing a preferred method for making an eggcrate rib-core 10 according to the present invention. Nine tooling blocks (for brevity the discussion will be limited to three tooling blocks 40, 40', 40'') with square cross sections, are each wrapped with strips 50 of prepreg material, so a continuous wall of prepreg material is formed around each tooling block 40, 40', 40''. The tooling blocks 40, 40', 40'' are slightly higher than the desired height of the core ribs 12, and their vertical corner edges are slightly rounded. The edge radius is determined by the drape characteristics for the specific fiber/resin combination used in the process, and may be as large as 1/16 inch.

The prepreg material used in the strips 50 is the same as that used by prior art. It may be unidirectional prepreg tape, or woven fabric, or tow, depending on the properties required. In all cases a sufficient degree of

resin tack is required to ensure that the pre-cured laminate's fiber orientation and alignment will not shift during handling in the processing prior to cure.

In a conventional quasi-isotropic eggcrate rib-core 10, the prepreg material for the ribs are cut from a flat laminate panel, which is laid up ply by ply to form a quasi-isotropic laminate after debulking (using a hot iron or vacuum bag) and curing. A typical layup for the prior art would consist of 8 plys oriented at angles [0, 45, 90, -45, -45, 90, 45, 0], but other ply orientations may be used for different combinations of fiber and matrix material. In either case it is preferable to avoid having plys with 90 degree orientation difference in direct contact, because this may cause high local stresses in the cured material during thermal cycling. Ideally the layup should be symmetrical about the middle.

For a core 10 having 8 ply quasiisotropic ribs 12, each prepreg strip 50 should, however, be only four ply thick, because the finished ribs 12 will consist of two co-cured laminate halves. A pre-cured 4-ply panel is evenly cut into strips 50 with width in slight excess of the final core height required. Strips 50 are then wrapped around the perimeters of the tooling blocks 40, 40', 40'' with ends meeting at a butt joint 52 at one side of each tooling block as shown in FIG. 6.

FIG. 7 is a diagram showing an alternate method for joining the ends of the prepreg strips 50 wrapped around each tooling block 40, 40', 40''. Generally, a plurality of ply drop-offs 501, 502, 503, 504 are created when laying up the prepreg panel. When cut into strips and wrapped around the blocks, the ply dropoffs 501, 502, 503, 504 from one end will exactly overlap the other end, leaving no apparent seam. This approach is structurally better for load transfer.

If debulking is required to make the laminate strips 50 conform closely to the perimeter of the tooling blocks 40, 40', 40'', shrink tape is

wrapped around the prepreg strips 50, heat is applied, and the shrink tape is removed before further processing. Additional prepreg strips 50' are laid along the outer edges of the assembly of wrapped tooling blocks 40, 40', 40'' to provide outer halves of the peripheral ribs.

To facilitate consolidation of the prepreg strips 50, 50' between the tooling blocks 40 and along the sides, hand pressure is first applied to force each of the four corner tooling block 40 and the four side tooling blocks 40' toward the center tooling block 40''. This is followed by application of shrink tape along the outside perimeter of the tooling block assembly and heating of the shrink tape.

Four caul plates 45 are placed along the edges, and the resulting assembly is ready to be prepared for conventional autoclave cure processing, using similar materials and procedures as in the prior art. During processing, the tooling blocks 40, 40', 40'', will conduct cure temperature heat uniformly to all parts of the laminate 50, 50'. At the same time, under autoclave pressure, the corner blocks 40 and side blocks 40' move toward the center block 40'' and apply uniform consolidating pressure to all walls of the laminate.

In order to ensure that all ribs 12 are parallel and of equal thickness, it is important to maintain symmetry between the individual tooling blocks 40, 40', 40'' in the tooling block assembly during curing under autoclave pressure. Such symmetry can be assured by guiding the individual tooling blocks 40, 40', 40'' in a curing jig. FIG. 8 is a top view of a curing jig 30 for a nine cell eggcrate rib-core, with one tooling block 40 shown in position. The curing jig 30 comprises a tool base 32 of metal, or any alternate material capable of withstanding process temperatures while maintaining rigidity and flatness. Within the tool base 32 are symmetrically oriented machined slots 34, 36 and holes 38, designed to mate with dowels or slide-tabs at the bottom of each tooling blocks 40. The ends of each of

the tool base 32 slots 34, 36 are rounded to facilitate machining.

For a nine cell rib-core 10 there will be nine tooling blocks 40. One tooling block is fitted with bottom dowel pins mating with holes 38 for placement stationary in the center of the tool base 32. Four of the tooling blocks 40 are corner blocks (one shown in position) having bottom slide-tabs 406 oriented along the diagonal as shown in FIG. 8. The remaining four tooling blocks are side blocks, for example block 40' in FIG. 5, having bottom slide-tabs oriented along the center of the blocks. The ends of the bottom slide-tabs are rounded to prevent the ends from being caught up on the sides of slots 34, 36.

The bottom slide-tabs for the side blocks and the corner blocks, for example block 40, are shorter in length than the corresponding slots 34, 36 in the tooling base 32, and they also are slightly narrower than the slots 34, 36. This allows the side blocks and corner blocks to move back and forth when inserted in the tool base 32 slots 34, 36. The tool base 32 slots 34, 36 are oriented toward the center and are of a sufficient length to allow all the movable corner and side blocks to slide with minimal friction toward the stationary center, for example block 40'' in FIG. 5, when their bottom tabs are inserted into the respective tool base 32 slots 34, 36.

The thickness of the ribs 12 (in FIG. 1) are determined by the thickness of the prepreg material, the autoclave pressure during curing, and the slot geometry of the curing jig 30. By positioning appropriate tooling stops at the center end of the slots 34, 36 to limit the travel of the blocks, a fixed rib 12 thickness can be assured, regardless of autoclave pressure. The side and corner tooling blocks (i.e., blocks 40, 40') must be able to approach the center block (i.e., block 40'') to a distance not exceeding the required maximum core rib 12 thickness. For greater process flexibility, the slot dimensioning should enable the side and corner blocks to slide far enough toward the center to just touch the center block before prepreg

strips 50 (see FIG. 5) are added.

Four caul plates 45, as shown in FIG. 5 are cut strips of sheet metal placed along the outer edges of the tooling block assembly during processing. The specific dimensions of the tooling are arbitrary and depend upon the required dimensions of the finished eggcrate rib-core 10.

After processing, the tooling blocks 40, 40', 40'' are removed, and the top and bottom faces of the core 10 are conventionally trimmed. The resulting structure represents a composite co-cure modular eggcrate rib-core. Two laminate face sheets can now be secondarily bonded to the core 10 by any method used in the prior art.

In order to obtain quasi-isotropic ribs 12 from the tooling block 40, 40', 40'' assembly as shown in FIG. 5, the layup must be arranged to take into account the fact that layups on any two adjacent tooling blocks are flipped around the vertical, so 45 degree ply orientations change signs. If each tooling block 40, 40', 40'' were wrapped with a 4-ply layup with orientations [0,45,90,-45], the finished laminate between each pair of tooling blocks would, accordingly, be oriented [0,45,90,-45,45,90,-45,0], and the [-45, 45] degree orientations in the central layers would cause an undesirable 90 degree transition between these two layers. This can be avoided by instead wrapping all tooling blocks 40, 40', 40'' and the perimeter of the tooling block assembly with 4-ply layups with orientations [45,0,-45,90], and arranging the 45 degree layers in contact with the tooling block surfaces. All center plys would then have the same 90 degree orientation.

Alternatively, the central tooling block 40'' and all four corner blocks 40 can be wrapped with 4-ply layup strips oriented [0,45,90,-45], while the side tooling blocks 40' are wrapped with 4-ply layup strips oriented [0,-45,90,45]. After assembly, all the internal ribs would then have [0,45,90,-45,-45,90,45,0] layer orientations, forming the same balanced, symmetric,

8-ply laminate as in a conventional rib layup. If the outer strips 50' are also 4-ply strips with layup orientations [0,-45,90,45], the ribs at the outer perimeter of the corner blocks 40 will also have the desired [0,45,90,-45,-45,90,45,0] layup. The four outer ribs at the side blocks 40' will, however, have [45,-45] orientations in their center layers. In most applications this is acceptable, because any effects of partial residual stresses imparted by the unsymmetric alternating ribs, which comprise the perimeter, would be isolated at the edges. This is expected to contribute a negligible effect on the overall dimensional stability of the sandwich structure. Alternatively, the design can allow the perimeter ribs at the corner blocks 40 and the side block ribs 40' to be removed following cure. The inclusion of outer ribs to form a core perimeter is a necessary result of the process, but is not necessary to the design intent for dimensional stability and strength.

The present invention may be extended from cores 10 to composite sandwich structures. FIGS. 11 - 13 illustrate a preferred method for making a core 10 with a single co-cured face sheet 60. The second core face is prepared for secondary bonding of a second face sheet by conventional methods.

This method uses the same tooling blocks 40, 40', 40'' and curing jig 30 as described with reference to FIGS. 5 and 8, but in this case the laminate strips 50'' are cut to a width in excess of the height of the tooling blocks. The excess width of the laminate strips 50'' is arranged to extend beyond the top of each tooling block 40, 40', 40'' as illustrated in FIG. 11, and is cut to form core tabs 53. The core tabs 53 are pressed down to lie flat on top of each tooling block, as illustrated in FIG. 12.

All the nine wrapped tooling blocks 40, 40', 40'' are placed on the curing jig 30, and strips of prepreg material 50' with width equal to the height of the tooling blocks 40, 40', 40'' plus tabs 53 are added to the periphery of the tooling block assembly. The tooling block assembly is then

compacted and debulked as previously described. A pre-cured (or uncured) face sheet 60 may now be positioned over the core tab 53 surfaces, and caul plates 45 and 46 added. The entire assembly is finally bagged for autoclave curing.

The ribs 12 between and around the tooling blocks 40, 40', 40'' will be co-cured as previously described, and at the same time the prepreg laminate 60 on top of the tooling block assembly will co-cure with the core tabs 53 on top of the tooling blocks to form an integral co-cured face panel for the sandwich structure. In the process, autoclave pressure acts to consolidate the core ribs 12, through the tooling blocks 40, 40', 40''. At the same time the autoclave pressure acts to apply equal pressure to the face sheet 60 and core tab 53 interface. The core tabs 53 provide a large contact area for the face panel 60. After curing, the tooling blocks 40, 40', 40'' are removed from the sandwich structure.

In some cases it is preferable to cure the core 10 with core tabs 53 on top of the tooling blocks 40, 40', 40'' separately, and add the face panel 60 in a separate process. After curing of the core 10 with core tabs 53, the pre-cured (or uncured) face panel 60 may be positioned over adhesive strips placed on the core tab 53 surfaces. The complete assembly is now prepared for conventional autoclave cure, with equal pressure applied to the interface between the face sheet 60 and the adhesive covered core tabs 53. The core tabs 53 provide a large contact area for the adhesive for the face panel 60, and the adhesive film provides precision mounting of the face panel 60 on the core 10.

The method described above for providing core tabs 53 on top of the tooling blocks can also be extended to provide core tabs 53 on both the top and the bottom of tooling blocks. In this case, the width of the laminate strip 50'' is evenly distributed on both sides of the tooling block (40, 40', 40'') as the laminate strip 50'' is wrapped around it. The corners of the

excess strip width on both sides of the tooling block are then cut to enable the excess to fold onto both the top and the bottom surfaces of the tooling block. This produces four folded core tabs 53 on the top and four similar folded core tabs 53 on the bottom of each tooling block 40, 40', 40''. After curing of the core 10 with core tabs 53 (with or without co-curing a top face panel), cured core tabs 53 will also be formed between the bottom surfaces of the tooling blocks 40, 40', 40'' and the base plate 32 of the curing jig 30.

When core tabs 53 have been formed on the bottom side of the core for secondary bonding of a bottom face sheet, the tooling blocks 40, 40', 40'' must be made from wash-out (eutectic salt) or melt-out (low temperature melt alloy) materials, or any other material that can be removed from the core interior after the cure process.

The process described above may also be extended to co-curing of two face sheets, thereby eliminating the secondary bonding step for the second face sheet. The layup and processing is similar to that discussed above with reference to FIGS. 11 - 13, except that the tooling blocks 40, 40', 40'' will remain inside the completed sandwich structure. For purposes of weight savings, it is preferable that the tooling block 40 material be made from commercially available structural foam. The laminate layup and top and bottom core tabs 53 are formed as described with reference to FIGS. 11 - 13 above.

Since both sides of the core assembly are co-cured to a laminate face sheets, the tooling blocks 40, 40', 40'' have no slot-tabs and are not placed on a curing jig 30. Instead, to facilitate assembly and alignment, the tooling blocks are placed, one at a time, in an assembly frame (not shown). The assembly frame should be adjustable and calibrated in both x and y directions. It may be adjusted along vernier scales to fix the alignment and the required length and width of the tooling block assembly.

After the core is assembled and aligned, the frame is released. The tack of the material holds the assembly in place. Debulking procedures are then followed using shrink tape, and the side laminate strips are positioned, followed by a second debulk. The assembly frame is again positioned around the assembly for subsequent transport. Enough pressure can be applied to the tool block assembly from the assembly frame walls to enable the assembly to be picked up and maneuvered without movement occurring among the tooling blocks.

Adhesive strips are positioned along the core tabs (53), and the first face sheet is placed on the core/tooling block assembly. The assembly is then turned over and the process is repeated on the other side for the second face sheet. The assembly is then prepared for conventional autoclave cure. In the process, equal pressure will be applied to the top and bottom face-sheetadhesive-core-tab interfaces as well as to the core walls through the structural foam tooling blocks. Here, the matrix resin itself acts as a lubricant to enable the tooling blocks 40, 40', 40'' surfaces to slide on the face sheet surfaces toward the center, facilitating rib compaction. The completed structure comprises the core, two face sheets, and the incorporated foam tooling blocks.

An alternative method for making a core with one co-cured face sheet will be described with reference to FIGS. 14 - 17. The same tooling blocks 40, 40', 40'' and curing jig 30 as described with reference to FIGS. 5, 8, and 13 are used, but the tooling blocks 40, 40', 40'' are not wrapped horizontally with prepreg strips in this case. Instead, two laminate strips 54 and 55 are draped crosswise over the top and down opposite sides of each tooling block 40, 40', 40''. The wrapped tooling blocks are placed on the curing jig 30 with side strips 50' of prepreg added, and the assembly is debulked. After co-curing and removal of the tooling blocks (40, 40', 40''),

ribs 12, as in FIG. 1, are formed between pairs of voids 14, 14', 14'', and a face sheet is formed on top of each void 14, 14', 14'. The face sheet may have shallow valleys above the ribs 12, but a strong and rigid sandwich structure has been formed in one curing step.

There will be no continuous fibers extending around the corners between the voids 14, 14', 14'' but the corners 13 will be filled with matrix material, and the ribs 12 provide vertical and lateral stability to the sandwich structure. If extra fiber reinforcement is desired at corners 13, narrow strips of prepreg material may be arranged to cover the gaps between the prepreg strips 54, 55 before assembly of the wrapped tooling blocks.

FIG. 16 is a diagram showing the formulation of a quasi-isotropic structure with near zero CTE. For purposes of demonstration an 8-ply layup is used for the finished ribs, the top panel, and the edges of the finished structure. A representative structure is obtained by cutting P75/934 tape into single-ply strips with width equal to the width of the tooling blocks 40 and length equal to that of the sum of the top and two sides of the tooling blocks 40. Each strip has a specific fiber orientation, the total number of each is sufficient to produce one-half of the rib wall layup as [0,-45,90,45] ("A), and the other half as [-45,0,45,90] ("B"). One A-strip is draped over the top of each tooling block 40, 40' 40" and down along two opposite sides, and one B-strip is draped crosswise over the A-strip. This is followed in sequence by another A-strip, which is again crossed by the next sequential B-strip. The layup continues until the completed A and B layups are achieved. All the tooling blocks 40, 40', 40'' are then placed on the curing jig 30 with all A-strips parallel and all B-strips parallel as indicated in FIG. 16. Four additional strips are cut and fitted along the circumference of the tooling block assembly.

FIG. 17 is a diagram showing the preferred fiber orientations for the

quasi-isotropic structure shown in FIG. 16. Note that the fiber orientation in strips 54, 55 is referenced to the length dimension of the strips, but the orientations in FIG. 17 are referenced to the assembly, as shown. The final fiber orientations for all panels and ribs will be as indicated in FIG. 17, which means that all panels meet the strictest standard for quasi-isotropic and zero CTE lay-up. After debulking and curing, and removal of the tooling blocks, a true quasi-isotropic sandwich structure with a discrete rib-core and one integral face panel is obtained.

Alternatively, a window may be cut in the top plys on each tooling block 40, 40', 40'' so frame-like tabs are formed on top of each tooling block. A separate face panel with the same lay-up orientations as in the tabs can then be bonded to the tabs, either by co-curing, or by bonding with adhesive film strips.

The composite modular structures and processes described above with reference to eggcrate rib-core designs may be extended to other application in which ribs are separated by voids.

FIGS. 9 and 10 are top views of honeycomb cores. FIG. 9 shows a near circular core 10', and FIG. 10 shows a rectangular core 10''. In both cases, the central part of the cores (10', 10'') are built from laminate walls defining hexagonal voids 140. The outer parts of the cores 10', 10'' are filled out by laminate walls defining triangular voids 142, 144, 146 or trapezoid voids 148. All the voids fit together like tiles, so the walls of adjoining voids can form ribs 12.

The method for making cores 10', 10'' is exactly the same as described above for an eggcrate rib-core 10, except for the cross sections of the tooling blocks and obvious alterations in curing jigs or assembly frames. Tabs for bonding to face sheets may also be added as integral extensions of the ribs, as described above with reference to FIGS. 11 - 13. One or two face sheets may be co-cured with such tabs, exactly as

described above for eggcrate rib-cores with co-cured face sheets.

Structures composed of other fiber/resin materials and having other unit cell geometries or more complex shapes may be fabricated using the same principles, using corresponding tooling block designs. The principle of the invention is to form ribs by joining walls around tooling blocks, which replace the voids during a cocuring process and are removed after curing. This principle can be extended to any core design based on voids fitting together like tiles, and the ribs need not even be straight. For some complex shapes, washout or meltout tooling blocks may be required to enable removal of the tooling blocks after processing.

The co-cure modular eggcrate rib-core according to the invention has significantly improved strength, stiffness, and overall property uniformity compared to similar structures produced by prior art methods. Mechanical load distribution is more uniform, as are such physical properties as thermal expansion and conductivity.

There are no finite joint locations within a core according to the invention in which significant interfacial tension loads are carried by or transferred to a weak adhesive medium. Loads are carried by the superior tensile, compressive, and interlaminar shear properties of the laminate itself and transferred throughout the structure. This distribution serves to significantly reduce the load stresses, greatly improving the structure's strength attributes. In addition, unlike the case of adhesive failure in which load carrying ability is abruptly halted, the failure mode within the fiber/resin laminate occurs very gradually through interlaminar delamination, while still maintaining load carrying capability, because load energy is absorbed through crack initiation and extended growth. This is not possible in the conventional rib-core approach since the fibers are cut to create slots at the joints, thus relying on unreinforced adhesive to transfer all loads.

Since only fiber/resin material is used for the structure, its properties

are more uniform and can be more reliably predicted from design. Outside the basic fiber/resin material selected by design, there are no other materials to cause CTE mismatch and thermal stresses. Physical transport properties are more uniform within a uniform medium.

Secondarily bonded reinforcement materials, such as buttclips, used by prior art to improve the joint strength, are not required.

For the same property design requirements, the co-cure modular core obviously has less weight than the prior art rib-core design, because there are no adhesives or reinforcement clips.

The extension of this process to include co-cure of the face sheets onto tabs integral with the core (FIGS. 13, 15) significantly improves face-sheet-to-core interfacial strength and load distribution. This occurs since the core tabs formed in this process increase the effective bonding area at the face sheet/core interface. Compared to the secondary bonding of the face sheets to only the edge-width of the core laminate, there are strength advantages in bonding to a wider core area. In the case where an uncured face sheet laminate is co-cured with the core, no adhesive would be required. The absence of adhesive would promote greater uniformity in physical and mechanical properties (CTE, strength and stiffness) and would reduce the overall weight of the sandwich structure.

The present invention provides many process advantages over prior art processes for making composite cores and sandwich structures.

The present invention provides a co-cure process in which the fabrication of the composite core laminate and the assembly of the core structure are accomplished in unison. No secondary bonding using adhesive is required for the manufacture of a core, and no labor-intensive or costly procedures are required. All procedures facilitate easy working access for assembly. No bonding tools are needed for alignment, since alignment is inherent in and provided by the co-cure tooling.

No precision machining is required for assembly. There are no precision machined slots or ribs. There is no rework required, to ensure correct slot depth and alignment. The fabrication procedures are highly simplified, so the labor experience base may be quickly established or transitioned. The manufacturing process is highly controllable, so high quality can be easily established and maintained. Only a final trim of the core surfaces after fabrication is needed. This type of machining is conventionally applied to the surfaces of honeycomb cores. The one-time machining of the overall core surfaces is less prone to outside error tolerance compared to the repetitive machining of multiple ribs, which, when assembled together, would comprise the overall core surfaces according to the prior art.

No adhesive procurement, test qualification, inventory or storage is required. This again saves time, labor, and cost. Error tolerance stack-up is less than in the prior art approach. Fewer procedural steps means fewer procedural errors. Prior art problems with slot sizes, variation in adhesive composition and application, rib alignment variation, and adhesive residual stresses, are all avoided by the invention. The steps in the co-cure modular assembly according to the invention are much less prone to errors that would significantly affect the final properties than the prior art rib-core approach.

The process according to the invention is also more conducive to scale-up. For a larger structure the same tooling blocks and procedures are applied, except in more quantity. In contrast, the prior art rib-core approach requires extended machine precision for more ribs and slots, more application of paste adhesive, more intricate alignment mechanisms and verifications, all contributing to a greater error tolerance stack-up.

Manufacturing lead-time is also significantly reduced. Again, fewer steps, less likelihood for error and rework, co-cure fabrication and assembly,

less labor expertise required, all contribute to lessen the manufacturing lead-time.

Overall labor and material costs are significantly reduced.

The present invention also provides many benefits in the manufacture of co-cured face sheet/modular core structures. Except for minor face sheet edge-trim and resin flash removal, no machining is required at all. Secondary bonding of face sheets is reduced or eliminated. Lead-time, labor, re-work, materials, and total cost are all significantly reduced. Ready-to-use film adhesive rather than component-mix paste adhesive may be used. Film adhesive may be easily cut into strips and selectively placed on the core-tabs, so no unnecessary adhesive is applied. Film adhesives can not be used to bond face sheets to the edge-width of the core. A tedious, time-consuming application of paste adhesive to the core edges of both core sides is thus avoided.

Numerous modifications and adaptations of the present invention will be apparent to those skilled in the art. Thus, the following claims are intended to cover all such modifications and adaptations which fall within the true spirit and scope of the present invention.

COMPOSITE SANDWICH STRUCTURE AND METHOD FOR MAKING SAME

Abstract of the Disclosure

A core for a sandwich structures which has multi-ply laminate ribs separated by voids, is made as an integral unit in one single curing step. Tooling blocks corresponding to the voids are first wrapped by strips of prepreg layup equal to one half of each rib laminate so a continuous wall of prepreg material is formed around the tooling blocks. The wrapped tooling blocks are next pressed together laterally, like tiles, so adjoining walls from two tooling blocks are joined. The assembly is then cured by conventional methods, and afterwards the tooling blocks are removed so voids are formed. The ribs can be provided with integral tabs forming bonding areas for face sheets, and face sheets may be co-cured with the core ribs. The new core design is suitable for discrete ribcores used in space telescopes and reflector panels, where quasiisotropic properties and zero coefficient of thermal expansion are required.

FIG. 1

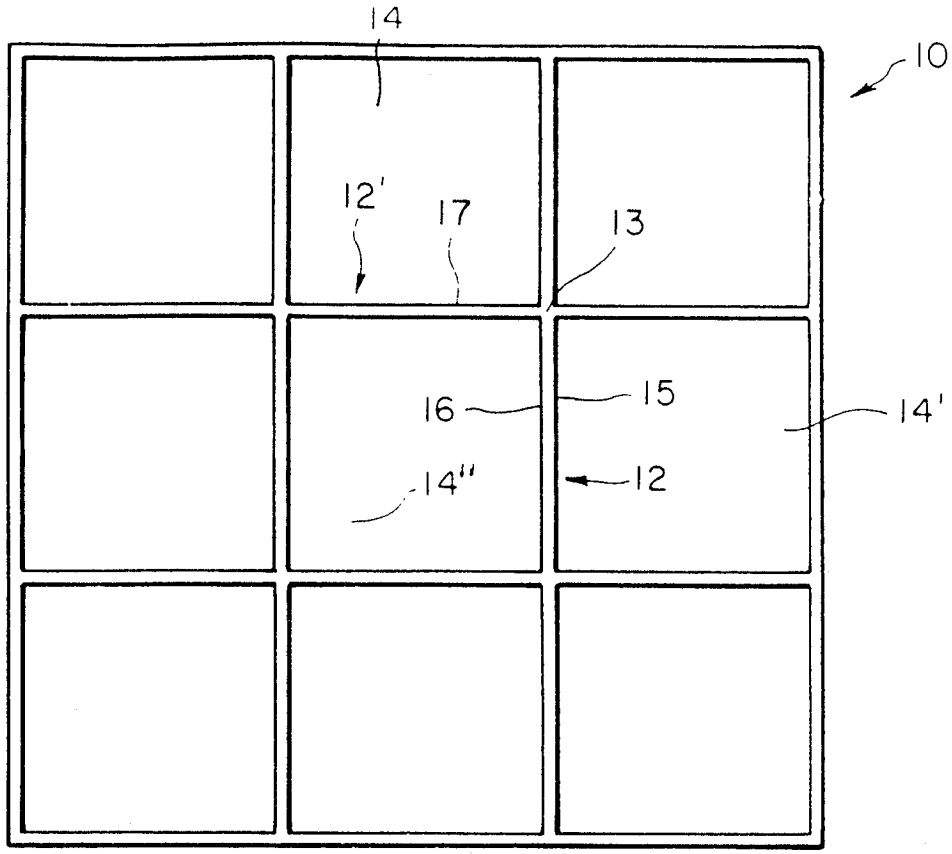

FIG. 2

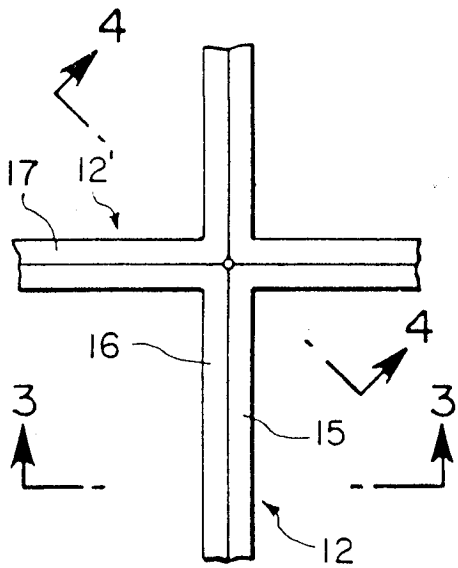

FIG. 3

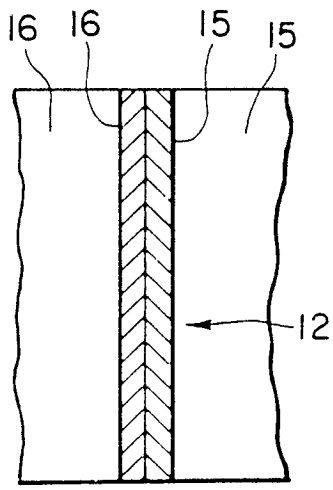

FIG. 4

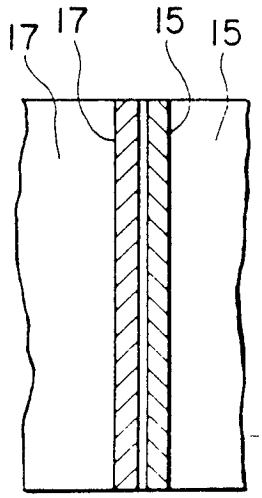

FIG. 5

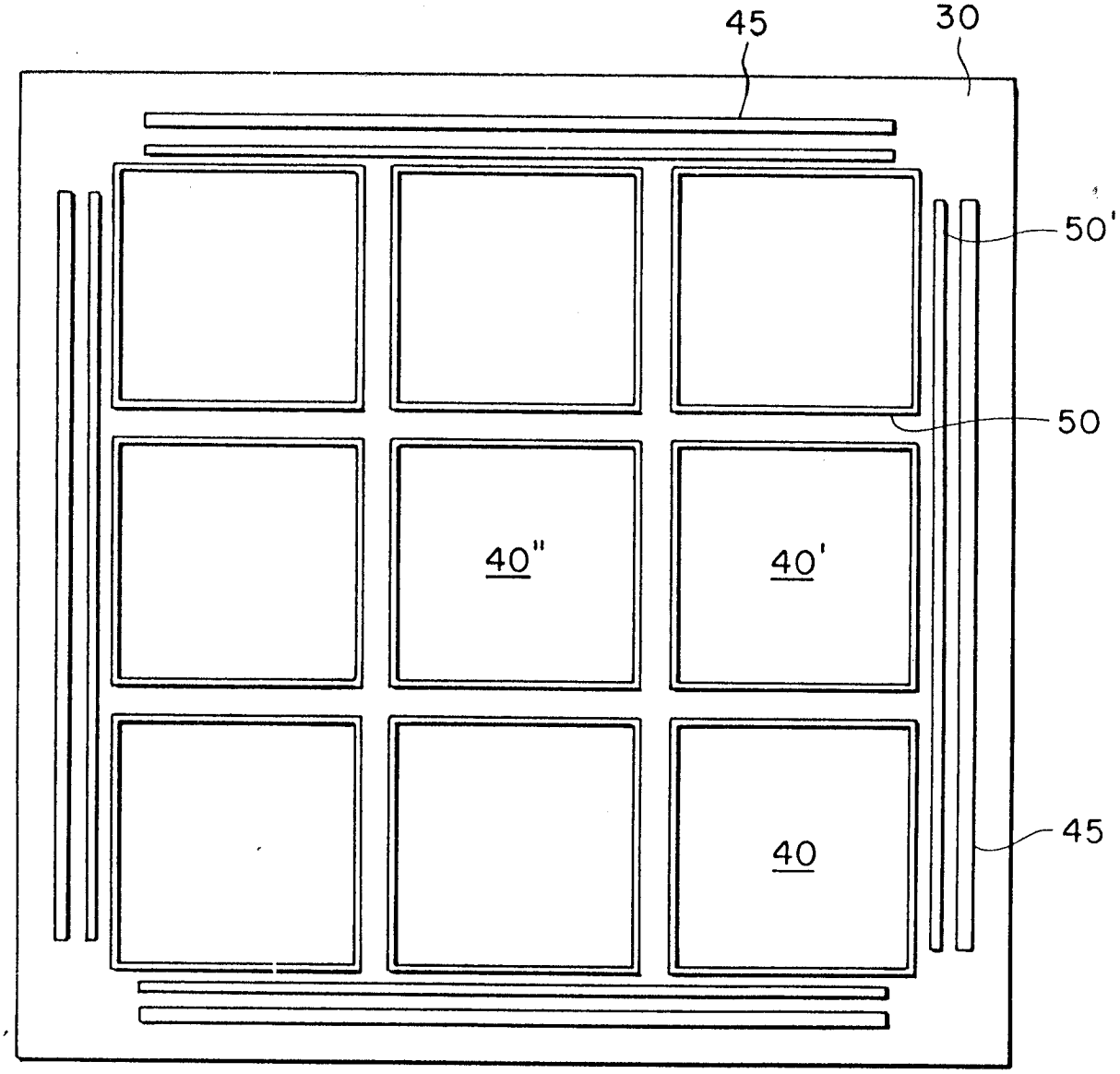

FIG. 6

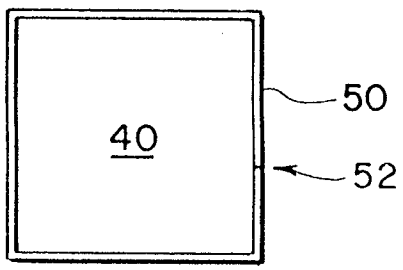

FIG. 7

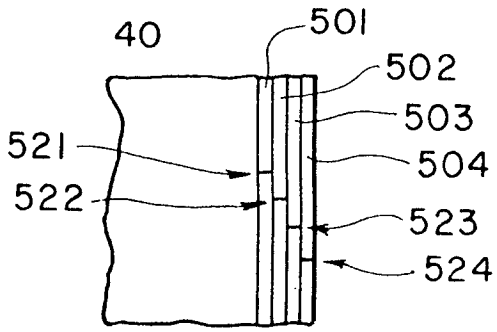

FIG. 8

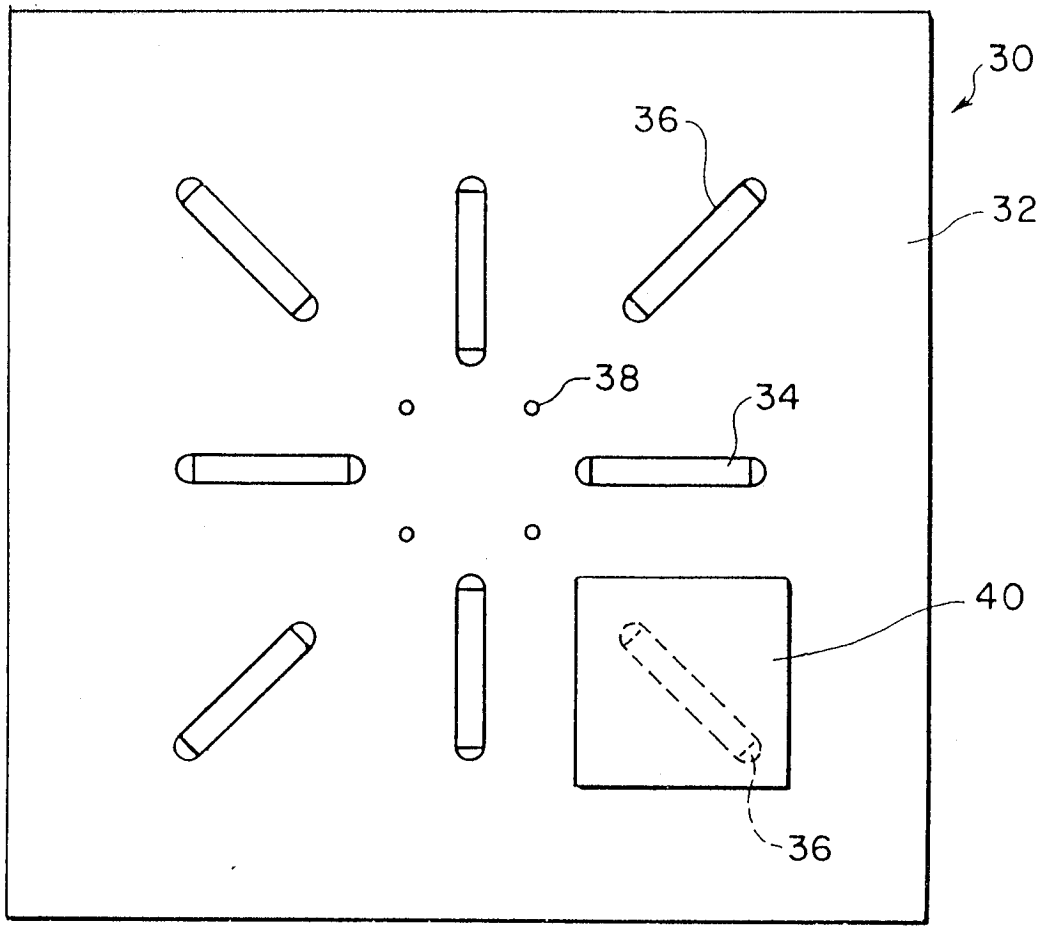

FIG. 9

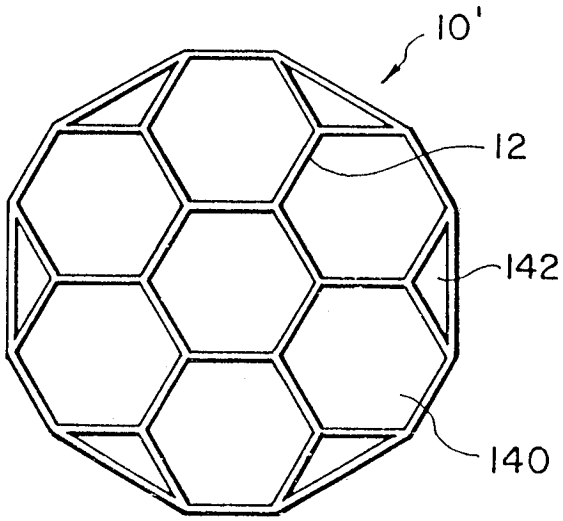

FIG. 10

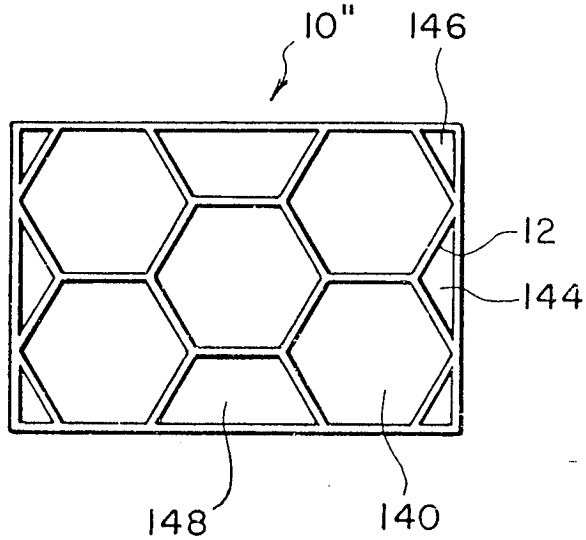

FIG. 11

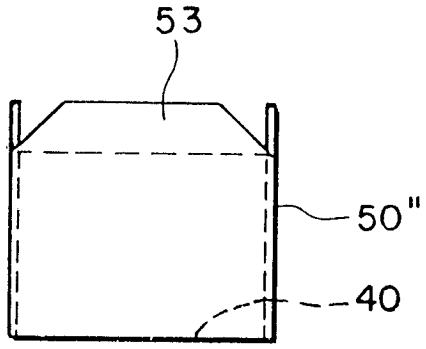

FIG. 12

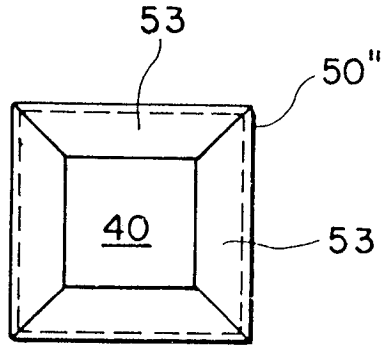

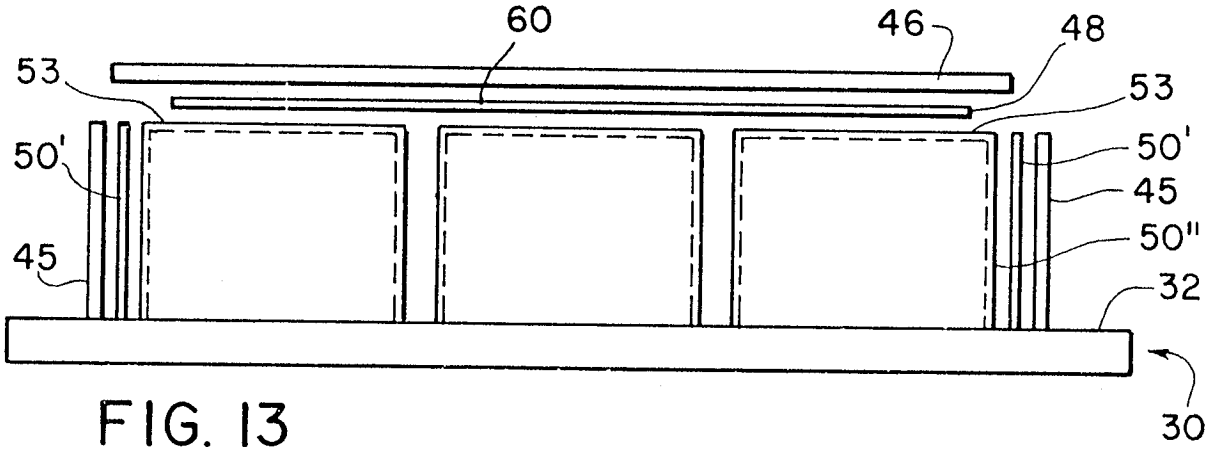

FIG. 13

FIG. 14

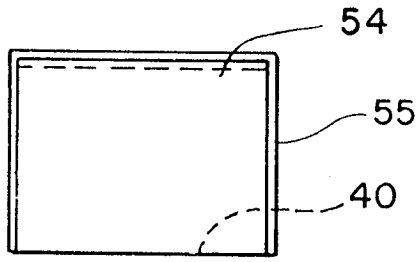

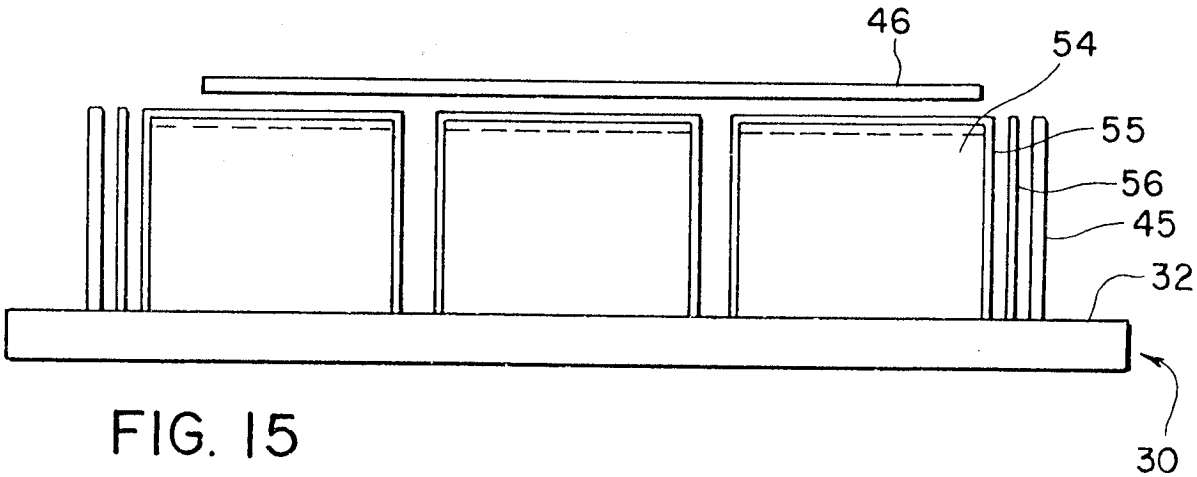

FIG. 15

FIG. 16

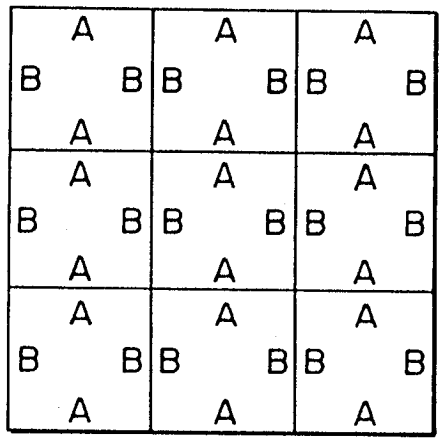
A
B B
A

FIG. 17

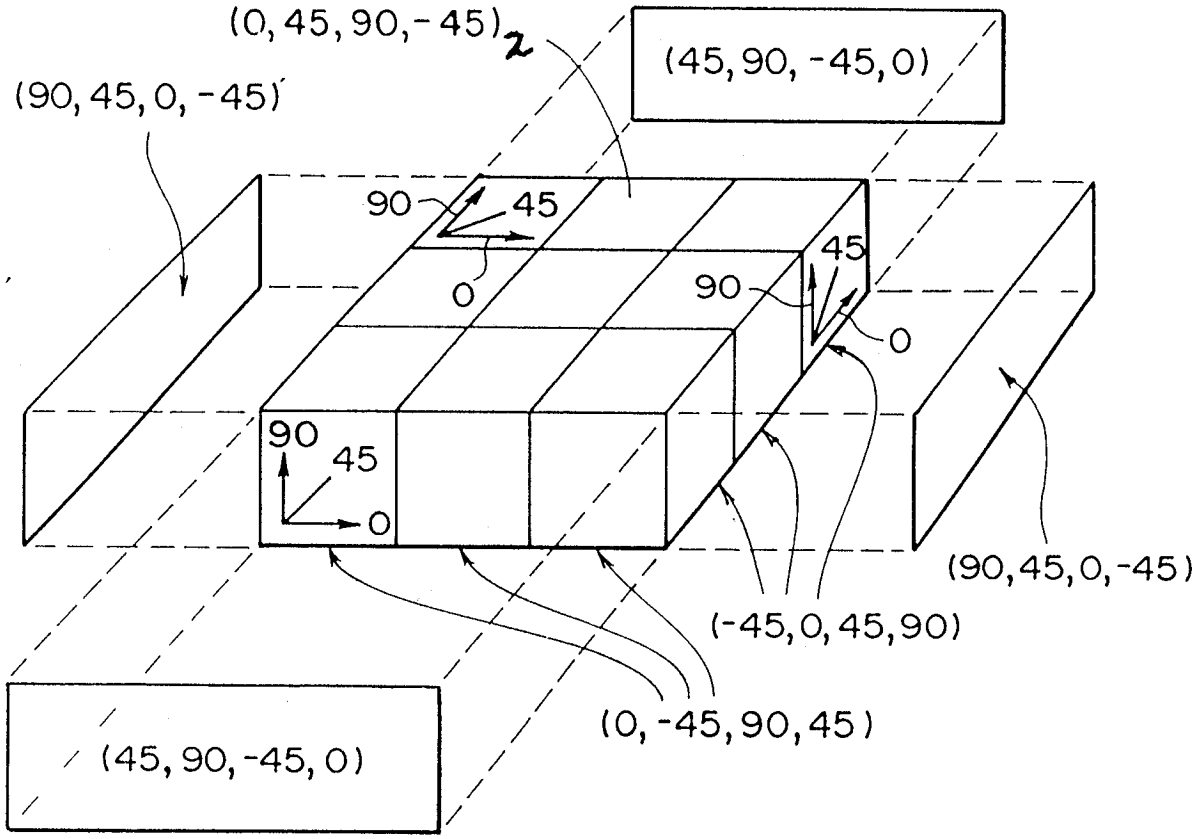
(0, 45, 90, -45)
2
(45, 90, -45, 0)
(90, 45, 0, -45)
90
45
0
90
45
0
90
45
0
(90, 45, 0, -45)
(-45, 0, 45, 90)
(0, -45, 90, 45)
(45, 90, -45, 0)