NASA CASE NO. LAR 15246-1

PRINT FIG. 2(a)-(b)

P13

NOTICE

The invention disclosed in this document resulted from research in aeronautical and space activities performed under programs of the National Aeronautics and Space Administration. The invention is owned by NASA and is, therefore, available for licensing in accordance with the NASA Patent Licensing Regulation (14 Code of Federal Regulations 1245.2).

To encourage commercial utilization of NASA-owned inventions, it is NASA policy to grant licenses to commercial concerns. Although NASA encourages nonexclusive licensing to promote competition and achieve the widest possible utilization, NASA will provide the necessary incentive to the licensee to achieve early practical application of the invention.

Address inquiries and all applications for license for this invention to **NASA Patent Counsel, Langley Research Center, Code 212, Hampton, Virginia 23681-0001.**

Serial No.: 08/327,061
10/19/94

LaRC

(NASA-Case-LAR-15246-1) BASE PASSIVE POROSITY FOR DRAG REDUCTION Patent Application (NASA. Langley Research Center) 13 p

N95-14183

Unclas

G3/37 0029848

BASE PASSIVE POROSITY FOR DRAG REDUCTION

The present invention relates generally to controlling the pressure load on ground vehicles, and more particularly to the passive control of drag on ground vehicles using porosity.

A device for controlling drag on a ground vehicle. The device consists of a porous skin mounted on the trailing surface of the ground vehicle. The porous skin may be separated from the vehicle surface by a distance of at least two times the Boundary layer formed on the surface. Alternately, the trailing surface of the ground vehicle may be porous. The device minimizes the strength of the separation in the base and wake regions of the ground vehicle, thus reducing drag.

Novel aspects of the present invention include reducing the drag on ground vehicles without adding and significant weight to the vehicle. This reduces fuel consumption and the effect large ground vehicles have on other vehicles.

Inventor:	Steven X. S. Bauer	Richard M. Wood
Address:	314 Brook Lane Yorktown, VA 23692 ss: [redacted]	700 Berkley Court Virginia Beach, VA 23452 ss: [redacted]
Employer:	NASA	NASA
Initial Evaluator:	James L. Dillon	

Serial No.: 08/327,061
Filed: 10/19/94

BASE PASSIVE POROSITY FOR DRAG REDUCTION

Origin of the Invention

The invention described herein was made by employees of the United States Government and may be used by and for the Government for governmental purposes without the payment of any royalties thereon or therefor.

Background of the Invention

1. Technical Field of the Invention

The present invention relates generally to controlling drag on ground vehicles, and more particularly to the passive control of drag on ground vehicles using porosity.

2. Discussion of the Related Art

Previous devices for controlling drag on ground vehicles have involved active devices which attempted to inhibit separation on the base to create a predetermined best situation. These devices consist of flaps, turning vanes, vortex generators, and a wide range of suction and blowing concepts which add considerable weight to the overall vehicle weight and increase fuel consumption.

It is accordingly an object of the present invention to control drag on ground vehicles.

It is another object of the present invention to achieve the foregoing objects with a passive device.

It is a further object of the present invention to achieve the foregoing objects with minimal spatial and mass requirements.

It is yet another object of the present invention to accomplish the foregoing objects in a simple manner.

Additional objects and advantages of the present invention are apparent from the drawings and specification which follow.

Summary of the Invention

According to the present invention, the foregoing and additional objects are obtained by providing a drag reduction device for use on a ground vehicle. This device consists of a porous outer skin having a thickness between about 1/16" (0.16 cm) and 1" (2.54 cm), preferably between 1/16" (0.16 cm) and 1/4" (0.635 cm), which is fixed to the trailing surface of the ground vehicle (i.e. the outer surface of the doors). The porous outer skin may be separated from the trailing surface of the ground vehicle by a distance equal to at least two times the thickness of the boundary layer formed on the surface of the ground vehicle (i.e. 0.25 inches (0.635 cm) or more). The surface porosity of the porous outer skin is between about 10 and 20%. The porous outer skin may be fabricated from a porous material or by creating a number of perforations in a solid material. If the perforation method is used, the maximum dimension of the perforations is about 0.025 inches (.0635 cm) on the sides and top of the ground vehicle and 0.25 inches (.635 cm) on the trailing surface of the ground vehicle. Alternatively, the trailing surface of the ground vehicle may be porous. Again the surface porosity should be between 10 and 20%. The porosity may be caused by perforating the ground vehicle's existing trailing surface and, depending on the thickness of the existing surface, the maximum dimension of the perforations is about 0.25 inches (.635 cm) for a trailing surface with a thickness of 1/2 inch (1.27 cm) or more.

Brief Description of the Drawings

Fig. 1 is a side view showing a porous skin mounted on the trailing surface of a ground vehicle;

Fig. 2a is a cross sectional view across line II-II of figure 1 for a ground vehicle having a porous skin separated from the trailing surface;

Fig. 2b is a cross sectional view across line II-II of figure 1 for a ground vehicle having a porous trailing surface;

Fig. 3 is a perspective view of the trailing end of the ground vehicle;

Fig. 4 is a side view showing the wake formed on a ground vehicle without a porous skin mounted on the trailing surface of a ground vehicle;

Fig. 5 is a graph showing drag characteristics of a ground vehicle having a porous skin and drag characteristics of a ground vehicle without a porous skin; and

Fig. 6 is a graph showing drag characteristics of a ground vehicle having a porous skin and drag characteristics of a ground vehicle without a porous skin.

Detailed Description of the Invention

Figure 1 shows a ground vehicle 12. A trailing surface 16 of the ground vehicle 12 is covered with a porous skin 14. The thickness of the porous outer skin 14 is between about 1/16" (0.16 cm) and 1" (2.54 cm), preferably between 1/16" (0.16 cm) and 1/4" (0.635 cm) and should be chosen based on structural requirements of the ground vehicle. The porosity of the porous skin 14 is optimally between 10 and 20%. The porous skin 14 may be made from a porous material, such as sintered metal, or from a solid material, such as steel or fiberglass, which has been perforated, however the maximum dimension of the perforations should be no more than about .025 inches (.0635 cm) on the sides 24 and top 22 of the ground vehicle and 0.25

inches (.635 cm) on the trailing surface 26 of the ground vehicle (as shown in fig. 3) in order to minimize the disturbance of the external flow field.

Figure 2a shows the porous skin 14 mounted on the trailing surface 16 of the ground vehicle, forming a plenum 20 between the porous skin 14 and the trailing surface 16. The porous skin 14 must be mounted over the plenum 20 such that there is minimal blockage in all directions. The depth of plenum 18 should be no less than about twice the thickness of the boundary layer formed on the surface of the ground vehicle in motion, generally about 0.25 inches (0.635 cm).

An alternate embodiment of the present invention is to adapt the existing trailing edge 16 of the ground vehicle 12 by, for example, perforating the rear doors of the ground vehicle as shown in figure 2b. The surface porosity should be between about 10 and 20% and the size of the perforations depends on the thickness of the doors or trailing surface. For doors having a thickness of 1/2 inch (1.27 cm) or more, the maximum dimension of the perforations is about 0.25 inches (.635 cm).

Figure 4 shows a ground vehicle without a porous skin attached. The wake 18 is larger and stronger than the wake 18 shown on figure 1.

This invention allows the flow over the ground vehicle 12 to turn around the corners at the base of the vehicle reducing the strength of the separation in the wake 18 of the vehicle. This allows the wake 18 to be shorter and reattachment of the flow in the wake 18 occurs sooner, reducing drag. This phenomenon occurs at all speeds with reductions in drag of 20% or more shown in wind tunnel tests.

Figure 5 shows a comparison of a tractor-trailer with a short cab and a porous skin mounted directly on the trailing surface of the cab and 10% forward of the trailing surface and a tractor-trailer with a short cab with no porous skins.

Figure 6 shows a comparison of a tractor-trailer with an extended cab and a porous skin mounted directly on the trailing surface of the cab and 5%

forward of the trailing surface and a tractor-trailer with an extended cab with no porous skins.

Many improvements, modifications, and additions will be apparent to the skilled artisan without departing from the spirit and scope of the present invention as described herein and defined in the following claims.

What is claimed is:

PASSIVE CONTROL OF PRESSURE LOADS USING POROSITY

Abstract of the Disclosure

A device for controlling drag on a ground vehicle. The device consists of a porous skin mounted on the trailing surface of the ground vehicle. The porous skin may be separated from the vehicle surface by a distance of at least two times the boundary layer formed on the surface. Alternately, the trailing surface of the ground vehicle may be porous. The device minimizes the strength of the separation in the base and wake regions of the ground vehicle, thus reducing drag.

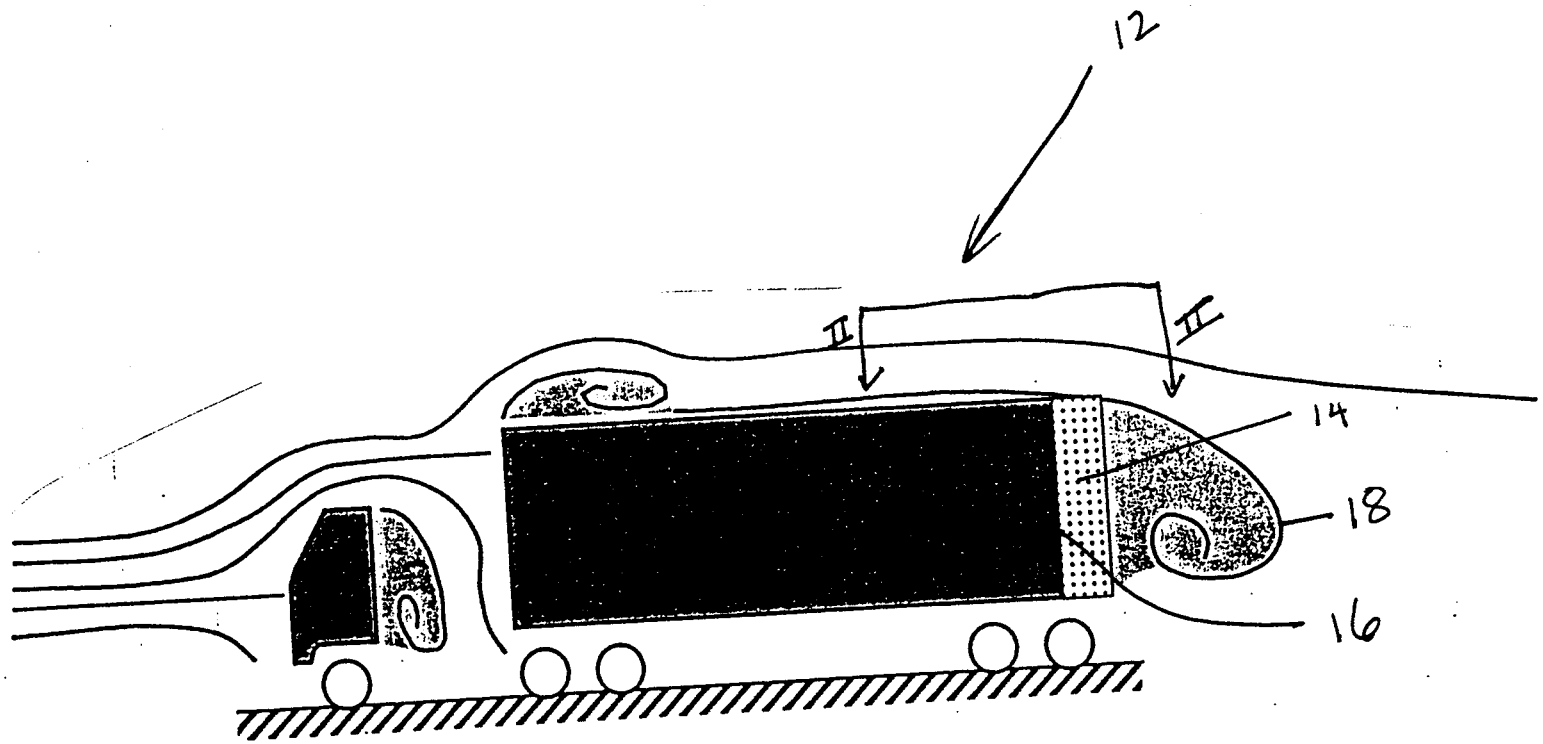

Fig 1

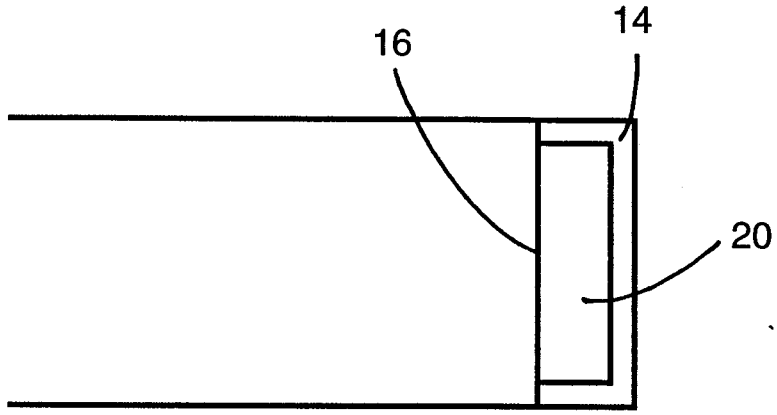

Fig. 2a

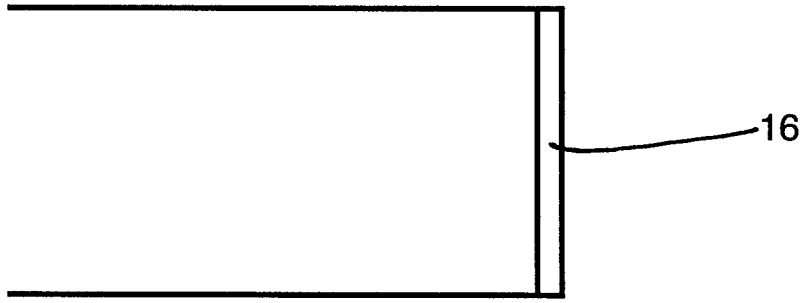

Fig. 2b

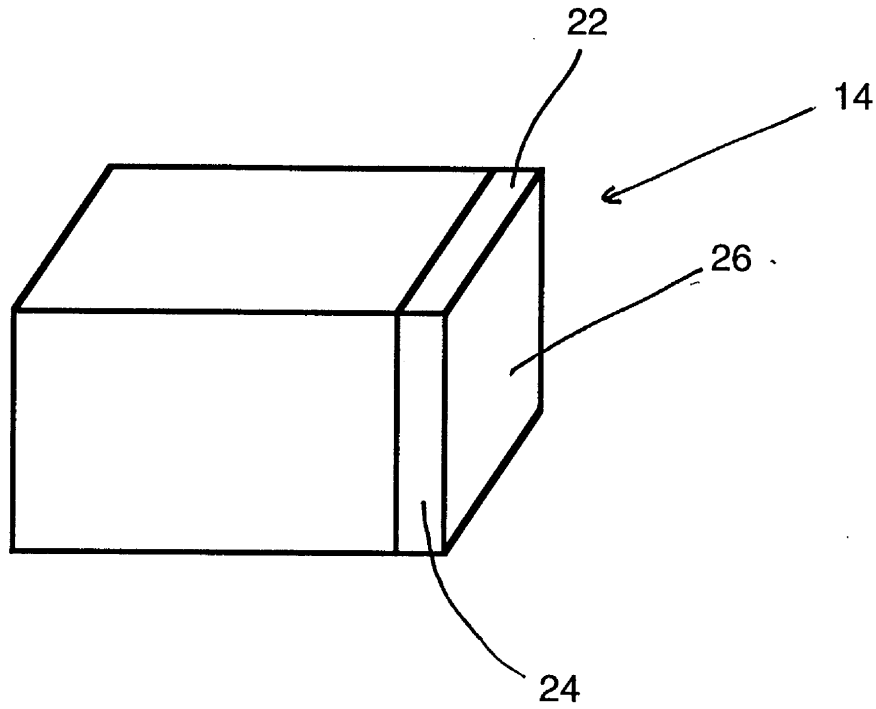

Fig. 3

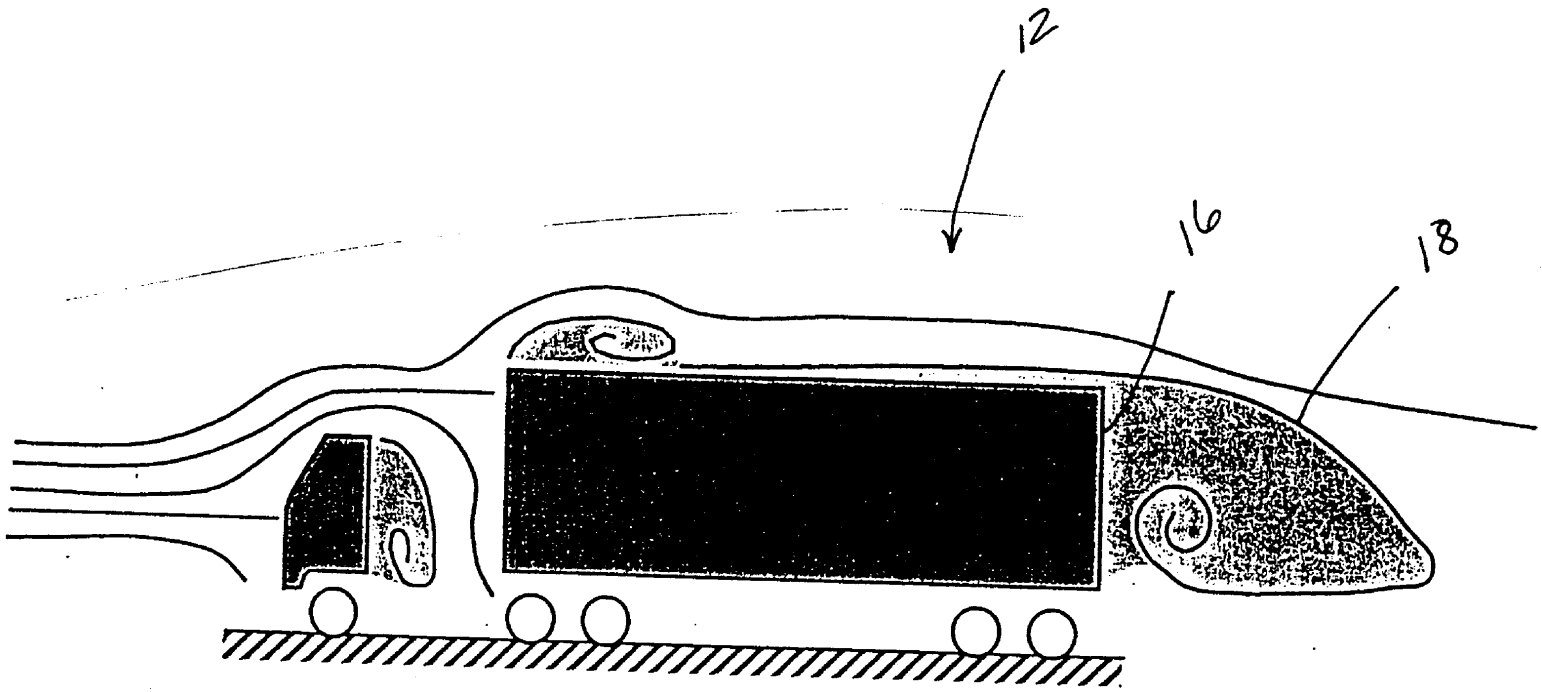

Fig. 4

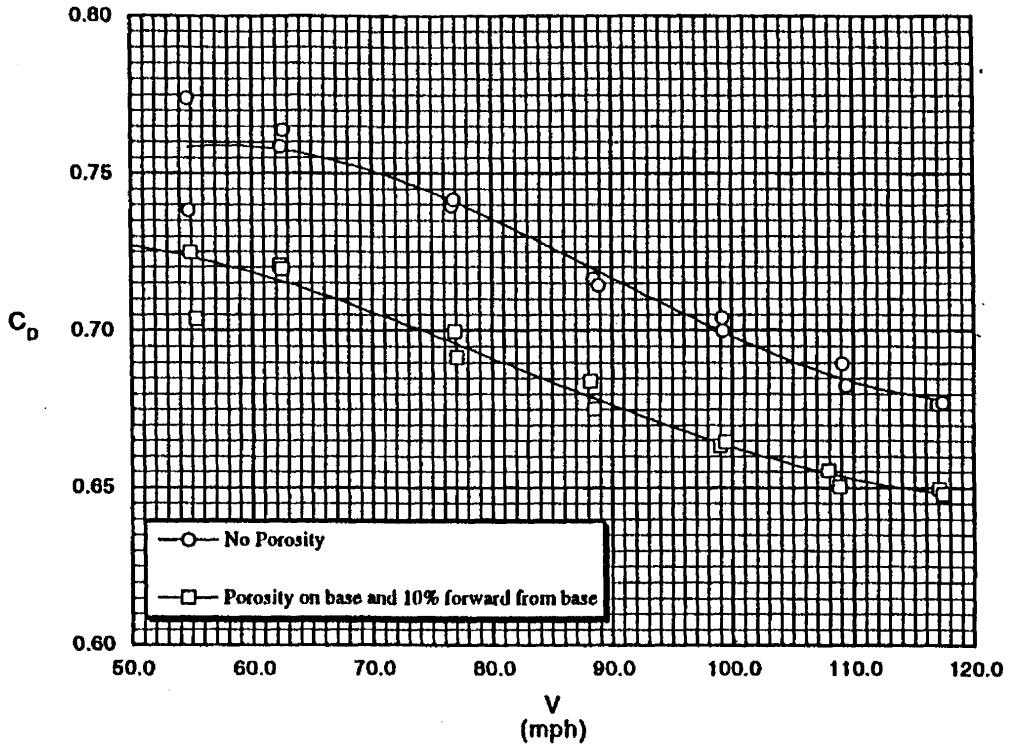
0.80
0.75
0.70
0.65
0.60
C_D
50.0
60.0
70.0
80.0
90.0
100.0
110.0
120.0
V
(mph)
No Porosity
Porosity on base and 10% forward from base

Fig. 5

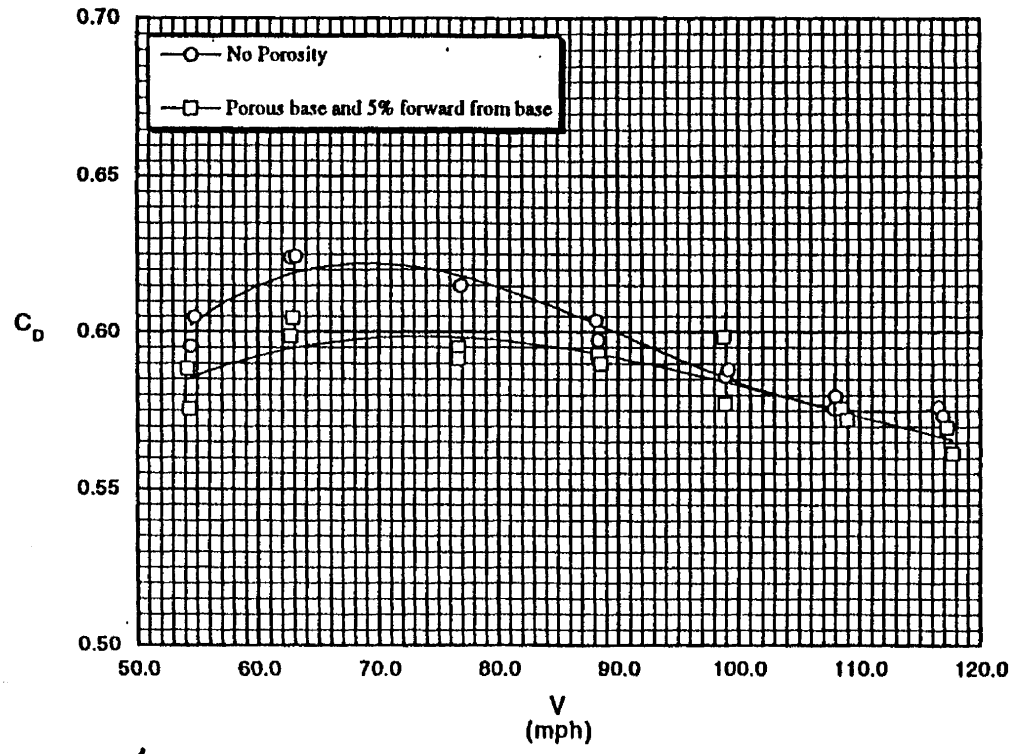
0.70
0.65
0.60
0.55
0.50
C_D
50.0
60.0
70.0
80.0
90.0
100.0
110.0
120.0
V
(mph)
No Porosity
Porous base and 5% forward from base

Fig. 6